Sellen

ZGF
ZIMMER GUNSUL FRASCA ARCHITECTS LLP

Appendix: Table of Contents

Form B: Acknowledgement of Receipt of RFP and Addendum 203
Form I: Honorarium Agreement 205
Heating, Cooling and Air Handling Equipment Cut Sheets 207
Elevator Analysis 241

CONFIDENTIAL RECORD

ACKNOWLEDGMENT OF
RECEIPT OF RFP AND/OR ADDENDUM

We hereby acknowledge our receipt of:

[*Proposer to circle and insert as applicable*]

RFP dated February 20, 2014, ~~2013~~

Addendum No. 1 dated Dec. 4, 2013, 2013 / 2014
2 Dec. 22, 2013
3 Dec. 17, 2013
4 Dec. 23, 2013
5 Dec. 23, 2013
6 Jan. 22, 2014
7 Jan. 29, 2014
8 Jan. 29, 2014
9 Feb. 14, 2014

for the Request for Proposal for the Design-Build project for the 1063 Block Replacement Project. We also acknowledge that the individual listed below is our single point of contact and that no communications regarding this solicitation or Project are allowed between any other individual, consultant or subcontractor and any Owner staff member or its designated representatives, other than as specifically allowed by the RFP. We understand that a breach of this condition may be grounds for disqualification of our Request for Proposal.

Signature: _____

Printed Name: Wilf Wainhouse

Date: February 20, 2014

Title: Chief Operations Officer

Representing: Sellen Construction

Address: 227 Westlake Avenue North

Seattle, WA 98109

Phone Number: 206.682.7770

Fax: 206.623.5206

Email: wilf.wainhouse@sellen.com

Please scan this document and email immediately upon receipt to the attention of:

Richard Browning, Project Director, 1063 Block Replacement
richard.browning@DES.wa.gov

Proposal Stage Memorandum of Understanding

This Proposal Stage Memorandum of Understanding is between the State of Washington Department of Enterprise Services (hereinafter "DES") and the design-build competition finalist named Sellen | ZGF Design-Build Team (hereinafter "Candidate").

Having previously reviewed qualifications presented by the Candidate, DES hereby agrees to review and consider the Candidate's future proposal to design and build a new office building, to be named the 1063 Block Replacement, so long as that proposal is presented in accordance with the requirements listed in the Request for Proposal (RFP) document prepared by DES and already now reviewed by the Candidate.

The Candidate hereby attests that it has had ample opportunity to review DES's RFP document and the Candidate is now committed to fully and completely respond to it by the deadline time and date stated in that RFP.

It is mutually agreed by DES and the Candidate that the deadline date for DES receipt of design-builder proposals will not be changed unless by mutual consent.

Except in the instance of cancellation of the project by DES, in return for a proposal from the Candidate that fully satisfies the requirements of the RFP, if the Candidate is not awarded the design-build services contract, DES promises to pay the Candidate the lump sum honorarium amount of $200,000.00. Any such honorarium payment will be made after the design-builder selection process has been completed and after a contract for design-build services has been fully executed with the winning proposer.

If for any reason DES should cancel the 1063 Replacement Block project before a contract for design-build services has been executed, DES agrees to reimburse the Candidate for reasonable and actual expenses incurred toward the preparation of the herein authorized design-builder proposal, up to a maximum reimbursement of $200,000.00.

In exchange for DES payment to the Candidate for proposal work performed, Candidate agrees to relinquish all proposal work product to DES for DES to review, copy, distribute, and potentially use for its 1063 Block Replacement project, even though the Candidate may not become signatory to a design-build services contract with DES, so long as the work product is not patented or otherwise protected as a uniquely proprietary work product.

Mutually agreed this date of February 20, 2014 by:

Sellen | ZGF Design-Build Team (Design Build Candidate)	State of Washington, Department of Enterprise Services
(Signature, Authorized Candidate representative)	(Signature, Authorized DES Representative)
Wilf Wainhouse, Chief Operations Officer (Print name and title, Authorized Candidate rep)	Richard Browning, Project Director (Authorized DES Representative)

1063 BLOCK REPLACEMENT

HEATING, COOLING AND AIR HANDLING EQUIPMENT CUT SHEETS

THESE CUT SHEETS ARE BEING PROVIDED IN RESPONSE TO:
RFP, SECTION 4, DESIGN NARRATIVES, PAGE 29

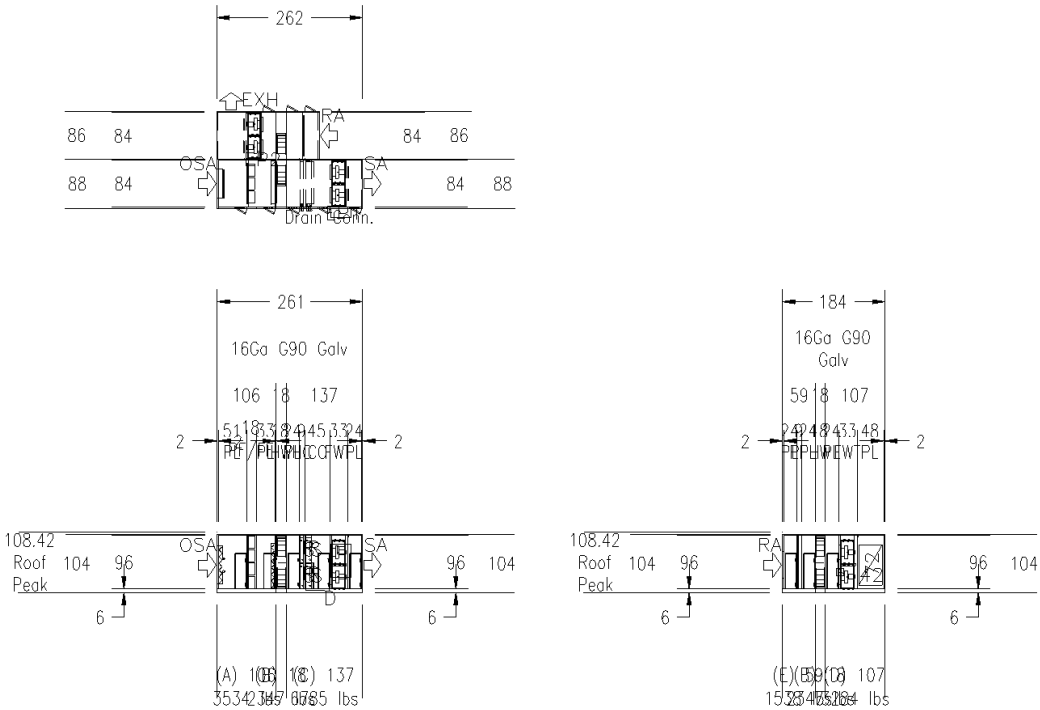

This document is confidential, copyrighted and property of Huntair. To view patents and other pending U.S. or Canadian patent applications visit www.ces-group.com/patents
All dimensions shown in inches, Operating weights shown in pounds
Panelized - Smooth Interior Construction

Project 1

Quote No	Job No	Qty	Date
	-004	1	1/24/2014

Design Name	Type	Weight	Box Qty	Rev
AHU-18K	Outdoor	17,489	5	

Drawn By | Rep

HUNTAIR® a CES Group® Brand
19855 SW 124th Ave. 503-639-0113
Tualatin, OR 97062 www.huntair.com

This document is confidential, copyrighted and property of CES Group LLC and may not be reproduced or used in any fashion without prior written permission. To view patents and other pending U.S. or Canadian patent applications visit ces-group.com/patents

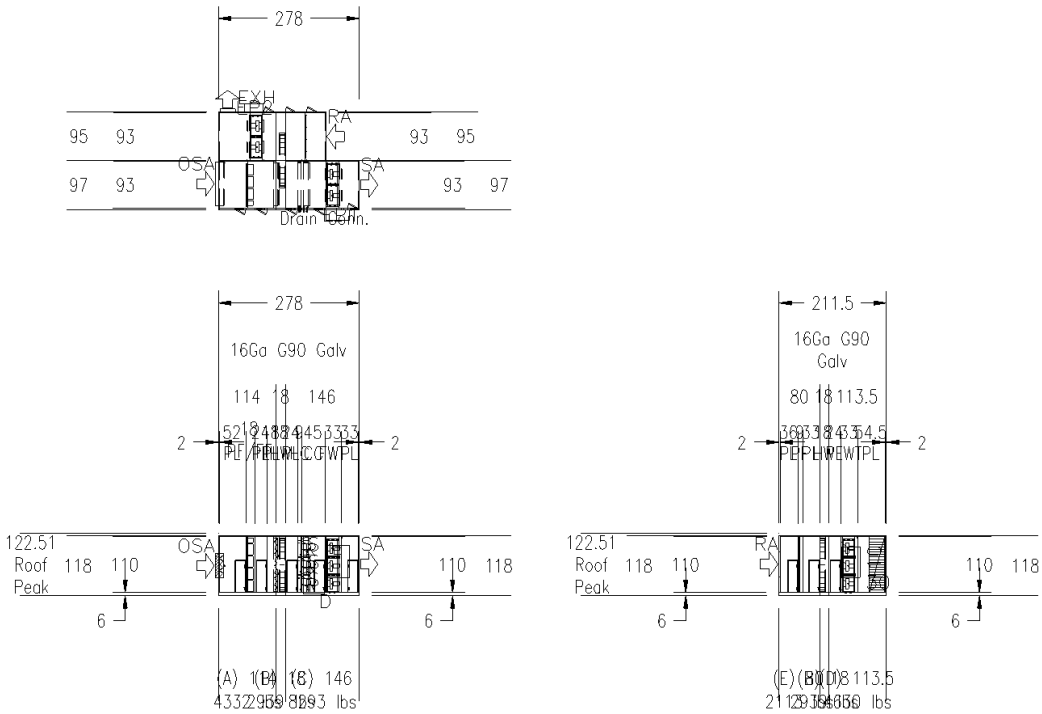

This document is confidential, copyrighted and property of Huntair. To view patents and other pending U.S. or Canadian patent applications visit www.ces-group.com/patents
All dimensions shown in inches, Operating weights shown in pounds
Panelized - Smooth Interior Construction

Project 1

Quote No	Job No	Qty	Date
	-002	1	1/7/2014

Design Name	Type	Weight	Box Qty	Rev
AHU-25K	Outdoor	22,308	5	

Drawn By | Rep

HUNTAIR® a CES Group® Brand
19855 SW 124th Ave. Tualatin, OR 97062
503-639-0113 www.huntair.com

This document is confidential, copyrighted and property of CES Group LLC and may not be reproduced or used in any fashion without prior written permission. To view patents and other pending U.S. or Canadian patent applications visit ces-group.com/patents

BMK SERIES
TECHNICAL DATA SHEET

Benchmark 750 - 6000
Condensing Hydronic Boilers

The AERCO Benchmark (BMK) Water Boiler is designed for condensing application in any closed loop hydronic system. It delivers unmatched burner modulation to match energy input directly to fluctuating system loads to yield the highest possible seasonal efficiencies. And no other product packs as much capacity into such a small footprint.

To minimize emissions, the BMK Series is fitted with a low NOx burner whose emissions will meet the most stringent NOx and CO requirements. The fully modulating burner also maintains AERCO standards for energy efficiency, longevity, reliability and construction quality.

The BMK Series comes standard with AERCO's Patent Pending, Oxygen Level (O_2) monitoring system. This monitoring system, designed to display the O_2 level directly on the unit in real time, can also be remotely monitored via Modbus giving the customer the ability to measure the emissions level and fuel economy of the boiler without traditional combustion calibration devices.

The BMK boilers can be used as an individual unit or in modular arrangements and offers selectable modes of operation. In addition to controlling the boiler according to a constant set point, indoor/outdoor reset schedule or 4-20mA signal, one or more units can be integrated via Modbus communications protocol. For boiler plants ranging from 2-8 boilers, AERCO'S built-in Boiler Management Sequencer* can be utilized. For heating plants greater than 8 boilers, AERCO's ACS (AERCO Control System) provides the right solution. Likewise, Benchmark systems can be easily integrated with a facility-wide Energy Management or Building Automation System.

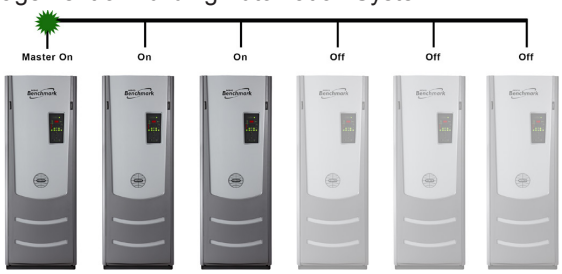

*AERCO's on-board BMS sequencer available December 2013

FEATURES:

- Natural Gas, Propane, or Dual Fuel (model dependant)
- 20:1 Turndown Ratio (5%) depending on capacity
- Oxygen Level (O_2) Monitoring Standard
- Stainless Steel Fire Tube heat exchanger
- Capable of variable primary flow Installations
- NOx Emissions capable of 9PPM or less @ all firing rates *depending on capacity
- Compact Footprint
- Precise Temperature Control
- On Board Boiler Management Sequencer (BMS)
- Ducted Combustion Air Capable
- Easy Open Access for Service
- Acceptable vent materials AL29-4C, Polypropylene, PVC, cPVC (model dependant)
- Reliable Quiet Operation
- Controls Options
  - Constant Setpoint
  - Indoor/ Outdoor Reset
  - Remote Setpoint
  - 4-20mA signal or ModBus

RATINGS:

Model Number	Min Input MBH	Max Input MBH	Max Output[a] MBH	Efficiency Range	AHRI Efficiency 80º to 180ºF
BMK 750	50	750	653-720	87%-98%	95.50%
BMK 1000	50	1000	870-960	87%-98%	96.80%
BMK 1500	75	1500	1305-1425	87%-99%	95% (pending)
BMK 2000	100	2000	1740-1900	87%-98%	95% (pending)
BMK 2500	167	2500	2175-2360	87%-98%	93.50%
BMK 3000	200	3000	2610-2880	87%-98%	93.50%
BMK 6000**	400	6000	5220-5670	87%-98%	94.50%

[a]Max output dependent upon application - See efficiency curves
**See separate BMK6000 Technical Data Sheet for additional BMK6000 details

DIMENSIONS (INCHES):

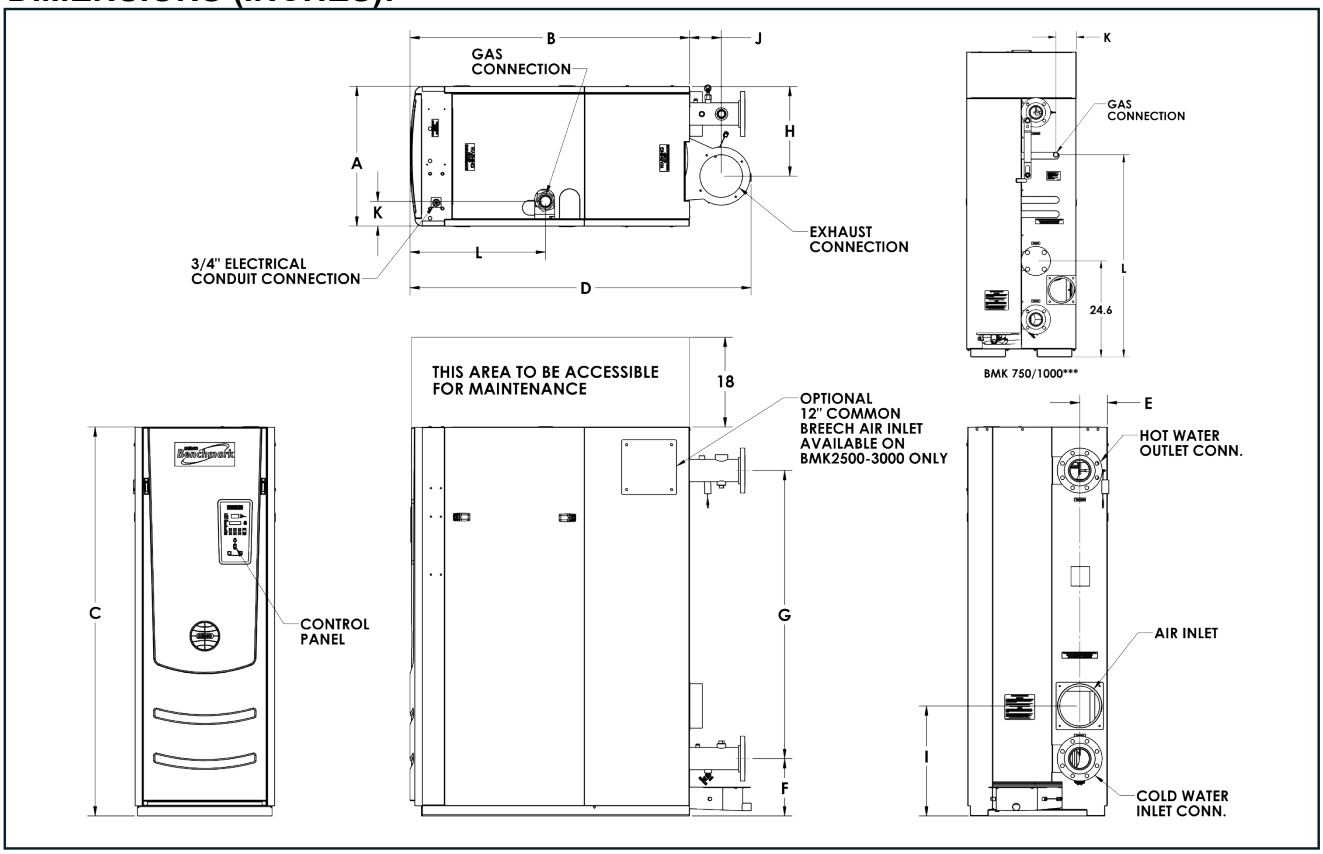

Model	(Width) A	(Depth) B	(Height) C	D	E	F	G	H	I	J	K	L
BMK 750	28”	25”	78”	34”	10”	10”	53”	21”	17”	4”	5”	51.8”
BMK 1000	28”	25”	78”	34”	10”	10”	53”	21”	17”	4”	5”	51.8”
BMK 1500	28”	43.6”	78”	58.4”	7”	11.5”	57.8”	18”	22”	8.9”	4.7”	19.5”
BMK 2000	28”	43.6”	78”	58.4”	7”	11.5”	57.8”	18”	22”	8.9”	4.7”	19.5”
BMK 2500	28”	56”	78”	68.4”	5.4”	11.5”	57.8”	18”	22”	6.4”	3.6”	26”
BMK 3000	28”	56”	78”	68.4”	5.4”	11.5”	57.8”	18”	22”	6.4”	3.6”	26”
BMK 6000**	34”	89.3”	79.4”	108.3”	6.2”	42.1”	N/A	15.6”	N/A	10”	28.7”	23.7”

**See separate BMK6000 Technical Data Sheet for additional BMK6000 dimension details
***BMK750/1000 Feature Dual Inlet Connections

SPECIFICATIONS:

	BMK750	BMK1000	BMK1500	BMK2000	BMK2500	BMK3000	BMK 6000**
Boiler Category	ASME Sect.IV	ASME Sect.IV	ASME Sect.IV	ASME Sect.IV	ASME Sect.IV	ASME Sect.IV	ASME Sect.IV
Gas Connections (NPT)	1”	1”	1.5”	2”	1.5”	2”	2”
Max. Gas Pressure	14”	14”	14”	14”	14”	14”	2psi
Min. Gas Pressure	4”	4”	4”	4”	4”	4”	14”
Max. Allowed Working Pressure	160 PSIG	160 PSIG	160 PSIG	160 PSIG	160 PSIG	160 PSIG	80 PSIG/150 PSIG Optional
Electrical Req. 120V/1PH/60Hz [1]	13 FLA	13 FLA	16 FLA	16 FLA	N/A	N/A	N/A
Electrical Req. 208V/3PH/60Hz [1]	N/A	N/A	N/A	N/A	10 FLA	10 FLA	19 FLA
Electrical Req. 460V/3PH/60Hz [1]	N/A	N/A	N/A	N/A	5 FLA	5 FLA	12 FLA
Water Connections (Flanged)	3”	3”	4”	4”	4”	4”	6”
Min. Water Flow (GPM)	25	25	25	25	35	35	75
Max. Water Flow (GPM)	175	175	250	350	350	350	600
Water Volume Gallons	16.25	14.25	34	28	58	55	110
Water Pressure Drop	3.0 PSIG @ 100 GPM	3.0 PSIG @ 100 GPM	3.0 PSIG @ 170 GPM	3.0 PSIG @ 170 GPM	3.0 PSIG @ 218 GPM	3.0 PSIG @ 261 GPM	4.0 PSIG @ 570 GPM
Turndown	15:1 (7%)	20:1 (5%)	20:1 (5%)	20:1 (5%)	15:1 (7%)	15:1 (7%)	15:1 (7%)
Vent/Air Intake Connections	6 Inch	6 Inch	6 Inch	8 Inch	8 Inch	8 Inch	14 Inch
Vent Materials	AL29-4C Polypro, CPVC, PVC	AL29-4C Polypro, CPVC, PVC	AL29-4C Polypro	AL29-4C Polypro	AL29-4 Polypro	AL29-4C Polypro	AL29-4C
Type of Gas	Natural Gas, Propane	Natural Gas, Propane	Natural Gas, Propane, Dual Fuel	Natural Gas, Propane, Dual Fuel	Natural Gas, Propane, Dual Fuel	Natural Gas, Propane, Dual Fuel	Natural Gas, Propane, Dual Fuel
Temperature Control Range	50ºF to 190ºF						
Ambient Temperature Range	0ºF to 130ºF						
Standard Listings & Approvals	UL, CUL, CSD-1, ASME, AHRI						
Gas Train Operations	FM Compliant or Factory Installed DBB (IRI) (BMK750-BMK3000 Only) FM Compliant (BMK 6000)						
Weight (dry) lbs.	669	700	1406	1500	2,000	2,170	3,000
Weight (wet) lbs.	802	817	1654	1760	2,332	2,580	3,920
Shipping Weight lbs.	862	900	1606	1700	2,200	2,370	3,800

**See separate BMK6000 Technical Data Sheet for additional BMK6000 details

[1] See Benchmark Electrical Power Guide GF-2060 for Service Disconnect Switch amperage requirements.

Dimensions (cont)

30XW225-300 UNIT DIMENSIONS

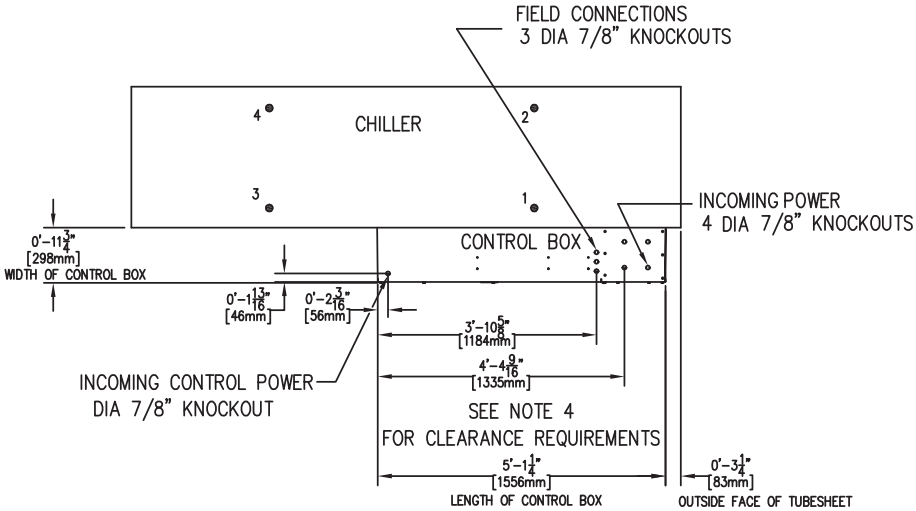

STANDARD 30XW225-300 UNIT DIMENSIONS

30XW UNIT SIZE	OPERATING WEIGHT		MOUNTING LOCATION WEIGHT							
			1		2		3		4	
	lb	kg	lb	kg	lb	kg	lb	kg	lb	kg
225	9,936	4506	1901	862	2390	1084	2501	1134	3144	1426
250	10,010	4541	1915	869	2408	1092	2520	1143	3168	1437
260	9,956	4516	1905	864	2395	1086	2506	1137	3151	1429
275	10,029	4549	1919	870	2412	1094	2524	1145	3174	1440
300	10,043	4557	1921	872	2416	1096	2528	1147	3178	1442

NOTE: Weights shown for standard chiller (2 pass with NIH, victaulic waterboxes).

30XW225-300 UNIT AND WATERBOX SPECIFICATIONS

A	**Evaporator Heat Exchanger Length — 9' - 8 15/16" [2970 mm]**	**C**
B	**Condenser Heat Exchanger Length — 9' - 8 15/16" [2970 mm]**	**D**

Overall Length = Larger of A or B + 9'- 8 15/16" [2970] + larger of C or D, where:
A = evaporator discharge end waterbox length B = condenser discharge end waterbox length
C = evaporator suction end waterbox length D = condenser suction end waterbox length

TYPE	WATERBOX ADDITIONAL LENGTH ADDERS				WATERBOX WEIGHT ADDERS			
	EVAP		COND		EVAP		COND	
	ft-in.	mm	ft-in.	mm	lb	kg	lb	kg
Return Cover	0-4 3/8	111	0-5 1/4	133	Std	Std	Std	Std
NIH 2 Pass Victaulic	0-7 7/16	189	0-8 1/2	216	Std	Std	Std	Std
NIH 2 Pass Flange	1-1 7/8	352	1-1 7/8	352	151	68.5	170	77.1
NIH 1 Pass Flange	1-1 7/8	352	1-1 7/8	352	224	101.6	268	121.6
NIH 3 Pass Flange	1-1 7/8	352	1-1 7/8	352	237	107.6	319	144.7
MWB 2 Pass Victaulic	1-4 5/16	414	1-4 5/16	414	278	126.1	285	129.3
MWB 2 Pass Flange	1-4 5/16	414	1-4 5/16	414	311	141.1	335	152.0
MWB 1 Pass Flange	1-4 5/16	414	1-4 5/16	414	600	272.2	607	275.3
MWB 3 Pass Flange	1-4 5/16	414	1-4 5/16	414	635	288.0	929	421.4

LEGEND

MWB —Marine Waterbox
NIH —Nozzle-In-Head

NOTES:
1. Add the additional weight to the standard unit operating weight to find the total weight of the unit.
2. ◔ Denotes center of gravity.
3. Dimensions shown in ft-in. [mm] unless noted.
4. The recommended service clearance for the machine is 3 ft [914 mm] at the front and rear, 2 ft [610 mm] at the top, and the tube length at one end and 3 ft [914 mm] at the opposite end. Consult local electrical codes for minimum clearance requirements on control panel side.
5. Victaulic nozzles are standard on all units. A flow switch is factory-installed in evaporator inlet victaulic nozzle.
6. Maximum fluid side pressure of condenser or evaporator is 150 psig [1034 kPa] (standard) or 300 psig [2068 kPa] (optional).
7. Operating weight includes weight of water, refrigerant, and oil.

30XW225-300 UNIT DIMENSIONS (cont)

FRONT VIEW — DISCHARGE END

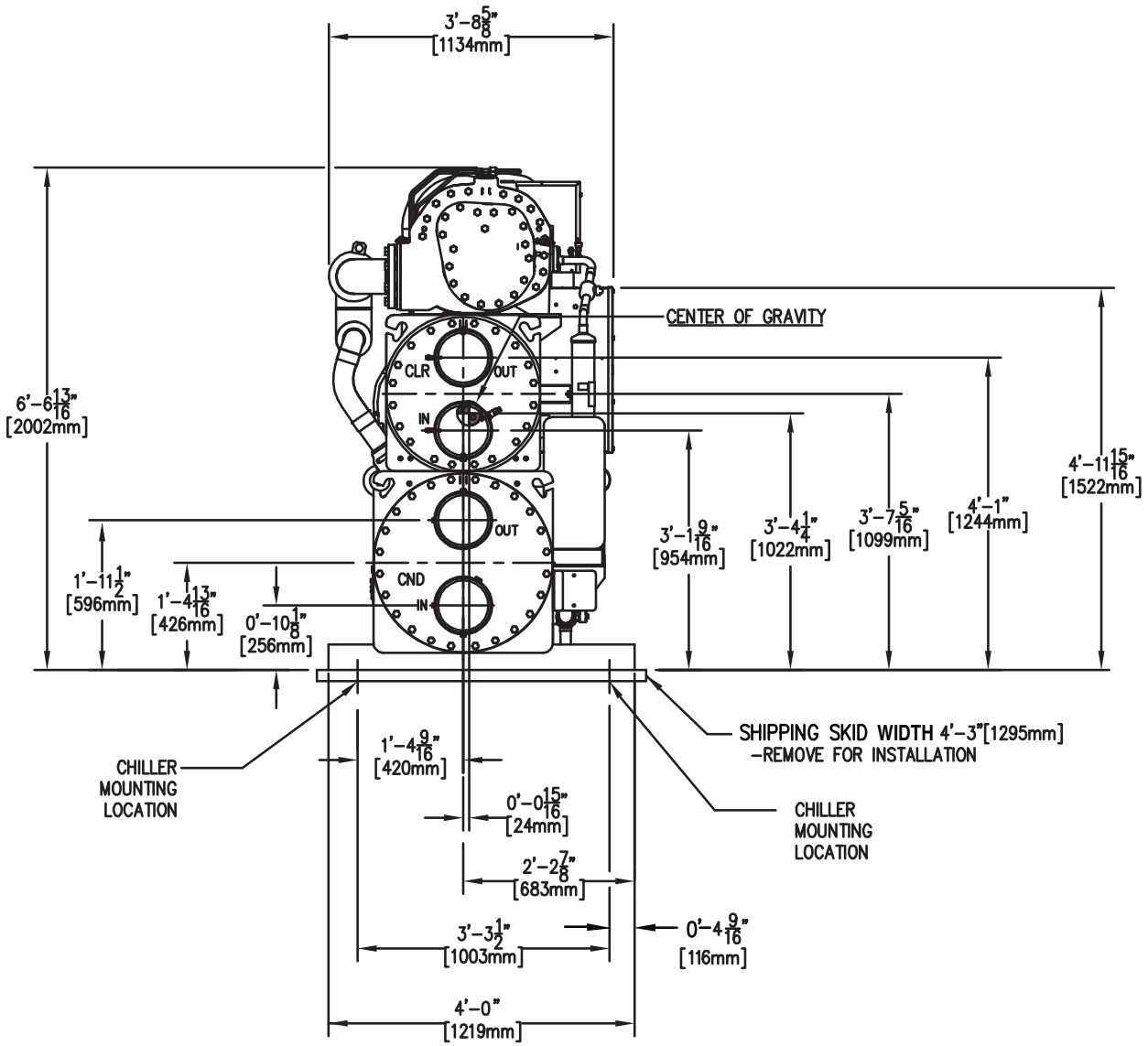

Dimensions (cont)

30XW225-300 UNIT DIMENSIONS (cont)

SIDE VIEW

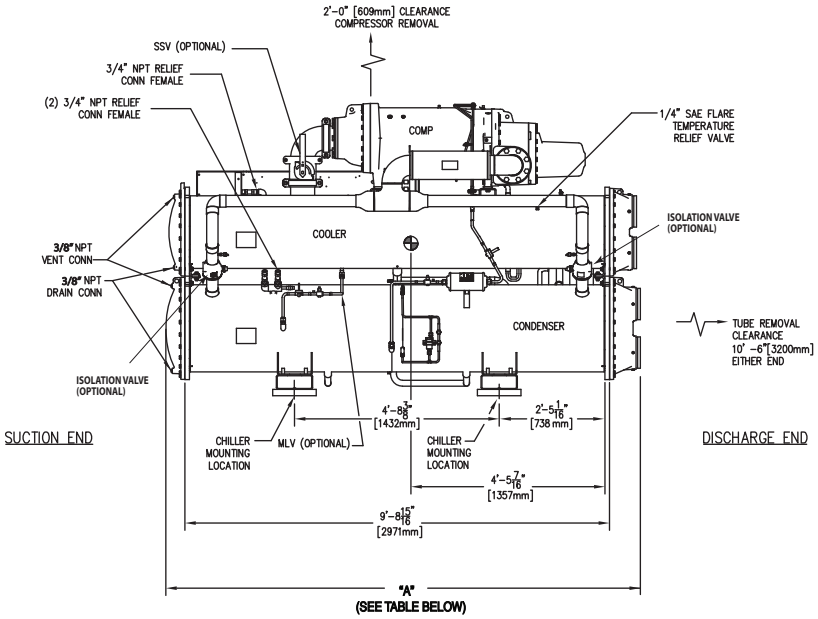

CHILLER DIMENSIONS						
CONNECTION	PASSES COOLER/ COND	WATER BOX COOLER/ COND	PRESSURE PSIG	NOZZLE TYPE	"A" ft-in. [mm]	ADDED WGT lb [kg]
STD ENDS	2P / 2P	NIH / NIH	150 or 300	VIC	10-10 11/16 [3320]	0
STD ENDS	2P / 2P	NIH / NIH	150 or 300	FLG	11- 4 5/16 [3463]	320 [145]
STD ENDS	2P / 2P	NIH / MWB	150 or 300	VIC	11- 6 9/16 [3519]	285 [129]
STD ENDS	2P / 2P	NIH / MWB	150 or 300	FLG	11- 6 9/16 [3519]	335 [152]
STD ENDS	2P / 2P	MWB / NIH	150 or 300	VIC	11- 6 9/16 [3519]	278 [126]
STD ENDS	2P / 2P	MWB / NIH	150 or 300	FLG	11- 6 9/16 [3519]	311 [141]
STD ENDS	2P / 2P	MWB / MWB	150 or 300	VIC	11- 6 9/16 [3519]	563 [255]
STD ENDS	2P / 2P	MWB / MWB	150 or 300	FLG	11- 6 9/16 [3519]	646 [293]
STD ENDS	2P / 3P	NIH / NIH	150 or 300	FLG	12- 0 1/2 [3670]	470 [213]
STD ENDS	2P / 3P	NIH / MWB	150 or 300	FLG	12- 5 5/8 [3800]	1080 [490]
OPP ENDS	1P / 1P	NIH / NIH	150 or 300	FLG	12- 0 11/16 [3676]	492 [223]
OPP ENDS	1P / 1P	NIH / MWB	150 or 300	FLG	12- 5 5/8 [3800]	831 [377]
OPP ENDS	1P / 1P	MWB / NIH	150 or 300	FLG	12- 5 5/8 [3800]	768 [394]
OPP ENDS	1P / 1P	MWB / MWB	150 or 300	FLG	12- 5 5/8 [3800]	1207 [547]
OPP ENDS	2P / 2P	NIH / NIH	150 or 300	VIC	10-10 11/16 [3320]	0
OPP ENDS	2P / 2P	NIH / NIH	150 or 300	FLG	11- 4 5/16 [3463]	320 [145]
OPP ENDS	2P / 2P	NIH / MWB	150 or 300	VIC	11- 6 9/16 [3519]	285 [129]
OPP ENDS	2P / 2P	NIH / MWB	150 or 300	FLG	11- 6 9/16 [3519]	335 [152]
OPP ENDS	2P / 2P	MWB / NIH	150 or 300	VIC	11- 6 9/16 [3519]	278 [126]
OPP ENDS	2P / 2P	MWB / NIH	150 or 300	FLG	11- 6 9/16 [3519]	311 [141]
OPP ENDS	2P / 2P	MWB / MWB	150 or 300	VIC	11- 6 9/16 [3519]	563 [255]
OPP ENDS	2P / 2P	MWB / MWB	150 or 300	FLG	11- 6 9/16 [3519]	646 [293]
OPP ENDS	3P / 1P	NIH / NIH	150 or 300	FLG	12- 0 11/16 [3676]	505 [229]
OPP ENDS	3P / 1P	NIH / MWB	150 or 300	FLG	12- 5 5/8 [3800]	844 [383]
OPP ENDS	3P / 1P	MWB / NIH	150 or 300	FLG	12- 5 5/8 [3800]	903 [410]
OPP ENDS	3P / 1P	MWB / MWB	150 or 300	FLG	12- 5 5/8 [3800]	1242 [470]

LEGEND

1P — 1 Pass
2P — 2 Pass
3P — 3 Pass
MLV — Minimum Load Value
NIH — Nozzle-In-Head
OPP ENDS — Opposite Ends
SAE — Society of Automotive Engineers
SSV — Suction Service Valve
STD ENDS — Standard Ends
VIC — Victaulic

30XW225-300 UNIT DIMENSIONS (cont)

NIH EVAPORATOR

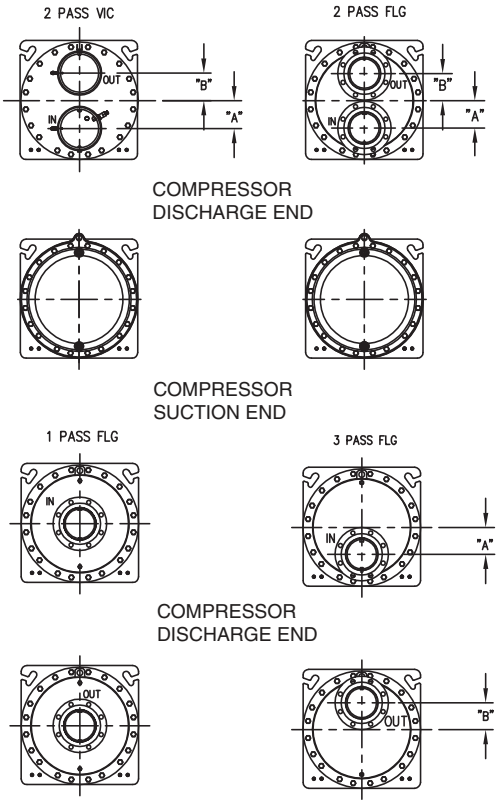

WATERBOX FLANGE DETAIL

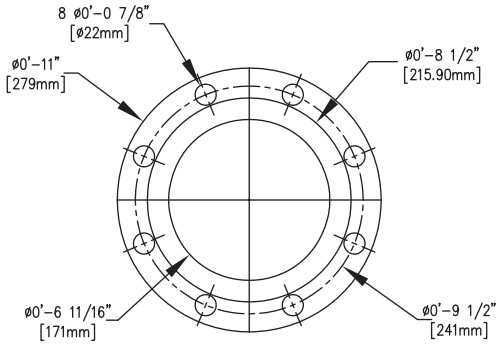

NIH EVAPORATOR

30XW UNIT SIZE	NUMBER OF PASSES	VICTAULIC		
		A in. (mm)	B in. (mm)	CONNECTION SIZE, in. (mm)
225-300	2	$5^{11}/_{16}$ (145)	$5^{11}/_{16}$ (145)	8 (203)
	1	—	—	—
	3	—	—	—

30XW UNIT SIZE	NUMBER OF PASSES	FLANGE		
		A in. (mm)	B in. (mm)	CONNECTION SIZE, in. (mm)
225-300	2	$5^{5}/_{8}$ (142)	$5^{5}/_{8}$ (142)	6 (152)
	1	0 (0)	0 (0)	6 (152)
	3	$5^{1}/_{2}$ (140)	$5^{1}/_{2}$ (140)	6 (152)

MARINE EVAPORATOR

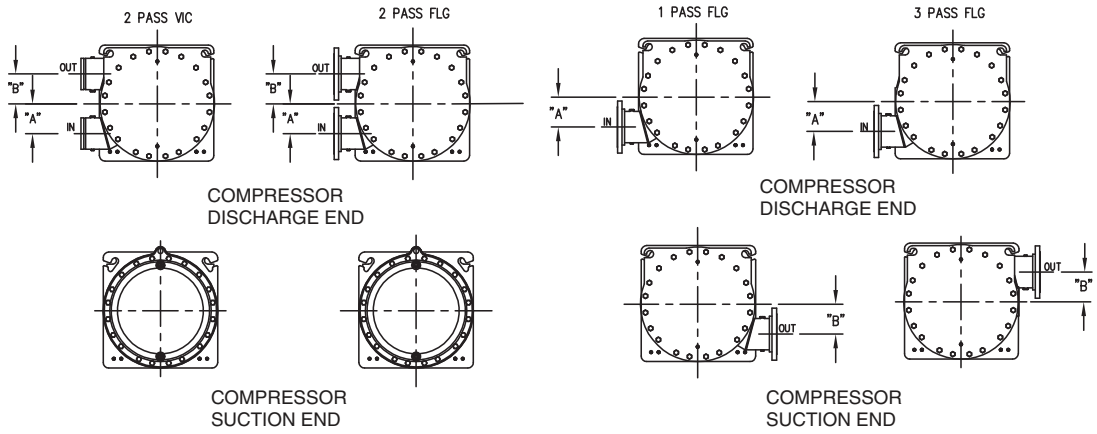

MARINE EVAPORATOR

30XW UNIT SIZE	NUMBER OF PASSES	A in. (mm)	B in. (mm)	CONNECTION SIZE, in. (mm)
225-300	2	$6^{5}/_{16}$ (160)	$6^{5}/_{16}$ (160)	6 (152)
	1*	$6^{5}/_{16}$ (160)	$6^{5}/_{16}$ (160)	6 (152)
	3*	$6^{5}/_{16}$ (160)	$6^{5}/_{16}$ (160)	6 (152)

*Flange only. Not available on Victaulic.

Dimensions (cont)

30XW225-300 UNIT DIMENSIONS (cont)

NIH CONDENSER

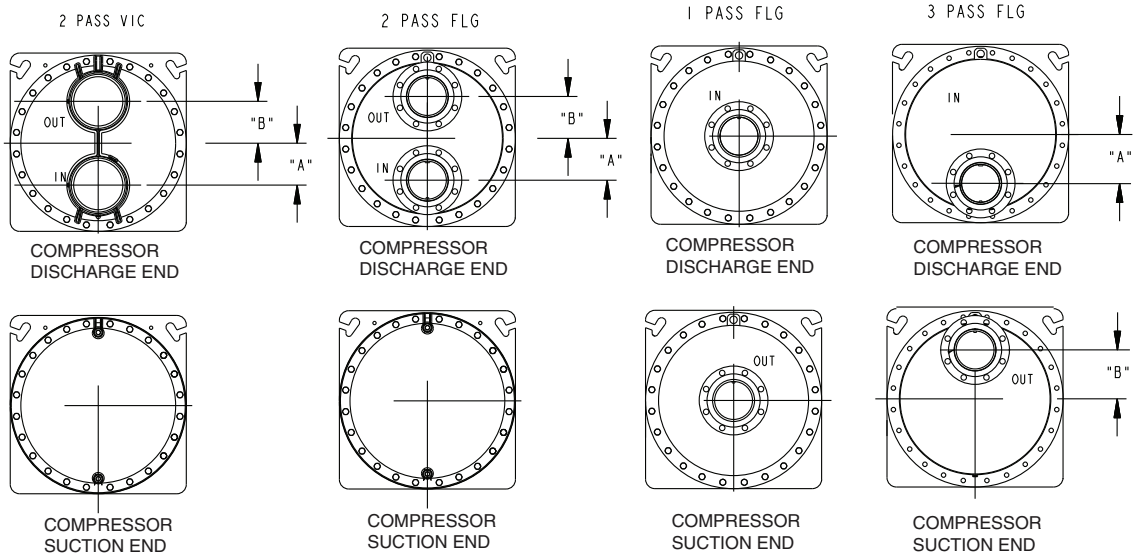

30XW UNIT SIZE	NUMBER OF PASSES	A in. (mm)	B in. (mm)	CONNECTION SIZE, in. (mm)	
				Flange	Victaulic
225-300	2	$6^{11}/_{16}$ (170)	$6^{11}/_{16}$ (170)	6 (152)	8 (203)
	1	0 (0)	0 (0)	6 (152)	—
	3	$7^{3}/_{16}$(198)	$7^{3}/_{16}$ (198)	6 (152)	—

MARINE CONDENSER

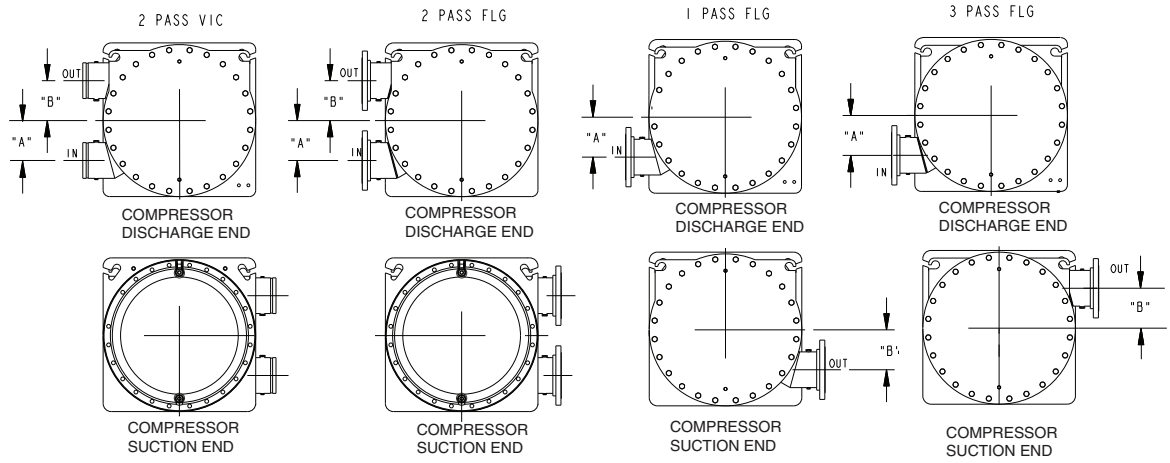

30XW UNIT SIZE	NUMBER OF PASSES	A in. (mm)	B in. (mm)	CONNECTION SIZE, in. (mm)
225-300	2	$7^{3}/_{8}$ (188)	$7^{3}/_{8}$ (188)	6 (152)
	1*	$7^{3}/_{8}$ (188)	$7^{3}/_{8}$ (188)	6 (152)
	3*	$7^{3}/_{8}$ (188)	$7^{3}/_{8}$ (188)	6 (152)

*Flange only. Not available on Victaulic.

Summary Performance Report For HRC-1

Project: WSP Flack and Kurtz 01/30/2014
Prepared By: 07:49AM

AquaForce™ Water Cooled Screw Chiller

Unit Information

Tag Name:	**HRC-1**	
Model Number:	**30XW250**	
Quantity:	**1**	
Manufacturing Source:	**Charlotte, NC USA**	
Refrigerant:	**R134A**	
Independent Refrigerant Circuits:	**1**	
Shipping Weight:	**9291**	lb
Operating Weight:	**10010**	lb
Unit Length:	**131**	in
Unit Width:	**48**	in
Unit Height:	**79**	in

*Dimensions and weights detailed above are for standard configurations only. Please refer to the Product Data for detailed dimensions and weights for all non-standard configurations.

Evaporator Information

Fluid Type:	**Fresh Water**	
Fouling Factor:	**0.00010**	(hr-sqft-F)/BTU
Leaving Temperature:	**42.0**	°F
Entering Temperature:	**54.0**	°F
Fluid Flow:	**458.0**	gpm
Pressure Drop:	**9.1**	ft
ARI Fouling Factor Temp. Adjustment:	**0.4**	°F

Condenser Information

Fluid Type:	**Fresh Water**	
Fouling Factor:	**0.00025**	(hr-sqft-F)/BTU
Leaving Temperature:	**95.0**	°F
Entering Temperature:	**85.0**	°F
Fluid Flow:	**666.9**	gpm
Pressure Drop:	**14.2**	ft
ARI Fouling Factor Temp. Adjustment:	**1.2**	°F

Performance Information

Cooling Capacity:	**229.8**	Tons
Heating Capacity:	**3315852.8**	BTU/hr
Total Unit Power:	**179.6**	kW
Cooling Efficiency:	**0.782**	kW/Ton
Heating Efficiency:	**18.458**	EER

Accessories and Installed Options

Energy Management Module
Suction Service Valve
Minimum Load Control
Control Transformer
GFCI Service Option
Thermal Insulation
Isolation Valve
Discharge End Leaving Evap Water Connection
2 Pass NIH Evap with 8 inch Victaulic Conn
150 psig water side evap pressure rating
Discharge End Leaving Cond Water Connection
2 Pass NIH Cond with 8 inch Victaulic Conn
300 psig water side cond pressure rating
140 deg Heat Machine
BACnet Communication Option
Wye-Delta Starter
Discharge Line Sound Kit
Vibration Pads

Electrical Information

Unit Voltage:	**460-3-60**	V-Ph-Hz
Connection Type:	**Single Point**	
Minimum Voltage:	**414**	Volts
Maximum Voltage:	**506**	Volts

Amps	Electrical Circuit 1	Electrical Circuit 2
MCA	389.4	---
MOCP	700.0	---
ICF	625.0	---
Rec Fuse Size	500.0	---

Packaged Chiller Builder NACO 3.46 Page 1 of 2

Summary Performance Report For HRC-1

Project: WSP Flack and Kurtz 01/30/2014
Prepared By: 07:49AM

Heat Pump operating in cooling and certified in accordance with the AHRI Water-Cooled Water Chilling Packages Using Vapor Compression Cycle Certification Program, which is based on AHRI Standard 550/590 (I-P). Certified units may be found in the AHRI Directory at www.ahridirectory.org.
Sound pressure level data used to develop this program was determined in accordance with AHRI Standard 575 for water chillers in a free field and ANSI/AHRI Standard 370 for air cooled chillers.

EVAPCO, INC.

UNIT	MODEL #	SCALE	DWG. #	REV.	DATE	SERIAL #
CLOSED CIRCUIT COOLER	eco-ATWB 17-3L14-Z	N.T.S.	EG171406-DRA-SF	-	2/11/2014	

NOTES:
1. (M)- FAN MOTOR LOCATION
2. HEAVIEST SECTION IS UPPER SECTION
3. MPT DENOTES MALE PIPE THREAD
   FPT DENOTES FEMALE PIPE THREAD
   BFW DENOTES BEVELED FOR WELDING
4. +UNIT WEIGHT DOES NOT INCLUDE ACCESSORIES (SEE ACCESSORY DRAWINGS)
5. MAKE-UP WATER PRESSURE 20 psi MIN [137 kPa], 50 psi MAX [344 kPa]
6. *-APPROXIMATE DIMENSIONS DO NOT USE FOR PRE-FABRICATION OF CONNECTING PIPING
7. VENT PROVIDED ON CLOSED CIRCUIT COOLERS ONLY
8. SERIES FLOW PIPING AND AUX. CROSSOVER DRAIN BY OTHERS

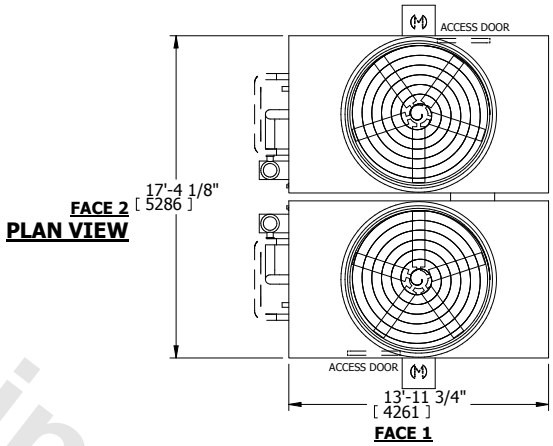

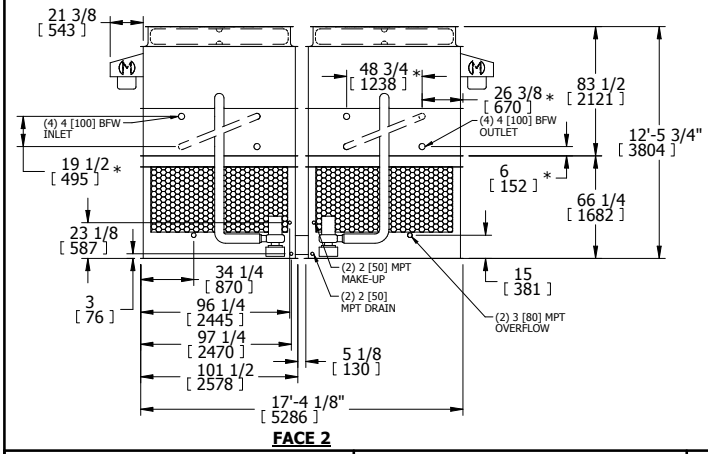

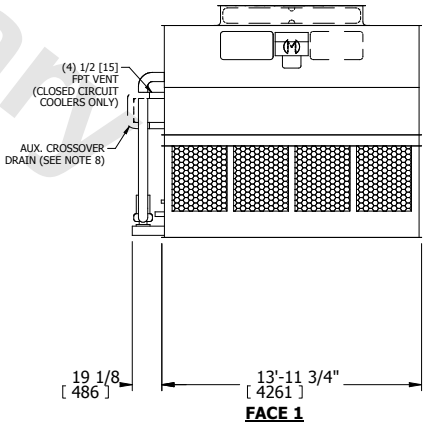

SHIPPING WEIGHT	OPERATING WEIGHT	HEAVIEST SECTION WEIGHT	NO. OF SHIPPING SECTIONS
27440 lbs+ [12447] kg+	40060 lbs+ [18171] kg+	11640 lbs+ [5280] kg+	4

Preliminary

Brandon Stock
JOHNSON-BARROW
2203 23rd Ave South
Seattle, WA 98144
USA
Phone: 206-826-3166 Fax: 206-284-7836

Date: 1/30/2014

Project Summary

Project: WSP Classified ML

Currency: US Dollar

Coolers

Equipment Reference	No. Units	Evapco Model*	Capacity
	1	eco-ATWB 9-3H21	350.00 Tons

*For details on each model see Technical Summary

Quoted pricing is valid for acceptance within thirty (30) days from the date of this quotation and shipment within six (6) months from date of order placement.

Coolers Shipment: 8 weeks after receipt of purchase order and release for fabrication.

Terms: Evapco Terms and Conditions Apply

Sincerely,

Brandon Stock
JOHNSON-BARROW
2203 23rd Ave South
Seattle, WA 98144
USA
Phone: 206-826-3166 Fax: 206-284-7836

evapSelect Version: US Jan 2014

Closed Circuit Cooler

Brandon Stock
JOHNSON-BARROW
2203 23rd Ave South
Seattle, WA 98144
USA
Phone: 206-826-3166 Fax: 206-284-7836

Project : WSP Classified ML
Equipment Reference:
Product Type : eco-ATWB Closed Circuit Cooler

Date: 1/30/2014 Page: 1

	Selection Criteria
Capacity (Tons):	350
Capacity (MBH):	5,250.00
Fluid Type:	Water
Flow (GPM):	1050.0
Entering Fluid Temp (°F):	95.0
Leaving Fluid Temp (°F):	85.0
Wet Bulb (°F):	67.0
Dry Switchover Temp (°F):	-7.0

IBC Design Criteria	
Seismic Design Force (g)	1g
Velocity Pressure (psf)	up to 60

Unit is CTI certified for water as the process fluid and is ASHRAE 90.1 compliant

Qty	Model	Capacity (Tons)	Percent Capacity
1	eco-ATWB 9-3H21	353.02	100.9
	Alternate Selection Criteria	0.00	0.0

All Weights, Dimensions and Technical Data are Shown per Unit

Fans:	2	Overall Length:	21' 0.000"
# Fan Motors @ HP:	(2) @ 7.50 (460/3/60)	Overall Width:	8' 5.500"
# Pump Motors @ HP:	(1) @ 7.50	Overall Height:	11' 11.750"
# Heaters @ kW:	(2) @ 7.00		
Air Flow (CFM)	83,759	Operating Weight (lbs):	30,130
Spray Water Flow (gpm)	1050.0	Shipping Weight (lbs):	20,520
Pressure Drop Through Coil (psi):	11.3	Heaviest Section (lbs):	17,420
Evaporated Water Rate (gpm):	8.40		
Riser Pipe Diameter (inch):	6		

Options Selected

High Flow Coil
(2) Fan Motor: Inverter Capable, Premium Efficient
(2) Fan Motor: Space Heaters
IBC Compliant up to 1g
Pump Motor: ESA Compliant
304 Stainless Steel Cold Water Basin
External Service Platform with Ladder
El. Heaters (0F / -18C ambient) (2) 7 kW
3-Probe Electronic Water Level Control Package
Vibration Switch

Closed Circuit Cooler **Page 2**

Sound Data (Sound Pressure Levels in dB(A))

	End	Mtr Side	Opp End	Opp Mtr Side	Top
S.P.L. dB(A) at 5'	78	80	78	79	80
S.P.L. dB(A) at 50'	63	65	63	64	69

Note 1: Sound Data shown is for 1 Cell operating at full speed

Note 2: The use of frequency inverters (Variable Frequency Drives) can increase sound levels.

Note 3: Sound option(s) selected: None

Layout Criteria

Recommended Clearances Around Units (Feet)

From Unit Ends to Wall:	3.00	Between Unit Ends:	6.00
From Sides to Wall:	3.00	Between Unit Sides:	6.00

Refer to the Equipment Layout Manual or contact your Sales Representative for more details on layout criteria.

Shipping Data

Description		Domestic Skidded Dimensions (in)			Cubic Feet	Total Cubic Feet	Gross Wt (lbs)	Total Gross Wt (lbs)
Section		**Length**	**Width**	**Height**				
Basin	1	270	101	66	1,041	1,041	3,100	3,100
Casing	1	270	101	91	1,436	1,436	17,420	17,420
	2				2,477	2,477	20,520	20,520

Note:

EVAPCO, INC.

UNIT	MODEL #	SCALE	DWG. #	REV.	DATE	SERIAL #
CLOSED CIRCUIT COOLER	eco-ATWB 9-3H21	N.T.S.	EG092106-DRA-HF	-	1/30/2014	

NOTES:
1. (M)- FAN MOTOR LOCATION
2. HEAVIEST SECTION IS UPPER SECTION
3. MPT DENOTES MALE PIPE THREAD
   FPT DENOTES FEMALE PIPE THREAD
   BFW DENOTES BEVELED FOR WELDING
4. +UNIT WEIGHT DOES NOT INCLUDE ACCESSORIES (SEE ACCESSORY DRAWINGS)
5. MAKE-UP WATER PRESSURE 20 psi MIN [137 kPa], 50 psi MAX [344 kPa]
6. *-APPROXIMATE DIMENSIONS DO NOT USE FOR PRE-FABRICATION OF CONNECTING PIPING
7. VENT PROVIDED ON CLOSED CIRCUIT COOLERS ONLY

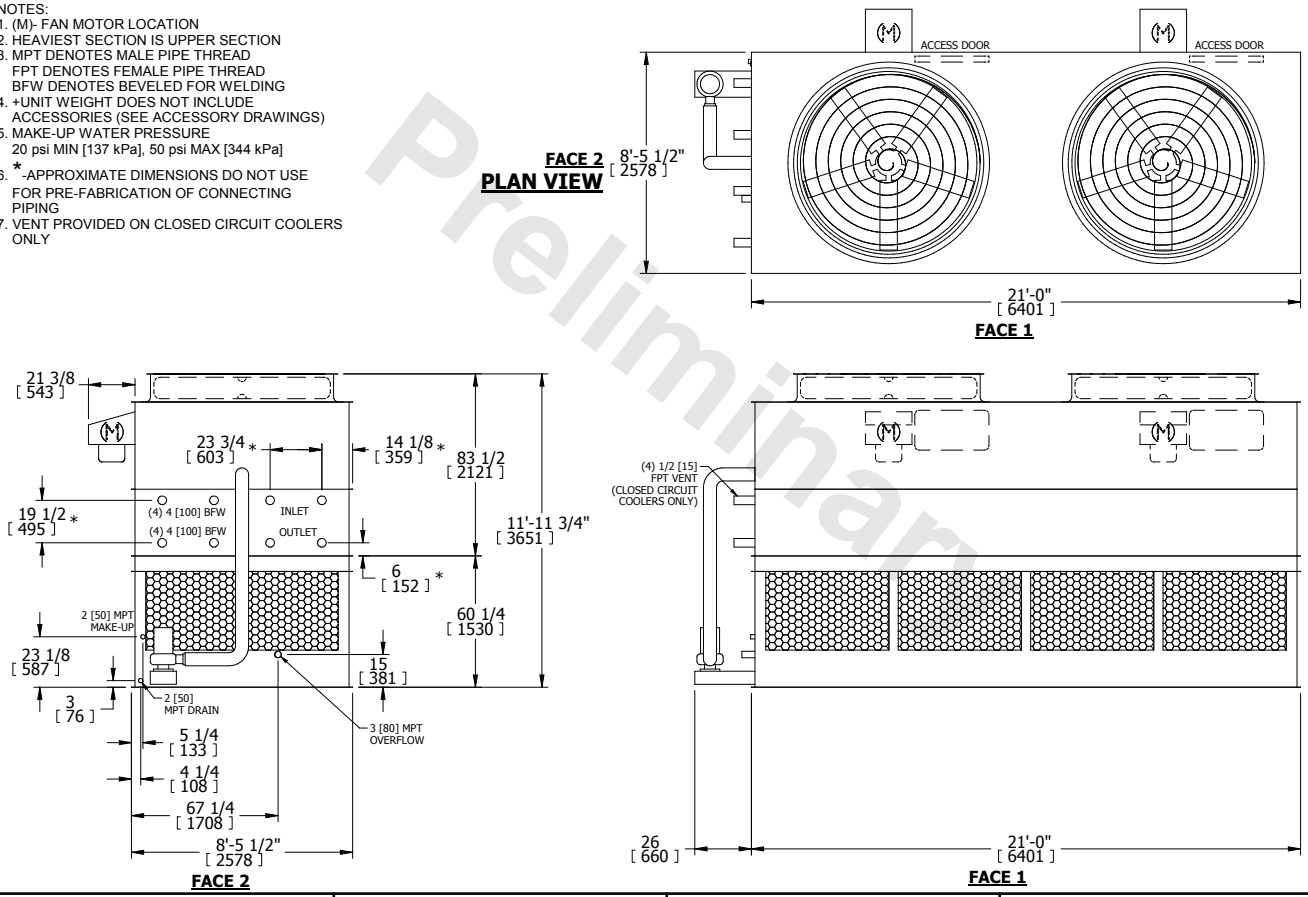

SHIPPING WEIGHT	OPERATING WEIGHT	HEAVIEST SECTION WEIGHT	NO. OF SHIPPING SECTIONS
20520 lbs+ [9308] kg+	30130 lbs+ [13667] kg+	17420 lbs+ [7902] kg+	2

Preliminary

eco-ATWB 9-3H21 **EVAPCO, INC.** 1/30/2014

TITLE	STEEL SUPPORT CONFIGURATION	UNIT:	8.5x21 INDUCED DRAFT COOLER/CONDENSERS	DWG. #	SLAW0921-DD

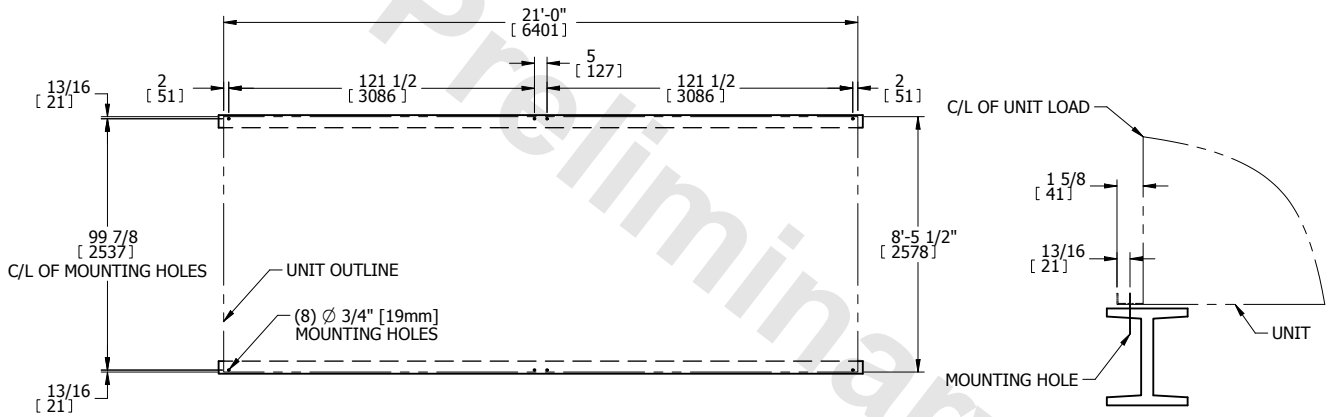

PLAN VIEW

TYPICAL END VIEW

Preliminary

NOTES:

1. BEAMS SHOULD BE SIZED IN ACCORDANCE WITH ACCEPTED STRUCTURAL PRACTICES. MAXIMUM DEFLECTION OF BEAM UNDER UNIT TO BE 1/360 OF UNIT LENGTH NOT TO EXCEED 1/2" [13mm].
2. DEFLECTION MAY BE CALCULATED BY USING 55% OF THE OPERATING WEIGHT AS A UNIFORM LOAD ON EACH BEAM. SEE CERTIFIED PRINT FOR OPERATING WEIGHT.
3. SUPPORT BEAMS AND ANCHOR HARDWARE ARE TO BE FURNISHED BY OTHERS. ANCHOR HARDWARE TO BE ASTM - A325 5/8" [16mm] BOLT OR EQUIVALENT.
4. BEAMS MUST BE LOCATED UNDER THE FULL LENGTH OF THE PAN SECTION.
5. SUPPORTING BEAM SURFACE MUST BE LEVEL. DO NOT LEVEL THE UNIT BY PLACING SHIMS BETWEEN THE UNIT MOUNTING FLANGE AND THE SUPPORTING BEAM.
6. ANCHORING ARRANGEMENT SHOWN HAS A MAXIMUM WIND RATING OF 145 PSF [6.94 KPa] ON CASED VERTICAL SURFACES.
7. THE FACTORY RECOMMENDED STEEL SUPPORT CONFIGURATION IS SHOWN. CONSULT THE FACTORY FOR ALTERNATE SUPPORT CONFIGURATIONS.
8. UNIT SHOULD BE POSITIONED ON STEEL SUCH THAT THE ANCHORING HARDWARE FULLY PENETRATES THE BEAM'S FLANGE AND CLEARS THE BEAM'S WEB.

EVAPCO, INC.

evapco

1/30/2014

TITLE	UNIT:	DWG. #
ELECTRIC WATER LEVEL CONTROL LOCATION	INDUCED DRAFT CONDENSER/COOLER	ELAW3MWML-DB

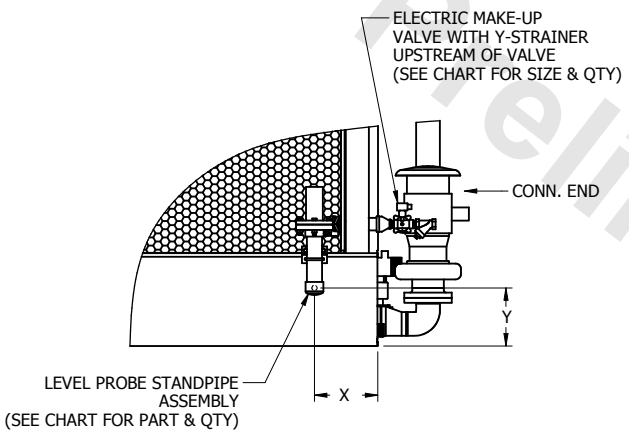

SIDE VIEW

UNIT SELECTED	BOX SIZE	VALVE			Y-STRAINER			STANDPIPE			
		QTY	SIZE	PART NO.	QTY	SIZE	PART NO.	QTY	X	Y	PART NO.
☐	2.24,2.4Mx9-12	1	1 [25]	017-00153P	1	1 [25]	017-00280P	1	23 [584]	9 [229]	094-00014SA
☐	2.24,2.4Mx14-21	1	1 1/2 [40]	017-00154P	1	1 1/2 [40]	017-00281P	1	23 [584]	9 [229]	094-00014SA
☐	2.4Mx24	2	1 [25]	017-00153P	2	1 [25]	017-00280P	1	23 [584]	9 [229]	094-00014SA
☐	2.4Mx28-42	2	1 1/2 [40]	017-00154P	2	1 1/2 [40]	017-00281P	1	23 [584]	9 [229]	094-00014SA
☐	8.5x7.5-12	1	1 [25]	017-00153P	1	1 [25]	017-00280P	1	23 [584]	9 [229]	094-00014SA
☐	8.5x14-21	1	1 1/2 [40]	017-00154P	1	1 1/2 [40]	017-00281P	1	23 [584]	9 [229]	094-00014SA
☐	8.5x24	2	1 [25]	017-00153P	2	1 [25]	017-00280P	1	23 [584]	9 [229]	094-00014SA
☐	8.5x28	2	1 1/2 [40]	017-00154P	2	1 1/2 [40]	017-00281P	1	23 [584]	9 [229]	094-00014SA
☐	12x12,14	1	1 1/2 [40]	017-00154P	1	1 1/2 [40]	017-00281P	1	12 [305]	11 1/2 [292]	060-00027SA
☐	12x18,20	1	2 [50]	017-00155P	1	2 [50]	017-00282P	1	12 [305]	11 1/2 [292]	060-00027SA
☐	12x24,28	2	1 1/2 [40]	017-00154P	2	1 1/2 [40]	017-00281P	1	12 [305]	11 1/2 [292]	060-00027SA
☐	12x36,40	2	2 [50]	017-00155P	2	2 [50]	017-00282P	1	12 [305]	11 1/2 [292]	060-00027SA
☐	3Mx12	1	1 1/2 [40]	017-00154P	1	1 1/2 [40]	017-00281P	1	12 [305]	11 1/2 [292]	060-00027SA
☐	3Mx18	1	2 [50]	017-00155P	1	2 [50]	017-00282P	1	12 [305]	11 1/2 [292]	060-00027SA
☐	3Mx24	2	1 1/2 [40]	017-00154P	2	1 1/2 [40]	017-00281P	1	12 [305]	11 1/2 [292]	060-00027SA
☐	3Mx36	2	2 [50]	017-00155P	2	2 [50]	017-00282P	1	12 [305]	11 1/2 [292]	060-00027SA

NOTES:
1. PIPING BY OTHERS.
2. LEVEL PROBE STANDPIPE ASSEMBLY, MAKE-UP VALVE AND Y-STRAINER TO SHIP LOOSE FOR FIELD MOUNTING BY OTHERS.
3. SEE CERTIFIED PRINT FOR MAKE-UP LOCATION.
4. STANDPIPE TO BE HEAT TRACED AND INSULATED FOR WINTER OPERATION (BY OTHERS).
5. THE ELECTRONIC WATER LEVEL CONTROL ON THIS UNIT WILL MAINTAIN THE PROPER OPERATING WATER LEVEL. HOWEVER, BEFORE INITIAL START-UP THE UNIT MUST BE MANUALLY FILLED TO WITHIN 1" OF THE OVERFLOW.
6. FOR EASE OF MAITENANCE, A SHUT-OFF VALVE IS RECOMMENDED UPSTREAM OF Y-STRAINER.
7. DIMENSIONS LISTED AS FOLLOWS: ENGLISH IN
[METRIC] [mm]

Preliminary

EVAPCO, INC.

1/30/2014

TITLE	UNIT:	DWG. #
EXTERNAL SERVICE PLATFORM	ALL 8 1/2 X 21 AT COOLER/CONDENSER UNITS	PLAW30921DD

MODEL #	H
eco-ATW/eco-ATWE/ATWB-9-3H21, 3I21, 3J21, 3K21	84 1/8 [2136]
ATW-179-3I, 3J	
ATC-508E	
eco-ATC 540, 592	
eco-ATW/eco-ATWE/ATWB-9-4H21, 4I21, 4J21, 4K21	91 5/8 [2327]
ATW-179-4I, 4J	
ATC-557E, 609E	
eco-ATC 561, 597, 654	
eco-ATW/eco-ATWE/ATWB-9-5I21, 5J21, 5K21, 5L21	99 1/8 [2517]
ATW-179-5J, 5K	
ATC-666E, 703E	
eco-ATC 628, 688, 730	
eco-ATW/eco-ATWE/ATWB-9-6J21, 6K21, 6L21	106 5/8 [2708]
ATW-179-6K, 6L	
ATC-687E, 725E, 755E	
eco-ATC 656, 718, 762, 797	
ATWB-9-7J21, 7K21, 7L21	112 3/8 [2854]

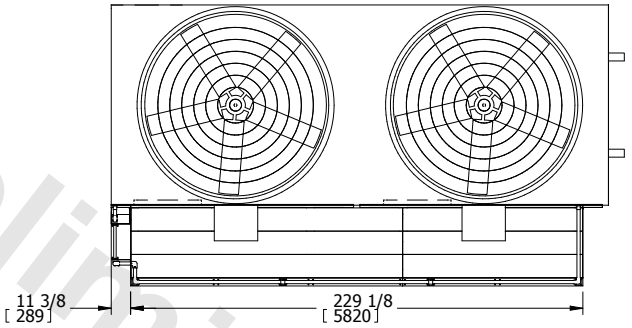

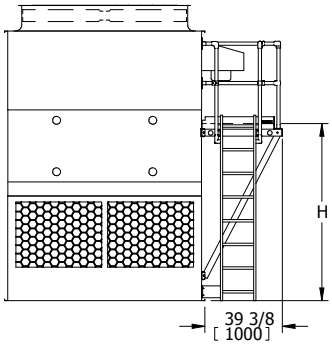

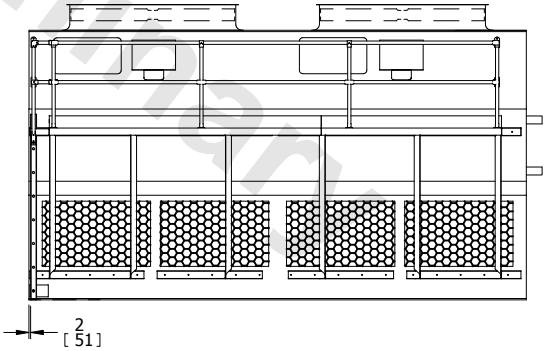

Preliminary

NOTES:
1. LADDER AND PLATFORM SHIP LOOSE. FIELD INSTALLATION BY OTHERS IS REQUIRED.
2. THE BOTTOM OF THE LADDER DOES NOT EXTEND PAST THE BASE OF THE UNIT. IF THE UNIT IS ELEVATED THEN AN OPTIONAL EXTENDED LADDER PACKAGE SHOULD BE CONSIDERED. (CONSULT FACTORY)
3. REFER TO RIGGING PACK FOR LADDER AND PLATFORM MOUNTING INSTRUCTIONS.
4. EACH PLATFORM AND LADDER ASSY. WEIGHS 1080 LBS. [490KG]
5. FOR STANDARD UNITS, REFER TO UNIT CERTIFIED PRINT FOR PUMP LOCATION(S).

EVAPCO, INC.

TITLE HEATER LOCATION	UNIT: 8.5x12/14/18/21 INDUCED DRAFT CONDENSER/COOLER eco-ATWB 9-3H21	DWG. # HLAW09VO-DA 1/30/2014

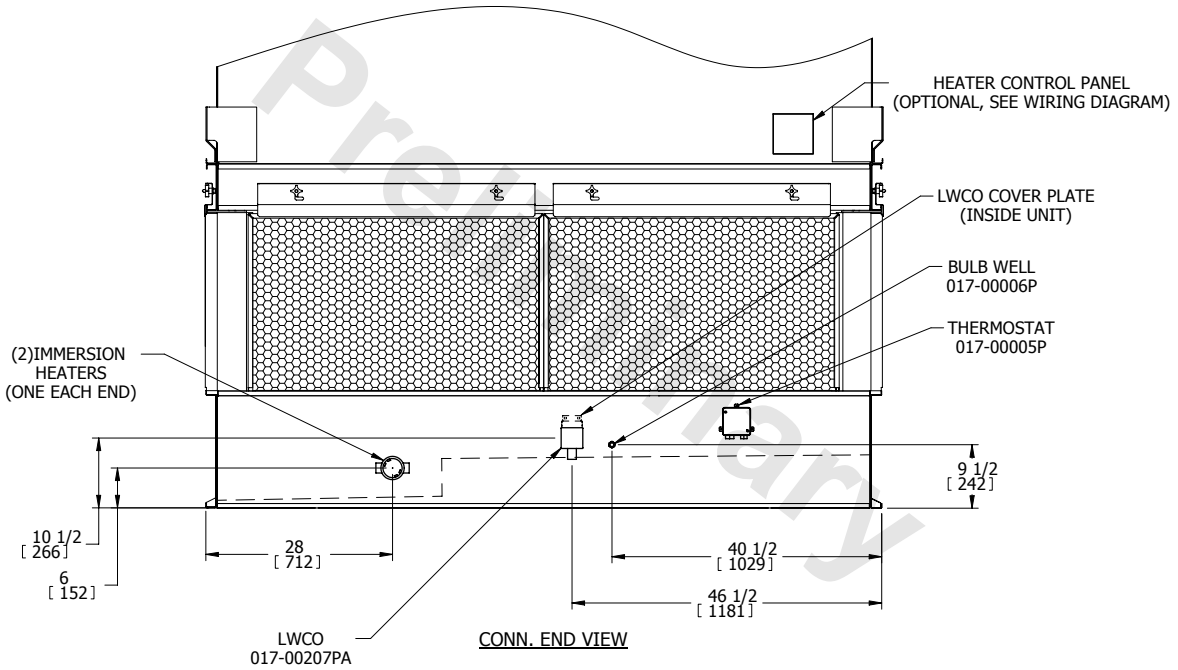

NOTES:
1. A MINIMUM OF CLEARANCE IS REQUIRED BETWEEN THE HEATER OUTLET BOX AND THE NEAREST OBSTRUCTION FOR REMOVAL OF THE HEATER.
2. ALL NIPPLES ON UNIT ARE NOT SHOWN IN ORDER TO CLARIFY HEATER COMPONENT LOCATIONS.
3. ALL HEATER COMPONENTS BY EVAPCO ARE FACTORY MOUNTED WHEN POSSIBLE.
4. DIMENSIONS LISTED AS FOLLOWS: ENGLISH IN
[METRIC] [mm]

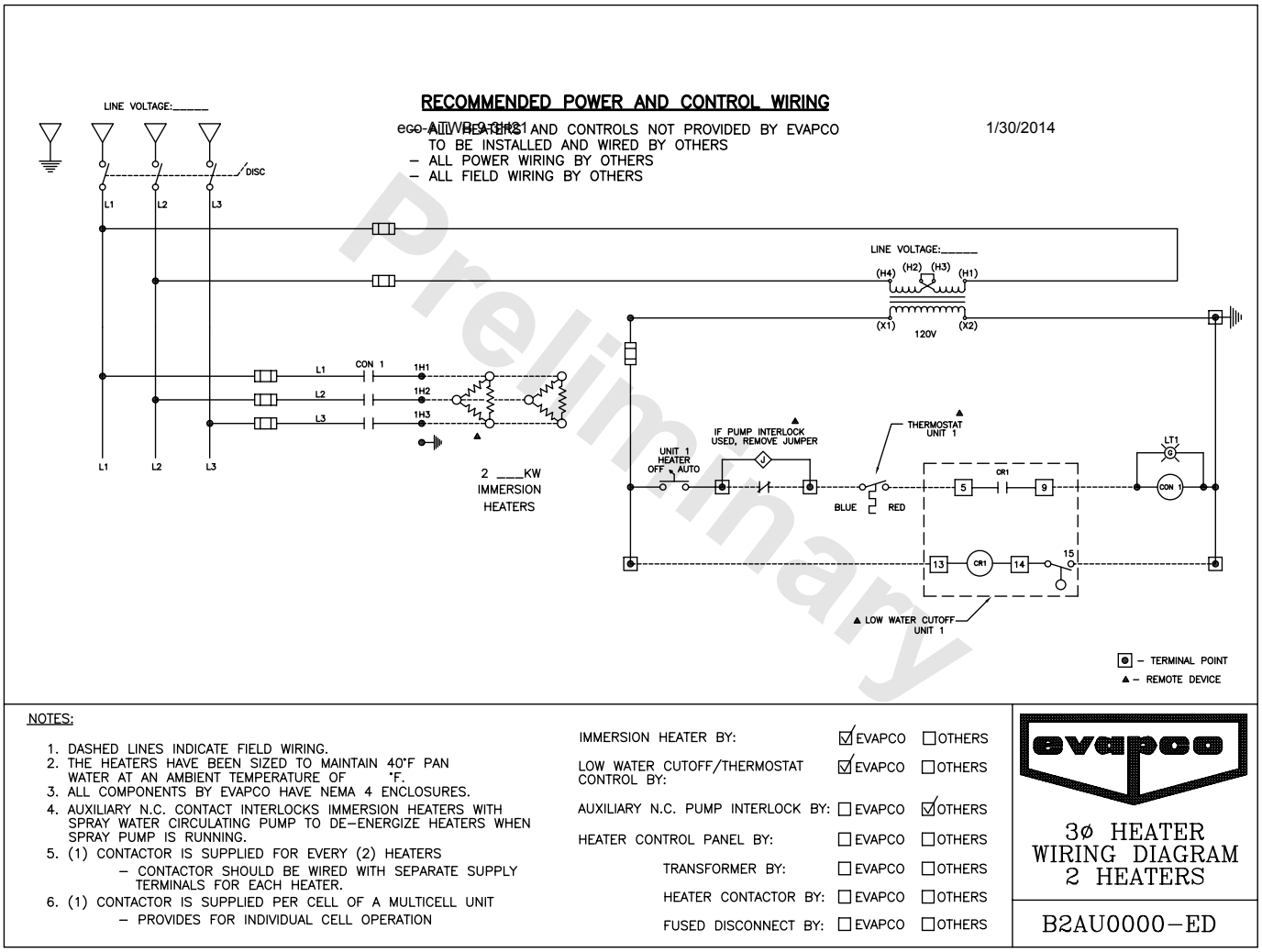

NOTES:

1. DASHED LINES INDICATE FIELD WIRING.
2. THE HEATERS HAVE BEEN SIZED TO MAINTAIN 40°F PAN WATER AT AN AMBIENT TEMPERATURE OF °F.
3. ALL COMPONENTS BY EVAPCO HAVE NEMA 4 ENCLOSURES.
4. AUXILIARY N.C. CONTACT INTERLOCKS IMMERSION HEATERS WITH SPRAY WATER CIRCULATING PUMP TO DE–ENERGIZE HEATERS WHEN SPRAY PUMP IS RUNNING.
5. (1) CONTACTOR IS SUPPLIED FOR EVERY (2) HEATERS
   – CONTACTOR SHOULD BE WIRED WITH SEPARATE SUPPLY TERMINALS FOR EACH HEATER.
6. (1) CONTACTOR IS SUPPLIED PER CELL OF A MULTICELL UNIT
   – PROVIDES FOR INDIVIDUAL CELL OPERATION

IMMERSION HEATER BY:	☑ EVAPCO	☐ OTHERS
LOW WATER CUTOFF/THERMOSTAT CONTROL BY:	☑ EVAPCO	☐ OTHERS
AUXILIARY N.C. PUMP INTERLOCK BY:	☐ EVAPCO	☑ OTHERS
HEATER CONTROL PANEL BY:	☐ EVAPCO	☐ OTHERS
TRANSFORMER BY:	☐ EVAPCO	☐ OTHERS
HEATER CONTACTOR BY:	☐ EVAPCO	☐ OTHERS
FUSED DISCONNECT BY:	☐ EVAPCO	☐ OTHERS

3ø HEATER
WIRING DIAGRAM
2 HEATERS

B2AU0000–ED

EVAPCO, INC.

TITLE	DESCRIPTION:	DWG. #
VIBRATION SWITCH	eco-ATWB 9-3H21 SINGLE SPEED	1/30/2014 V1AU0000-EE

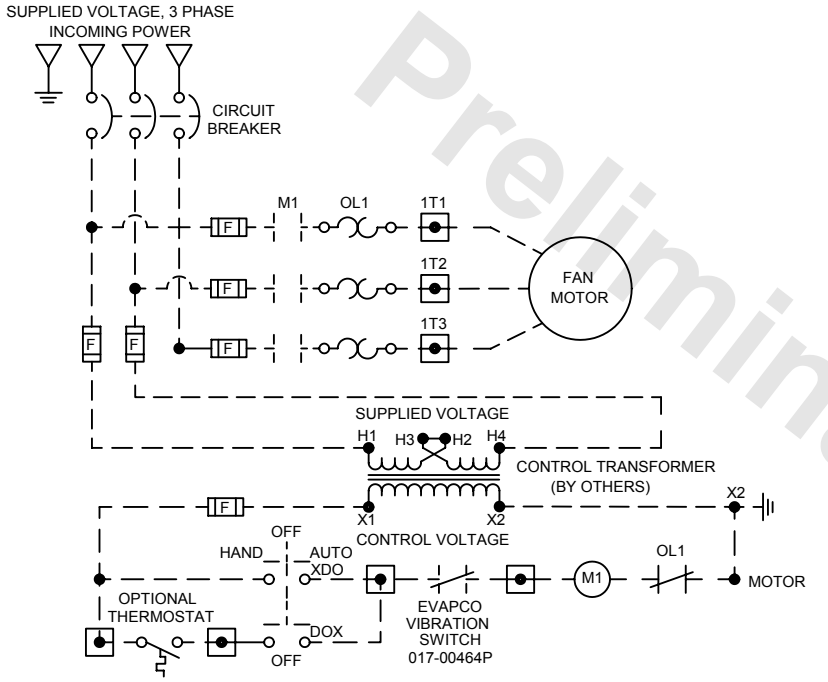

SWITCH CONTACT RATING:
15 AMPS, 125, OR 480 Vac; 1/8 HP, 125 Vac; 1/4 HP, 250 Vac; 1/2 AMP, 125 Vdc; 1/4 AMP, 250 Vdc.

WIRING DIAGRAM:

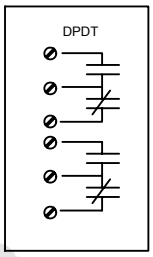

NOTES:
1. DASHED LINES INDICATE WIRING(BY OTHERS)

Preliminary

ADJUSTMENT

ADJUST THE SWITCH SO THAT DURING FULL SPEED START-UP AND UNDER NORMAL CONDITIONS, THE CONTACTS DO NOT TRIP. FIRST, WITH THE MOTOR OFF, TURN THE ADJUSTMENT SCREW COUNTER-CLOCKWISE (MORE SENSITIVE DIRECTION) UNTIL THE SWITCH TRIPS. NEXT, TURN THE ADJUSTMENT SCREW CLOCKWISE 1/8 TURN (LESS SENSITIVE DIRECTION). RESET THE SWITCH BY DEPRESSING THE PUSH-BUTTON RESET LOCATED ON TOP OF THE SWITCH. START THE MOTOR ON FULL SPEED. IF THE MOTOR TRIPS THE SWITCH, THEN TURN THE ADJUSTMENT SCREW CLOCKWISE AN ADDITIONAL 1/8 TURN. RESET THE SWITCH AND START THE MOTOR AGAIN. REPEAT THE ABOVE PROCEDURE UNTIL THE MOTOR CONTINUES TO RUN.

EVAPCO, INC.

TITLE	DESCRIPTION:	DWG. #
ELECTRIC WATER LEVEL CONTROL WIRING	eco-ATWB 9-3H21 INDUCED DRAFT - 3 PROBE, 1 VALVE	1/30/2014 C1AI0000-A

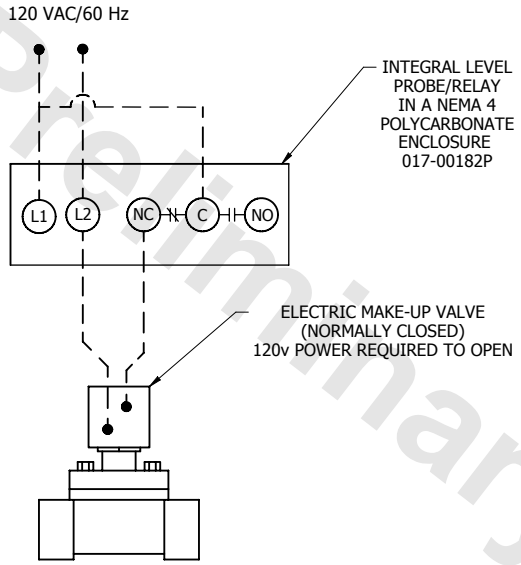

Preliminary

NOTES:
1. DASHED LINES INDICATE WIRING BY OTHERS.
2. TYPICAL WIRING PER PROBE.

Sound Pressure Levels (SPL) in dB RE 0.0002 Microbar
Sound Power Levels (PWL) in dB RE 10-12 Watt

MODEL eco-ATWB 9-3H21
MOTOR 7.50 HP HP
MOTORS 2
SPEED: Full Speed

1 **CELL DATA**

	SOUND PRESSURE LEVEL (dB)											
	End		Motor Side		Opp End		Opp Mtr. Side		Top			SOUND
	5 ft	50 ft	5 ft	50 ft	5 ft	50 ft	5 ft	50 ft	5 ft	50 ft		POWER
BAND	(1.5m)	(15m)	(1.5m)	(15m)	(1.5m)	(15m)	(1.5m)	(15m)	(1.5m)	(15m)		LEVEL (dB)
63 HZ	74	67	75	69	74	67	75	68	77	69		100
125 HZ	77	67	78	68	77	67	78	68	83	67		99
250 HZ	77	67	79	69	77	67	78	68	83	71		101
500 HZ	73	58	75	61	73	58	74	59	77	68		95
1 KHZ	71	56	73	59	71	56	72	58	73	60		90
2 KHZ	69	51	70	55	69	51	70	54	70	58		87
4 KHZ	71	49	72	53	71	49	72	53	69	57		85
8 KHZ	72	49	73	52	72	49	73	52	68	56		84
CALC dBA	78	63	80	65	78	63	79	64	80	69		97

Sound option(s) selected: None

REMARKS:
1. Sound Pressure Levels are according to CTI Standard ATC-128
2. Sound Power Levels are calculated according to the Small Units Section 8
3. Sound from free-field conditions over a reflecting plane with +/-2 db(A) tolerance
4. Noise levels can increase with variable frequency drives depending on the drive manufacturer and the drive configuration
5. Complete unit sound data with all fans operating

Titus

Submittal

TU-LSC-SB
11-12-2012

Low Profile, Series Fan Powered Terminal Unit with Sensible Cooling Coil

(400 to 1800 cfm)

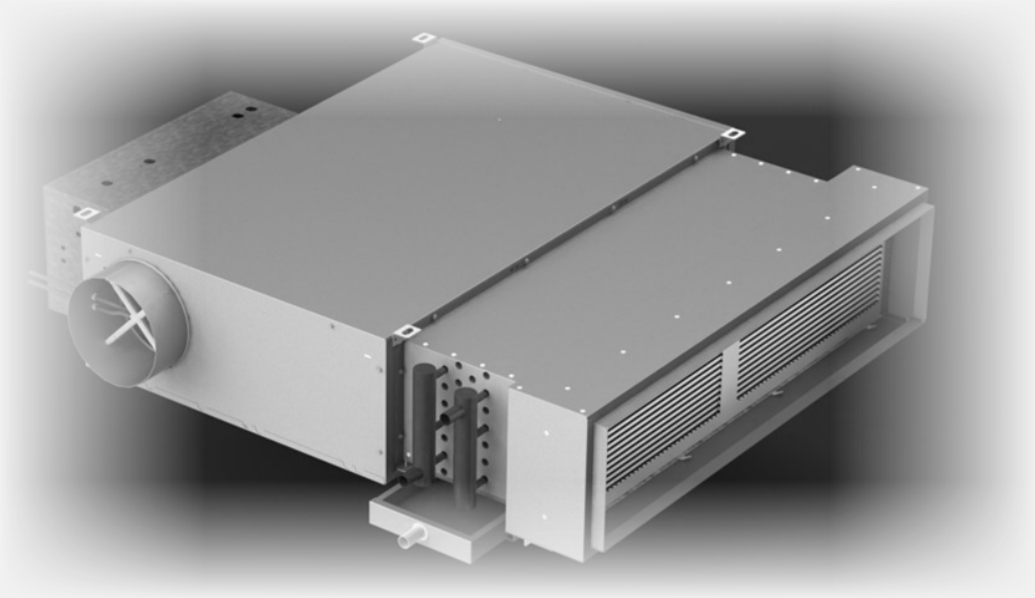

Model: LSC RevA

Titus®

Note: This submittal is meant to demonstrate general dimensions of this product. The drawings on this submittal are not meant to detail every aspect of the product with exactness. Drawings are not to scale. TITUS reserves the right to make changes without written notice.

605 Shiloh Road • Plano, Texas 75074• 972-212-4800

All rights reserved. No part of this work may be reproduced or transmitted in any form or any means, electronic or mechanical, including photocopying and recording, or by any information storage retrieval system without permission in writing from Air Distribution Technologies

TU-LSC-SB

Submittal

LSC Low Profile, Series Fan Powered TU with Cooling Coil

General Description

- Low Profile design under 12" high on all sizes for application on shallow ceiling plenums.
- Pressure independent primary air flow control.
- Casing manufactured of 20 gauge G40 galvanized steel. Mechanically sealed, leak resistant construction with less than 2% of nominal CFM at 1.5" wg static pressure.
- Standard internal liner, ½ EcoShield Matted faced for resistance to air erosion. Contains no harmful irritants or chemicals with EPA registered antimicrobial inhibitor and meets requirements of NFPA 90A and UL 181.
- Ultra High efficiency ECM brushless DC motor with microprocessor based controller.
- DWDI direct driven centrifugal blowers manufactured of galvanized steel.
- Fan Airflow controlled by a Manual or Remote PWM speed controller.
- Titus AeroCross multipoint center averaging inlet velocity sensor with +/- 5% accuracy across the complete airflow range.
- Fully gasketed heavy duty round damper manufactured of heavy gauge galvanized steel with metal shaft rotating in Delrin self-lubricating bearings.
- Primary air flow balancing connections for CFM measurement.
- Single point electrical connections.
- Rectangular discharge opening is designed for flanged duct connections.
- Double wall Condensate Pan with ¾" Drain Connection.
- High Efficiency SENSIBLE Cooling and booster Heating coils factory installed on Induced air inlet.
- Removable Bottom Access panel for easy service/maintenance.
- UL Class2 control transformer 24V secondary voltage.
- ETL Certified

Model Sizes

TAG	Qty	Unit Size		Handing		Primary Air Inlet Size				Primary Air (CFM)		FAN (CFM)	Cooling + Heating Coils			
		3	4	LH	RH	4"	6"	8"	16x8	MIN	MAX		2R	2+1R	4R	4+1R

Notes:
1 – Primary Air Inlet Sizes"
Unit Size 3 – 4", 6" & 8" Dia
Unit Size 4 = 8" Dia & 16"x8"

Basic Unit Configuration

- ☐ Righ Hand Control Enclosure
- ☐ Left Hand Control Enclosure
- ☐ EcoShield Liner ½" (Matte)
- ☐ EcoShield Liner ½" Foil Faced
- ☐ FiberGlass Liner ½" Dual Density
- ☐ FiberGlass Liner ½" Foil Faced
- ☐ FiberFree ½"
- ☐ ECM Motor 120V/1Ph/60Hz
- ☐ ECM Motor 208V/1Ph/60Hz
- ☐ ECM Motor 277V/1Ph/60Hz
- ☐ Manual PWM ECM Motor C'trl
- ☐ Remote PWM ECM Motor C'trl
- ☐ 2Row Cool Coil - 10FPI
- ☐ 2Row Cool + 1 Row Heat Coil - 10FPI
- ☐ 4Row Cool Coil - 10FPI
- ☐ 4Row Cool + 1 Row Heat Coil - 10FPI

Note: This submittal is meant to demonstrate general dimensions of this product. The drawings on this submittal are not meant to detail every aspect of the product with exactness. Drawings are not to scale. TITUS reserves the right to make changes without written notice.

605 Shiloh Road • Plano, Texas 75074• 972-212-4800

All rights reserved. No part of this work may be reproduced or transmitted in any form or any means, electronic or mechanical, including photocopying and recording, or by any information storage retrieval system without permission in writing from Air Distribution Technologies

TU-LSC-SB

Basic Unit Dimensions

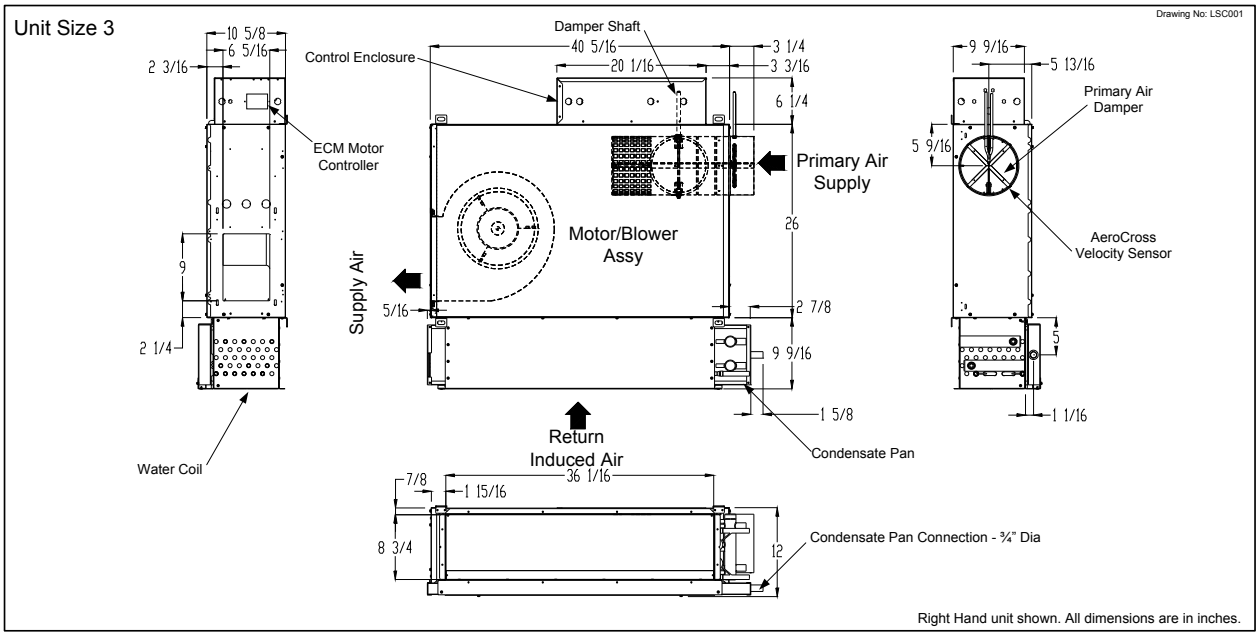

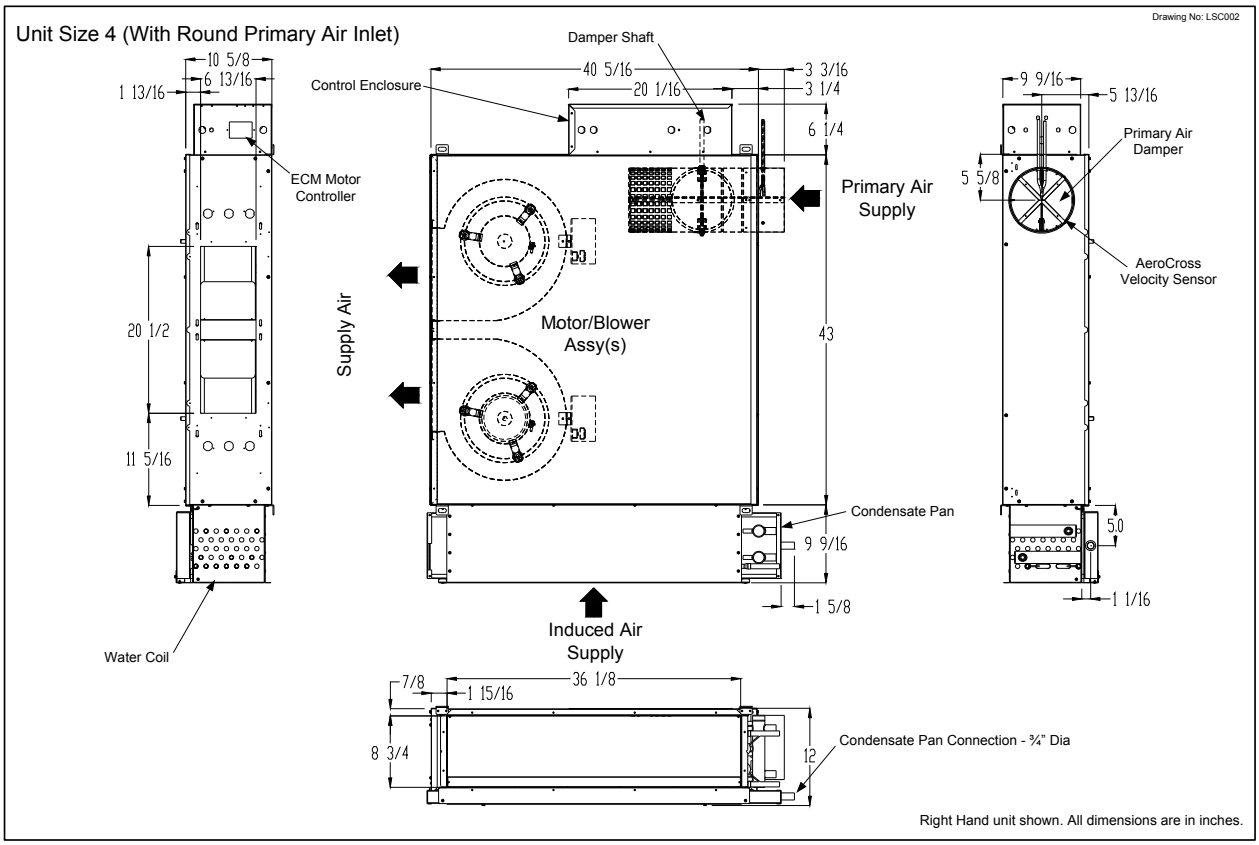

Titus®

Note: This submittal is meant to demonstrate general dimensions of this product. The drawings on this submittal are not meant to detail every aspect of the product with exactness. Drawings are not to scale. TITUS reserves the right to make changes without written notice.

605 Shiloh Road • Plano, Texas 75074• 972-212-4800

All rights reserved. No part of this work may be reproduced or transmitted in any form or any means, electronic or mechanical, including photocopying and recording, or by any information storage retrieval system without permission in writing from Air Distribution Technologies

TU-LSC-SB

Basic Unit Dimensions (Continuation)

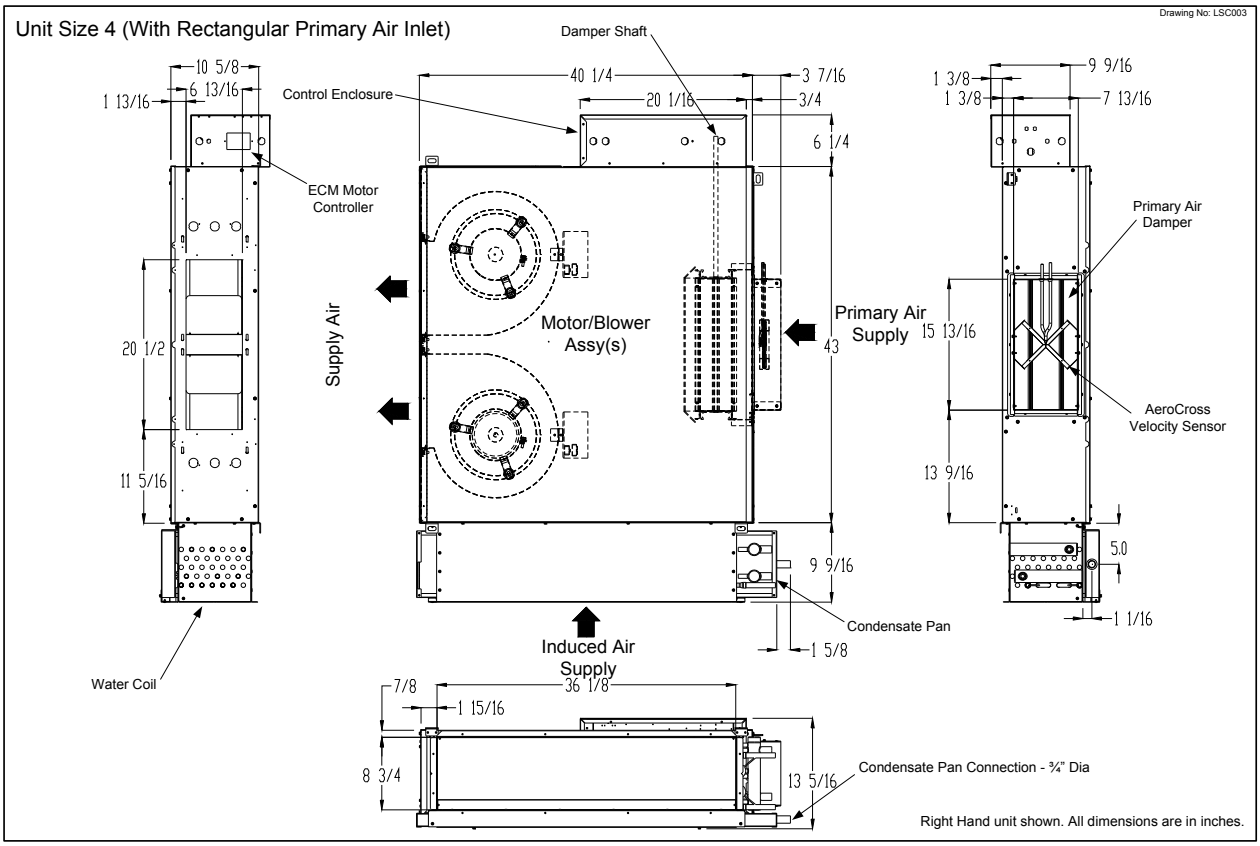

Return Air - Cooling/Heating Coils Flange Connection (No Filter)

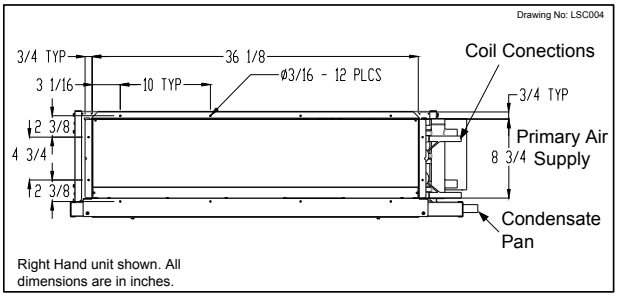

Return Air - Cooling/Heating Coils Flange Connection (No Filter)

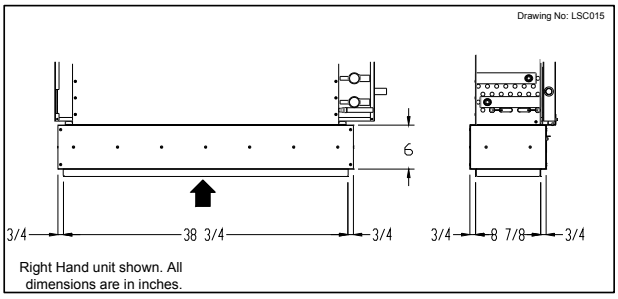

Titus®

Note: This submittal is meant to demonstrate general dimensions of this product. The drawings on this submittal are not meant to detail every aspect of the product with exactness. Drawings are not to scale. TITUS reserves the right to make changes without written notice.

605 Shiloh Road • Plano, Texas 75074• 972-212-4800

All rights reserved. No part of this work may be reproduced or transmitted in any form or any means, electronic or mechanical, including photocopying and recording, or by any information storage retrieval system without permission in writing from Air Distribution Technologies

3

Water Coil(s) Connections

Units with Right Hand Control Panel Check ☑ if provided.

Drawing No: LSC005

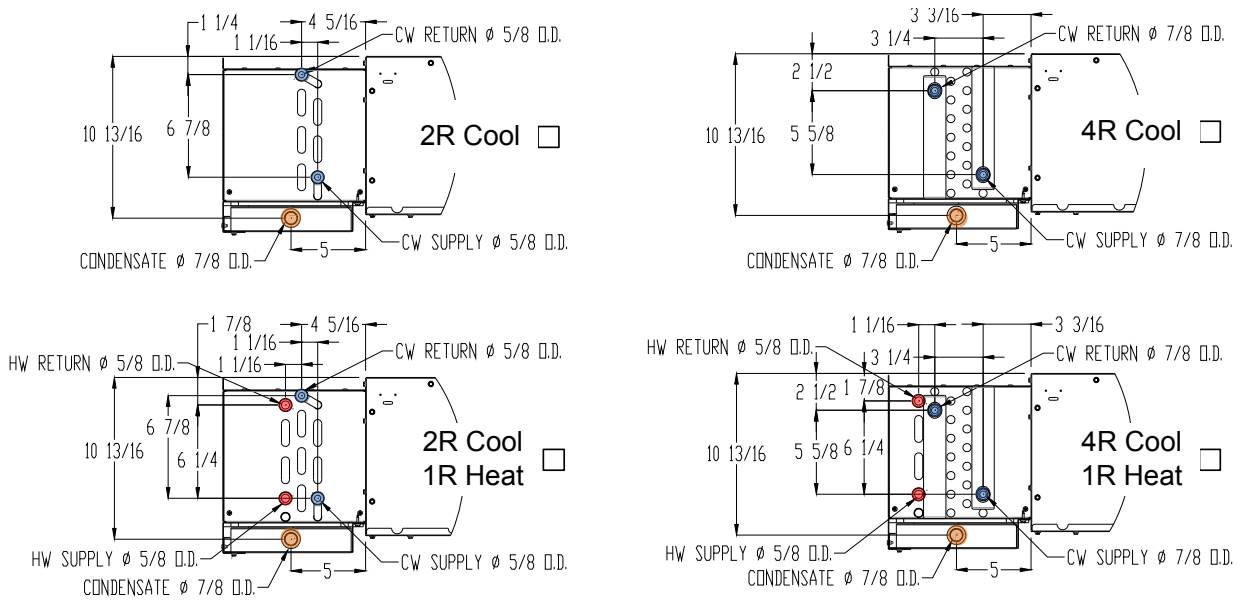

Units with Left Hand Control Panel

Drawing No: LSC006

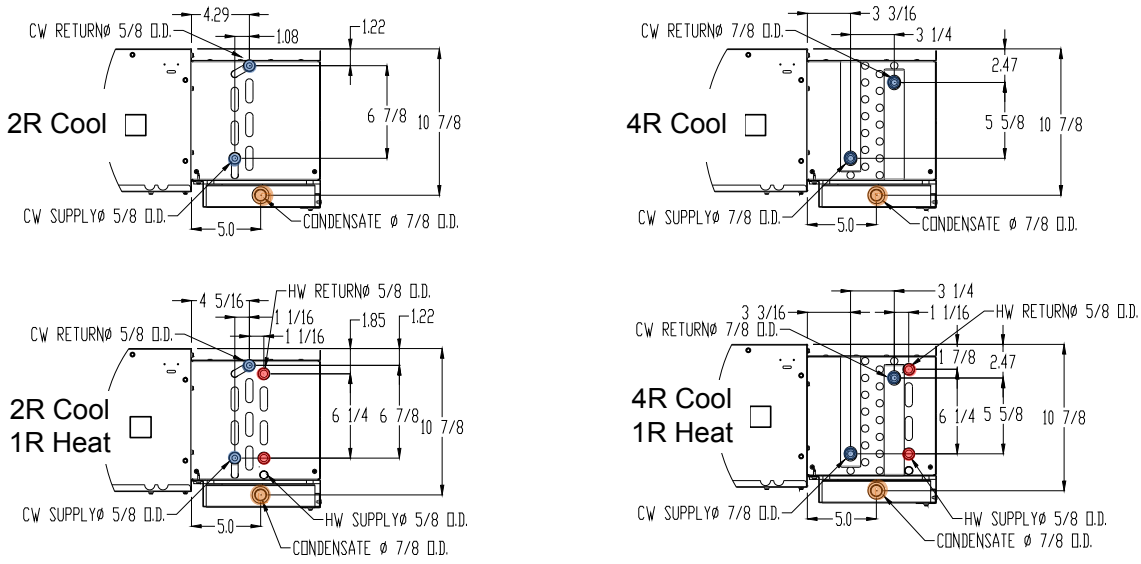

TU-LSC-SB

Optional Accessories

Unit Accessories

Check ☑ if provided.

- ☐ 1" Pleated Filter – Merv 8 Not Ducted
- ☐ 1" Pleated Filter + Spare Filter – Merv 8 Not Ducted
- ☐ 2" Pleated Filter – Merv 8 Not Ducted
- ☐ 2" Pleated Filter + Spare Filter – Merv 8 Not Ducted
- ☐ 1" Pleated Filter – Merv 8 Ducted
- ☐ 1" Pleated Filter + Spare Filter – Merv 8 Ducted
- ☐ 2" Pleated Filter – Merv 8 Ducted
- ☐ 2" Pleated Filter + Spare Filter – Merv 8 Ducted
- ☐ Side Filter Removal – Duct
- ☐ Bottom Filter Removal - Ducted
- ☐ Motor Fuses
- ☐ Slip & Drive Discharge Connections

Drawing No: LSC007

☐ Induced Air Filter Option – NOT Ducted

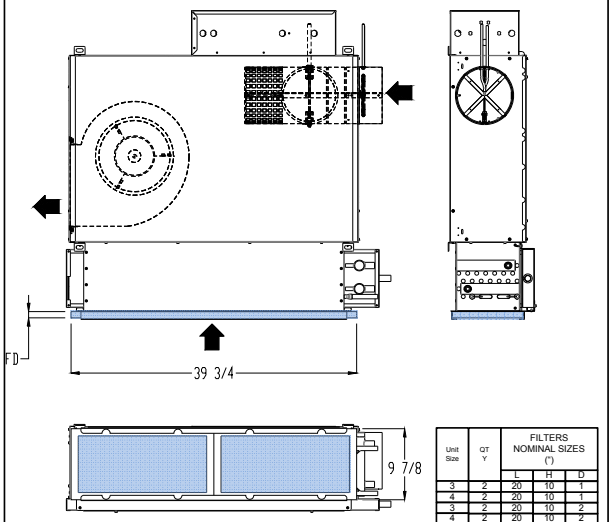

Unit Size	QTY	FILTERS NOMINAL SIZES (")		
		L	H	D
3	2	20	10	1
4	2	20	10	1
3	2	20	10	2
4	2	20	10	2

Unit size 3 shown

Drawing No: LSC008

☐ Induced Air Filter Option – Ducted

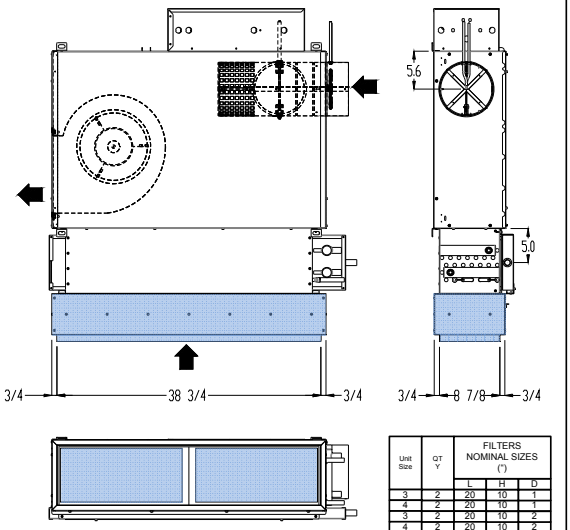

Unit Size	QTY	FILTERS NOMINAL SIZES (")		
		L	H	D
3	2	20	10	1
4	2	20	10	1
3	2	20	10	2
4	2	20	10	2

Unit size 3 shown

Drawing No: LSC009

☐ Hanger Brackets – Size 3 Unit

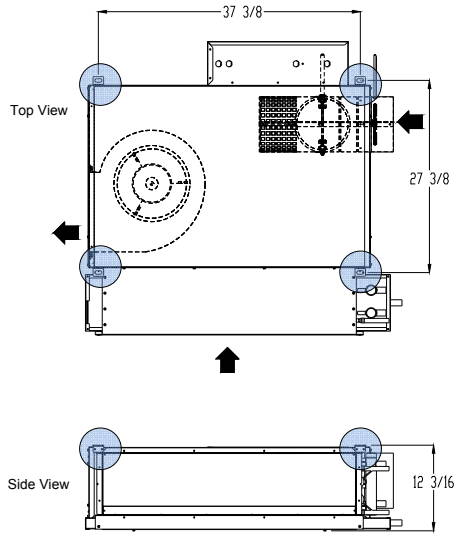

Drawing No: LSC010

☐ Hanger Brackets – Size 4 Unit

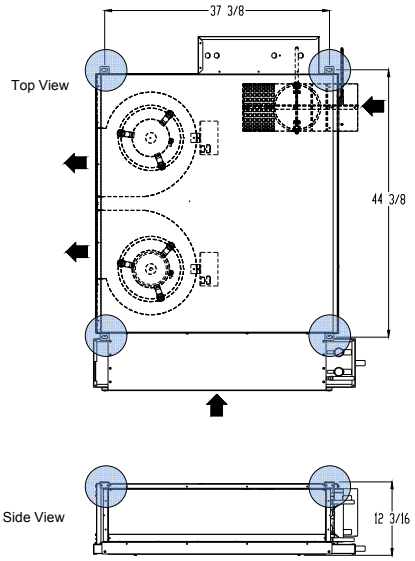

Titus®

Note: This submittal is meant to demonstrate general dimensions of this product. The drawings on this submittal are not meant to detail every aspect of the product with exactness. Drawings are not to scale. TITUS reserves the right to make changes without written notice.

605 Shiloh Road • Plano, Texas 75074• 972-212-4800

All rights reserved. No part of this work may be reproduced or transmitted in any form or any means, electronic or mechanical, including photocopying and recording, or by any information storage retrieval system without permission in writing from Air Distribution Technologies

TU-LSC-SB

Optional Accessories (Continued)

Control Accessories

Check ☑ if provided.

- ☐ Pneumatic Controls
- ☐ Analog Controls
- ☐ Digital Controls
- ☐ FMA controls
- ☐ Controller _____
- ☐ Damper Actuator_____
- ☐ Dust Tight Control Enclosure (Chicago Code)
- ☐ Dust Tight Disconnect SW (Chicago Code)
- ☐ Disconnect Switch-NonFused

Electric Heater

Check ☑ if provided.

- ☐ Power Supply 208V/1Ph/60H
- ☐ Power Supply 240V/1Ph/60Hz
- ☐ Power Supply 277V/1Ph/60Hz
- ☐ Power Supply 208/3Ph/60Hz
- ☐ Power Supply 480/3Ph/60Hz
- ☐ 1 Stage
- ☐ 2 Stages
- ☐ 3 Stages
- ☐ PWM Control
- ☐ 0-10V / 0-20mA
- ☐ 2-10V / 4-20mA
- ☐ Incremental T'Stat
- ☐ Binary
- ☐ 3 Point Floating
- ☐ Mercury Contactors
- ☐ Fuse Block
- ☐ Disconnect Switch - Fused
- ☐ Disconnect Switch - NonFused
- ☐ Manual Reset Secondary CutOut
- ☐ Dust Tight Construction
- ☐ Lynergy Dischage temperature Sensor

Unit Size 3 – Electric Heater Option

Drawing No: LSC013

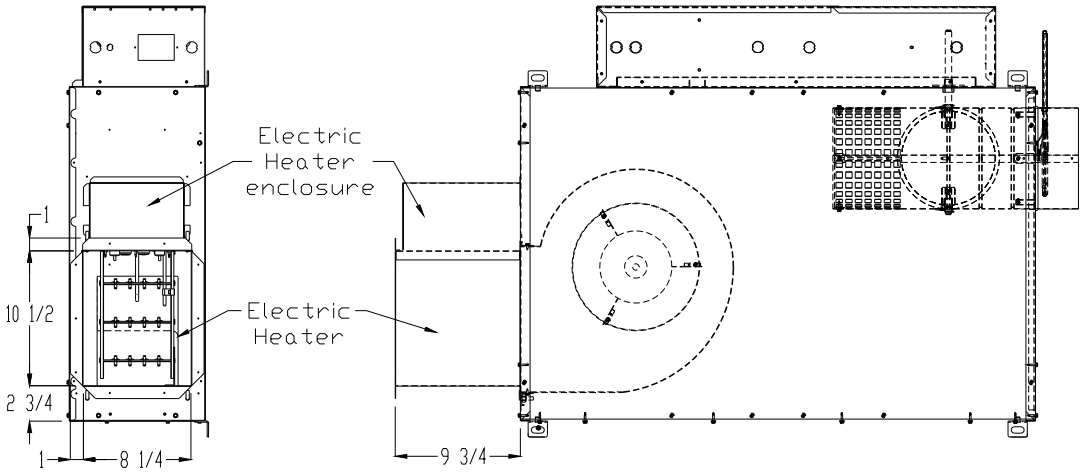

Right Hand unit shown. All dimensions are in inches.

Titus®

Note: This submittal is meant to demonstrate general dimensions of this product. The drawings on this submittal are not meant to detail every aspect of the product with exactness. Drawings are not to scale. TITUS reserves the right to make changes without written notice.

605 Shiloh Road • Plano, Texas 75074• 972-212-4800

All rights reserved. No part of this work may be reproduced or transmitted in any form or any means, electronic or mechanical, including photocopying and recording, or by any information storage retrieval system without permission in writing from Air Distribution Technologies

TU-LSC-SB

Unit Size 4 – Electric Heater Option

Drawing No LSC014

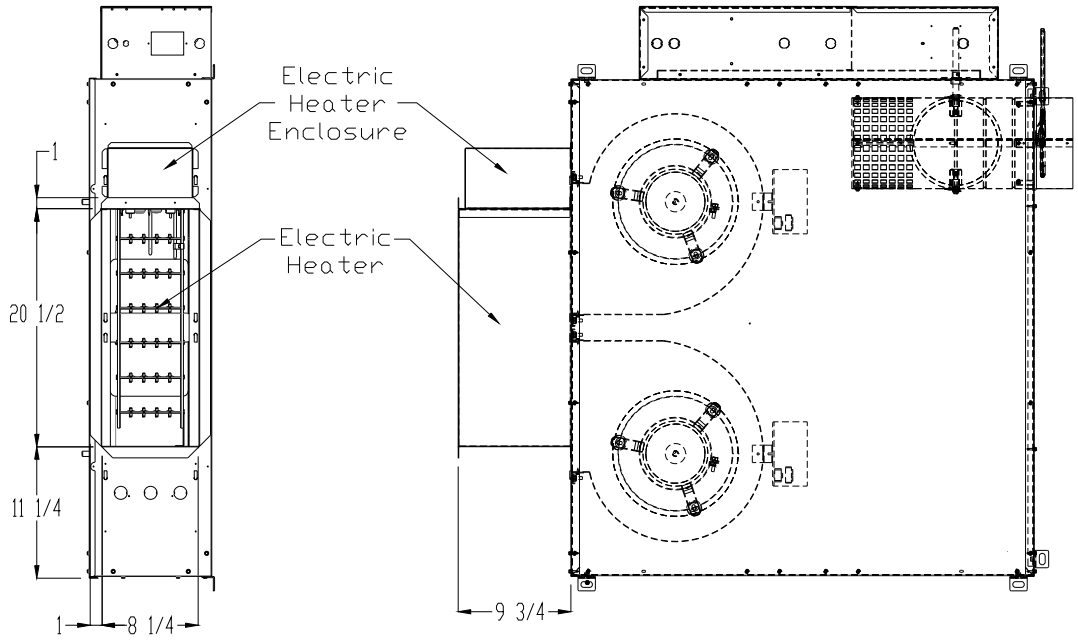

Right Hand unit shown. All dimensions are in inches.

ECM Motor Ratings

Unit Size	Motor hp	277/1/60 FLA	208/1/60 FLA	120/1/60 FLA
3	$^1/_3$	2.3	2.7	4.1
4	2@ $^1/_3$	4.6	5.1	8.6

All fan motors are single phase, same voltage as electric coil (when supplied), with exception that 277 V motors are used with 480V, 3 phase coils (4 wire wye).

FLA = Full Load Amperage, as tested in accordance with UL 1995

Weights

Unit shipping Weights (Lbs)

UNIT SIZE	WEIGHTS (Lbs)					
	Basic Unit	Cooling + Heating Coils				Electric Heater
		2R	2+1R	4R	4+1R	
3	110	14	17	22.5	25.5	23
4	160	14	17	22.5	25.5	23

UNIT SIZE	WEIGHTS (Lbs)					
	Basic Unit	Cooling + Heating Coils				Electric Heater
		2R	2+1R	4R	4+1R	
3	110	16.5	21	28	32.25	23
4	160	16.5	21	28	32.25	23

Notes:
Includes the weight of water in the coils.

Titus®

Note: This submittal is meant to demonstrate general dimensions of this product. The drawings on this submittal are not meant to detail every aspect of the product with exactness. Drawings are not to scale. TITUS reserves the right to make changes without written notice.

605 Shiloh Road • Plano, Texas 75074• 972-212-4800

All rights reserved. No part of this work may be reproduced or transmitted in any form or any means, electronic or mechanical, including photocopying and recording, or by any information storage retrieval system without permission in writing from Air Distribution Technologies

Otis Elevator Company

Pacific Northwest Region
3315 South 116th Street, Suite 149
Seattle, WA 98168
(206) 243-8100 Fax: (206)248-6401

February 11, 2014

Jack Avery
Sellen Construction
227 Westlake Ave N
Seattle, WA 98109

Reference: 1063 Block
Olympia, WA

Dear Jack,

Enclosed is our proposal to provide the elevators for the 1063 Block. We have also included our elevatoring analysis, specification, a sketch of the hoistway for a glass back car and a brochure.

We are proposing the Gen2® Overslung machine room less elevator system. The Gen2® is a space saving, environmentally friendly, superior elevator system with proven performance and reliability. The compact design utilizing coated steel belts in lieu of ropes and sealed bearings provides a smooth quiet riding experience while eliminating 90% of needed lubrication. The regenerative drive and LED lighting with sleep mode is economically friendly, putting power back into the grid while shutting off the lights to reduce power usage when the elevator is parked.

The Gen2® has also proven to be one of our most reliable products. It has contributed to a Puget Sound market leading service call rate of 2 - 2.25 requests for service per unit per year for Otis Seattle.

We have also provided an alternate to provide our Compass® Destination Dispatching system. For this project the benefit of Compass will be to help direct passengers to the correct floor for conferences and other meetings as well as control access to secure floors. We would be happy to discuss this in further detail.

Thank you for the opportunity to partner with Sellen Construction on this project. We are looking forward to contributing to the success of this project.

Sincerely,
OTIS ELEVATOR COMPANY

Joel J. Kallman

Joel Kallman

1063 Block Elevator Analysis

1063 Block

Prepared For: Sellen Construction

Prepared By: Otis Elevator Company

Date: 2/11/2014

This work, and the information contained herein, is delivered on the express condition that it is not to be used, reproduced, distributed, or disclosed by or to any person or agency, except for, or on behalf of Otis, or as authorized by Otis in writing.

Table of Contents

Simulation Results 4
Comp_1063 Block Up Peak Simulation Heavy Traffic 1 4
Performance Metric Table 5
Lobby Information Table 6
Time to Destination Distribution Chart 7
Waiting Time Distribution Chart 8
In Car Time Distribution Chart 9
Practical Handling Capacity Chart (RSR) 10
Practical Handling Capacity Chart (Compass) 11
Up Waiting Passenger Queue Chart (RSR) 12
Up Waiting Passenger Queue Chart (Compass) 13
Traffic Pattern – Percent Population Requesting Service Over Time 14
Comp_1063 Block Two Way Simulation 15
Performance Metric Table 16
Lobby Information Table 17
Time to Destination Distribution Chart 18
Waiting Time Distribution Chart 19
In Car Time Distribution Chart 20
Practical Handling Capacity Chart (RSR) 21
Practical Handling Capacity Chart (Compass) 22
Up Waiting Passenger Queue Chart (RSR) 23
Up Waiting Passenger Queue Chart (Compass) 24
Traffic Pattern – Percent Population Requesting Service Over Time 25
Appendix 27
Recommended Values 27
Definition Of Terms 28
Metric Definitions 28

Simulation Results

Comp_1063 Block Up Peak Simulation Heavy Traffic 1

Standard Inputs for Comp_1063 Block Up Peak Simulation Heavy Traffic 1

Building Name: 1063 Block	Group Name: Group1	Pattern Name: Library-Up Heavy
Revision Name: Revision 2 Simulation Analysis	Elevators: 3	Number of Runs: 5
	Dispatcher: Comparing RSR-COMPASS (Lobby)	
Building Floors: 5	Capacity [lbs.]: 3500	
Main Lobby: 1	Max Boarding: 18	Passengers Using Main Lobby: 574
2nd Lobby: NA	Speed [f/min]: 350.00	Passengers Using 2nd Lobby: 0
3rd Lobby: NA	Acceleration [f/s2]: 2.6	Passengers Using 3rd Lobby: 0
Restaurant 1: NA	Jerk [f/s3]: 4.6	Passengers Using Restaurant 1:0
Restaurant 2: NA	Group Population: 591	Passengers Using Restaurant 2:0
Motor Generator Set: False	Door Opening/Closing Time [S]: 1.6/2.5	

Standard Outputs for Comp_1063 Block Up Peak Simulation Heavy Traffic 1

Performance Metric Table

Items	RSR	Compass	Wait Time	RSR	Compass
Passenger	574	574	Ave Wait Time [S]	4.0	8.0
Hall Calls	115	N/A	Max Wait Time [S]	78.8	67.1
Car Call	297	N/A	Max Wait Time Floor	1 UP,1 DOWN	1 UP,1 DOWN
Ave Stops Per Passenger	0.5	0.2	*Less Than 30 S Wait Time [%]	97.9	94.7
Max Stops per Passenger	2.4	2.0	*Less Than 60 S Wait Time [%]	99.6	99.8
			*Less Than 90 S Wait Time [%]	100.0	100.0
In Car Time	**RSR**	**Compass**	**Time To Destination**	**RSR**	**Compass**
Ave In Car Time [S]	31.4	23.6	Ave Time to Destination [S]	35.4	31.6
*Max In Car Time [S]	78.3	54.8	Max Time to Destination [S]	102.2	92.9
*Less Than 90 S In Car Time [%]	99.9	100.0	*Less Than 90 S Time to Destination [%]	99.6	99.9
*Less Than 120 S In Car Time [%]	100.0	100.0	*Less Than 120 S Time to Destination [%]	100.0	100.0
*Less Than 180 S In Car Time [%]	100.0	100.0	*Less Than 180 S Time to Destination [%]	100.0	100.0

*Because the maximum value presented is an average of maximum values over multiple runs, the value may not intuitively correlate with the relevant distribution values, which are also averages of multiple runs.

Lobby Information Table

Items	RSR	Compass	Items	RSR	Compass
LOBBY Passenger	574	574	Ave In Car Time (From Lobby)	31.4	23.6
LOBBY Hall Calls (Multi) [Times]	0	61	*Max In Car Time (From Lobby)	78.3	54.8
LOBBY KeyPad Entry [Times]	0	574	Ave Stops/Pass. Trip (From LBY) [Times]	0.5	0.2
LOBBY Ave Wait Time [S]	4.0	8.0	Max Stops/Pass. Trip(From LBY) [Times]	2.4	2.0
*LOBBY Max Wait Time [S]	78.8	67.1	Ave Car% Full (From Lobby)	12.9	10.6
LOBBY Max Wait Queue	10.0	14.0	Max Car% Full (From Lobby)	66.1	64.3
LOBBY Ave Time to Destination [S]	35.4	31.6	Ave Car% Full (To Lobby)	1.2	0.0
*LOBBY Max Time to Destination [S]	102.2	92.9	Ave Passengers From LB	9	2
Ave LB Call Times	3	1	Max Passengers at LB	10	14

*Because the maximum value presented is an average of maximum values over multiple runs, the value may not intuitively correlate with the relevant distribution values, which are also averages of multiple runs.

Time to Destination Distribution Chart

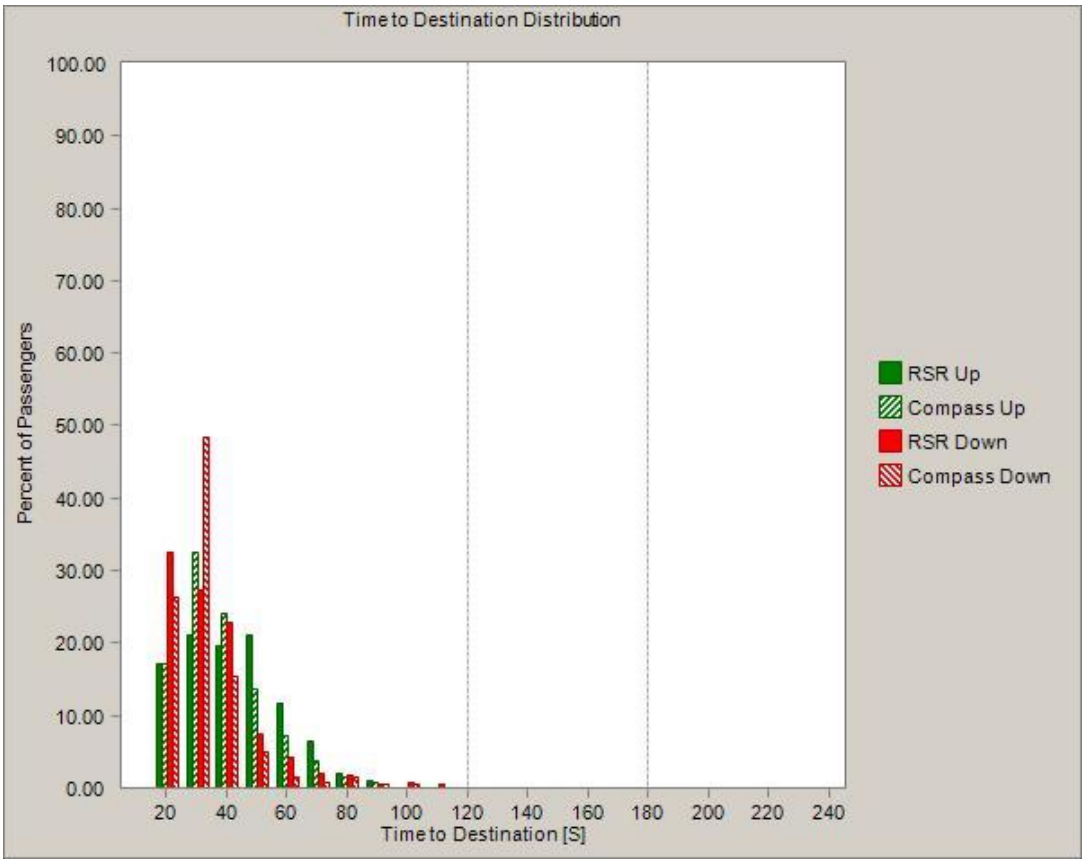

Waiting Time Distribution Chart

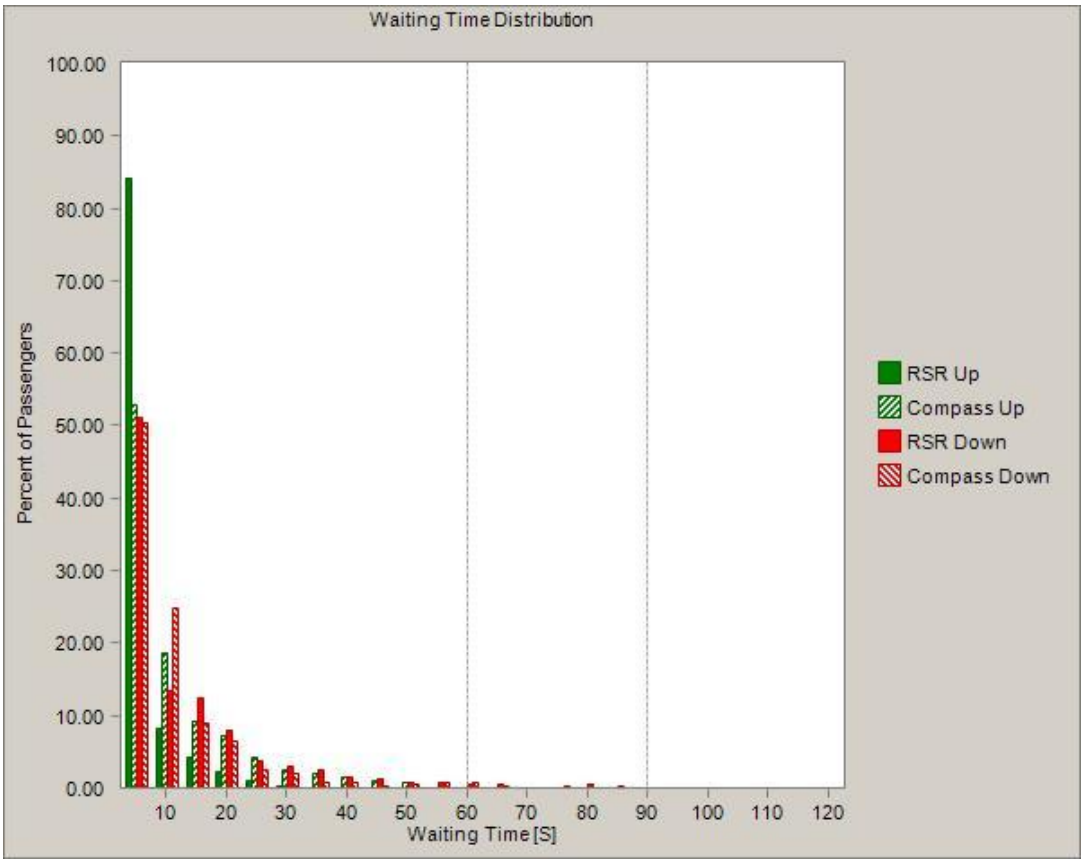

In Car Time Distribution Chart

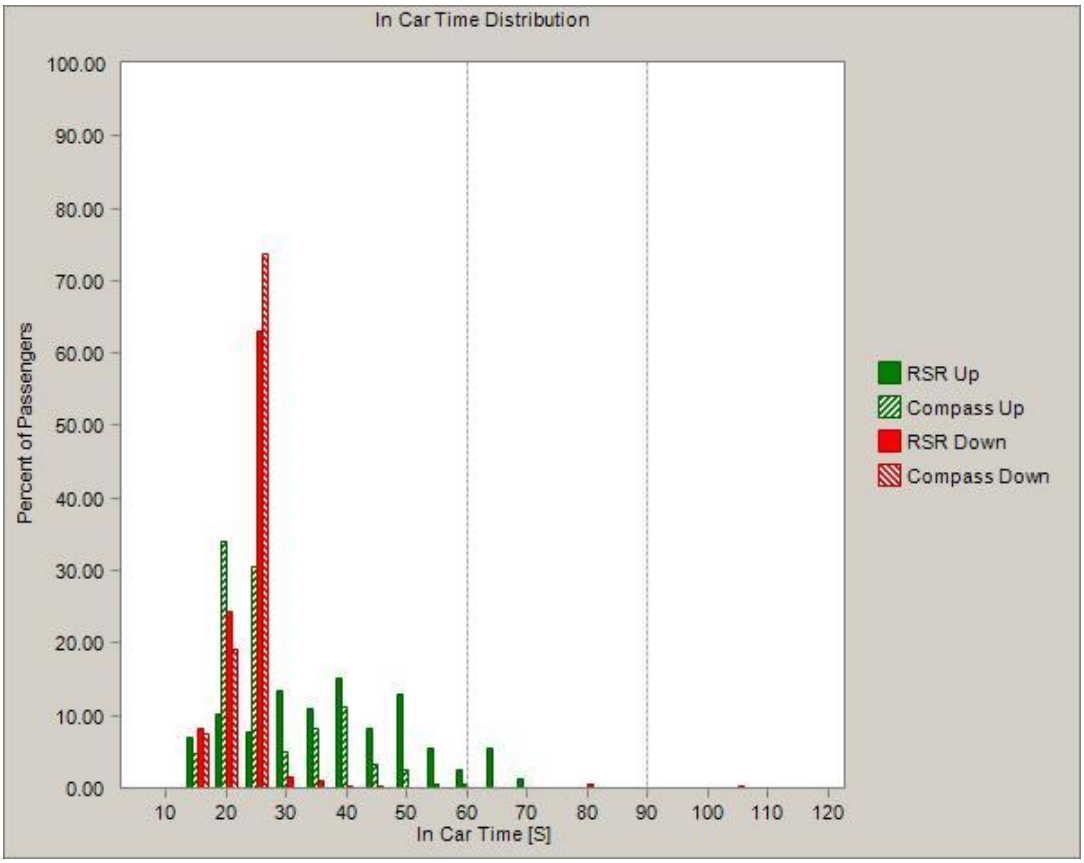

Practical Handling Capacity Chart (RSR)

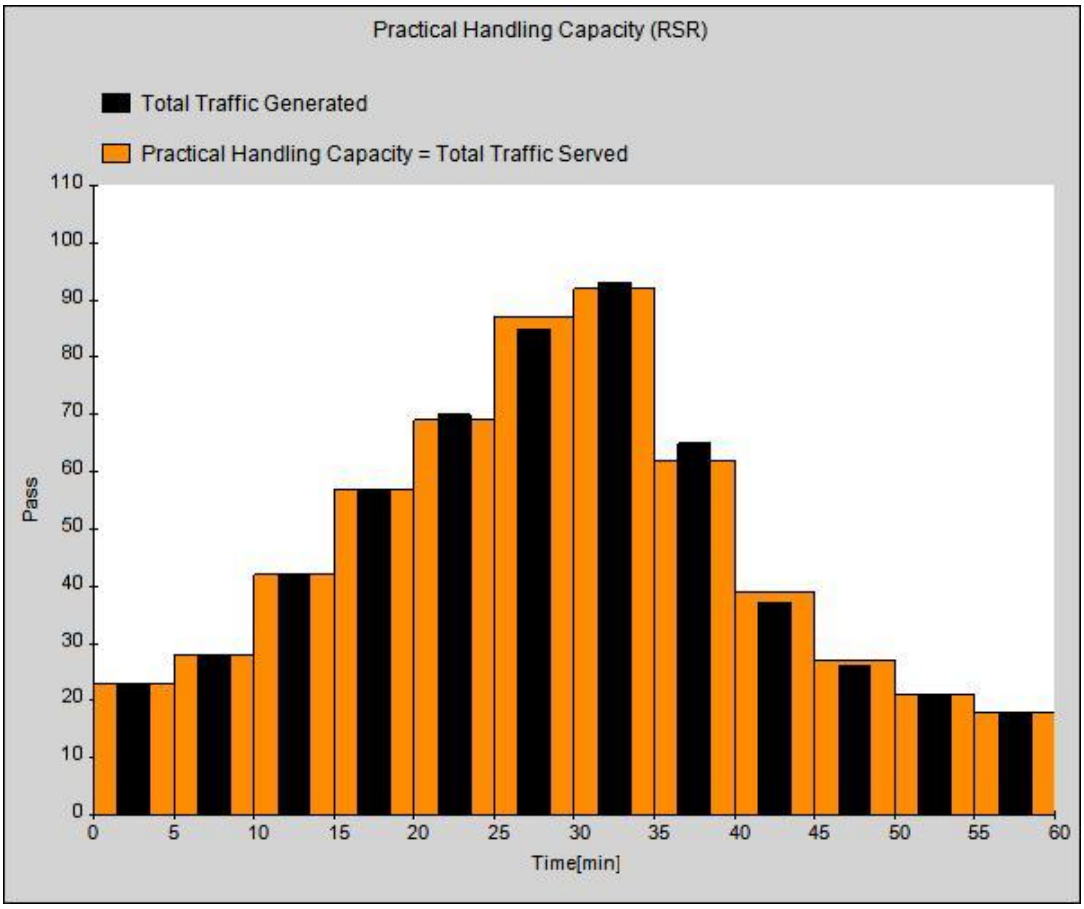

Practical Handling Capacity Chart (Compass)

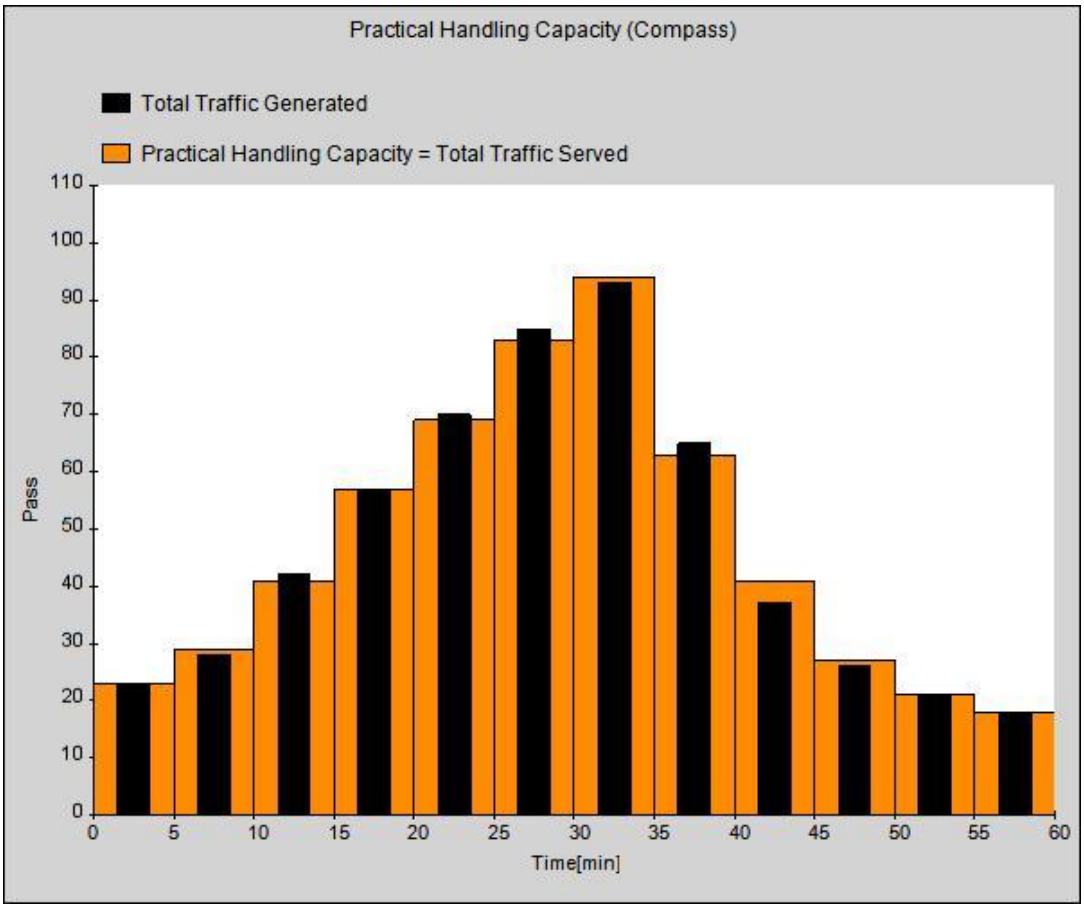

Up Waiting Passenger Queue Chart (RSR)

Max Waiting Queue 10 [People]

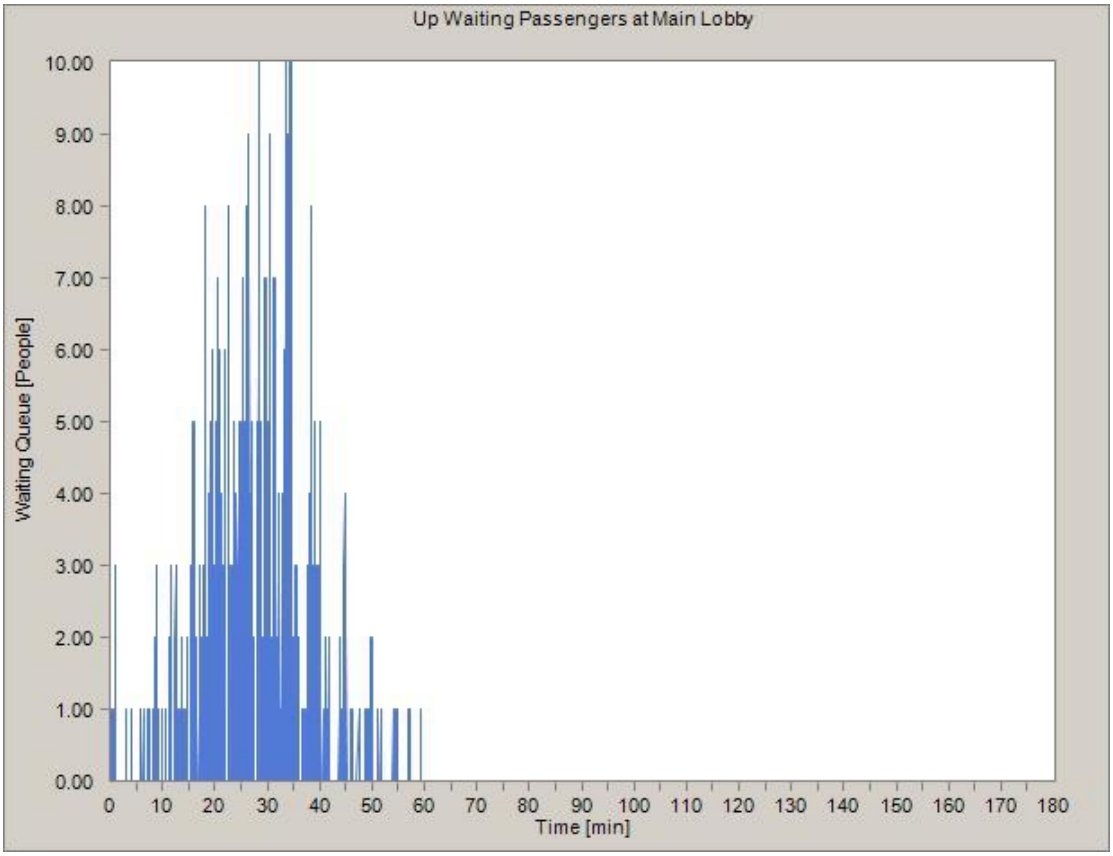

Up Waiting Passenger Queue Chart (Compass)

Max Waiting Queue 14 [People]

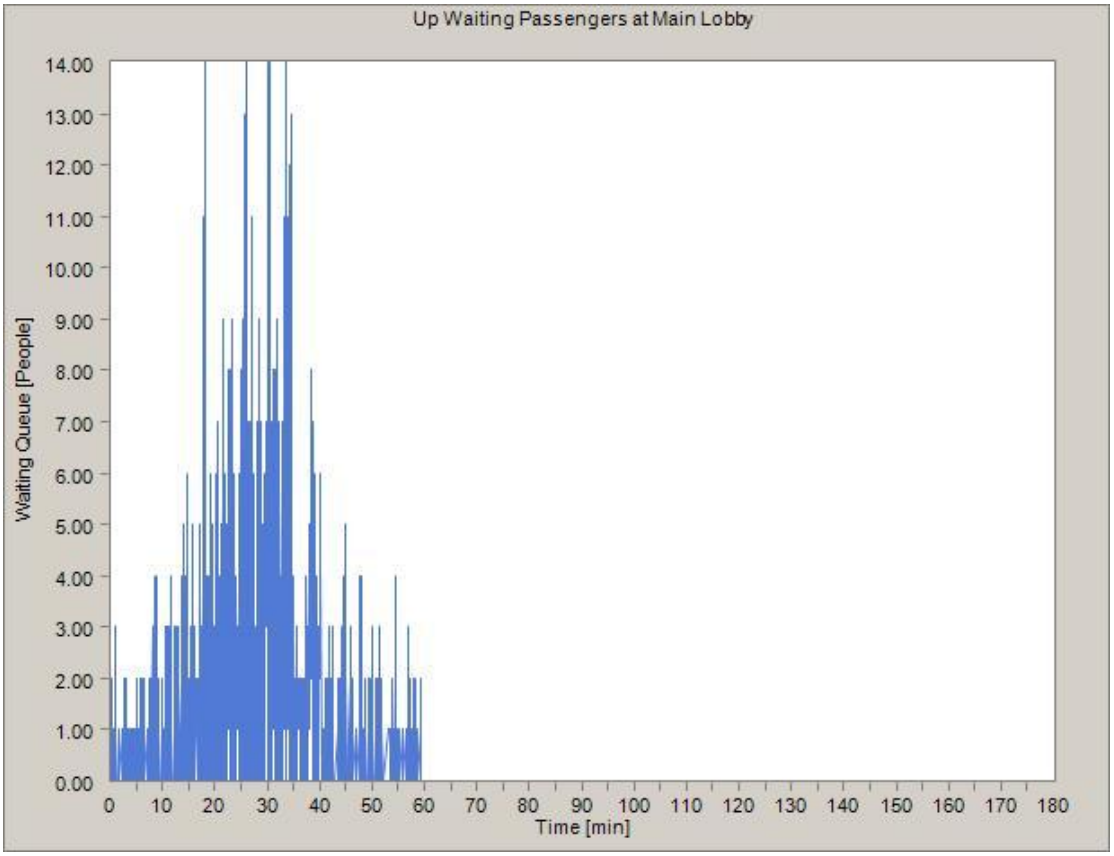

Traffic Pattern – Percent Population Requesting Service Over Time

Simulated result is obtained by the pattern described below. Note that dispatching results can very significantly depending on the traffic pattern used for evaluation.

Pattern Name: Library_Up Heavy

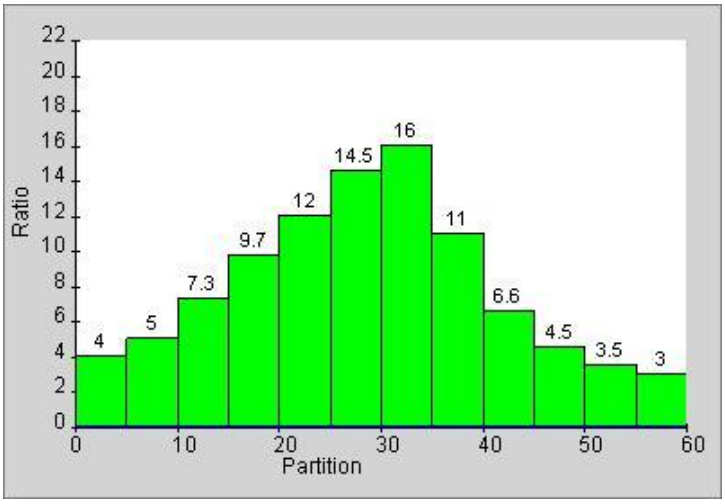

Partition	%Up	%Down	%Interfloor
0-5	4.0	0.0	0.0
5-10	5.0	0.0	0.0
10-15	7.3	0.0	0.0
15-20	9.7	0.0	0.0
20-25	12.0	0.0	0.0
25-30	14.5	0.0	0.0
30-35	16.0	0.0	0.0
35-40	11.0	0.0	0.0
40-45	6.6	0.0	0.0
45-50	4.5	0.0	0.0
50-55	3.5	0.0	0.0
55-60	3.0	0.0	0.0

Comp_1063 Block Two Way Simulation

Standard Inputs for Comp_1063 Block Two Way Simulation

Building Name: 1063 Block	Group Name: Group1	Pattern Name: Library_TwoWay Heavy
Revision Name: Revision 2 Simulation Analysis	Elevators: 3	Number of Runs: 5
	Dispatcher:Compare RSR-COMPASS (Lobby)	
Building Floors: 5	Capacity [lbs]: 3500	
Main Lobby: 1	Max Boarding: 18	Passengers Using Main Lobby: 1100
2nd Lobby: NA	Speed [f/min]: 350.00	Passengers Using 2nd Lobby: 0
3rd Lobby: NA	Acceleration [f/s2]: 2.6	Passengers Using 3rd Lobby: 0
Restaurant 1: NA	Jerk [f/s3]: 4.6	Passengers Using Restaurant 1:0
Restaurant 2: NA	Group Population: 591	Passengers Using Restaurant 2:0
Motor Generator Set: False	Door Opening/Closing Time [S]: 1.6/2.5	

Standard Outputs for Comp_1063 Block Two Way Simulation

Performance Metric Table

Items	RSR	Compass	Wait Time	RSR	Compass
Passenger	1100	1100	Ave Wait Time [S]	8.4	8.3
Hall Calls	606	N/A	Max Wait Time [S]	69.0	66.0
Car Call	690	N/A	Max Wait Time Floor	0 UP,4 DOWN	1 UP,2 DOWN
Ave Stops Per Passenger	0.3	0.3	*Less Than 30 S Wait Time [%]	94.3	94.7
Max Stops per Passenger	2.0	2.0	*Less Than 60 S Wait Time [%]	99.8	99.9
			*Less Than 90 S Wait Time [%]	100.0	100.0
In Car Time	**RSR**	**Compass**	**Time To Destination**	**RSR**	**Compass**
Ave In Car Time [S]	24.1	24.0	Ave Time to Destination [S]	32.5	32.3
*Max In Car Time [S]	52.2	53.2	Max Time to Destination [S]	91.8	95.1
*Less Than 90 S In Car Time [%]	100.0	100.0	*Less Than 90 S Time to Destination [%]	99.9	99.9
*Less Than 120 S In Car Time [%]	100.0	100.0	*Less Than 120 S Time to Destination [%]	100.0	100.0
*Less Than 180 S In Car Time [%]	100.0	100.0	*Less Than 180 S Time to Destination [%]	100.0	100.0

*Because the maximum value presented is an average of maximum values over multiple runs, the value may not intuitively correlate with the relevant distribution values, which are also averages of multiple runs.

Lobby Information Table

Items	RSR	Compass	Items	RSR	Compass
LOBBY Passenger	550	550	Ave In Car Time (From Lobby)	24.4	24.5
LOBBY Hall Calls (Multi) [Times]	0	4	*Max In Car Time (From Lobby)	51.0	51.6
LOBBY KeyPad Entry [Times]	0	550	Ave Stops/Pass. Trip (From LBY) [Times]	0.3	0.3
LOBBY Ave Wait Time [S]	5.2	6.4	Max Stops/Pass. Trip(From LBY) [Times]	2.0	2.0
*LOBBY Max Wait Time [S]	44.1	56.8	Ave Car% Full (From Lobby)	7.9	8.0
LOBBY Max Wait Queue	7.0	9.0	Max Car% Full (From Lobby)	36.5	41.7
LOBBY Ave Time to Destination [S]	29.7	30.9	Ave Car% Full (To Lobby)	8.5	8.2
*LOBBY Max Time to Destination [S]	77.6	90.7	Ave Passengers From LB	0	0
Ave LB Call Times	0	0	Max Passengers at LB	7	9

*Because the maximum value presented is an average of maximum values over multiple runs, the value may not intuitively correlate with the relevant distribution values, which are also averages of multiple runs.

Time to Destination Distribution Chart

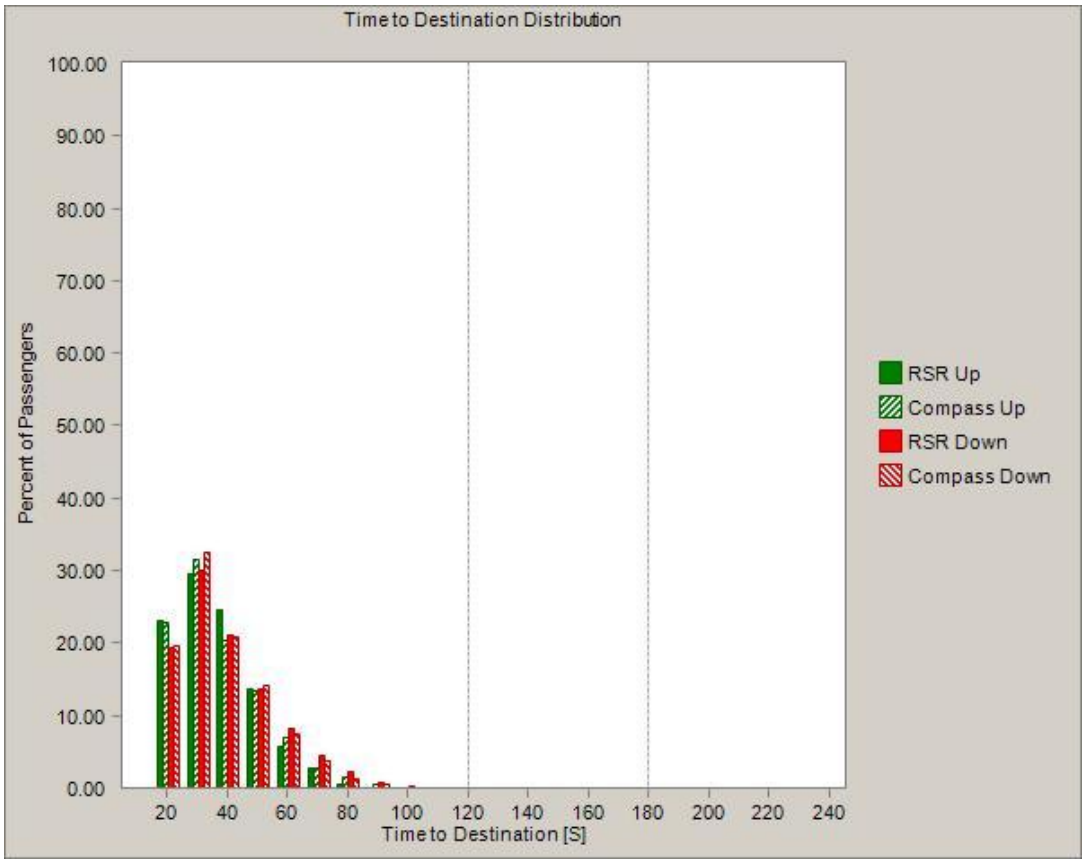

Waiting Time Distribution Chart

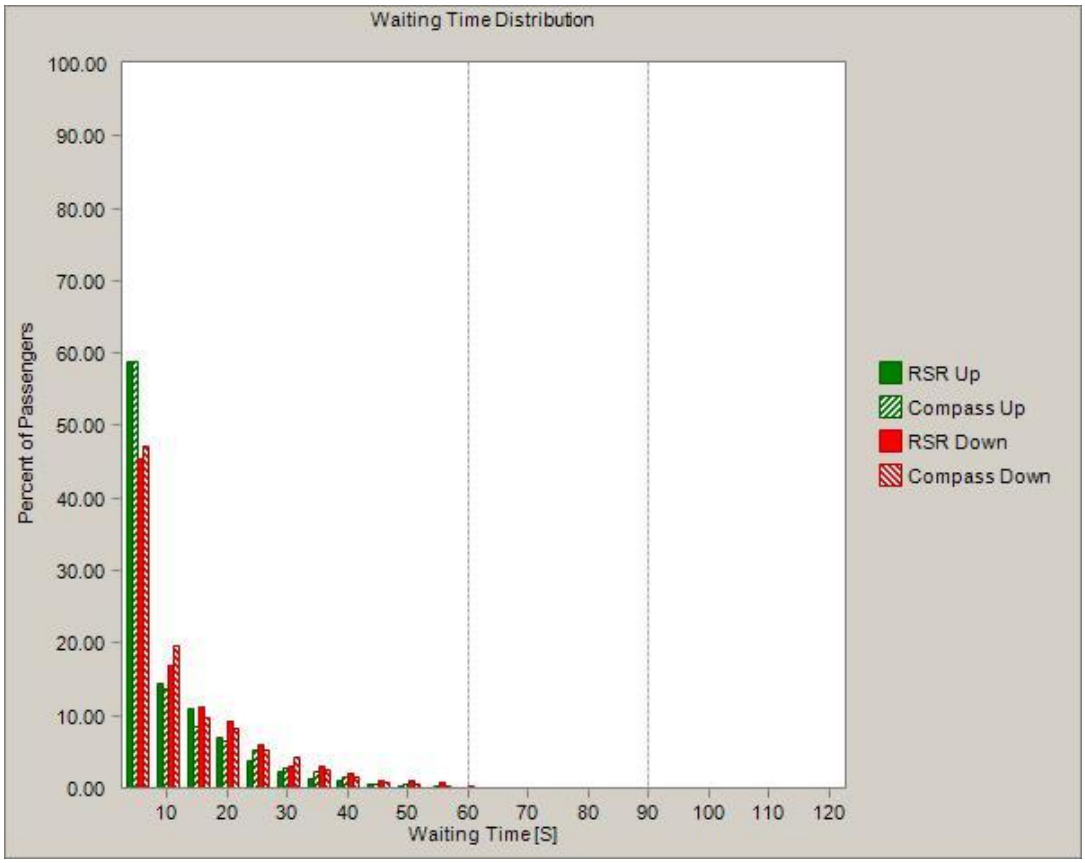

In Car Time Distribution Chart

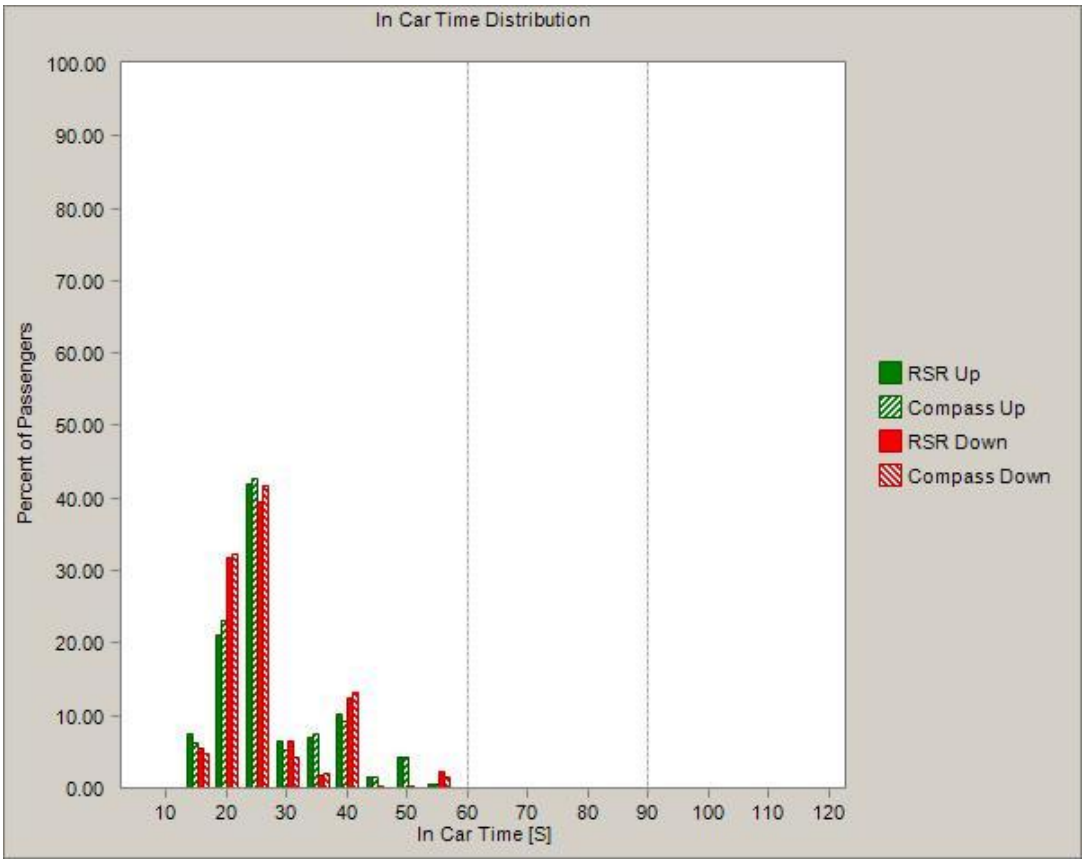

Practical Handling Capacity Chart (RSR)

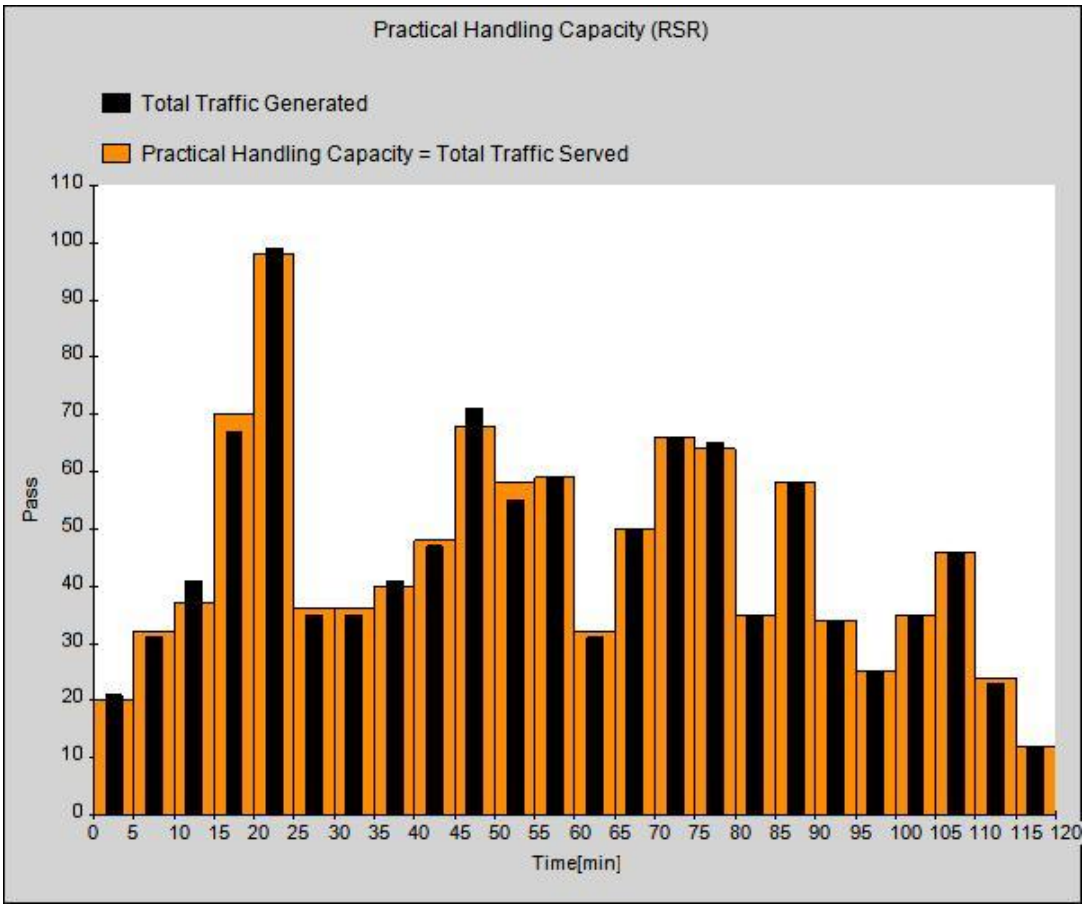

Practical Handling Capacity Chart (Compass)

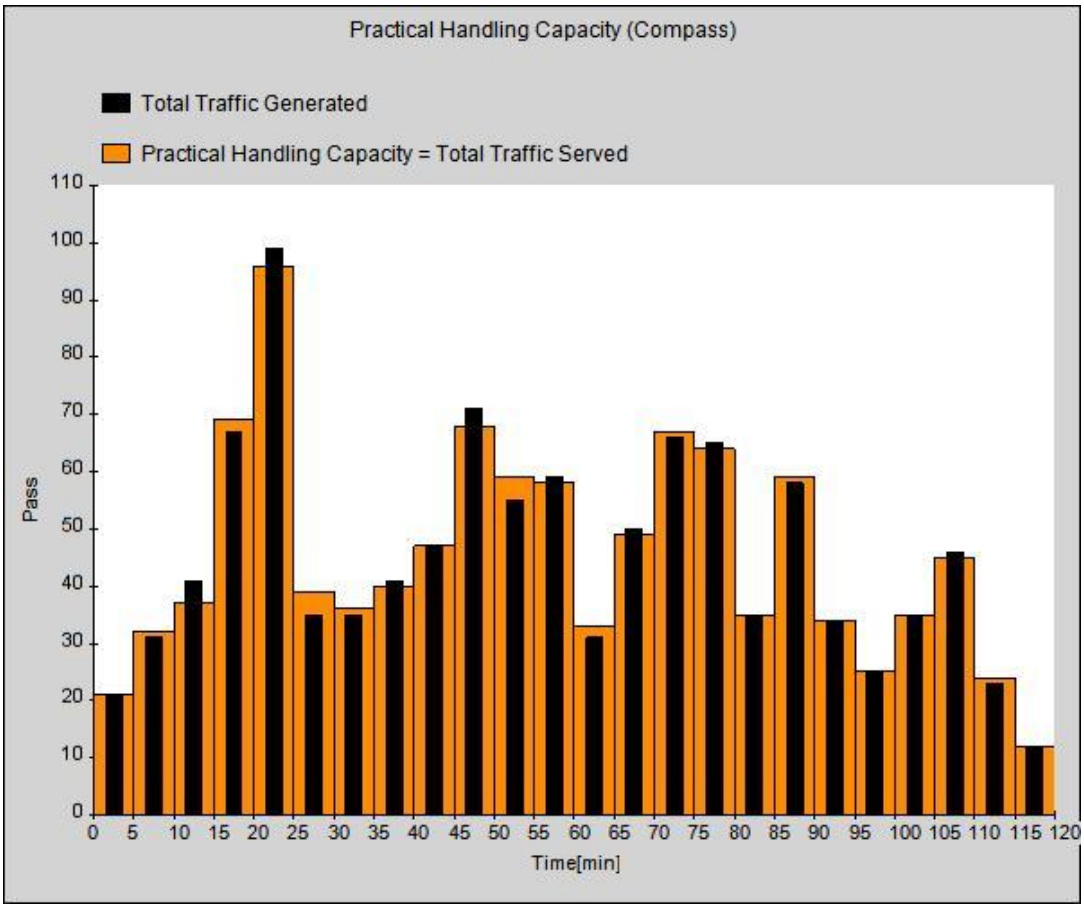

Up Waiting Passenger Queue Chart (RSR)

Max Waiting Queue 7 [People]

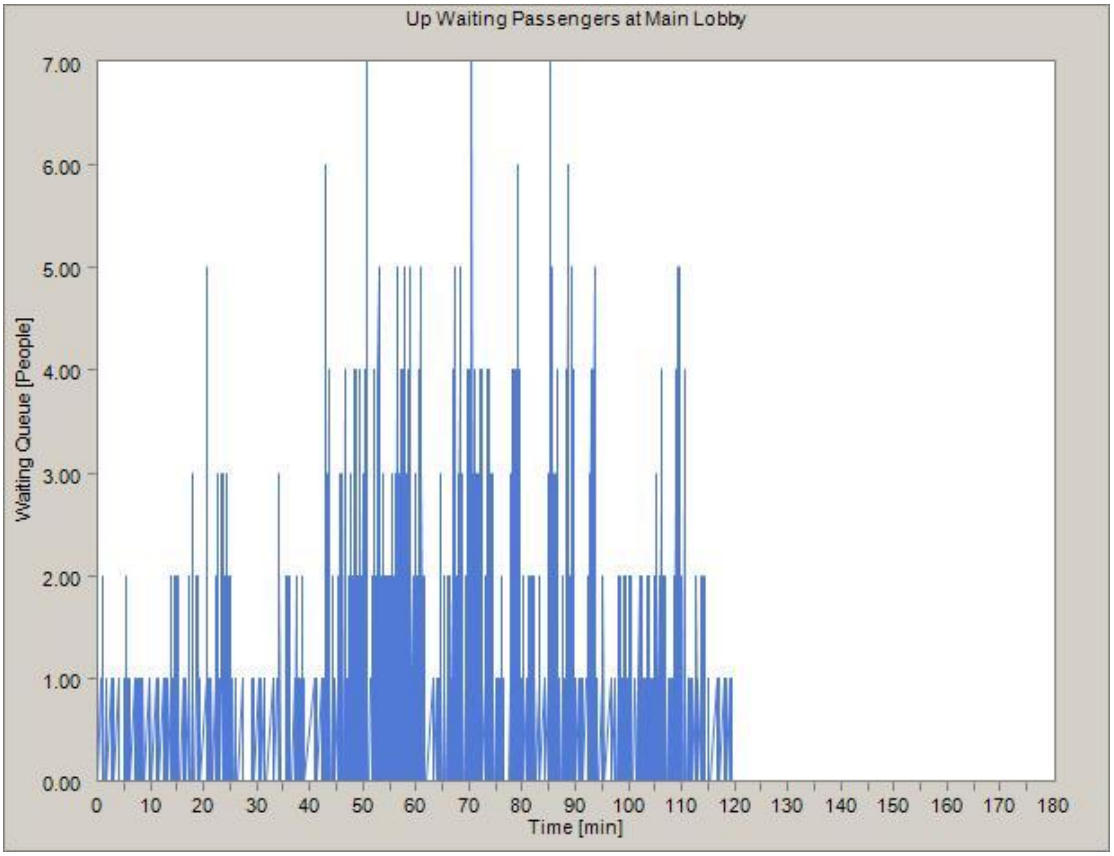

Up Waiting Passenger Queue Chart (Compass)

Max Waiting Queue 9 [People]

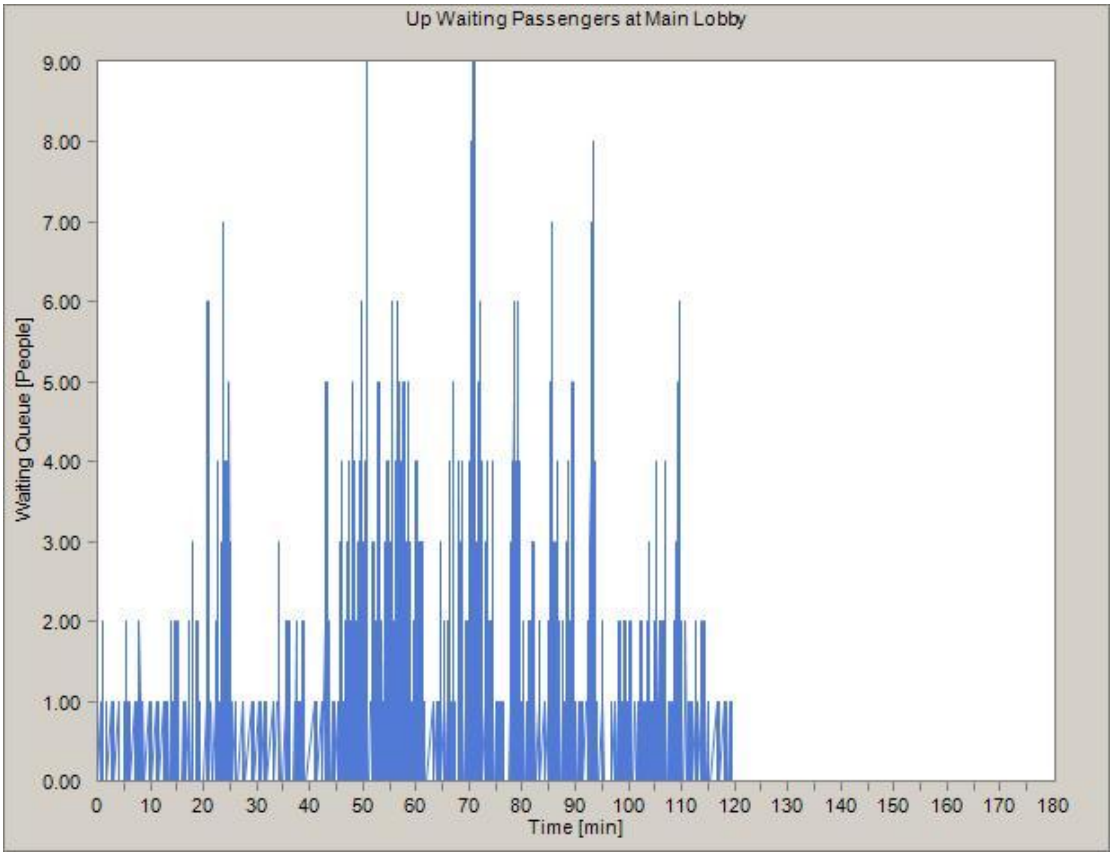

Traffic Pattern – Percent Population Requesting Service Over Time

Simulated result is obtained by the pattern described below. Note that dispatching results can very significantly depending on the traffic pattern used for evaluation.

Pattern Name: Library_TwoWay Heavy

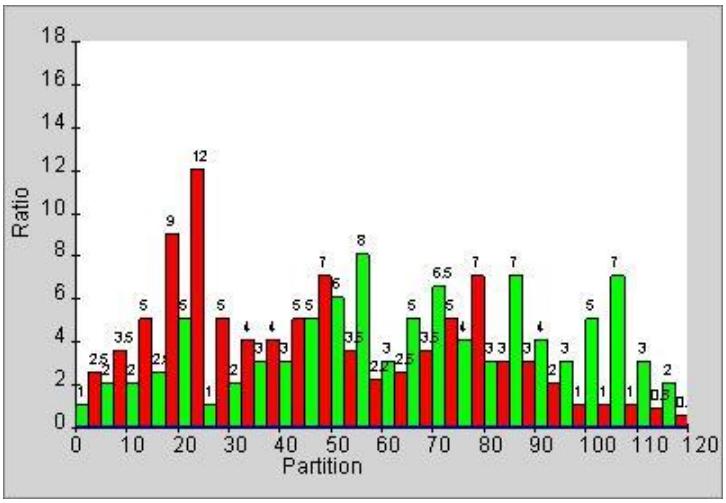

Partition	%Up	%Down	%Interfloor
0-5	1.0	2.5	0.0
5-10	2.0	3.5	0.0
10-15	2.0	5.0	0.0
15-20	2.5	9.0	0.0
20-25	5.0	12.0	0.0
25-30	1.0	5.0	0.0
30-35	2.0	4.0	0.0
35-40	3.0	4.0	0.0
40-45	3.0	5.0	0.0
45-50	5.0	7.0	0.0
50-55	6.0	3.5	0.0
55-60	8.0	2.2	0.0
60-65	3.0	2.5	0.0
65-70	5.0	3.5	0.0
70-75	6.5	5.0	0.0
75-80	4.0	7.0	0.0
80-85	3.0	3.0	0.0
85-90	7.0	3.0	0.0
90-95	4.0	2.0	0.0
95-100	3.0	1.0	0.0
100-105	5.0	1.0	0.0
105-110	7.0	1.0	0.0
110-115	3.0	0.8	0.0
115-120	2.0	0.5	0.0

Appendix

Recommended Values

Metric	Otis Recommended Values
Average Wait Time	20 – 25 S
% Waits < 30 S	
% Waits < 45 S	
% Waits < 60 S	
Average Time to Destination	90 – 110 S
% Waits < 90 S	
% Waits < 120 S	
% Waits < 180 S	

Definition Of Terms

Metric Definitions

AWT is Average Wait Time and represents the average of the wait time for each passenger. A passenger's wait time is measured from the time he or she enters the queue until the responding car starts to open its doors at the passenger's origin floor. (In destination systems the time entering the queue corresponds to the time that the passenger uses the destination entry device.)

ATTD is Average Time To Destination and represents the average of the service time for each passenger. A passenger's time to destination, also known as Service Time, is measured from the time he or she enters the queue until the responding car starts to open its doors at the passenger's destination floor. (In destination systems the time entering the queue corresponds to the time that the passenger uses the destination entry device.)

Avg. Stops is the term used to describe the number of stops, in addition to his or her own destination stop, that a passenger will make during the trip to his or her destination, on average.

Max Queue is the term used to describe the greatest number of people waiting in the lobby at any one time during the traffic period. For ten run averages, this number is the average of the max queue of each of the ten runs.