KITCHEN EQUIPMENT SCHEDULE

ITEM	QTY	DESCRIPTION	IN CONTRACT (CF - CI)	NOT IN CONTRACT (GF - GI)
1		TRAY / SILVER DISPENSER		■
2		GLASS / CUP / BOWL DISPENSER		■
3		DRINK STAND	■	
4		N/A		
5		JUICE DISPENSER (DOUBLE)		■
6		COFFEE URN (TRIM)	■	
7		ICE DISPENSER W/ STORAGE BIN	■	
8		MOBILE FOOD COUNTER		■
9-14		N/A		
15		STAINLESS STEEL COUNTER	■	
16		COLD FOOD PAN UNIT (DROP IN)	■	
17		HOT FOOD PAN UNIT (DROP IN)	■	
18		SOLID RIBBED TRAY SLIDE	■	
19		FOOD WARMING CABINET	■	
20		GRIDDLE	■	
21		VENTILATION HOOD (GREASE)	■	
22		N/A		
23		N/A		
24		N/A		
25		DISH TABLE (SOILED)	■	
26		GARBAGE DISPOSER	■	
27		PRE-RINSE SPRAY	■	
28		SILVERWARE SOAK SINK		■
29		SLANTED WALL SHELF	■	
30		DISHWASHER	■	
31		VENTILATION HOOD (CONDENSATE)	■	
32		DISH TABLE (CLEAN)	■	
33		SINK POT & PAN (3 COMPARTMENT)	■	
34		GARBAGE DISPOSAL	■	
35		PRE-RINSE SPRAY	■	
36		BOOSTER HEATER (9 kw)	■	
37		HOT WATER BOOSTER HEATER	■	
38		VENTILATION HOOD (CONDENSATE)	■	
39		TROUGH DRAIN W/ GRATE	■	
40		CAN WASH / RINSE	■	

41	HOT WATER BOOSTER HEATER (DW)		
42	TOASTER		
43	N/A		
44	N/A		
45	STEAMED JACKET KETTLE		
46	PAN FRYING & BRASING (TILT TOP)		
47	WATER FILLER		
48	RANGE W/ OVEN		
49	STACK OVEN FORCED CONVECTION		
50	VENTILATION HOOD (GREASE)		
51	VENTILATION HOOD (CONDENSATE)		
52	TROUGH DRAIN W/ GRATE		
53	VEGETABLE PREP. COUNTER W/ SINK		
54	GARBAGE DISPOSER		
55	POTATO PEELER		
56	WALL SHELF		
57	ICE MAKER W/ STORAGE BIN		
58	HAND SINK		
59	FIXED WORK TABLE		
60	UTENSIL RACK		
61	N/A		
62	MOBILE TABLE		
63	MIXER		
64	MIXING MACHINE TABLE W/ ACCESSORY RACK		
65	CAN OPENER		
66	SLICER		
67	FREEZER		
68	VEGETABLE REFRIGERATOR		
69	DAIRY REFRIGERATOR		
70	N/A		
71	FOOD RACK		
72	FOOD RACK		
73	CONDIMENT LOCKERS		
74	POT AND PAN CART		
75	AIR CURTAIN FLY CONTROL (AS REQ'D)		
76	UNDER COUNTER SHELF		
77	N/A		

PIERCE COUNTY READINESS CENTER
1300 SQFT "SMALL KITCHEN"

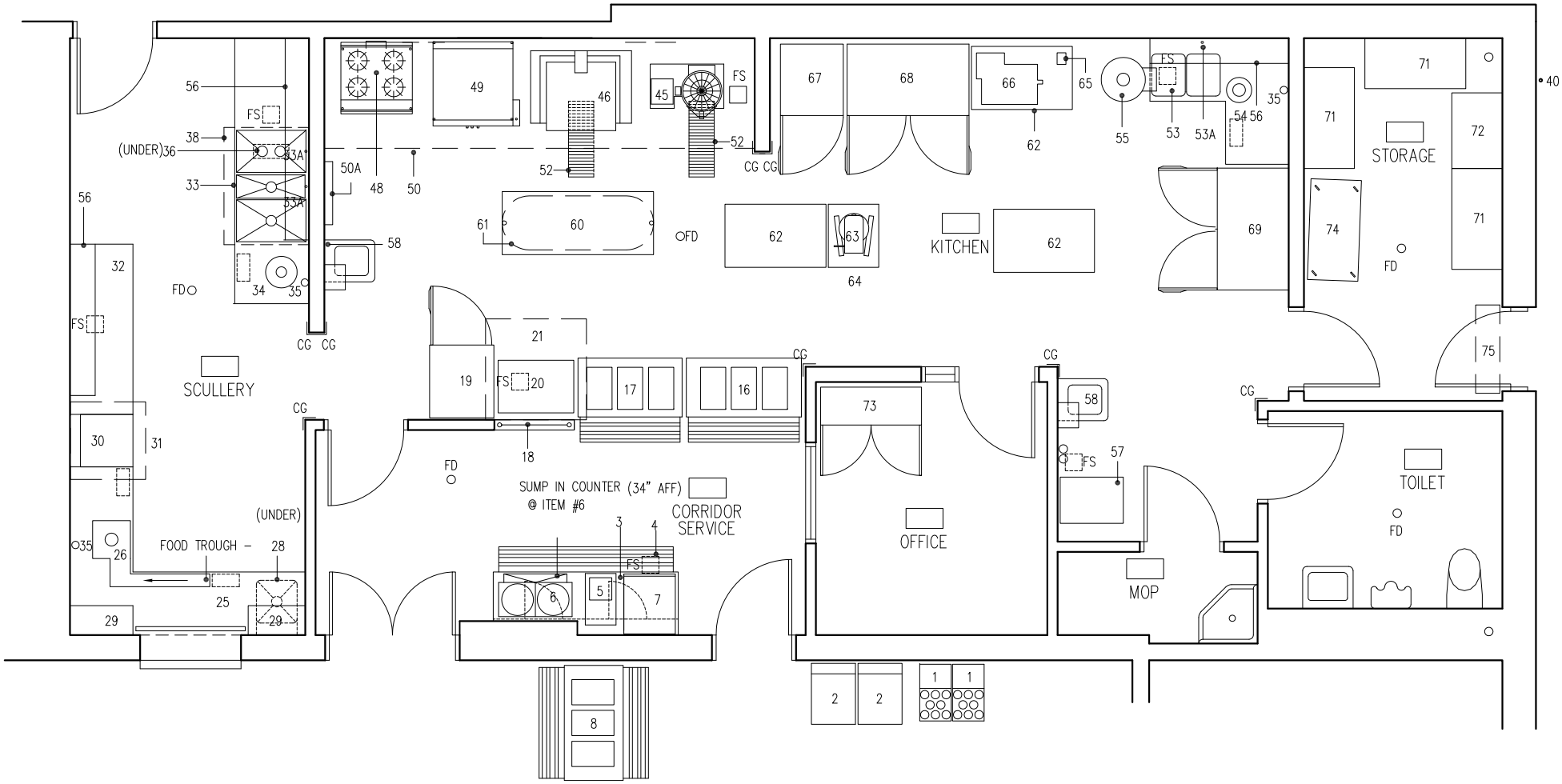

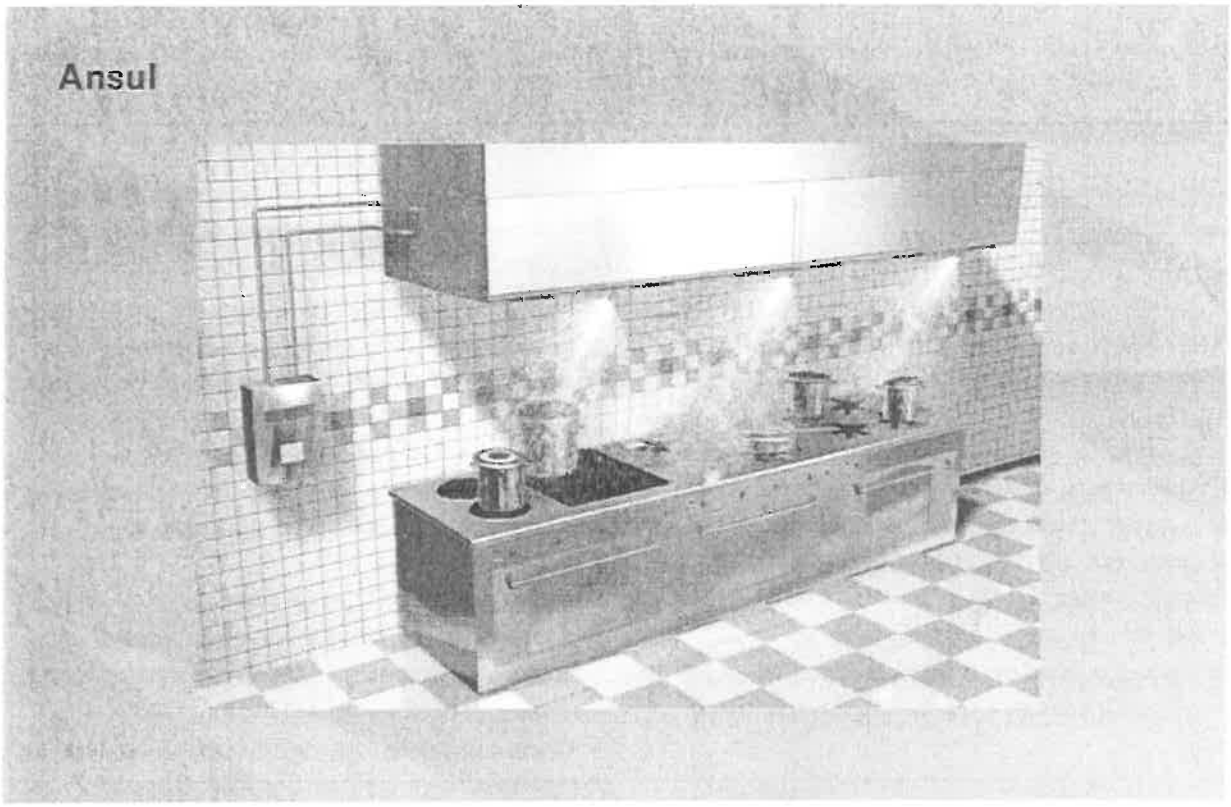

60/ANSUL/250/010GEN

Equipment supplied

The restaurant fire suppression system is a pre-engineered; wet chemical, cartridge-operated, regulated pressure type with a fixed nozzle agent distribution network. It is listed with Underwriters Laboratories, Inc. (UL).

Operation instructions

The system provides automatic actuation; or it can be actuated manually through a remote pull station. The gas or electrical supply to all protected appliances will be immediately shut off upon actuation of the system, using appropriate gas shut-off or electrical shutdown devices (if fitted, by others).
The R-102 system suppresses fire by spraying the plenum area; the filters, cooking surfaces, and the exhaust duct system with a predetermined flow rate of ANSULEX Low pH Liquid Fire Suppressant. When the liquid agent is discharged onto a cooking appliance fire, it cools the grease surface, and reacts with the hot grease (saponification) forming a layer of soap-like foam on the surface of the fat. This layer acts as insulation between the hot grease and the atmosphere, thus helping to prevent the escape of combustive vapours.

Exhaust fans in the ventilating systems should be left on. The forced draft of these fans assists the movement of the liquid agent through the ventilation system, thus aiding in the fire suppression process. These fans also provide a cooling effect in the plenum and duct after the fire suppression system has been discharged.
It is also recommended that make-up or supply-air fans be shut down upon system actuation. Shutdown of fuel and power to all appliances located under protected ventilating equipment is required upon system actuation (if fitted, by others).
For continued fire protection, the R-102 fire suppression system must be re-charged by an authorized Ansul distributor immediately after a system discharge.

Maintenance instructions

Never use corrosive cleaning solutions on the fusible link or cables.
Check to make certain there is no corrosion to any of the detection system components. Certain high alkaline cleaners could cause corrosion.
Ensure that metal fusible links are replaced at least annually.
Deterioration of these links could cause the system to be actuated or to malfunction in case of a fire.
Make certain the releasing unit has not been tampered with, and that visual inspection seals are not broken or missing.
At daily intervals check your system for loose pipes and missing or grease covered nozzle caps. Make certain nozzle caps are in place over the ends of each nozzle.
Temporarily remove cap, check to make certain it is not brittle, and snap back on nozzle.
Check each metal blow-off cap and make certain the cap can be turned freely on the nozzle.
Periodically check your visual indicator on the releasing unit to make certain the system is cocked.
Have your system inspected by Halton Vent Master at a maximum of 6-month intervals and immediately after major hood and duct cleaning. Often fusible links are wired shut during the cleaning process to prevent accidental activation. This will prevent the system from operating automatically. It's also possible that your system might have been disconnected, damaged, or has accumulated excessive deposits of grease causing your system to become inoperative.
Check that the manual pull station is not obstructed, has not been tampered with, and is ready for operation.
Make certain that each tank and releasing unit is mounted in an area with a temperature range of 32°.
Under certain circumstances hood and duct cleaning operations may render the fire suppression system ineffective due to a coating of cleaning chemical left on the detection equipment or mishandling of the system by cleaning service personnel.

Therefore, it is strongly recommended that the R-102 system be completely inspected and serviced by an authorized Ansul distributor immediately following any such cleaning operations.

Technical Performance data and cash sheets: R-102™ Restaurant Fire Suppression Systems

UC/ANSUL/250/010C/EN

Features

- Low pH Agent
- Proven Design
- Reliable Cartridge Operated
- Aesthetically Appealing
  UL Listed – Meets Requirements of UL 300

Application

The Ansul R-102 Restaurant Fire Suppression System is an automatic, pre-engineered, fire suppression system designed to protect the following areas associated with cooking equipment; ventilating equipment including hoods, ducts, plenums, and filters; fryers; griddles and range tops; upright, natural charcoal, or chain-type broilers; electric, lava rock, mesquite or gas-radiant charbroilers and woks.
The system is ideally suitable for use in restaurants, hospitals, nursing homes, hotels, schools, airports, and other similar facilities.
Use of the R-102 system is limited to interior applications only. The regulated release and tank assemblies must be mounted in an area where the air temperature will not fall below 32 °F (0 °C) or exceed 130 °F (54 °C). The system must be designed and installed within the guidelines of the UL Listed Design, Installation, Recharge, and Maintenance Manual.

System description

The restaurant fire suppression system is a pre-engineered, wet chemical, cartridge-operated, regulated pressure type with a fixed nozzle agent distribution network. It is listed with Underwriters Laboratories, Inc. (UL).

A system owner's guide is available containing basic information pertaining to system operation and maintenance. A detailed technical manual is also available including system description, design, installation, recharge, and maintenance procedures, plus additional equipment installation and resetting instructions.
The system is installed and serviced by authorized distributors that are trained by the manufacturer.
The basic system consists of an ANSUL AUTOMAN regulated release assembly which includes a regulated release mechanism and a wet chemical storage tank housed within a single enclosure. Nozzle blow-off caps, detectors, cartridges, agent, fusible links, and pulley elbows are supplied in separate packages in the quantities needed for fire suppression system arrangements.
Additional equipment includes remote manual pull station, mechanical and electrical gas valves, pressure switches, and electrical switches for automatic equipment and gas line shut-off. Accessories can be added such as alarms, warning lights, etc., to installations where required.
Tanks can be used in multiple arrangements to allow for larger hazard coverage. Each tank is limited to a listed maximum amount of flow numbers.
The system is capable of automatic detection and actuation and/or remote manual actuation. Additional equipment is available for mechanical or electrical as line shut-off applications.
The detection portion of the fire suppression system allows for automatic detection by means of specific alloy rated fusible links, which, when the temperature exceeds the rating of the link, the link separates, allowing the regulated release to actuate.

Component description

Wet Chemical Agent — The extinguishing agent is a mixture of organic salts designed for rapid flame knockdown and foam securement of grease related fires. It is available in plastic containers with instructions for wet chemical handling and usage.
Agent Tank — The agent tank is installed in a stainless steel enclosure or wall bracket. The tank is constructed of stainless steel.
Tanks are available in two sizes: 1.5 gallon (5.7 L) and 3.0 gallon (11.4 L). The tanks have a working pressure of 100 psi (6.9 bar), a test pressure of 300 psi (20.7 bar), and a minimum burst pressure of 600 psi (41.4 bar).
The tank includes an adaptor/tube assembly. The adaptor is chrome-plated steel with a 1/4 in. NPT female gas inlet and a 3/8 in. NPT female agent outlet. The adaptor also contains a bursting disc seal which prevents the siphoning of agent up the pipe during extreme temperature variations.
Regulated Release Mechanism — The regulated release mechanism is a spring-loaded, mechanical/pneumatic type capable of providing the expellant gas supply to one or two agent tanks, depending on the capacity of the gas cartridge used. It contains a factory installed regulator deadset at 100 psi (6.9 bar) with an internal relief of approximately 145 psi (10.0 bar). It has automatic actuation capabilities by a fusible link detection system and remote manual actuation by a mechanical pull station.
The regulated release mechanism contains a release assembly, regulator, expellant gas hose, and agent storage tank housed in a stainless steel enclosure with cover. The enclosure contains knockouts for 1/2 in. conduit. The cover contains an opening for a visual status indicator.
It is compatible with mechanical gas shut-off devices; or, when equipped with a field or factory-installed switch, it is compatible with electric gas line or appliance shut-off devices.
Regulated Actuator Assembly — When more than two agent tanks are required, the regulated actuator is available to provide expellant gas for additional tanks. It is connected to the cartridge receiver outlet of the regulated release mechanism providing simultaneous agent discharge. It contains a regulated actuator deadset at 100 psi (6.9 bar) with an internal relief of approximately 145 psi (10.0 bar). It has automatic actuation capabilities by a fusible link detection system and remote manual actuation by a mechanical pull station.
The regulated actuator assembly contains a regulated actuator, regulator, expellant gas hose, and agent tank housed in a stainless steel enclosure with cover. The enclosure contains knockouts to permit installation of the expellant gas line.
Discharge Nozzles — Each discharge nozzle is tested and listed with the R-102 system for a specific application. Nozzle tips are stamped with the flow number designation (1/2, 1, 2, and 3). Each nozzle must have a metal or rubber blow-off cap to keep the nozzle tip orifice free of cooking grease build-up.

Approvals

Applicable Standards: ULI listed under EX-3470; ULC listed under CEX-747; meets requirements of NFPA 96 (Standard for the Installation of Equipment for the Removal of Smoke and Grease-Laden Vapours from Commercial Cooking Equipment); NFPA 17A (Standard on Wet Chemical Extinguishing Systems).

Ordering information

Order all system components through your local authorized Ansul Distributor.

Specifications

An Ansul R-102 Fire Suppression System shall be furnished. The system shall be capable of protecting all hazard areas associated with cooking equipment.

1.0 General

1.1 References

1.1.1 Underwriters Laboratories, Inc. (UL)
1.1.1.1 UL Standard 1254 1.1.1.2 UL Standard 300
1.1.2 National Fire Protection Association (NFPA)
1.1.2.1 NFPA 96 1.1.2.2 NFPA 17A

1.2 Submittals

1.2.1 Submit two sets of manufacturer's data sheets
1.2.2 Submit
two sets of piping design drawings

1.3 System Description

1.3.1 The system shall be an automatic fire suppression system using a wet chemical agent for grease related fires.
1.3.2 The system shall be capable of suppressing fires in the following areas associated with cooking equipment: ventilating equipment including hoods, ducts, plenums, and filters; fryers; griddles and range tops; upright, natural charcoal, or chain-type broilers; electric, lava rock, mesquite or gas-radiant char-broilers.
1.3.3 The system shall be the pre-engineered type having minimum and maximum guidelines established by the manufacturer and listed by Underwriters Laboratories, Inc. (UL).
1.3.4 The system shall be installed and serviced by personnel trained by the manufacturer.
1.3.5 The system shall be capable of protecting cooking appliances by utilizing either dedicated appliance protection and/or overlapping appliance protection.

1.4 Quality Control

1.4.1 Manufacturer: The R-102 Restaurant Fire Suppression System shall be manufactured by a company with at least thirty years experience in the design and manufacture of preengineered fire suppression systems. The manufacturer shall be ISO 9001 registered.
1.4.2 Certificates: The wet agent shall be a specially formulated, aqueous solution of organic salts with a pH range between 7.8 - 8.2, designed for flame knockdown and foam securement of grease- related fires.

1.5 Warranty, Disclaimer, and Limitations

1.5.1 The pre-engineered restaurant fire suppression system components shall be warranted for five years from date of delivery against defects in workmanship and mate.

1.6 Delivery

1.6.1 Packaging: All system components shall be securely packaged to provide protection during shipment.

1.7 Environmental Conditions

1.7.1 The R-102 system shall be capable of operating in a temperature range of 32 °F to 130 °F (0 °C to 54 °C).

2.0 product

2.1 Manufacturer

2.1.1 Ansul Fire Protection, One Stanton Street, Marinette, Wisconsin 54143-2542, Telephone (715) 735-7411.

2.2 Components

2.2.1 The basic system shall consist of an ANSUL AUTOMAN regulated release assembly which includes a regulated release mechanism and a wet chemical storage tank housed within a single enclosure. Nozzles, blow-off caps, detectors, cartridges, agent, fusible links, and pulley elbows shall be supplied in separate packages in the quantities needed for fire suppression system arrangements. Additional equipment shall include remote manual pull station, mechanical and electrical gas valves, pressure switches, and electrical switches for automatic equipment and gas line shut-off.
2.2.2 Wet Chemical Agent: The extinguishing agent shall be a specially formulated, aqueous solution of organic salts with a pH range between 7.8 – 8.2, designed for flame knockdown and foam securement of grease related fires.
2.2.3 Agent Tank: The agent tank shall be installed in a

stainless steel enclosure or wall bracket. The tank shall be constructed of stainless steel. Tanks shall be available in two sizes; 1.5 gallon (5.7 L) and 3.0 gallon (11.4 L).The tanks shall have a working pressure of 100 psi (6.9 bar), a test pressure of 300 psi (20.7 bar), and a minimum burst pressure of 600 psi (41.4 bar). The tank shall include an adaptor/tube assembly containing a burst disc union.

2.2.4 Regulated Release Mechanism: The regulated release mechanism shall be a spring-loaded, mechanical/pneumatic type capable of providing the expellant gas supply to one or two agent tanks depending on the capacity of the gas cartridge used. It shall contain a factory installed regulator deadset at 100 psi (6.9 bar) with an internal relief of approximately 145 psi (10.0 bar).

It shall have the following actuation capabilities: automatic actuation by a fusible link detection system and remote manual actuation by a mechanical pull station.

The regulated release mechanism shall contain a release assembly, regulator, expellant gas hose, and agent storage tank housed in a stainless steel enclosure with cover. The enclosure shall contain knock-outs for 1/2 in. conduit. The cover shall contain an opening for a visual status indicator.

It shall be compatible with mechanical gas shut-off devices; or, when equipped with a field or factory-installed switch, it shall be compatible with electric gas line or appliance shut-off devices.

2.2.5 Regulated Actuator Assembly: When more than two agent tanks are required, the regulated actuator shall be available to provide expellant gas for additional tanks. It shall be connected to the cartridge receiver outlet of the regulated release mechanism providing simultaneous agent discharge.

The regulator shall be deadset at 100 psi (6.9 bar) with an internal relief of approximately 145 psi (10.0 bar).The regulated actuator assembly shall contain a regulated actuator, regulator, expellant gas hose, and agent tank housed in a stainless steel enclosure with cover. The enclosure shall contain knockouts to permit installation of the expellant gas line.

2.2.6 Discharge Nozzles: Each discharge nozzle shall be tested and listed with the R-102 system for a specific application. Nozzles tips shall be stamped with the flow number designation (1/2, 1, 2, and 3). Each nozzle shall have a metal or rubber blow-off cap to keep the nozzle tip orifice free of cooking grease build-up.

2.2.7. Distribution Piping: Distribution piping shall be Schedule 40 black iron, chrome-plated, or stainless steel pipe
conforming to ASTM A120, A53, or A106.

2.2.8. Detectors: The detectors shall be the fusible link style designed to separate at a specific temperature.

2.2.9. Cartridges: The cartridge shall be a sealed steel pressure vessel containing either carbon dioxide or nitrogen gas. The cartridge seal shall be designed to be punctured by the releasing device supplying the required pressure to expel wet chemical agent from the storage tank.

3.0 implementation

3.1 Installation

3.1.1 The R-102 fire suppression system shall be designed, installed, inspected, maintained, and recharged in accordance with the manufacturer's listed instruction manual.

3.2 Training

3.2.1 Training shall be conducted by representatives of the manufacturer.

R-102 FLUSHING CONCENTRATE MATERIAL SAFETY DATA SHEET ACCORDING TO 91/155/EEC

ANSUL INCORPORATED MARINETTE, WI 54143-2542

30/ANSUL/250/0100/EN

I.	**Identification of the Substance / Preparation and of the Company**	
I.1	Trade Name:	R-102 Flushing Concentrate
I.2	Manufacturer/ Supplier:	ANSUL INCORPORATED
	Address:	One Stanton Street, Marinette, WI 54143-2542
	Prepared by:	Health and Safety Department
	Internet /Home Page Address:	http://www.ansul.com
I.3	Emergency Phone Number:	CHEMTREC 800-424-9300 or (703) 527-3887
II.	**Composition / Information on Ingredients**	
II.1	Chemical Formula:	N/A — CAS No.: N/A
	Chemical Name:	N/A This is a mixture — Chemical Family: Mixture
II.2	Substances with Exposure Limits:	

Component(s) (chemical and common name(s))	Wt.%	CAS No.	Acute Toxicity Data
Potassium Carbonate	30-35	584-08-7	Oral LD50(rat)1870 mg/kg
Potassium Acetate	18	127-08-2	Oral LD2(rat)3250 mg/kg
Yellow Food Colour	344 ppm	N/E	NDA
Water	Approx 50	7732-18-5	NDA

III.	**Hazards Identification**	
III.1	For Humans:	
	Threshold Limit Value:	None Established
	Routes of Entry:	
	Eye Contact:	Irritant. Prolonged contact can cause chemical burns
	Skin Contact:	Irritant. Prolonged contact can cause chemical burns
	Inhalation:	Not an expected route
	Ingestion:	Irritating to mucous membrane of entry.
	Signs and Symptoms:	Acute Overexposure; Due to alkaline nature, Material irritates skin, eyes and mucous membrane. Prolonged contact may cause skin burns.
	Chronic Exposure:	None Known
	Medical Conditions Generally:	None Known
	Chemical Listed as:	National Toxicology Program: I.A.R.C. Monographs:
	OSHA:	
	Carcinogen or Potential:	[ ] Yes [x] No [ ] Yes [x] No [ ] Yes [x] No
IV	**First Aid Measures**	
IV.1	Inhalation:	Fresh air if symptoms occur. Seek Medical attention if irritation persists
IV.2	Eye Contact:	Flush and irrigate with water for 15 minutes while holding eyelids open. If irritation persists, seek Medical attention
IV.3	Skin Contact:	Wash thoroughly with soap and water. If irritation persists, seek medical attention
IV.4	Ingestion:	Dilute by drinking large quantities of water
V.	**Fire-Fighting Measures**	
	Special Fire Fighting Procedures:	None
	Unusual Fire and Explosion Hazards:	None
VI.	**Accidental Release Measures**	
VI.1	Personal Precautions:	
	Protective Gloves:	Rubber gloves for spill/leak
	Eye Protection:	Chemical goggles recommended during flushing procedures
VI.2	Environmental Precautions:	
	Steps to be taken in Case: Material is released or spilled:	Stop leaks. Contain Spill. Remove as much as possible. Place in closed container for proper disposal. Wash spill area with large amounts of water to remove traces and neutralize.
VI.3	Clean-Up Methods:	Dispose of in compliance with local, state and federal regulations

o:/-NSUL/260/0106/EN

VII Storage and Handling

VII.1	Precautions to be taken In Handling and Storage:	Store in original container. Keep tightly closed. Keep separate from acid.

VIII Exposure Controls / Personal Protection

VIII.1	Breath Protection:	N/A
VIII.2	Hand Protection:	
	Protective Gloves:	Rubber gloves for spill/leak
VIII.3	Eye Protection:	Chemical goggles recommended during flushing procedures
VIII.4	Body Protection:	

Other Protected Clothing or Equipment: Eye wash and safety showers are good safe practices

IX Physical and Chemical Properties

IX.1	Appearance and Odour:	Yellow coloured liquid, mild odour	
IX.2	Boiling Point:	113° C	Specific Gravity (H^2O)=1): 1..53
IX.3	Vapour Pressure (mm Hg):	Not Determined	Percent Volatile by Volume(%): 50
IX.4	Vapour Density (Air =1):	1.03	Evaporation Rate (Butyl Acetate = 1): Approx 0.005
IX.5	Solubility in Water:	100%	Reactivity in Water: Mild exothermic
IX.6	Flash point:	None to boiling	Flammable Limits in Air % by Vol: N/A

X Stability and Reactivity

X.1	Conditions to Avoid:	Stability:	Unstable [ ] Conditions to Avoid: N/A Stable [x]
X.2	Hazardous Polymerisation		May Occur [ ] Will Not Occur [x]

X.3 Materials to Avoid:

Incompatibility (Materials to Avoid): Reactive metals, ClF3, electrically energized equipment, Any material reactive with water

Hazardous Decomposition Products: Not established, acrid fumes

XI Ecological Information

XI.1	Degradability:	Not Determined, materials not considered to be aquatic pollutant
XI.2	Environmental Impact Rating:	Not Determined, materials not considered to be aquatic pollutant
XI.3	Acute Aquatic Toxicity:	Not Determined, materials not considered to be aquatic pollutant
XI.4	Other Indications:	Not Determined, materials not considered to be aquatic pollutant

XII Other Information

XII.1	Further Information:	Contact Ansul Incorporated

ANSULEX LOW Ph MATERIAL SAFETY DATA SHEET ACCORDING TO 91/155/EEC

ANSUL INCORPORATEDMARINETTE, WI 54143-2542

6C/ANSU/250/010C/EN

I.	**Identification of the Substance / Preparation and of the Company**			
I.1	Trade Name:	ANSULEX Low pH Liquid Fire Suppressant		
I.2	Manufacturer/ Supplier:	ANSUL INCORPORATED		
	Address:	One Stanton Street, Marinette, WI 54143-2542		
	Prepared by:	Health and Safety Department		
	Internet /Home Page Address:	http://www.ansul.com		
I.3	Emergency Phone Number:	CHEMTREC 800-424-9300 or (703) 527-3887		
II.	**Composition / Information on Ingredients**			
II.1	Chemical Formula:	N/A	CAS No.:	N/A
	Chemical Name:	N/A	This is a mixture	Chemical Family: Mixture
II.2	Substances with Exposure Limits:			

Component(s) (chemical and common name(s))	Wt.%	CAS No.	Acute Toxicity Data
Proprietary mixture of organic and inorganic salts and water			NDA
Phosphoric Acid	0.2	7664-38-2	
EDTA	0.65	64-02-8	
Yellow – Green Fluorescent Dye	0.011	518-47-3	Oral LD50 (rat)6800 mg/kg

III.	**Hazards Identification**			
III.1	For Humans:			
	Threshold Limit Value	None Established		
	Routes of Entry:			
	Eye Contact:	Irritant		
	Skin Contact:	Irritant		
	Inhalation:	Not an expected route		
	Ingestion:	Irritating to mucous membrane of entry.		
	Signs and Symptoms:	Acute Overexposure; Material irritates skin, eyes and mucous membrane		
	Chronic Exposure:	None Known		
	Medical Conditions Generally:	None Known		
	Chemical Listed as:	National Toxicology Program:	I.A.R.C. Monographs:	OSHA:
	Carcinogen or Potential:	[ ] Yes [x] No [ ]	Yes [x] No [ ]	Yes [x] No
IV	**First Aid Measures**			
IV.1	Inhalation:	Fresh air if symptoms occur. Seek Medical attention if irritation persists		
IV.2	Eye Contact:	Flush and irrigate with water for 15 minutes while holding eyelids open. If irritation persists, seek Medical attention		
IV.3	Skin Contact:	Wash thoroughly with soap and water. If irritation persists, seek medical attention		
IV.4	Ingestion:	Dilute by drinking large quantities of water		
V.	**Fire-Fighting Measures**			
	Special Fire Fighting Procedures:	NONE-THIS IS AN EXTINGUISHING AGENT		
	Unusual Fire and Explosion Hazards:	None		
VI.	**Accidental Release Measures**			
VI.1	Personal Precautions:			
	Protective Gloves:	Rubber gloves for spill/leak		
	Eye Protection:	Chemical goggles recommended during spill/leak procedures		
VI.2	Environmental Precautions:			
	Steps to be taken in Case Material is released or spilled:	Stop leaks. Contain Spill. Remove as much as possible. Place in closed container for proper disposal. Wash spill area with large amounts of water to remove traces and neutralize.		
VI.3	Clean-Up Methods:	Dispose of in compliance with local, state and federal regulations		

VII	**Storage and Handling**			
VII.1	Precautions to be taken In Handling and Storage:	Store in original container. Keep tightly closed. Keep separate from acid.		
VIII	Exposure Controls / Personal Protection			
VIII.1	Breath Protection:	N/A		
VIII.2	Hand Protection:			
	Protective Gloves:	Rubber gloves for spill/leak		
VIII.3	Eye Protection:	Chemical goggles recommended during spill/leak procedures		
VIII.4	Body Protection:	Other Protected Clothing or Equipment: Eye wash and safety showers are good safe practices		
IX	**Physical and Chemical Properties**			
IX.1	Appearance and Odour:	Fluorescent Yellow coloured liquid, mild odour		
IX.2	Boiling Point:	113° C	Specific Gravity (H2O)=1):	1.33
IX.3	Vapour Pressure (mm Hg):	Not Determined	Percent Volatile by Volume(%):	50
IX.4	Vapour Density (Air =1):	1.03	Evaporation Rate (=1):	0.13
IX.5	Solubility in Water:	100%	Reactivity in Water:	Mild exothermic
IX.6	Flash point:	None to boiling	Flammable Limits in Air % by Vol:	N/A
X	**Stability and Reactivity**			
X.1	Conditions to Avoid:	Stability:	Unstable [ ] Stable [x]	Conditions to Avoid: N/A
X.2	Hazardous Polymerisation		May Occur [ ] Will Not Occur [x]	
X.3	Materials to Avoid: Incompatibility (Materials to Avoid): Reactive metals, ClF3, electrically energized equipment, Any material reactive with water Hazardous Decomposition Products: Not established, acrid fumes			
XI	**Toxicology Information**			
XI.1	Toxicology Information:	LC50> 5000 mg/kg oral rat.		
XII	**Ecological Information**			
XII.1	Degradability:	Not Determined, materials not considered to be aquatic pollutant		
XII.2	Environmental Impact Rating:	Not Determined, materials not considered to be aquatic pollutant		
XII.3	Acute Aquatic Toxicity:	Not Determined, materials not considered to be aquatic pollutant		
XII.4	Other Indications:	Not Determined, materials not considered to be aquatic pollutant		
XIII	**Other Information**			
XIII.1	Further Information:	Contact Ansul Incorporated		

NITROGEN MATERIAL SAFETY DATA SHEET ACCORDING TO 91/155/EEC

ANSUL INCORPORATED MARINETTE, WI 54143-2542

80/ANSUL/250/0106/EN

I.	**Identification of the Substance / Preparation and of the Company**				
I.1	Trade Name:	NITROGEN			
I.2	Manufacturer/ Supplier:	ANSUL INCORPORATED			
	Address:	One Stanton Street, Marinette, WI 54143-2542			
	Prepared by:	Health and Safety Department			
	Internet /Home Page Address:	http://www.ansul.com			
I.3	Emergency Phone Number:	CHEMTREC 800-424-9300 or (703) 527-3887			
II.	**Composition / Information on Ingredients**				
II.1	Chemical Formula:	N2	CAS No.:	7727-37-9	
	Chemical Name:	Nitrogen	Chemical Family:	Gas	
II.2	Substances with Exposure Limits:				
	Component(s) (chemical and common name(s))	Wt.%	CAS No.	Acute Toxicity Data	
	Nitrogen	100	7727-37-9	NDA	
III.	**Hazards Identification**				
III.1	For Humans:				
	Threshold Limit Value	None Listed			
	Routes of Entry:				
	Eye Contact:	Avoid contact with liquefied form of N^2. Can produce chilling sensation and discomfort, also frostbite.			
	Skin Contact:	Evaporation of liquid from the skin can cause a chilling sensation. Frostbite can occur. Avoid N^2 liquid.			
	Inhalation:	In high concentrations, it is a simple asphyxiant – dizziness, shortness of breath, unconsciousness, or suffocation may occur			
	Ingestion:	Ingestion is not likely to occur since this material is gas at room temperature			
	Signs and Symptoms:	Acute Overexposure; Dizziness, headaches, tinnitus, difficulty breathing Drowsiness, depending on length of exposure and concentrations Chronic Exposure; Compressed air illness			
	Medical Conditions Generally:	None Known			
	Chemical Listed as:	National Toxicology Program:	I.A.R.C. Monographs:	OSHA:	
	Carcinogen or Potential:	[ ] Yes [x] No [ ]	Yes [x] No [ ]	Yes [x] No	
IV	**First Aid Measures**				
IV.1	Inhalation:	Fresh air if symptoms occur. If cough or other respiratory symptoms occur, consult medical personnel. If not breathing, give artificial respiration, preferably mouth-to-mouth. If breathing is difficult, give oxygen. Consult medical personnel			
IV.2	Eye Contact:	Flush and irrigate with water for 15 minutes while holding eyelids open. If redness, itching or burning sensation develops, get Medial attention. Treat for frostbite if necessary			
IV.3	Skin Contact:	Wash the material off the skin with copious amounts of soap and water for at least 15 minutes. If redness, itching or burning sensation develops get Medical attention. Treat for frostbite if necessary			
IV.4	Ingestion:	Ingestion is not likely to occur as material is gas at room temperature			
V.	**Fire-Fighting Measures**				
	Special Fire Fighting Procedures:	Though gas cylinders are equipped with pressure and and temperature relief devices, they should be removed from high temperatures or fire to avoid risk of rupture			
	Unusual Fire and Explosion Hazards:	None			

VI.	**Accidental Release Measures**	
VI.1	Personal Precautions:	
	Protective Gloves:	Protective gloves for contact with liquid
	Eye Protection:	Chemical goggles recommended when handling liquid. Full face shield if splashing is possible
VI.2	Steps to be taken in Case Material is released or spilled:	Ventilate to outside
VI.3	Waste Disposal Method:	Dispose of in compliance with local, state and federal regulations
VII	**Storage and Handling**	
VII.1	Precautions to be taken In Handling and Storage:	Store containers in a clean, dry well-ventilated area, away from heat above 125°F. Store as a compressed gas in DOT approved vessels. If cylinder is not attached to a system, it must be safely capped to protect against violent vessel movement or force of escaping gas if valve is actuated or seal is accidentally puncture
VIII	**Exposure Controls / Personal Protection**	
VIII.1	Breath Protection:	N/A
VIII.2	Hand Protection:	
	Protective Gloves:	Rubber gloves for contact with liquid
VIII.3	Eye Protection:	Chemical goggles recommended during handling. Full face shield if splashing is possible
VIII.4	Body Protection:	
	Other Protected Clothing or Equipment:	Protective clothing for contact with liquid
IX	**Physical and Chemical Properties**	
IX.1	Appearance and Odour:	Colourless gas with no odour
IX.2	Boiling Point:	-195.8° C — Specific Gravity (H^2O)=1):N/A
IX.3	Vapour Pressure (mm Hg):	Not Determined — Percent Volatile by Volume(%): 100
IX.4	Vapour Density (Air =1):	0.98 — Evaporation Rate (=1): N/A
IX.5	Solubility in Water:	Slight — Reactivity in Water: Slight-forms N^2CO^3
IX.6	Flash point:	None — Flammable Limits in Air % by Vol: N/A
X	**Stability and Reactivity**	
X.1	Conditions to Avoid:	Stability: Unstable [ ] Stable [x] — Conditions to Avoid: N/A
X.2	Hazardous Polymerisation	May Occur [ ] Will Not Occur [x]
X.3	Materials to Avoid:	
	Incompatibility (Materials to Avoid):	Can react violently with Li, Nd, Ti under proper conditions Hazardous Decomposition Products: None
XI	**Toxicology Information**	
XI.1	Toxicology Information:	LC50> 5000 mg/kg oral rat.
XII	**Ecological Information**	
XII.1	Degradability:	Not Determined, materials not considered to be aquatic pollutant
XII.2	Environmental Impact Rating:	Not Determined, materials not considered to be aquatic pollutant
XII.3	Acute Aquatic Toxicity:	Not Determined, materials not considered to be aquatic pollutant
XII.4	Other Indications:	Not Determined, materials not considered to be aquatic pollutant
XIII	**Other Information**	
XIII.1	Further Information:	Contact Ansul Incorporated

Halton Vent Master
Halton Vent Master Ltd, 11 Laker Road, Airport Industrial Estate, Rochester, Kent ME1 3QX U.K.
Tel. +44 (0) 1634 666 111, Fax +44 (0) 1634 666 333

TRUE FOOD SERVICE EQUIPMENT, INC.
2001 East Terra Lane • O'Fallon, Missouri 63366
(636)240-2400 • Fax (636)272-2408 • (800)325-6152 • Intl Fax# (001)636-272-7546
Parts Dept. (800)424-TRUE • Parts Dept. Fax# (636)272-9471 • www.truemfg.com

Project Name: _____
Location: _____
Item #: _____ *Qty:* _____
Model #: _____

AIA #
SIS #

Model:
GDM-19T

Glass Door Merchandiser:
Swing Door Refrigerator

GDM-19T

- The world's #1 manufacturer of glass door merchandisers.
- Oversized, factory balanced, refrigeration system holds 33°F to 38°F (.5°C to 3.3°C).
- Exterior - non-peel or chip white laminated vinyl; durable and permanent.
- Interior - attractive, NSF approved, white aluminum interior liner with stainless steel floor.
- Self closing door. Positive seal, torsion type closure system.
- "Low-E", double pane thermal insulated glass door assembly with extruded aluminum frame. The latest in energy efficient technology.
- Patented integrated door light (IDL) system for brighter, shadow free illumination.
- Entire cabinet structure is foamed-in-place using Ecomate. A high density, polyurethane insulation that has zero ozone depletion potential (ODP) and zero global warming potential (GWP).

Bottom mounted units feature

- "No stoop" lower shelf to maximize product visibility.
- Storage on top of cabinet.
- Easily accessible condenser coil for cleaning.

Scan code for video

ROUGH-IN DATA

Specifications subject to change without notice.
Chart dimensions rounded up to the nearest ⅛" (millimeters rounded up to next whole number).

Model	Doors	Shelves	Cabinet Dimensions (inches) (mm) L	D†	H	HP	Voltage	Amps	NEMA Config.	Cord Length (total ft.) (total m)	Crated Weight (lbs.) (kg)
GDM-19T	1	4	27	24⅞	78⅝	⅓	115/60/1	8.1	5-15P	9	275
			686	632	1998	⅓	230-240/50/1	2.8	▲	2.74	125

▲Plug type varies by country.

MADE IN U.S.A. SINCE 1935 · 5 YEAR COMPRESSOR WARRANTY USA · c UL us · NSF · CE

3/13 Printed in U.S.A.

APPROVALS:

AVAILABLE AT:

Model:
GDM-19T

Glass Door Merchandiser:
Swing Door Refrigerator

STANDARD FEATURES

DESIGN
- True's commitment to using the highest quality materials and oversized refrigeration systems provides the user with colder product temperatures, and lower utility costs in an attractive merchandiser that brilliantly displays packaged food and beverages.

REFRIGERATION SYSTEM
- Factory engineered, self-contained, capillary tube system using environmentally friendly (CFC free) 134A refrigerant.
- Extra large evaporator coil balanced with higher horsepower compressor and large condenser; maintains cabinet temperatures of 33°F to 38°F (.5°C to 3.3°C).
- Sealed, cast iron, self-lubricating evaporator fan motor(s) and larger fan blades give True merchandisers a more efficient low velocity, high volume airflow design. This unique design ensures faster temperature pull down of warm product, colder holding temperatures and faster recovery in high use situations.
- Bottom mounted condensing unit positioned for easy maintenance. "No stoop" lower shelf maximizes visibility by raising merchandised product to higher level.

CABINET CONSTRUCTION
- Exterior - non-peel or chip white laminated vinyl; durable and permanent.
- Interior - attractive, NSF approved, white aluminum liner with stainless steel floor.
- Insulation - entire cabinet structure is foamed-in-place using Ecomate. A high density, polyurethane insulation that has zero ozone depletion potential (ODP) and zero global warming potential (GWP).
- Welded, heavy duty steel frame rail, black powder coated for corrosion protection.
- Frame rail fitted with leg levelers.
- Illuminated exterior sign panel. Variety of sign options available.

DOOR
- "Low-E", double pane thermal insulated glass door assembly with extruded aluminum frame. The latest in energy efficient technology.
- Door fitted with 12" (305 mm) long integrated handle.
- Self closing door. Positive seal, torsion type closure system.
- Magnetic door gasket of one piece construction, removable without tools for ease of cleaning.

SHELVING
- Four (4) adjustable, heavy duty PVC coated wire shelves 22 9/16"L x 18 1/4"D (574 mm x 464 mm). Four (4) chrome plated shelf clips included per shelf.
- Shelf support pilasters made of same material as cabinet interior; shelves are adjustable on ½" (13 mm) increments.

LIGHTING
- Safety shielded fluorescent interior lighting. Door(s) utilize(s) full-length, patented, integrated doors light (IDL) system.
- Cabinet lighting utilizes electronic ballast and T-8 bulbs for brighter illumination, longer bulb life and increased energy efficiency.

MODEL FEATURES
- Evaporator is epoxy coated to eliminate the potential of corrosion.
- See our website www.truemfg.com for latest color and sign offerings.
- Convenient clean-out drain built in cabinet floor.
- Listed under NSF-7 for the storage and/or display of packaged or bottled product.

ELECTRICAL
- Unit completely pre-wired at factory and ready for final connection to a 115/60/1 phase, 15 amp dedicated outlet. Cord and plug set included.

115/60/1
NEMA-5-15R

OPTIONAL FEATURES/ACCESSORIES
Upcharge and lead times may apply.
- ❑ 230 - 240V / 50 Hz.
- ❑ Black exterior.
- ❑ Stainless steel exterior.
- ❑ Black aluminum interior liner with black shelving.
- ❑ Stainless steel interior liner.
- ❑ 6" (153 mm) standard legs.
- ❑ 6" (153 mm) seismic/flanged legs.
- ❑ 2½" (64 mm) diameter castors.
- ❑ 4" (102 mm) diameter castors.
- ❑ LED Lighting.
- ❑ Red wine thermostat.
- ❑ White wine thermostat.
- ❑ Chocolate thermostat.
- ❑ Barrel lock (factory installed).
- ❑ Additional shelves.
- ❑ TrueFlex gravity feed organizers.
- ❑ Pricing strips.
- ❑ Remote cabinets (condensing unit supplied by others; system comes standard with 404A expansion valve and requires R404A refrigerant). Consult factory technical service department for BTU information. All remote units must be hard wired during installation.

PLAN VIEW

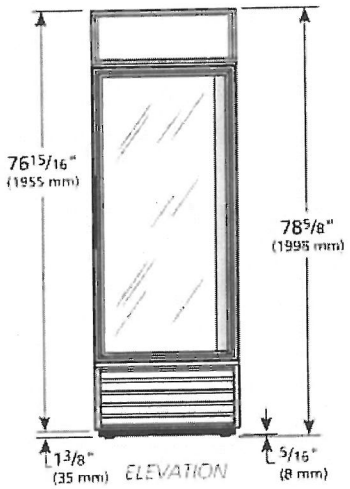

ELEVATION

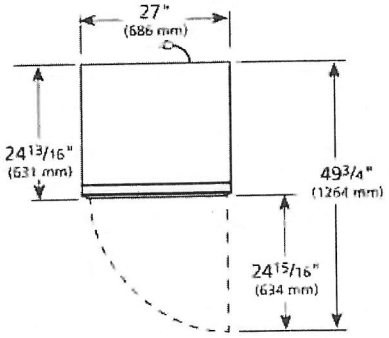

PLAN VIEW

WARRANTY
Three year warranty on all parts and labor and an additional 2 year warranty on compressor. (U.S.A. only)

METRIC DIMENSIONS ROUNDED UP TO THE NEAREST WHOLE MILLIMETER

SPECIFICATIONS SUBJECT TO CHANGE WITHOUT NOTICE

KCL	Model	Elevation	Right	Plan	3D	Back
	GDM-19T	TFAY119E	TFAY119S	TFAY19P	TFAY1193	

TRUE FOOD SERVICE EQUIPMENT
2001 East Terra Lane • O'Fallon, Missouri 63366 • (636)240-2400 • Fax (636)272-2408 • (800)325-6152 • Intl. Fax# (001)636-272-7546 • www.truemfg.com

PIPER DISPENSERS

Tray & Silverware Dispensers

JOB_____ ITEM # _____ QTY # _____

- ❑ ATCA-ST-OSW8-1014
- ❑ ATCA-ST-OSW8-1216
- ❑ ATCA-ST-OSW8-1418
- ❑ ATCA-ST-OSW8-1520
- ❑ ATCA-ST-OSW8-1622
- ❑ 2ATCA-ST-OSW8-1014
- ❑ 2ATCA-ST-OSW8-1216
- ❑ 2ATCA-ST-OSW8-1418
- ❑ 2ATCA-ST-OSW8-1520
- ❑ 2ATCA-ST-OSW8-1622

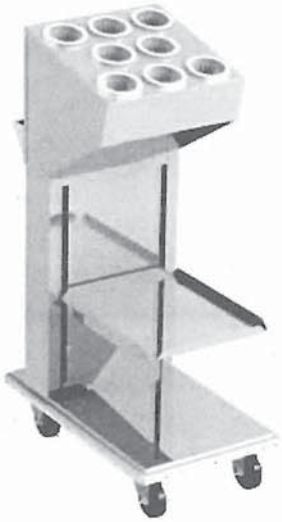

ATCA-ST-OSW8-1014

CANTILEVER STYLE, MOBILE ADJUSTABLE

CAPACITY-Approx. 100 to 150 trays and 35-40 pieces of silverware in each cylinder.

Dispenser shown with optional silverware cylinders and wrap-around bumper.

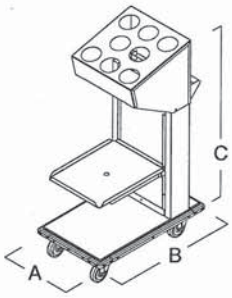

MODELS / DIMENSIONS

	Model #	Max Tray Size	A	B	C
❑	ATCA-ST-OSW8-1014	10 x 14	13"	24"	50"
❑	ATCA-ST-OSW8-1216	12-1/4 x 16-1/2	14 1/2"	25 1/2"	50"
❑	ATCA-ST-OSW8-1418	14 x 18	16"	27 1/2"	50"
❑	ATCA-ST-OSW8-1520	15-1/4 x 20-1/2	17"	30 1/2"	50"
❑	ATCA-ST-OSW8-1622	16 x 22	18 1/2"	32"	50"
❑	2ATCA-ST-OSW8-1014	10 x 14	25 1/2"	24"	50"
❑	2ATCA-ST-OSW8-1216	12-1/4 x 16-1/2	29 1/2"	26"	50"
❑	2ATCA-ST-OSW8-1418	14 x 18	32 1/2"	27 1/2"	50"
❑	2ATCA-ST-OSW8-1520	15-1/4 x 20-1/2	39"	30-1/2	50"
❑	2ATCA-ST-OSW8-1622	16 x 22	37 1/2"	32"	50"

OPTIONS

	Part #	Description
☒	WB	Two locking casters
❑	PB	Perimeter bumper
☒	B	Corner bumper
☒	Y4	Polyurethane 4" casters (set of 4)
❑	Y5	Polyurethane 5" casters (set of 4)
❑	159-2701	Silverware Cylinder, plastic (each, 8 required)
☒	011-3842	Silverware Cylinder, stainless steel (each, 8 required)
❑	341-3483	Napkin Dispenser, folded napkin 3-1/2" x 7"
❑	I (for carts)	Silverware, identity labels (knives, forks, t-spoons)

Shipping weight: 175 lbs

SPECIFICATIONS

Model ATCA-ST-OSW8 cantilever style, mobile tray and silverware dispenser.

FRAME AND BODY:

The unit is constructed of all welded heavy gauge stainless steel. The body is stainless steel on all sides and top. The front panel is removable for adjustment access. The top is fitted with a stainless steel sloped overhead-type silverware dispenser, enclosed on all four sides and provided with eight openings for insertion of round silverware cylinders.

DISPENSING MECHANISM

The tray carrier, constructed of all welded 16 ga. stainless steel, is raised by a series of coil springs attached to the frame. Ball bearing guides and a single stainless steel aircraft type cable keep the carrier level in all directions, even with an unbalanced load. The cable runs over pre-lubricated plated steel pulleys.

ADJUSTMENT

Adjustment for various tray weights is easily accomplished by removing the front panel, then engaging or disengaging individual springs as required.

CASTERS

The unit is mounted on four 4" diameter, heavy duty, swivel, casters with non-marking rubber tires.

LIMITED WARRANTY: PIPER PRODUCTS warrants to the original purchaser parts and labor for a period of twelve (12) months from the date of purchase. See manufacturer's complete warranty for details.

It is our policy to build equipment which is design certified by companies that have been accredited at the Federal Level by the Occupational Safety and Health Agency (OSHA) and ANSI as a National Recognized Testing Laboratory. These companies include CSA International, Underwriters Laboratories, and the National Sanitation Foundation. However, a continuing program of product improvement makes it necessary to submit new models to the agencies as they are developed. Consequently, all models may not bear the appropriate labels at all times.

We reserve the right to change specifications and product design without notice. Such revisions do not entitle buyer to corresponding changes, improvements, additions or replacements for previously purchased equipment. Information is not for design purposes.

SPEC E-12

PIPER PRODUCTS
BUILT TO LAST
www.piperonline.net
300 S. 84th Avenue
Wausau, WI 54401
Phone: 800-544-3057
Fax: 715-842-3125

Crathco® BY GRINDMASTER®

Crathco® Beverage Dispensers
Operator Manual

Assembly

1 PLACE BEARING SLEEVE ON GUIDE PIN

Note flat sides on outside of guide pin and on inside of bearing sleeve.
Line flat sides up until bearing sleeve slides down over guide pin and rests on the cooling plate.

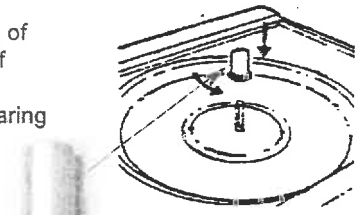

Bearing Sleeve

2 PLACE IMPELLER OVER BEARING SLEEVE.

Put impeller over bearing sleeve with fin side up.

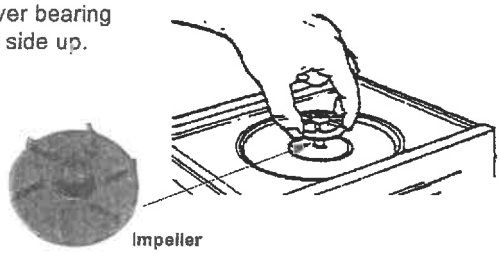

Impeller

3 PLACE BOWL GASKET ON BOWL

Turn bowl upside down and place bowl gasket over the neck of the bowl. Moisten gasket with water or or thin film of lubricant.
NOTE: On D112 units place bowl gasket around cooling dome.

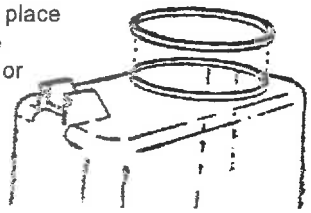

4 PUT BOWL ON BASE

Place the neck of the bowl over center of the cooling plate and with a back and forth downward motion, push bowl down into place.

NOTE: On D112 units, place bowl over the gasket and cooling dome with the neck of the bowl centered on the cooling dome.

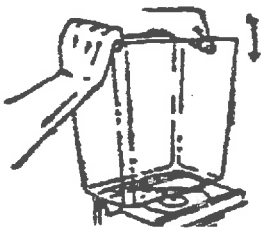

5 PLACE PUMP COVER OVER GUIDE PIN

Place the pump cover over the guide pin with the spray tube toward the front.
Note that the tab on the front of the pump cover fits between the 2 locator buttons or ridges on the bowl. Mini units - bent part of spray tube faces front of bowl.
NOTE: Use agitator cover in place of pump cover and spray tube for fresh juice, drinks that foam (iced tea or dairy products), or heavy viscous drinks.

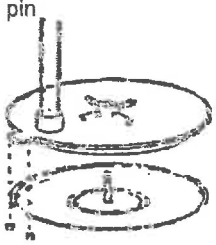

6 INSTALL LOCKDOWN WASHER OR CLAMPS

Standard Units:
- Place lockdown washer over guide pin.
- Push lockdown washer down and into locking keyway.
- Turn lockdown washer clockwise to lock into place.

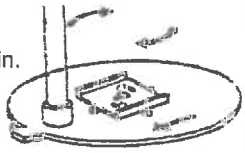

Mini Units:
- Place lockdown washer over guide pin.
- Push lockdown washer down and into locking keyway.
- Slide into locked position.

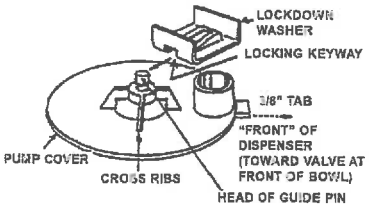

D112 Superbowl Units:
- Insert each lockdown clamp in a lockdown pin and snap down into place. (Lock down 2 clamps closest to the front of the bowl first.)

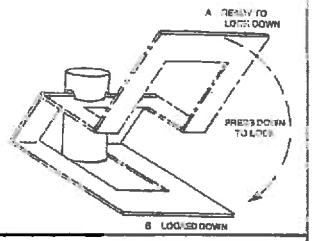

7 ASSEMBLE VALVE AND HANDLE

Place handle (C) in the two V-cuts in the front of the handle bracket (B) and push handle back.
From inside bowl, lower the valve (A) through the outlet hole, and through the hole in the handle.
Release handle.

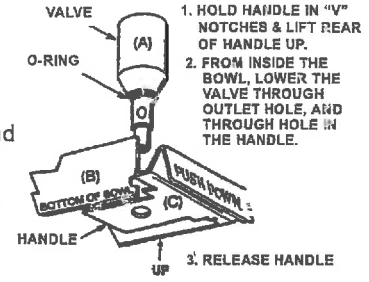

8 REPLACE DRIP PAN(S)

Place cover/grid on drip pan.
Place top edge of drip pan up under lip on front panel.
Lower each drip pan so that the tab goes down into the tab slot and locks pan in place.

Regular units proceed to step 15.
Whipper units proceed to step 9.

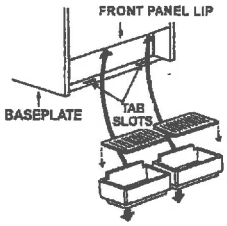

Assembly (cont.)

9 **(WHIPPER UNITS ONLY)**

PRESS SPRING UP INTO PLACE AGAINST THE BOTTOM OF THE BOWL.

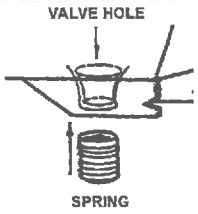

10 **(WHIPPER UNITS ONLY)**

INSERT HANDLE INTO "V" NOTCHES IN BOWL AND PLACE VALVE INTO HOLE (INSIDE BOWL).

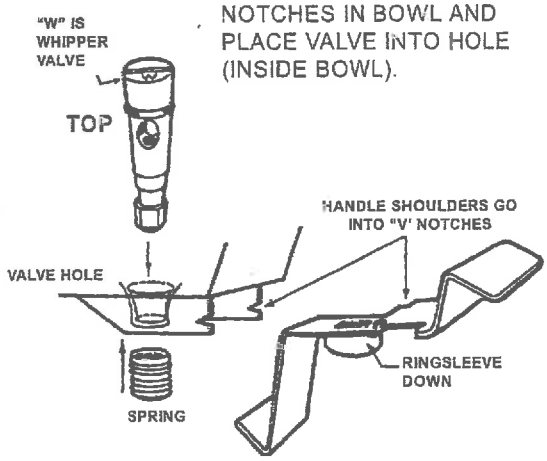

11 **(WHIPPER UNITS ONLY)**

TURN VALVE 90° TO LOCK.

Cross slot (located on top of valve) should run left to right across the bowl when locked.

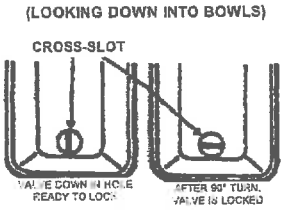

12 **(WHIPPER UNITS ONLY)**

PUSH WHIPPER BLADE INTO PLACE.

Replace the whipper blade by lining up the flat inside the blade with the flat side of the motor shaft. Push blade firmly into place.

13 **(WHIPPER UNITS ONLY)**

REPLACE WHIPPER CHAMBER

Replace whipper chamber by positioning the medium-sized opening up and tilting 1/8 turn to the right. Put whipper chamber over whipper blade and turn to the left until it locks into place.

14 **(WHIPPER UNITS ONLY)**

ASSEMBLE THE RUBBER INLET ADAPTER

Assemble white rubber inlet adapter by stretching one end over the large tubular inlet on top of the whipper housing. Attach the other end over the ring sleeve on the underside of the handle.

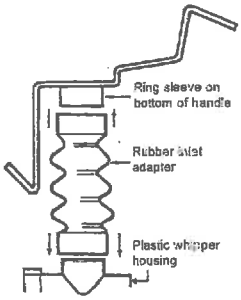

15 FILL BOWL(S) WITH PRODUCT and place lid(s) on bowl(s).
Turn spray switch on first then refrigeration.

IMPORTANT: NEVER RUN REFRIGERATION UNLESS SPRAY OR AGITATE IS ON.

DISASSEMBLY

1 DRAIN ALL BEVERAGE FROM BOWLS

A. Remove bowl lid(s) and drip tray(s)
B. Drain through valve then
C. Tip unit forward, gently press spray tube back a short distance to lift the edge of the pump cover to allow remaining beverage in well to be drained through valve.

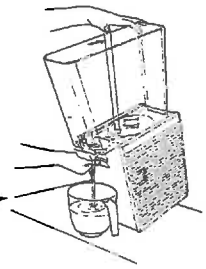

2a.

STANDARD & MINI UNITS:
REMOVE VALVE AND HANDLE
Lift valve. Handle drops into operator's other hand.

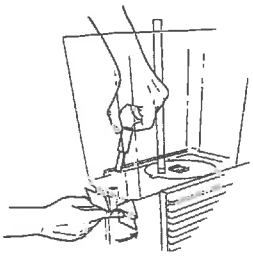

2b.

WHIPPER UNITS:

- DISASSEMBLE THE RUBBER INLET ADAPTER
  Remove one end from the large tubular inlet on top of the whipper housing and the other end from the ring sleeve on the underside of the handle.

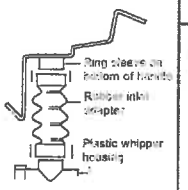

- REMOVE WHIPPER CHAMBER
  Turn whipper chamber to the right until it releases and you can pull it off of the whipper blade.

- REMOVE WHIPPER BLADE
  Pull whipper blade off of the motor shaft.

- TURN VALVE 90° TO UNLOCK. REMOVE HANDLE AND VALVE.
- REMOVE SPRING FROM BOTTOM OF BOWL.

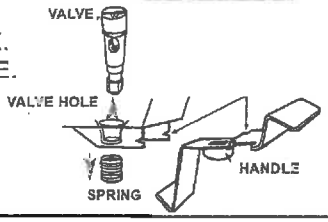

3 REMOVE LOCKDOWN WASHER(S)

Standard Unit: Twist lockdown washer counterclockwise, slide to release keyway. Then lift out.

Mini Unit: Slide to release keyway, then lift out.

D112 Unit: Release each clamp.

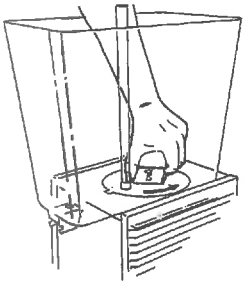

4 REMOVE PUMP COVER

Remove pump cover by lifting up on spray tube.

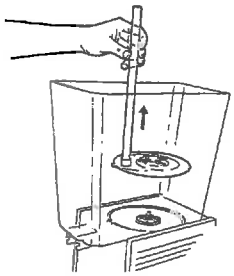

5 REMOVE BOWL AND BOWL GASKET

Twist bowl back and forth while lifting up. Bowl gasket will be around bottom of bowl.

NOTE: On D112 units, bowl gasket will be around cooling dome.

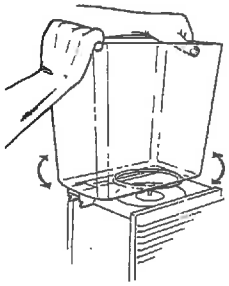

6 REMOVE IMPELLER AND BEARING SLEEVE

Remove impeller and bearing sleeve by lifting them straight up.

NOTE: Check impeller and bearing sleeves for wear.
See page 5.

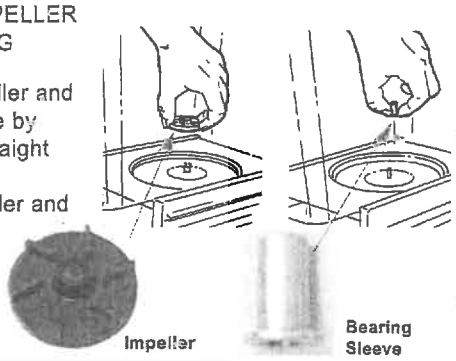

7 THOROUGHLY CLEAN ALL PARTS IN WARM WATER USING A MILD NON-ABRASIVE DETERGENT AND RINSE THOROUGHLY.

CAUTION: ABRASIVES WILL SCRATCH PLASTIC PARTS. WASH BOWL LIDS IN COOL OR LUKEWARM WATER TO AVOID LEAKS DUE TO SEALED SURFACE BEING DAMAGED.

SANITIZE

Immerse parts in sanitizing solution for 1-2 minutes.
Remove parts from sanitizing solution and drain.
DO NOT RINSE. Place parts on a clean surface to air dry.
Wipe the machine, condensate tray and cooling plate depression with a cloth wetted with sanitizer solution.

IMPORTANT: Never pour dry powder, crystals, or concentrate into a dry bowl. Premixing beverage in separate container is recommended. If mixing in bowl, always add water first.

ROUTINE MAINTENANCE: For all Models

Cleaning Your Dispenser

To optimize performance or when using dairy products, clean unit daily.

Regular cleaning of bowl components will result in maximum pumping efficiency, proper seating and sealing, and prevention of leaks at the valve O-Ring and bowl gasket by removing dried-on beverage solids and pulp from moving sealed parts.

1. Wash all bowl components regularly. Follow all local health codes.
   * Refer to Disassembly, Cleaning, and Assembly instructions on pages 1-3.

Sanitizing Your Dispenser

* Refer to Disassembly and Assembly instructions on pages 1-3.

1. In the bowl, mix one gallon of Oxford Chemical's Disinfectant/Sanitizer Formula C or its equivalent.
2. Turn on spray motor(s) and allow sanitizer to spray around inside of bowl for a period of time as recommended by the sanitizer manufacturer. Formula C is satisfactory for this purpose when mixed in a solution of 1 liquid ounce of cleaner to 4 gallons of water. Run spray motor(s) for 60 seconds. In areas with extreme hard water, consult the local health authority.
3. Drain sanitizer **completely** and **thoroughly** during each step of the cleaning process (wash, rinse, and sanitize). Refer to tips on draining in Disassembly Guide on page 3.

HELPFUL HINTS

1. **Noisy Impeller:** Do not run impeller dry. The impeller will make a chattering sound in an empty bowl. Remove the impeller and run a small amount of water in the bowl.
2. **Valve and O-Ring:** On the first installation, if there is an after-drip, place your hand on the valve and with a slight downward pressure turn it slightly. This will help seat the o-ring so that it is properly aligned with the valve seat. If an o-ring becomes cut or worn it should be replaced. If you are pumping a product which has excessive pulp, a separate valve weight may be purchased to add extra weight so the o-ring will press down against the pulp and guarantee a positive shut-off.
3. **Valve Cap Use:** The Valve Cap (Part # 2039) insures that a tight valve seal will occur with products containing heavy pulp. The Valve Cap can be installed by placing it on top of the Valve after the Valve has been assembled into the bowl. See Figure A.
4. **High Water Marks on Bowl:** When you agitate, you may get "high water marks" as the beverage level drops. Keep the bowl as full as possible. Frosted bowls are available which are helpful in reducing the appearance of water marks.
5. **To Spray or Not to Spray:** Most beverages can be sprayed. It is best not to spray iced tea, iced coffee, natural juices, or beverages that foam (whipped drinks). A special agitator plate is used in place of a pump cover and spray tube to promote circulation.
6. **Proper Cooling:** Always keep spray switch on when refrigeration switch is on. A unit <u>must</u> spray or agitate to cool. Failure to do this will cause impeller to lock-up. The dispenser is designed to run 24 hours a day. Keep both spray and agitate on when beverage is in the bowls.
7. **Condensation:** Condensation on the bowls and lids is natural, cool, and refreshing. The amount of condensation is affected by humidity. Condensation will run down the front panel into the drip tray. Remember to occasionally empty the drip trays.
8. **Single Bowl Operation:** if you find it necessary to run your dispenser with only one bowl containing beverage, put one half (1/2) cup of water in the unused cooling plate depression(s) for best one-bowl operation and efficiency.

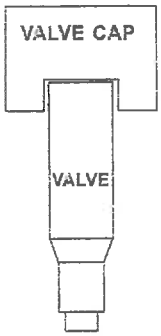

Figure A

PREVENTATIVE MAINTENANCE

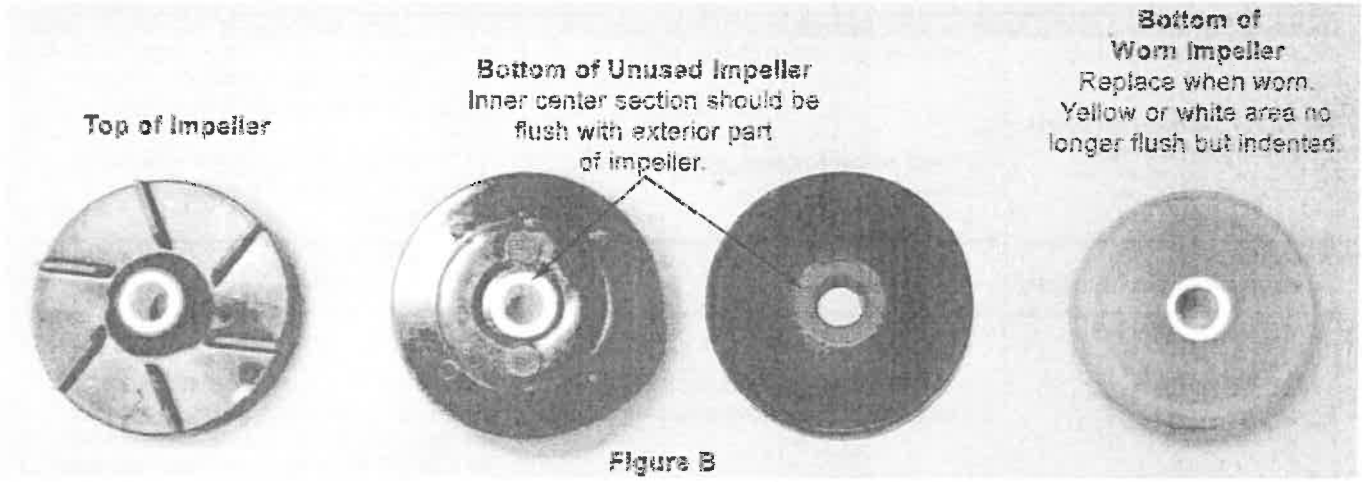

Figure B

1) Wash all bowl components regularly.
2) Wash impeller and bearing sleeve individually and check for wear.
   a) Check for wear on bearing sleeve (flange should be 1.77mm thick - thickness of penny or quarter). (Figure C)
   b) Check for wear on impeller (inner white center section should be flush with colored part of impeller). (Figure B)
   c) If bearing sleeve or impeller do not spin freely or are worn - replace them. (Figure F)
   d) Worn parts can cause personal injury, impair cooling and can damage machine. (Figure D & E)
3) Check valve o-rings and bowl gaskets for wear or damage - replace every 6 months or as needed.
4) Every 6 months or more often if needed: unplug unit, remove panels, clean condenser and interior. (Remove dust and lint from fins with a soft brush and vacuum.)
5) For further information, visit www.grindmaster.com or call (800) 695-4500.

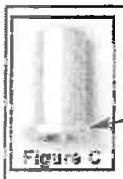

Figure C

New bearing sleeve

flange (approx. 1.77mm - thickness of penny or quarter)

Figure D

Worn bearing sleeve (replace when worn to approx. 1mm or 1/2 thickness of penny or quarter).

worn flange

Figure E

Bearing sleeve with flange missing is extremely worn. Discard immediately.
CAUTION: Handle with care. Sharp edges may cause personal injury or damage to machine.

Figure F

Bearing sleeve and impeller should spin freely when held like this. If parts do not spin freely or are worn, unit will not cool properly and worn parts may damage machine.

Part #s for Preventative Maintenance	
Description	**Part #**
Bearing Sleeve (all units except D112)	3220
Large Blue Impeller (D & WD model)	1161
Small Red Impeller (E model)	1008
Universal Impeller (all models)	3587
Valve O-ring	1012
Bowl Gasket - for D, WD models 5 gallon (or 3 gallon) bowl	1013
Bowl Gasket for E model and/or 9 liter bowl	2010
Bowl Gasket for 12 gallon SuperBowls (D112)	1150
Bearing Sleeve for 12 gallon Super Bowl (D112)	1983

Universal Impeller (Part # 3587)

TROUBLESHOOTING GUIDE

PROBLEM	POSSIBLE CAUSE	SOLUTION
No or partial Refrigeration: Compressor Runs NOTE: Unit must spray or agitate properly to obtain cooling	• Condenser clogged with dust or lint • Unit not properly spraying or agitating • Faulty fan motor • Loss of refrigerant	• Unplug unit, remove panels and clean out all lint and dust from condenser and inside machine. Use vacuum cleaner or bottle brush. • See "Problem" - "No Spray or Agitation" • Replace motor (call for service) • Call for service
No Refrigeration: Compressor Does Not Run		• Call for service
No Spray or Agitation: Spray Motor Runs Chattering Impeller	 • Impeller does not spin; check for worn bearing sleeve and/or impeller (see page 5) • Impeller chatters and/or does not spin properly	 • Replace sleeve and/or impeller if worn. • If using a dairy based product, make sure you are using the correct impeller (blue or red with "M" on bottom or a black Universal Impeller) • If not worn, clean impeller and bearing sleeve. Impeller must spin freely on bearing sleeve to spray and refrigerate properly. • Raise drive magnet higher on motor shaft, but not high enough to rub. (Call for service or see service manual)
No Spray: Spray Motor Does Not Run		• Call for service
Leaky Bowl	• Gasket improperly installed • Worn or nicked bowl gasket	• Reinstall gasket. Check directions for bowl assembly. • Replace gasket
Leaky Valve	• Foreign particles on valve, o-ring or valve stem • Nicked or cut o-ring • O-ring twisted so will not seat uniformly	• Clean valve and o-ring • Replace o-ring • Remove and remount
Noisy Unit	• Worn bearings in either fan motor or spray motor(s) • Bent fan blade	• Replace motor(s) (call for service) • Unplug unit and re-bend fan blade to correct alignment

If you still need help, call an authorized service center in your area or call Grindmaster Corporation's Technical Service Department. You can reach Technical Service at (800) 695-4500 (USA & Canada only) or 1-502-425-4776 Monday-Friday, 8:00 AM-6:00 PM Eastern Standard Time.
Please have the model and serial number ready so that accurate information can be given.
Prior authorization must be obtained from Grindmaster Corporation's Technical Service Department for all warranty claims.

STANDARD BOWL ASSEMBLY PARTS

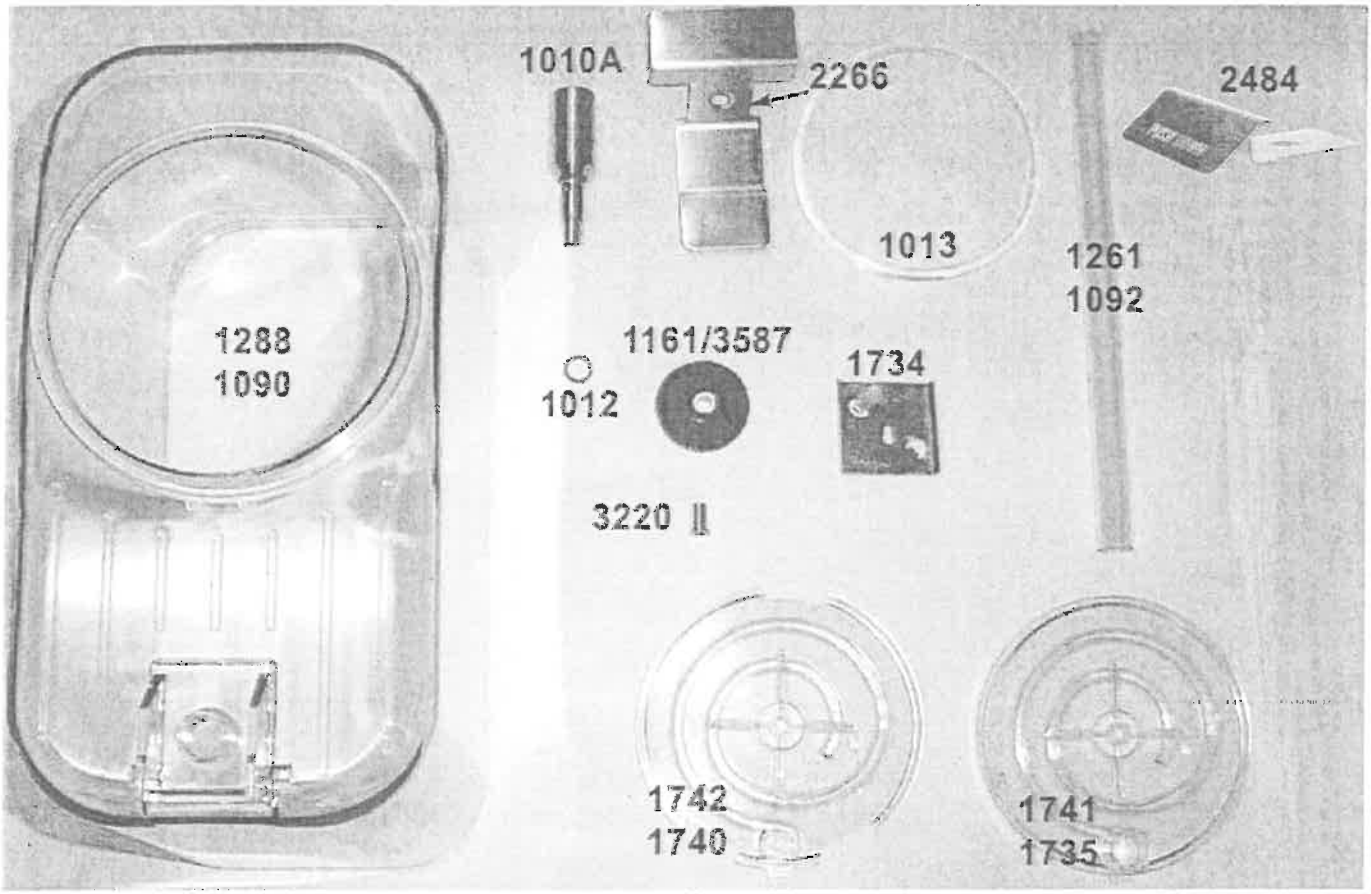

Part #	Description	Models Used On
1010A	Dispense Valve w/ O-ring	All standard (non-whipper)
1012	O-ring for Dispense Valve	All
1013	Standard Bowl Gasket	All D15, D25, D35, HD and WD models (for 5 & 3 gallon bowls)
1090	3 Gal. Bowl	All D15, D25, D35, HD and WD models
1092	3 Gal. Bowl Spray Tube	All D15, D25, D35, HD and WD models w/ 3 gal. bowls
1161	Standard Bowl Impeller (blue)	All D, HD and WD models
3587	Universal Impeller (black)	All models
1261	5 Gal. Bowl Spray Tube	All D15, D25, D35, HD and WD models w/ 5 gal. bowls
1288	5 Gal. Bowl	All D15, D25, D35, HD and WD models
1734	Washer, Lockdown	All D15, D25, D35, HD and WD models
1735	Standard Bowl Pump Cover for Red (p/n 1008) or Black (p/n 3587) Impeller (use with spray tube)	All D15, D25, D35, HD and WD models
1740	Agitator for use with Red (p/n 1008) or Black (p/n 3587) Impeller	All D15, D25, D35, HD and WD models
1741	Standard Bowl Pump Cover for Blue Impeller (use with spray tube)	All D15, D25, D35, HD and WD models
1742	Standard Bowl Agitator for Blue Impeller (for iced tea, viscous products, or orange juice)	All D15, D25, D35, HD and WD models
2231	Plastic Drip Tray	D15-4, D25-4, D35-4, E27-4, D112-4, HD & WD models
2232	Plastic Drip Tray Grid	D15-4, D25-4, D35-4, E27-4, D112-4, HD & WD models
2240	Standard Bowl Lid	All D15, D25, D35 and WD models (Do not use on HD models)
1116	Bowl Lid for Heated Units	HD (heated models)
2243	Stainless Steel Drip Tray	D15-3, D25-3, D35-3, D112-3 and HD-3 models
2266	Dispense Valve Handle	All standard (non-whipper)
2484	Non-Contact Handle	All standard (non-whipper)
2305	Stainless Steel Drip Tray Grid	D15-3, D25-3, D35-3, D112-3 and HD-3 models
3220	Bearing Sleeve	All

Mini Bowl (E27 & E47) Bowl Assembly Parts

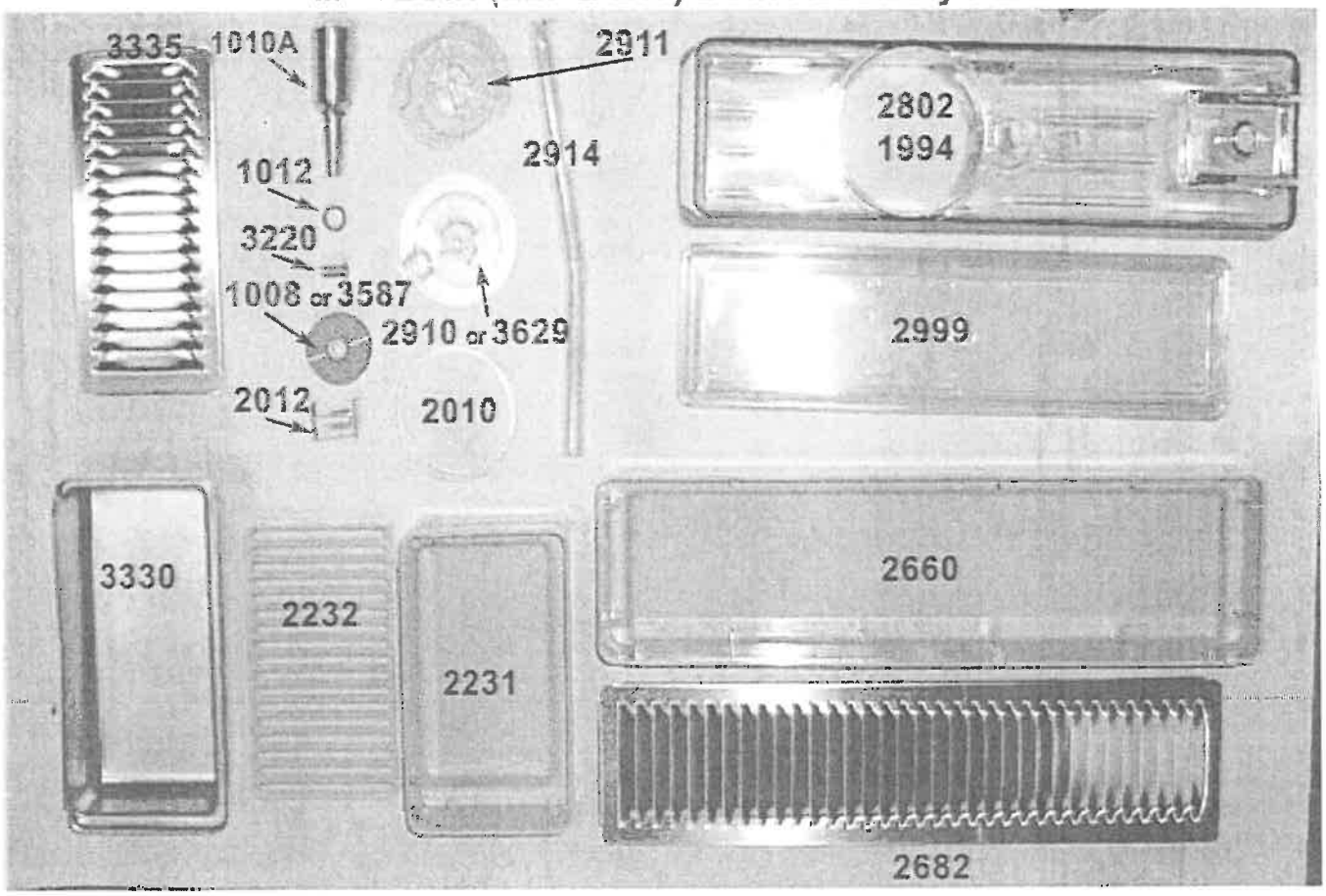

Part #	Description
1008	Mini Bowl Impeller (red)
1010A	Dispense Valve w/ O-ring
1012	Dispense Valve O-ring
1994	7 Liter Bowl
2010	Mini Bowl Gasket
2012	Mini Bowl Lock Washer
2231	Mini Twin Plastic Drip Tray
2232	Mini Twin Plastic Drip Tray Grid
2266	Dispense Valve Handle (pictured w/ std bowl assembly photo)
2484	Non-Contact Handle (pictured w/ std bowl assembly photo)
2660	Mini Quad Drip Tray (Plastic)
2682	Mini Quad Drip Tray Grid
2802	Standard 9 Liter Bowl
2910	Mini Bowl Pump Cover (use w/ spray tube) use w/ red impeller (p/n 1008)
2911	Mini Bowl Agitator (use with iced tea, orange juice, and viscous products)
2914	9 Ltr. Mini Bowl Spray Tube
2999	Cover for 9L Bowl
3220	Bearing Sleeve
3330	Stainless Steel Drip Tray, E27, E47
3335	Stainless Steel Drip Tray Grid, E27, E47
3587	Universal Impeller (black)
3629	Mini Bowl Pump Cover - use with black impeller (p/n 3587)

Super Bowl (D112) Bowl Assembly Parts

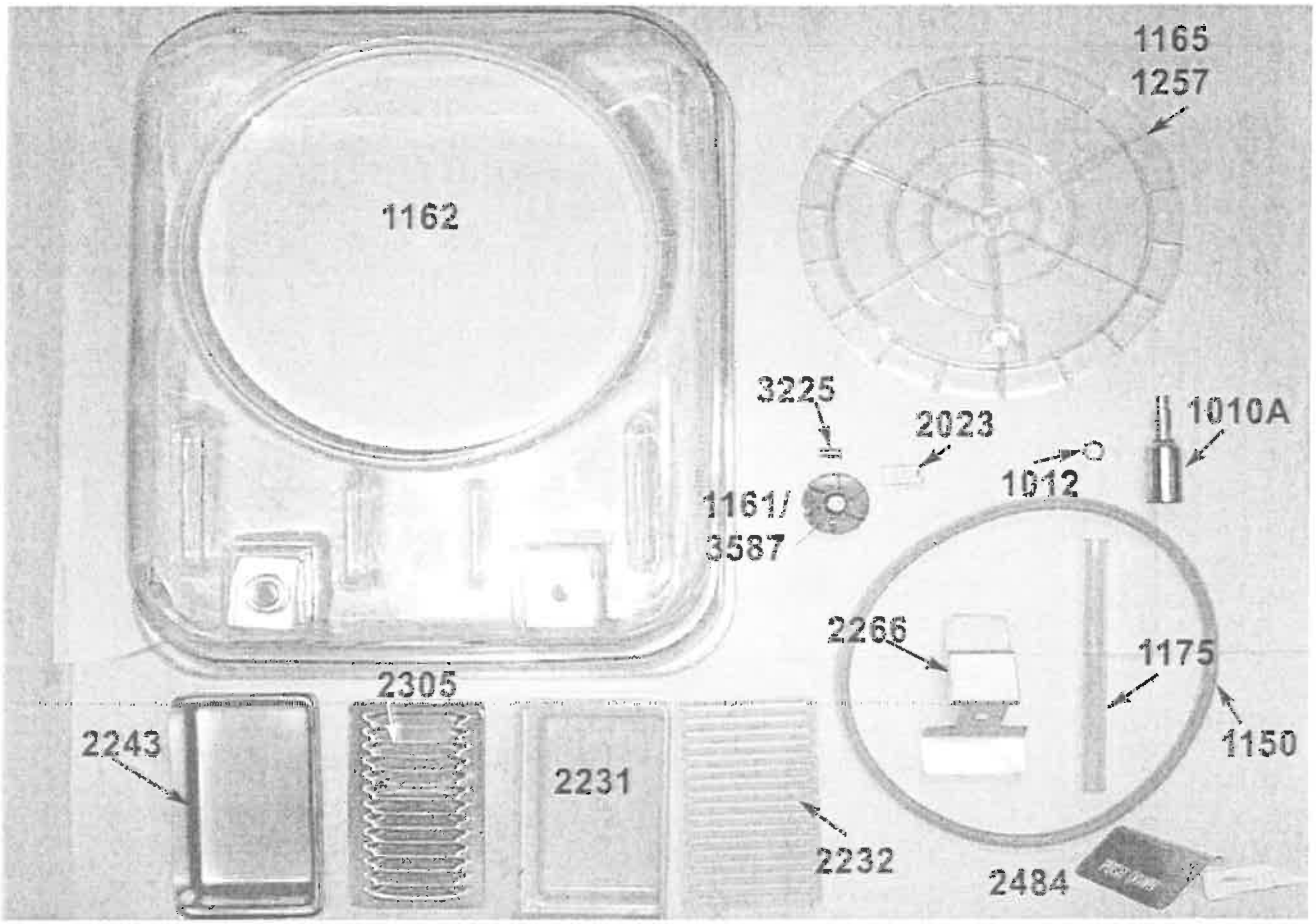

Part #	Description	Models Used On
1010A	Dispense Valve w/ O-ring	All Standard (non-whip)
1012	O-ring for Dispense Valve	All
1150	Bowl Gasket	D112
1155	Super Bowl Lid	D112
1161	Impeller (blue)	All D, HD, and WD models
1162	Super Bowl (12 gal) w/ hardware	D112
1165	Super Bowl Pump Cover (use with spray tube)	D112
1175	Super Bowl Spray Tube	D112
1257	Agitator (use in place of pump cover and spray tube for iced tea, orange juice, and viscous products)	D112
2023	Lockdown Cam	D112
2231	Plastic Drip Tray	D15, D25, D35, E27, D112, HD15, and all WD models
2232	Plastic Drip Tray Grid	"
2243	Stainless Steel Drip Tray	All D, HD, and WD models
2266	Dispense Valve Handle	All Standard (non-whipper)
2484	Non-Contact Handle	All Standard (non-whipper)
2305	Stainless Steel Drip Tray Grid	D15, D25, D35, D112, HD15, and all WD models
3225	Bearing Sleeve	D112
3587	Universal Impeller (black)	All models

Whipper Unit Parts (Different from Standard)

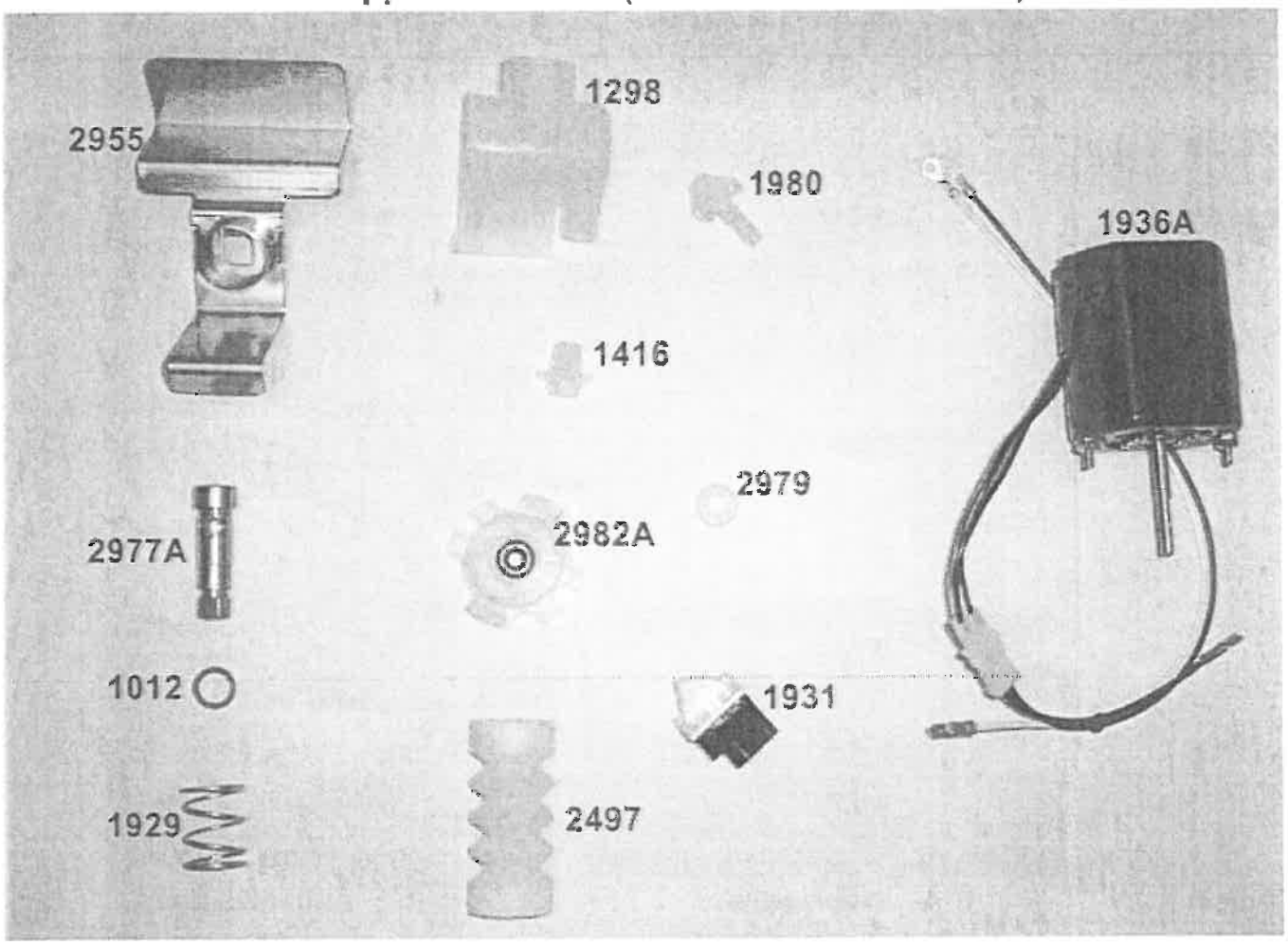

Part #	Description
1012	Dispense Valve O-ring
1298	Whipper Housing Chamber
1416	Whipper Assy Restrictor Valve
1929	Whipper Assembly Spring
1931	Whipper Activation Switch
1936A	Whipper Motor w/ Harness
1980	Whipper Blade
2497	Inlet Whipper Adapter
2955	Whipper Dispense Valve Handle
2977A	Whipper Dispense Valve w/ O-ring
2979	Slinger Washer
2982A	Whipper Base

MCX Mag-Drive™ Impeller

by Crathco®

Purely the Best

Features:

Proprietary one-piece design using advanced, magnetic compound material...

- Smooth surfaces assure complete sanitizing
- High performance nylon bearing - harder material for longer life
- More powerful and efficient action
- One size fits all - use in all types of beverages and all models
- Common parts for lower inventory
- Crathco Bubblers™ -
  - * Built simple
  - * Built stronger
  - * Built to last

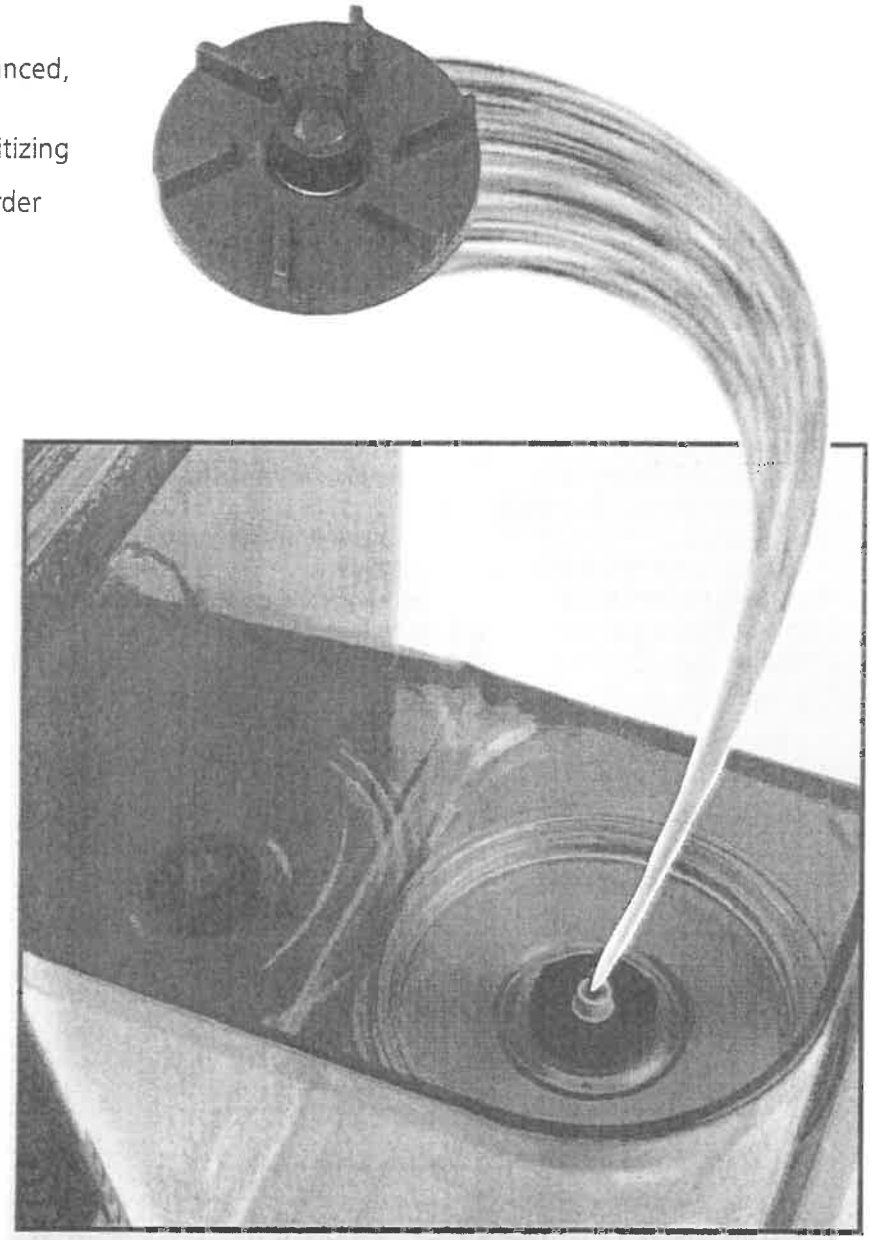

Specifications and Use:

- Part #: 3587
- Recommended for use in all models (standard, mini, and super)

Bowl size	Recommended Pump Cover (when spraying)	Recommended Agitator (when not spraying)
9L - 2.4 gal. (or 7L)	part # 2910	part # 2911
18L - 5 gal. (or 3 gal.)	part # 1735 (1741 may also be used on 60 Hz units)	part # 1740 (1742 may also be used on 60 Hz units)

SET-UP

UNPACKING

Your dispenser is packed in 2 cartons: base pack and bowl pack. Unpack base by opening bottom flaps. See Figure G.

IMPORTANT NOTES:

1. Do not leave base upside down as this can damage refrigeration system.
2. Check that all 4 rubber feet are attached to legs after removing from base pad. Check base pad or carton for missing feet and replace on legs.
3. Never lift from louvres/ventilation slots. Instead, place fingers under base plate.

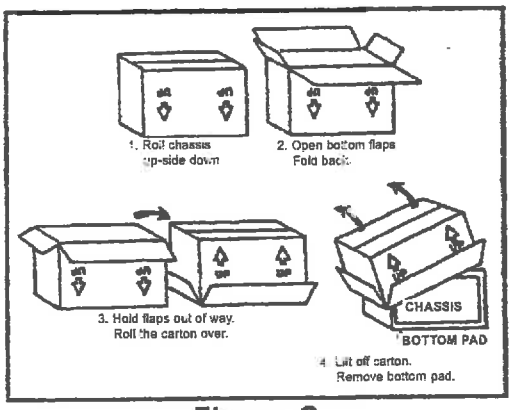

Figure G

INSTALLATION

1. Place base on counter.
2. For heated units (HD15/WHD15) units only:
   Install Safety Arms
   Tools required: Phillips Head Screwdriver
   a) Place unit on its side so you have access to the bottom of the unit.
   b) Line up arm holes so they line up to the holes on the bottom of the unit; arms will extend forward as shown in illustration. See Figure H.
   c) Attach arms with screws provided.
3. Leave sufficient air space (6"(15cm)) on sides (also rear of D35 triple) for proper airflow and efficient operation. See Figure I.
   IMPORTANT: Failure to provide required airspace can damage unit.
4. Plug into properly grounded, 3 prong outlet.
5. Assemble bowl parts and drain trays. See Assembly instructions (pgs 1-2). See Figure J.

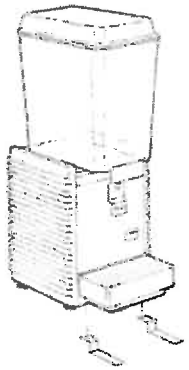

Figure H

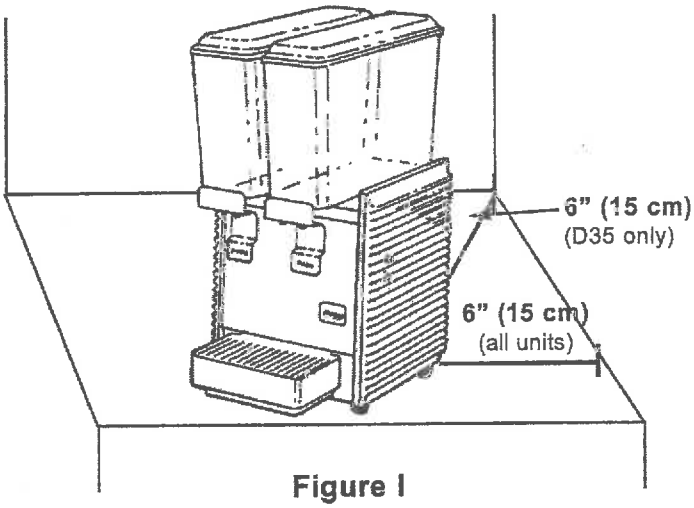

Figure I

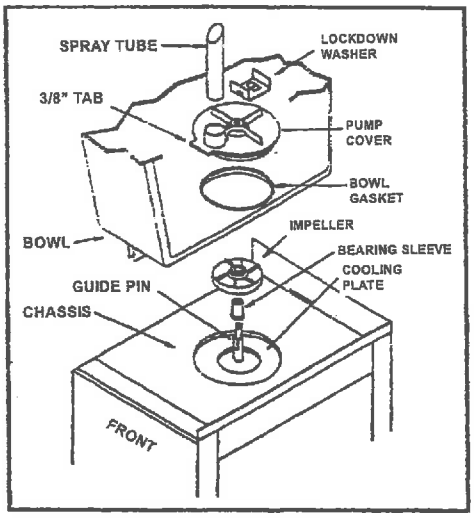

Figure J

GRINDMASTER
CORPORATION

Tel (502) 425-4776 • Fax (502) 425-4664 • 1-800-695-4500 • www.grindmaster.com • email: info@grindmaster.com

© Grindmaster Corporation, 2004
PRINTED IN USA

0607 Form # CC-377-06
Part # 3682

GRINDMASTER™
CORPORATION

Item # _____
Project _____
Date _____

Triple Space Saver Urn

Dual Wall Insulated
Pump Type Brewing System

Models 8303, 8306, 83010
Electric

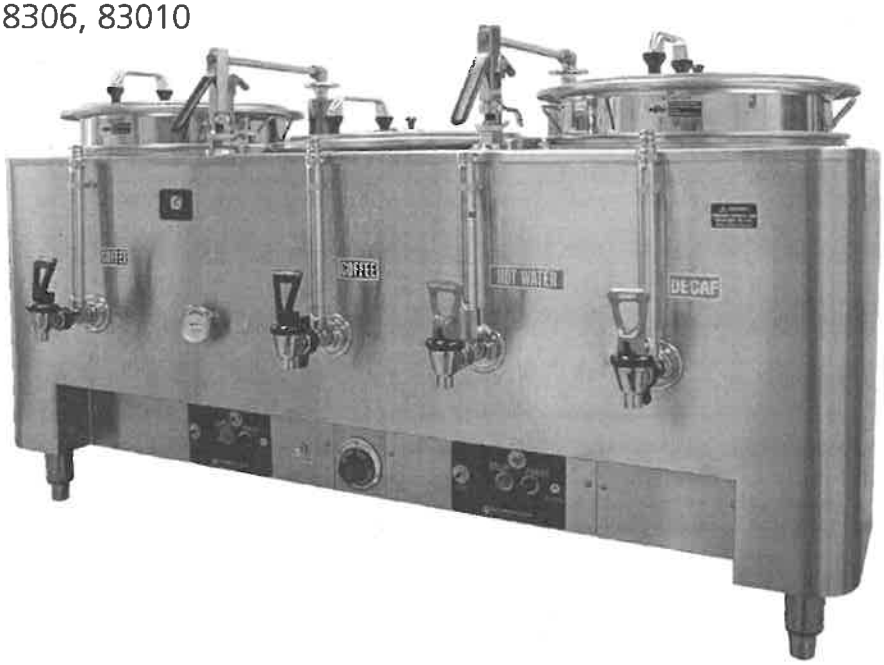

Features:

- **Pump Style Brewing Systems**
  Water is heated in large water compartment and is sprayed over the grounds by two independently controlled water pumps.
- **Electropolished Liners**
  Smooth surface on coffee liners for easy cleaning
- **Dual wall urn body with fiberglass insulation**
  Energy Savings minimizes heat loss, saves air-conditioning costs.
- **Dual Spray Arms**
  Two independent brewing systems with two spray arms allows for simultaneously brewing of regular and decaffeinated coffee.
- **Durable Construction**
  All A.I.S.I. type 304, 18-8 stainless steel
- **Constant Brew Temperature**
  Brew temperature varies less than 5°F (3°C) throughout spay over
- **Automatic Coffee Agitation**
  Thoroughly mixes brewed coffee immediately after spray over is completed
- **Automatic refill of water compartment**
  Water compartment automatically refills and reheats as needed.
- **Low water cutoff System**
  Protects heating elements from burn out, at start-up or in operation.
- **Velvet Smooth Spray Arm**
  Teflon® coating on spray arm piston prevents liming and insures smooth operation. Positive "stops" on spray arm for operator ease.

Easy to operate:

- **Fully Automatic – Push Button Operation**
  Simply load brew basket with coffee, align spray arm over basket lid hole and press brew start button.
- **Easy Adjustment of spray over rate**
  Simple screwdriver adjustment. No awkward changing of parts.
- **Adjustable Bypass valve on spray arm**
  Enables proper coffee extraction even with variable water conditions
- **Dial Thermometer with color-marked brew zone.**
- **Thermostat adjustable from front**
  Knob on thermostat has four marked positions: Brew, Hold, Night Standby and Off.

Serviceable:

- **Drain valve in bottom**
- **Control drawer with all electrical components is accessible from the front**

Triple Space Saver Urn
Dual Wall Insulated
Pump Type Brewing System

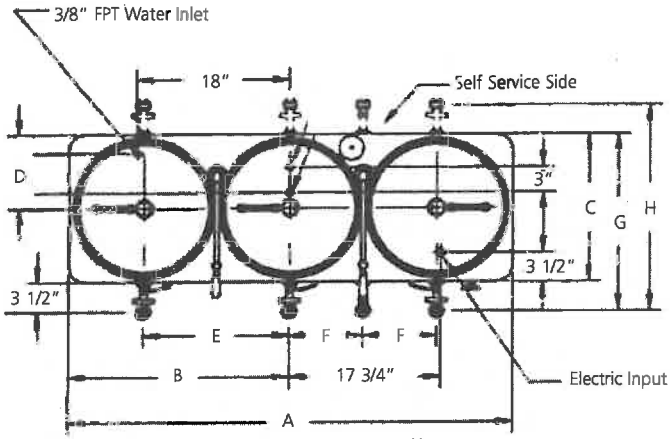

Note:
Faucets On Self Service
Only When Specified

Model No.	8303	8306	83010
Coffee Capacity (each liner)	3 gal.	6 gal.	10 gal.
Actual Brew Time Per Liner	6 minutes	9 minutes	14 minutes
Brews Per Hour	12	8	5
Gallons Per Hour	36	48	50
Number of 5 oz. Cups Per Hour	920	1230	1280

Brew Basket Selection Chart					
Brews	3 Gal.	6 Gal.	10 Gal.	1/2 Batch on 6 Gal.	1/2 Batch on 10 Gal.
Part No.	BB3	BB6	BB810	BB3-1.5	BB810-6

NOTE: All SS Permanent Filter Brew Basket with SS woven wire cloth bottom is available. Filter paper is available from our stock. See price list. Two stainless steel baskets included.

Design Specification (Fill in the blanks)

Coffee urn, fully automatic triple _____ gallons each. Pump style brewing system. Electric service. All controls to be located in recessed base of urn and operate on 120VAC. Dual wall fiberglass insulated. All AISI 304, 18-8 stainless steel construction. To include: positive low water cutoff system, automatic refill, automatic air agitation with top coffee gage fittings, bypass on spray arm, variable brew volume, electropolished liners and two all stainless steel brew baskets for paper filters. Two year parts, one year labor warranty included. U.L. listed, NSF approved.

Model Number	A	B	C	D	E	F	G	H	Work Height	Overall Height
8303	47"	23-1/2"	16-1/4"	8-1/8"	15-1/2"	7-3/4"	19-3/4"	23-1/4"	22"	27-1/2"
8306	52-1/4"	26-1/8"	17-3/4"	8-7/8"	17-1/4"	8-5/8"	21-1/4"	24-3/4"	28"	33-1/2"
83010	52-1/4"	26-1/8"	17-3/4"	8-7/8"	17-1/4"	8-5/8"	21-1/4"	24-3/4"	30"	37"

Fast Fill Options

Opt. 56	Jug Fill Funnel and Chain
Opt. 57	Gravity Jug Fill Hose Assembly
Opt. 70T1	High Speed Jug Fill - Coffee Only
Opt. 70T2	High Speed Jug Fill - Coffee and Washer (110 Cord and Plug Required)
Opt. 70T3	High Speed Jug Fill - Coffee and Decaf (110 Cord and Plug Required)
Opt. 70T4	High Speed Jug Fill - Coffee/Water/Decaf (110 Cord and Plug Required)

Model No.	8303		8306		83010	
Heater Size - KW	12 KW	11.5 KW	15 KW		15 KW	
Heater Voltage	240V	208V	240V	208V	240V	208V
Amperes Drawn - 1Ph	50	54	63	72	63	72
Amperes Drawn - 3Ph	29	31	36	42	36	42

For 480-3Ph Supply - divide amperes for 240V-3Ph by 2.
3 Phase 3 wire requires separate 120V supply for controls (7 Amp.)

Electric Services Available

Note: A ground wire must be provided in addition to the wire service shown.

Neutral Wire Required

120/208V - Single Phase - 3 Wire
120/208V - Three Phase - 4 Wire
120/240V - Single Phase - 3 Wire

We Supply 3 Wire Cord & Plug for separate 120 VAC

208V - Single Phase - 2 Wire
208V - Three Phase - 3 Wire
240V - Single Phase - 2 Wire
240V - Three Phase - 3 Wire
480V - Three Phase - 3 Wire - Extra Cost

All services include terminal block connection.

Tel (502) 425-4776 • Fax (502) 425-4664 • 1-800-695-4500 (USA & Canada only)
P.O. Box 35020 • Louisville, KY 40232 • USA
www.grindmaster.com • email: info@grindmaster.com

© Grindmaster Corporation, 1995
PRINTED IN USA

0111 Form # AM-205-06

American Metal Ware® Midline & Space Saver Urns

Operation and Instruction Manual

For

7000, 8000, 9000 and Chinese Tea Urn Series

TABLE OF CONTENTS

Installation....2-3
Operation and Start-up....4
How to Brew....5
Urn Adjustments....5-6
Care and Cleaning....7
Liquid Level Control System....8
Service
- Access Controls....9
- Drain Tank....10
- Remove Liner....10
- Replace Liner....10
- Replace Heater....11
- Replace Thermostat....11
- Convert Between Single/3 PH....11
- Replace Sprayover Pump....11

Troubleshooting....12-15
Parts Illustrations
- High Volume Urns....16
- 7700 Series Urns....17
- 7400 Series Urns....18
- 8000 Series Urns....19

Rough in Specifications
- High Speed Brew Urns (090-999)....20
- Sgl. 7700, 7400 or Chinese Tea Urn Series (A-1184)....21
- Twin 7700, 7400 or Chinese Tea Urn Series (A-890)....22
- Twin 1.5 Gallon Urn (090-749)....23
- 8000 Single Space Saver Urn (090-305)....24
- 8000 Twin Space Saver Urn (090.779)....25
- 8000 Triple Space Saver Urn (091-780)....26

Wiring Diagrams
- All series urns with Air Agitation (091-537)....27
- All series urns with low temp no brew (091-538)....28
- All series urns with no air agitation (091-541)....29
- Diagram for optional seven day timer (A-987)....30
- Diagram for optional high speed fill jug (A-1001)....31
- 208V 240V 2 or 3 heating element wiring, all urns (091-227)....32
- 380V-480V 3PH, 3 element wiring, all urns (091-027)....33

American Metal Ware Midline and Space Saver Models: 7000, 8000, 9000, and Chinese Tea Urn Series.

- Electric heated models have suffix (E).
- Steam heated models have suffix (S).
- Heat exchange urns start in 74, 80, 81, 84, 91 or 99, all without suffix (P).
- Pump models begin in 72, 73, 77, 82, 83, 87, 93, CH, or Models 81 and/or 91 with the second suffix (P).

Your model number is found on the name-plate of the urn below the controls.

Prior authorization must be obtained from Grindmaster Corporation for all warranty claims.

Grindmaster Corporation™
4003 Collins Lane
Louisville, Kentucky 40245 USA
(502) 425-4776
(800) 695-4500 (USA and Canada only)
(800) 568-5715 (technical service only)
FAX: (502) 425-4664
www.grindmaster.com

© Grindmaster Corporation™, 1996
PRINTED IN USA

1204 Form # AM-301-03
Part # 090-082

Installation

WARNING! ELECTRIC SHOCK HAZARD!

INSTALLATION OF THIS APPLIANCE SHOULD BE PERFORMED BY QUALIFIED SERVICE PERSONNEL ONLY. IMPROPER INSTALLATION COULD CAUSE ELECTRIC SHOCK.

See the rough-in drawings for this model for dimensions and locations of electric, steam, and water input.

Positioning

1) Position urn so that the faucets drip into a drip trough or drain receptacle of some type.

2) Level urn both front to back and left to right. The feet are adjustable for this purpose.

IMPORTANT:

THE PERSON INSTALLING THIS COFFEE URN IS RESPONSIBLE FOR ENSURING THAT THE ELECTRIC AND WATER CONNECTIONS MEET THE REQUIREMENTS OF THE NATIONAL ELECTRIC CODE, THE NATIONAL PLUMBING CODE, AND ANY LOCAL ORDINANCES.

DO NOT RUN TUBING, PIPES, CONDUIT OR CABLE UNDER CENTER PORTION OF SPACE SAVER URN. THIS AREA MUST BE KEPT CLEAR FOR SERVICING URN CONTROLS.

Water

1) Cold or hot water (160 degrees F. maximum) may be used. Heat input capacity is ample for the coldest water, and cold water should be used for best brewing results.

2) Provide shut-off valve and union in supply line near urn.

3) Minimum operating pressure at urn should be 30 PSI.

4) Maximum pressure recommended at urn is 70 PSI.

5) Copper tubing should be used for flexibility.

6) To insure pressure at the urn of at least 30 PSI, use 3/8" OD tubing for short runs, 1/2" OD tubing for longer runs, and larger size tubing for unusually long runs. Be sure other appliances will not reduce water pressure excessively.

7) Turn on the water supply line and check for leaks.

Heat Input

Electric Heated Urns, Models with suffix (E):

1) Check rating marking on urn nameplate to be sure electric lines match voltage, phase, and amperage requirements of urn. Select the proper cord and cord grip for electrical rating of the urn. The cord must be an oil resistant type such as SO, SOO, STO, STOO, SEO, SJO, SJOO, SJTO, SJTOO, SJEO, HSO, HSOO, HSJO, or HSJOO. Alternatively, flexible metal conduit and type THHN wires may be used.

2) The terminal block and ground screw are located behind a cover plate on the front, right side of the urn, or inside the control box mounted on right hand side of mid line equipment.

3) A neutral wire is normally required on all single phase and on 208 Volt, 3 phase power supplies to operate 120 VAC control circuit. In the case of single phase, 2 wire service (no neutral), or 3 phase 3 wire service (no neutral), a separate 120 VAC cord and plug (NEMA 5-15P) supplies 120 VAC power to the control circuit (or for use of transformer on heat exchange urns). This cord must be ordered separately.

   WARNING:
   NEVER USE THE GROUND CONDUCTOR AS A NEUTRAL. THIS COULD CAUSE ELECTROCUTION.

4) A fused disconnect switch should be installed near urn.

5) Urn body **MUST** be grounded. A grounding terminal is provided for this purpose.

7) Use only copper wire to connect this urn.

Steam Heated Urns, Models with suffix (S):

1) Steam supply line should have a shut-off valve ahead of the urn. (A strainer and control valve are located in the urn's control compartment.)

2) Steam return lines should be connected to a high-quality steam trap. Also, we recommend including a bypass and test valve to check trap operation while in service.

3) Use unions and/or copper tubing on both the supply and return connections to avoid strain on the urn.

4) A cord and plug (NEMA-5-15P), are attached for electrical control power. Plug cord into a nearby 115 volt, 15 amp, grounded wall outlet, only after the water line is turned on.

Operation and Start-Up

1) Open water supply line valve to urn.

2) Turn on or plug in the power supply to the urn. Water compartment will begin to fill automatically. Do not power up the urn when the water line is off.

3) Pump urns have a fast fill feature. Pump urns have model numbers beginning in 72, 73, 77, 82, 83, 87, 93, and CH with any suffix, or may be any model with second suffix (P). To fill the urn in only ten minutes on these models:

   a) Disconnect power to the urn.

   b) Remove the control drawer in the center, underneath the urn. On triple urns, remove the left drawer. On Midline and Chinese Tea Urns, remove the cover on the side of the control box. Leave the drawer sitting under the urn, making certain no uninsulated live parts are touching the urn body.

   c) Locate the FAST FILL VALVE which is a labeled screw type valve on the water inlet assembly - left side facing the urn.

   d) Open the valve completely.

   e) Leave the control drawer disconnected and restore power. The urn should fill in about ten minutes.

   f) Disconnect power.

   g) Close the valve until it is snug. There is no need to tighten.

   h) Reattach the control drawer to the urn. Restore power.

4) Turn the thermostat knob in front of housing to BREW position. Pilot light on top of thermostat bezel will illuminate. Water in urn will heat up, and thermometer pointer will rise to high end of BREW zone on thermometer dial. It will take approximately 45 minutes to heat water, depending on inlet water temperature, and urn heater wattage. Pilot light on top of thermostat bezel will go out when water in urn is at brew temperature.

5) Brew and discard at least one batch of water into each liner. Check that the level is correct. See the adjustments section if changes are needed.

How to Brew in an Automatic Urn

1) Place filter paper in brew basket with designated amount of coffee grounds. Coffee experts recommend from 6.4 to 8 ounces of coffee per gallon of water. Make certain you have a level bed of coffee. Consult your coffee supplier for exact brewing specifications. Filter paper sizes are:

Liner size	Filter size	American Part #
1.5 gallon	13 x 5	BB1.5WP
3 gallon	18 x 6	BB3WP
6 gallon	21 x 9	BB6WP
10 gallon	25 x 11	BB810WP

2) Replace cover. Lift and rotate the spray arm to position the nozzle in the hole on the basket cover.

3) Set the batch size toggle for a full or half batch. Press the start button on timer.

4) The brew cycle takes from 2 to 15 minutes depending on the size of the urn. When the brew is finished, allow one to two minutes for the coffee to drip from the basket.

5) When the drip period is complete, center the spray arm and remove the basket to throw away the grounds. Replace the liner cover to keep the coffee hot.

6) Coffee is ready to serve.

7) Hold brewed coffee at 185 to 190 degrees F by turning to the HOLD setting on thermostat knob.

Urn Adjustments

Brew Volume: Sprayover Time and Rate

Timer and sprayover rate are factory set. If other volumes of water or a faster or slower sprayover rate is desired, see following instructions:

Urn should be up to temperature before making adjustments of the brew system.

Timer Adjustment

The brew timer's full batch may be adjusted. The adjustment screw is located behind the plug under the start and stop buttons. See the figure at right. Since the sprayover rate is constant, the length of brew time sets the brew volume. The half batch is exactly 1/2 of the full batch.

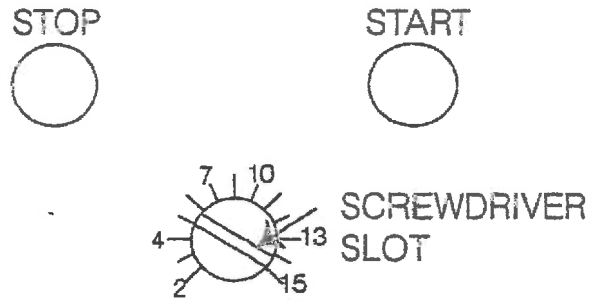

Urn Adjustments (con't.)

Sprayover Rate Adjustment

Pump Urns: models starting in 72, 73, 77, 82, 83, 87, 93, CH, or suffix (P).

A fixed orifice is located in top of spray arm swivel post. The only way to adjust the rate of flow from the spray arm is to drill a larger hole for more sprayover water or replace the existing orifice with a smaller hole size for less sprayover water.

Heat Exchange Urns: models beginning in 74, 80, 81, 84, 91, 99, without suffix (P).

Heat exchange urns have a regulator which adjusts the sprayover rate. The adjustment screw is located under urn in the back of the control drawer on the left side, or inside the control box on the Midline Urns. Loosen, CCW, the screw to decrease flow and tighten, CW, the screw to increase the flow. The spray pattern should touch the weld line near the top of the liner.

To set the sprayover rate, follow these steps:

1) Divide the desired brew size by the desired brew time. This is your sprayover rate in gallons per minute.

2) Operate the brew timer for one minute and measure the amount of water. If the volume is higher than your sprayover rate from step 1, decrease the flow. Increase the flow if the volume is too low.

3) Continue the adjustment until the desired rate is achieved.

Bypass Adjustment (Refer to Figure A)

The bypass adjustment controls the amount of water which bypasses the coffee during the brew. This water dilutes the final brew. If bypass is desired, open red handle on bypass valve. This opening will bypass up to about 40% of total sprayover water. Each complete turn is approximately equal to 5% bypass.

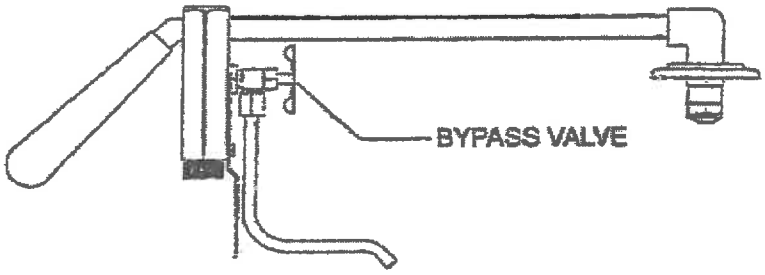

FIGURE A

Thermostat Adjustment

The thermostat is factory set so that the maximum temperature is about 204 degrees F in heat exchange urns and 195 degrees F in pump urns. This is the high end of brew range on the thermometer and corresponds to the BREW position on the thermostat. The HOLD position is the low end of the brew range on the thermometer, or 185 degrees F.

Water should never boil in the urn. If you need to adjust the maximum setting of the thermostat, do the following:

1) Remove the thermostat knob.

2) Insert small screwdriver into the center of the shaft. Turn the screw slightly clockwise to decrease the temperature.

3) Check the setting by adding cold water to make sure the temperature reaches the high end of the BREW range.

Care and Cleaning of Coffee Urns

WARNING: THE URN SURFACES AND WATER INSIDE ARE VERY HOT. USE CAUTION WHEN CLEANING THIS URN.

NEVER USE CHLORINE BASED CLEANERS SUCH AS BLEACH TO CLEAN STAINLESS STEEL. DO NOT USE SCOURING CLEANERS ON THE URN'S SURFACES.

After Each Brew

1) Discard grounds and rinse brew basket.

Every Day

1) Clean liners by rinsing and scrubbing with large, plastic bristle brush.

2) Wipe outside surfaces of the urn with a damp cloth.

3) Clean the brew basket. Remove wire basket insert if needed.

4) Wipe clean the liner covers.

5) Fill the liners with about one gallon of water to prevent coffee oil burn-in.

Weekly or Bi-Weekly Depending on Use

1) Fill the urn liners with about one gallon of hot water. Leave the thermostat on BREW.

2) Pour into the liner the recommended concentration of urn cleaner. Excessive amounts of cleaner will attack the stainless steel.

   Urn cleaners which have been used successfully:
   DIP-IT manufactured by Economics Laboratories, Inc.
   4 Corporate Park Drive, White Plains, NY 10604

   OXYLITE manufactured by Avril, Inc., Syndet Division
   601 N. Third Street, Reading, PA 19601

3) Scrub the liner interior with a large plastic bristle brush. Drain the liner.

4) Clean the gauge glasses with a long narrow brush. Rinse.

5) With the liners empty, remove the coffee faucets by unscrewing the large plastic wing-nuts which fasten the faucets. Scrub from the opening into the center of the urn with a long brush.

   WARNING: THE HOT WATER FAUCET SHOULD NOT BE REMOVED FOR CLEANING. HOT WATER WILL EMPTY FROM JACKET, CAUSING BURNS. TO CLEAN WATER GAUGE, CLOSE SHUT-OFF VALVE AT BASE OF GAUGE ASSEMBLY.

6) Unscrew the top of the faucet from its body. Scrub faucet body. Clean the silicone seat cup with a soft cloth and soapy water.

7) Reassemble faucets. Fill the liners with hot water and drain until the liner and all parts are completely rinsed.

Liquid Level Control System

Dual Level Control: What it Does (Refer to Figure B):

A) AUTO REFILL of the water compartment to keep the tank filled with water. When the water is used, the fill valve opens automatically to let in more water. The fill valve closes when the water level reaches full.

B) LOW WATER CUTOFF to prevent burnout of the electric immersion heater when there is not enough water to cover it. When low water occurs, the heat automatically switches off. The heat stays off until more water is added.

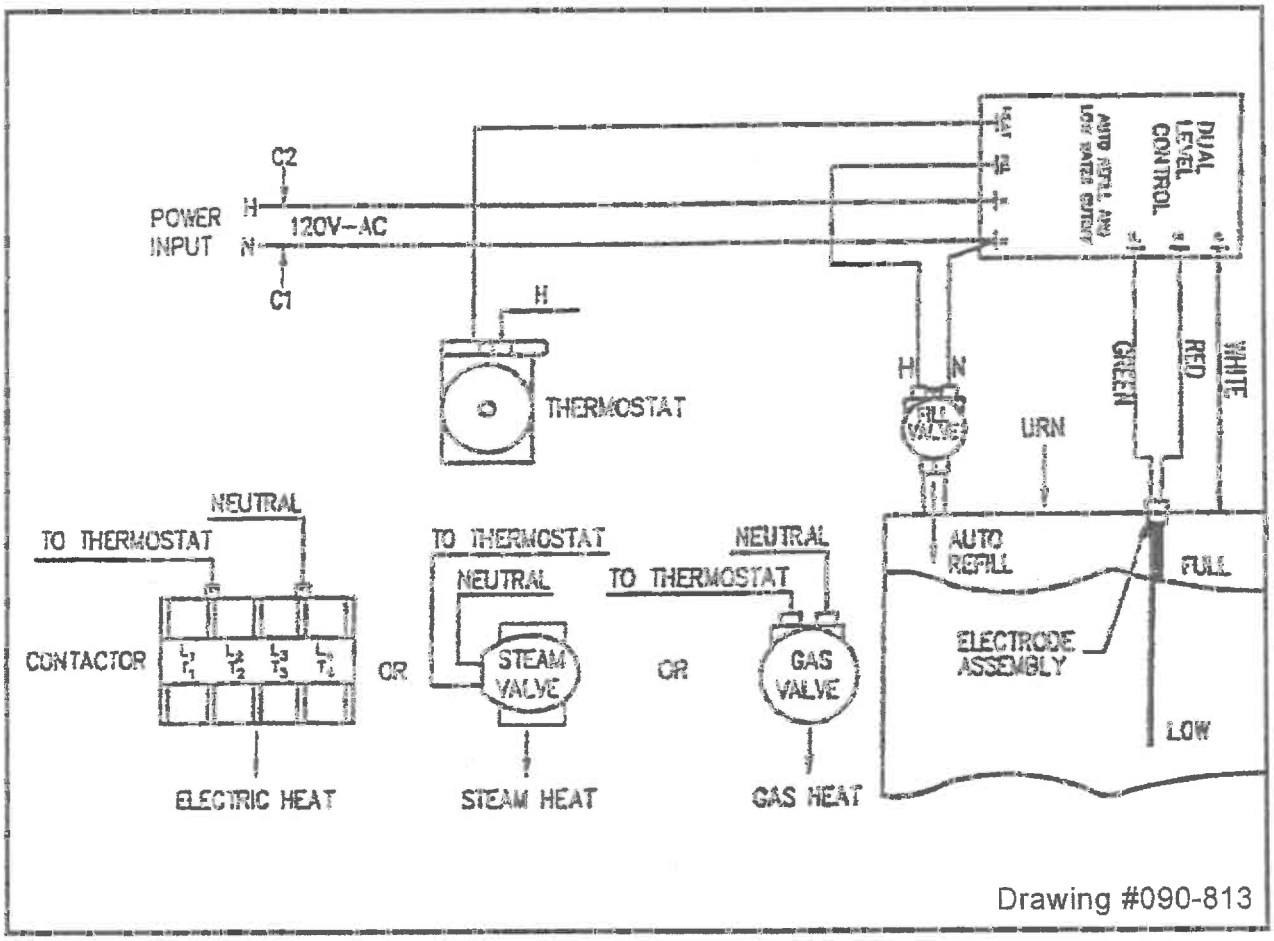

Figure B

Quick Service Check of Liquid Level Control System:

1) All wires secure and properly connected.
2) Clean the electrodes. Lime (mineral scale) build-up can interfere with operation of any liquid control system.

Service (cont.)

To replace a heater (drain the urn first):

1) Remove the control drawer as described above. (Refer to page 9)
2) Locate the heater terminals under the urn, or on the side for Midline equipment.
3) Remove the heater liner which is closest to the terminals.
4) Loosen the heater connection and remove heater.
5) Place the copper sealing washer on the new heater with the split toward the element.
6) Position the new heater in the urn and tighten the nut.
7) Be sure the electrical connections are tight. Close the gap terminal with pliers if it is too loose. Replace the wires if they are damaged.

To replace the thermostat (drain the urn first):

1) Remove the control drawer as described above. (Refer to page 9)
2) Locate the fitting on the bottom surface of the urn which the thermostat capillary passes through.
3) Remove the coffee liner closest to this fitting.
4) Locate the thermostat bulb and remember its location. Some urns have two thermostats. Be sure to find the right one.
5) Unwrap the wire holding the bulb.
6) Unscrew the thermostat from the fitting on the bottom of the urn.
7) Disconnect the wires and remove the thermostat.
8) Attach the new thermostat and tighten the capillary tube fitting.
9) Use the wire to attach the bulb to the same location in the urn as the old thermostat.
10) Reattach the liner, as described above, close up the urn, allow the urn to heat to check the temperature setting.
11) On Midline or Chinese Tea Urns, the thermostat is mounted on the control box on the side of the urn.

To convert between single and three phase (on urns with three heaters only, 208-240V only):

Refer to the heater wiring diagram #091-227 at the end of the manual.
Use extra caution in ensuring that all wires are correctly and securely connected.

To replace a sprayover pump on pump urns:

1) Disconnect power from urn.
2) Remove the cover over the controls.
3) Locate the hose clamp in the control panel.
4) Clamp off intake hose to pump from water jacket.
5) Disconnect wires from pump to timer (label wires).
6) Disconnect ground wires.
7) Slip hoses off of pump.
8) Loosen screws which hold pump in place and remove pump.
9) Retain fitting and bracket for use with replacement.
10) Replace pump, connect wiring and tubing, and pump should be level.
11) Restore power to the urn.

Troubleshooting: Filling, Heating, and Brewing

Problems	Possible Cause	Service Check	Remedy
		Filling Problems	
Over filling water tank even when the power is off.	• Fill valve not sealing properly.	• Water entering tank continuously, usually slow.	• Disassemble valve and clean out dirt. Valve may need new plunger if seal is worn.
	• Fill valve installed backwards.	• Look for direction of arrow on valve body.	• If arrow on valve is pointing toward water inlet, remove valve and install correctly.
Over filling water tank only when power is on.	• High electrode coated in lime or faulty.	• Jumper HI terminal on level control to metal enclosure stops fill.	• Remove electrode assembly and clean both probes. If this does not work, replace assembly.
	• Missing or faulty connection of C terminal on level control to metal enclosure.	• Jumper from C terminal to metal body stops fill.	• Make secure connection of C to metal body.
	• Fill valve connected to heat terminal on leve control.	• Check connections.	• Connect black lead for valve to FILL on level control.
	• Liquid Level Control is faulty.	• Jumper from HI to C or metal enclosure does not stop fill.	• Replace level control.
Tank does not refill.	• No power at equipment.	• Nothing operates.	• Check main switch or circuit breaker, urn's circuit breaker or power switch if provided.
	• No water at equipment.	• Crack water inlet fitting.	• Make sure all water supply line valves are open.
	• Water strainer clogged.	• Water pressure before strainer but not after.	• Remove and clean or replace strainer's mesh.
	• No power to level control.	• Check for 120V AC across H and N terminals on level control.	• If no voltage, check for loose or broken wires.
	• Level control faulty.	• Disconnect probe wire to HI terminal on level control. Check for 120V at FILL terminal.	• If no 120V at FILL terminal, replace level control.
	• Electrodes faulty.	• Tank fills only when probe wire is disconnected from HI terminal on level control.	• Replace electrodes. If no remedy, check for improper wiring or level probe tip touching metal.
	• Fill valve faulty.	• 120V is across FILL and N on level control, but no fill.	• Disassemble valve and clean or replace plunger if frozen. If plunger is OK, coil may need replacement.

Troubleshooting: Filling, Heating, and Brewing (con't.)

Problems	Possible Cause	Service Check	Remedy
		Heating Problems	
Tank does not heat.	• Low electrode faulty or covered with lime.	• Jumper from XL terminal on level control to metal body allows heating.	• Clean electrode, check wiring. If no remedy, replace electrodes.
	• Level control faulty.	• Check for 120V between H and N terminals on level control. If OK, jumper between XL and metal body and check for 120V between HEAT and N terminals	• If 120V is not at HEAT, replace level control.
	• Thermostat faulty or out of cailbration.	• Make sure thermostat is turned on. Jumper across thermostat allows heating.	• Recalibrate thermostat. If no remedy or thermostat does not cycle, replace thermostat.
	• Heater contactor coil faulty. (electric heat)	• Check for 120V across contactor coil.	• If correct voltage, but contactor not closing, replace contactor.
	• Heater contactor contacts faulty.	• Check for heater voltage between each heater pole on contactor and a different terminal pole.	• If no continuilty across contactor when it is closed, replace contactor.
	• Heater faulty.	• Check resistance across elements with wires disconnected.	• If resistance is much different than 10 to 15 ohms, replace heater.
Recovery time is very long.	• Heater faulty.	• See above.	• See above.

Troubleshooting: Filling, Heating, and Brewing (con't.)

Problems	Possible Cause	Service Check	Remedy
Brewing Problems			
Brew volume too large or small.	• Timer out of adjustment.	• Compare timer setting to factory setting chart.	• Adjust timer.
	• Flow rate is incorrect.	• Brew batch for one minute and measure volume. Compare to factory setting chart.	• Adjust flow rate. If flow rate cannot be adjusted, check for lime in spray arm, or spray arm post. Water regulator on heat exchange urns may be faulty or need adjustment.
	• Presssure not adequate at urn.	• Water line must be 3/8" ID and pressure at least 30 PSI.	• Increase water line size. Plumb line so other equipment does not interfere with pressure.
	• Lime build-up in heat exchange coil. (heat exchange models only)	• Brew rate regulator opened completely, pressure OK at urn, but flow is still slow.	• De-lime heat exchange coil.
	• Timer faulty.	• Brew time does match timer setting. Timer not adjustable.	• Replace timer.
Brew volume erratic. (There are always some small variations from batch to batch).	• Pump cavitation (pump models only)	• Water temperature above 195 defrees F.	• Recalibrate thermostat to about 195 degrees F.
	• Timer faulty.	• Measure brew time for inconsistencies.	• If time is different from batch to batch, replace timer.
	• Pressure flucuations at urn.	• Check pressure at urn inlet.	• Plumb water line so its pressure is not influenced by other appliances.
			• On Heat Exchange Urns, adjust, repair, or replace regulators.

Troubleshooting: Filling, Heating, and Brewing (con't.)

Problems	Possible Cause	Service Check	Remedy
		Brewing Problems (con't.)	
Brew will not start.	• Timer faulty.	• Check for 120V between H and N on timer. If OK, check for 120V between BREW and N on timer after pressing start.	• If no 120V BREW output from timer, replace timer.
	• Pump faulty (pump urns only)	• 120V between BREW and N on timer, but pump does not operate.	• Check for lime in pump impeller. Clean or replace impeller. If no remedy, replace pump.
	• Spray arm clogged with lime.	• Cannct blow through spray arm.	• Clean lime out of spray nozzle.
	• Coil on Heat Exchange Urns clogged.	• Brew valve opens but no water enters coil.	• Delime or replace coil.
Agitation does not automatically start after brew.	• Timer faulty.	• Pressing manual agitation button starts air pump.	• Replace timer.
	• Air pump faulty.	• Pressing manual agitation button does not start air pump. Also check for 120V between AGITATE terminals on timer.	• Replace air pump.
Agitation pump starts, but does not stir coffee.	• Silicone tube at top of gauge glass broken.	• Visual.	• Replace tubing.

If you still need help, call our Service Department at (800) 695-4500 (USA or Canada) (Monday through Friday, 8 am - 6 pm EST), +1-502-425-4776 or an authorized service center in your area. Please have the model and serial numbers ready so that accurate information may be given.

Prior authorization must be obtained from Grindmaster Corporation's Technical Services Department for all warranty claims.

Parts Illustration for High Volume Urns (Model 87710)

	DESCRIPTION		PART NO.
1.	Dual Air Pump		508004
2.	Electrode Assembly		712-017
3.	Timer		530-007
4.	Thermostat		504001
5.	Cover		800007
6.	Air Agitation Tubing		512011
7.	Vent Tube		A581B
8.	Spray Arm Assemby		1214028
9.	Cover Handle		513001
10.	Brew Basket		BB810
11.	Gauge Glass Assembly	Coffee	718-036
		Water	718-046
12.	Faucet		522094
13.	ADI Foot		510012
14.	Shank w/Wing Coupling Nut	Coffee	1211016
		Water	1211015
15.	Electric Immersion Water Heater		535-040
16.	Thermometer		506001
17.	Circuit Breaker		515072
18.	Manual Agitation Switch		515001
19.	Fill Solenoid Valve		537-060
20.	Sprayover Pump		533-012
21.	Water Pressure Regulator		505019
22.	Heater Contactor		514005
23.	Liquid Level Control - Dual		549-006
24.	Power Input Terminal Block		531-035
25.	Solid State Relay - Automatic Air Agitation		531-024
26.	Water Strainer		532064
27.	Start Push Button		515001
28.	Stop Push Button		515002
29.	Refill Water Inlet Standpipe		418-005
30.	Boiler Drain Valve		532097
31.	Pump Silicone		512012
32.	Ball Valve for Sprayover		537-064
33.	Plug for Ball Valve (Sprayover)		548-090

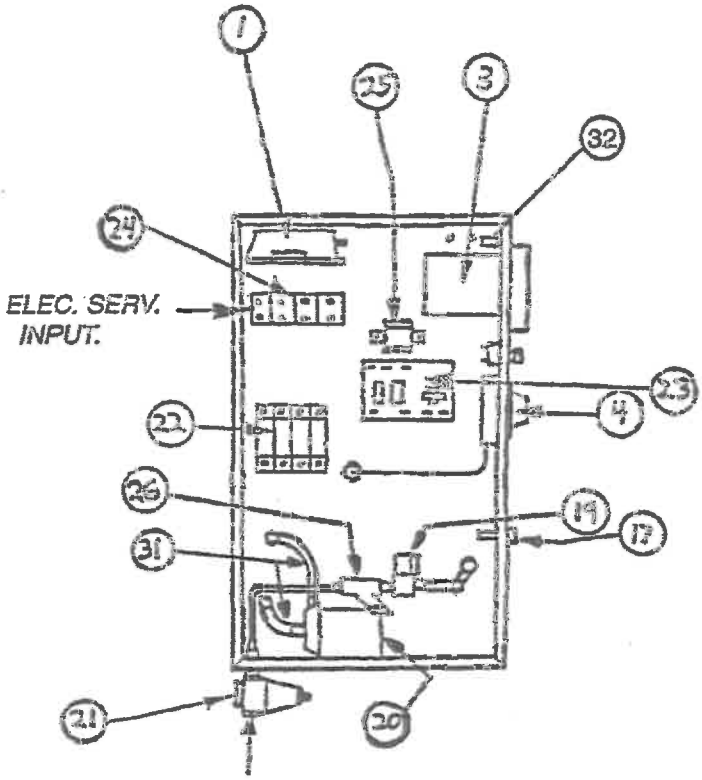

LEFT CONTROL BOX
- END VIEW -

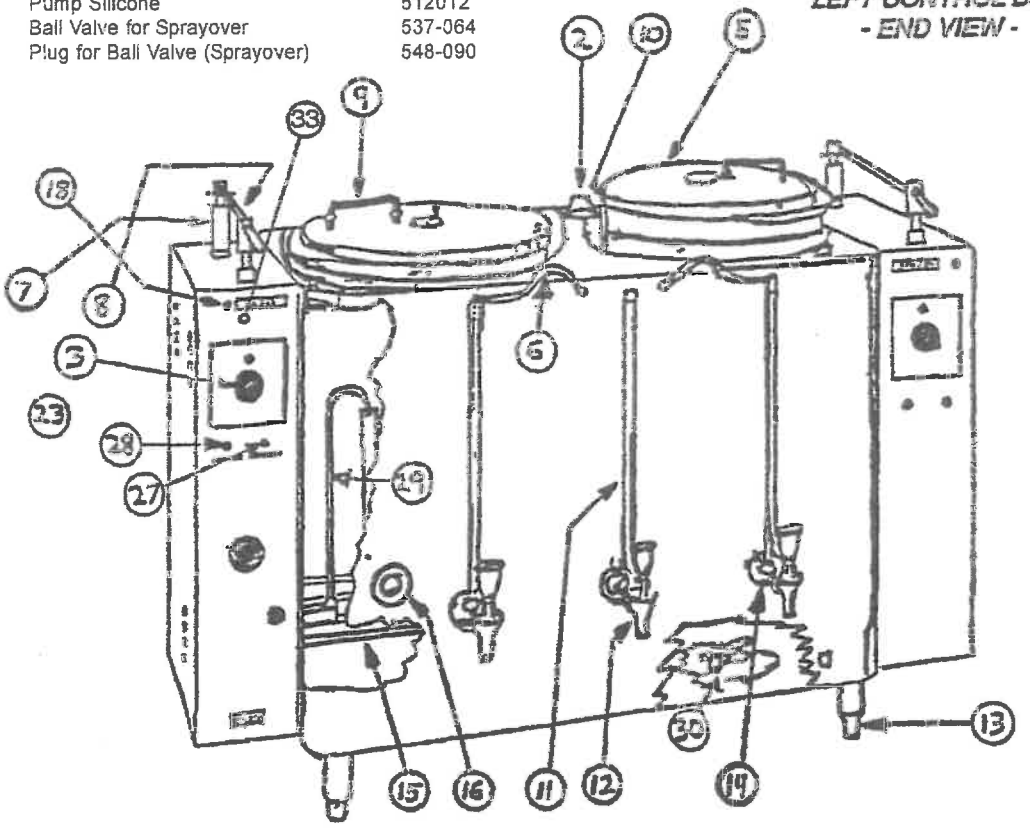

Parts Illustration for 7700 Urns

ITEM NO.	DESCRIPTION	URN SIZE	PART NO.
1	Cover Handle Kit	All	513001
2	Cover	Specify Model #	8000XX
3	Liner Nut	All	1200002
4	Liner Washer	All	520001
5	Coffee Liner	Specify Model #	10190XX
6	Spray Arm Ass'y	Sepcify Model #	12140XX
7	Air Agitation Tubing	All	512011
8	Plug in Cleanout Cap for Air Mix	All	A-689
9	Gauge Assy	Specify Model #	718-OXX
10	Coffee Delivery Tube	Specify Size and Single or Double Service Dualwall	12100XX
11	Upper Faucet Ass'y	All	537-048
12	Faucet	All	522094
13	Agitation Switch	All	515001
14	Thermometer	All	506001
15	Heater	Specify Model Ser.	535-OXX
16	Thermostat	All	504001
17	Bullet Foot	All	510012
18	Electrode Assy	Specify Model #	712-OXX
19	Brew Basket	Specify Model #	BBXX
20	Full/Half Batch Selector Switch	All	531-012
21	Start/Stop Switches (Part of Brew Timer)	All	530-007
22	Brew Pilot Light	All	515016
23	Dual Air Pump	All	508004
24	Terminal Block	All	505003
25	Timer	All	530-007
26	Dual Uquid Level Control	All	549-000
27	Heat Contactor	Specify Model #	5140XX
28	Water Strainer	All	532064
29	Control Box Door	Specify Model #	313-XXX
30	Sprayover Pump	All	533-012
31	Fill Solenoid Valve	All	537-060
32	Pump Silicone Tubing	All	512012
33	Circuit Breaker	All	515072

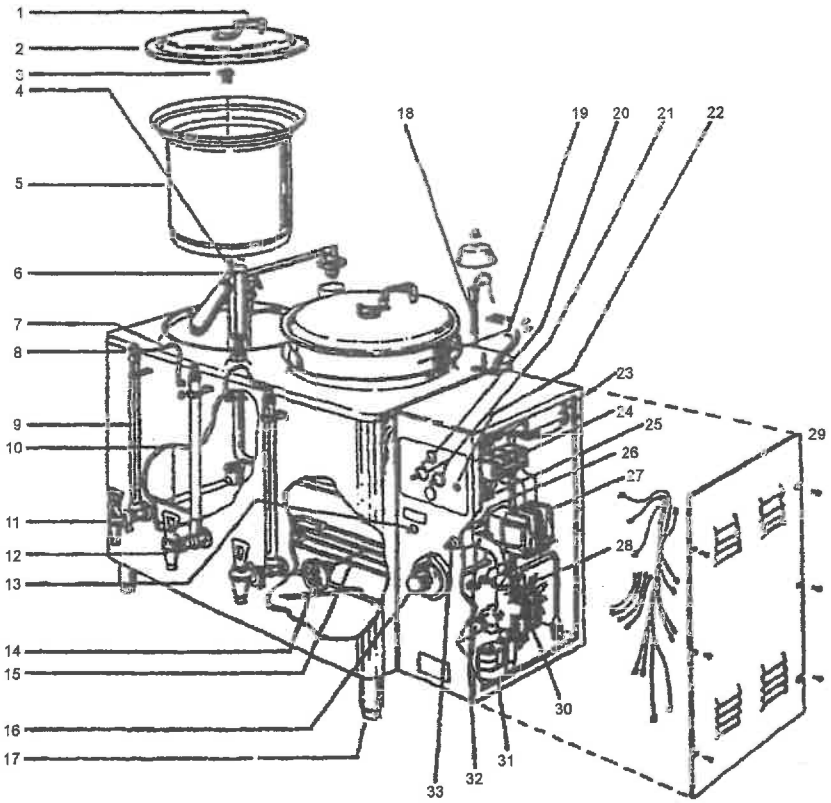

Parts Illustration for 7400 Urns

ITEM NO.	DESCRIPTION	URN SIZE	PART NO.
1	Cover Handle Kit	All	513001
2	Urn Cover Complete	Specify Model #	8000XX
3	Liner Nut	All	1200002
4	Liner Washer	All	520001
5	Coffee Liner	Specify Model #	10190XX
6	Spray Arm Ass'y	Specify Model #	12140XX
7	Silicone Tubing For Air Mix	All	512011
8	Plug in Gauge Cap For Air	All	A-689
9	Gauge Shield Ass'y	Specify Model #	718-OXX
10	Upper Faucet Ass'y	All	537-048
11	Faucet	All	522094
11A	Shank Ass'y for Faucet	Specify Coffee or Water	12110XX
12	Manual Agitation Switch	All	515001
13	Heater & Serial #	Specify Model #	535-0XX
14	Thermometer	All	506001
15	Heat Exchange Coil	Specify Model #	2030XX
16	Thermostat	All	504001
17	Bullet Foot	All	510012
18	Electrode Ass'y	Specify Model #	712-0XX
19	Brew Basket	Specify Model #	BBXX
20	Refill Water Inlet	All	718-XXX
21	Stop Switch	All	515002
22	Full/Half Batch Selector Switch	All	521-012
23	Start Switch	All	515001
24	Amber Brew Pilot Light	All	515016
25	Dual Air Pump	All	508004
26	Terminal Block	All	505003
27	Timer	All	530-007
28	Liquid Level Control	All	505002
29	Heat Contactor	Specify Model #	5140XX
30	Control Panel Door	Specify Model #	313-XXX
31	Outside 3/8" Water Regulator	All	505019
32	Brew Solenoid Valve	All	537-060
33	Inside 1/4" Water Regulator	All	505021
34	Water Strainer	All	532064
35	Fill Solenoid Valve	All	537-060
36	Circuit Breaker	All	515072
37	Coffee Delivery Tube	Specify Size & Single or Dbl. Service Dual Wall	12100XX

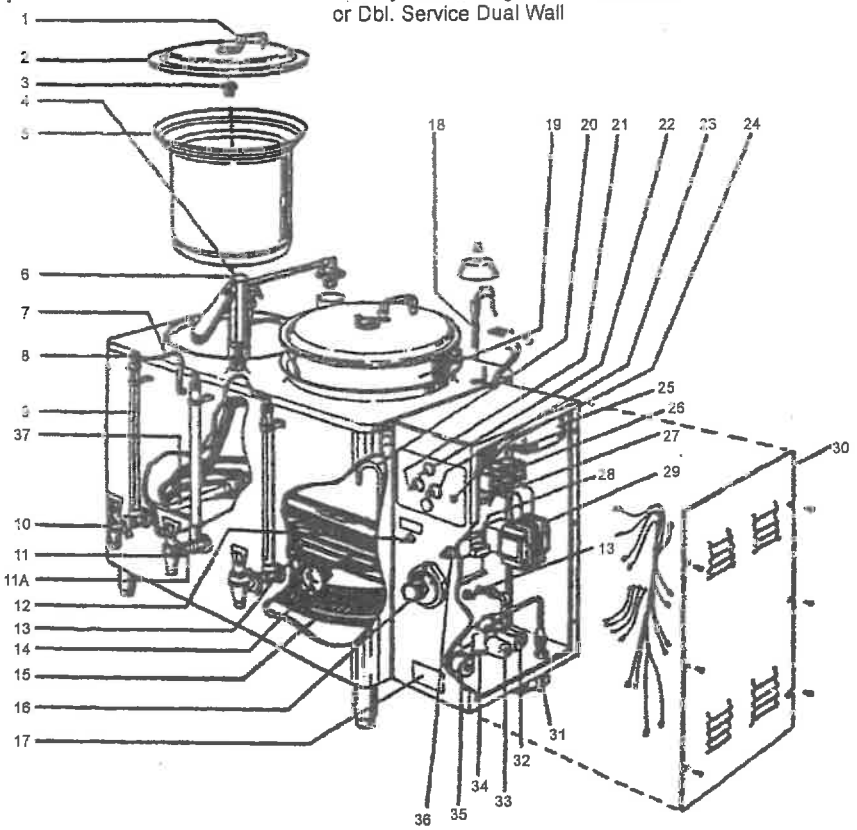

Parts Illustration for 8000 Urns

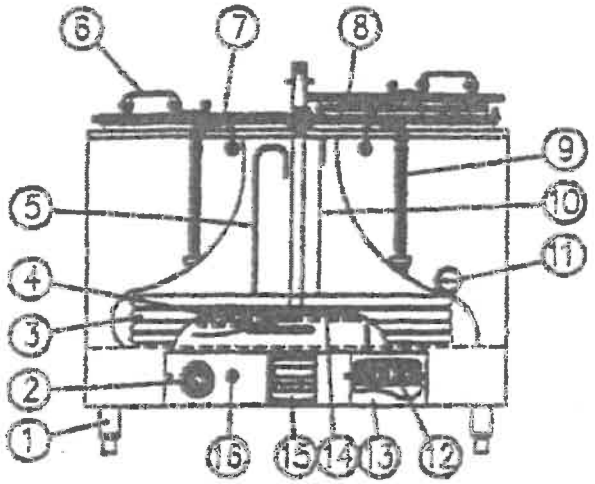

FRONT VIEW

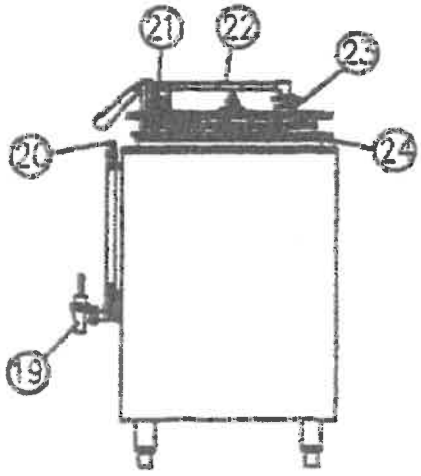

SIDE VIEW

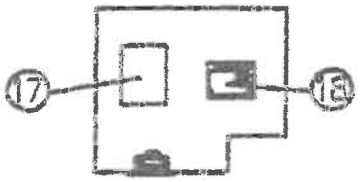

CONTROL PANEL TOP VIEW

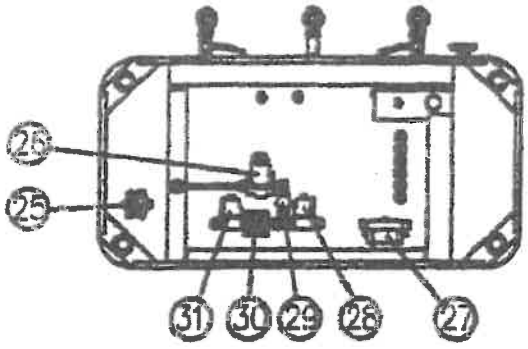

BOTTOM VIEW

	DESCRIPTION		PART NO.
1.	Adjustable Leg		510012
2.	Thermostat W/Pilot Light		504001
3.	Heat Exchange Coil		203XXX
4.	Thermostat Capillary Bulb	Part of	504001
5.	Refill Water Inlet Standpipe		418-XXX
6.	Cover Handle		513001
7.	Air Agitation Tubing		512011
8.	Coffee Liner Cover		800XXX
9.	Gauge Glass Assembly		718-XXX
10.	Electrode Assembly		712-XXX
11.	Thermometer		506001
12.	Terminal Block		531-035
13.	Terminal Block Cover		A1037
14.	Electric Immersion Heating Element (s) (Electric heat only)		535-XXX
15.	Solid State Timer		530-007
16.	Control Section Circuit Breaker		515072
17.	Dual Output Air Pump		508004
18.	Liquid Level Control		549-006
19.	Faucet		522094
20.	Top Gauge Cleanout Fitting for Air Agitation		A-689
21.	Bypass Valve		1214034
22.	Spray Arm Assembly		1214XXX
23.	Vent Tube		A581B
24.	Brew Basket		BBX
25.	Drain		532097
26.	Primary Water Inlet Regulator		505019
27.	Heater Contactor (Electric heat only)		514005
28.	Water Inlet Fill Solenoid Valve		537-060
29.	Inlet Water Strainer		532064
30.	Secondary Sprayover Water Regulator		505021
31.	Sprayover Solenoid Valve		537-060

Rough In Specifications for High Speed Brew Urns (Model 87710E)

UTILITY DATA

1. Must be connected to hot (140 degrees F) water supply, 3/8" NPT, 2.5 GPM flow rate min.

2. Steam Heat
   - A. Standard pressure =10-25 PSIG
   - B. Max. steam demand = 70 lbs. per hour
   - C. Boiler horse power = 2.3
   - D. Requires connection to 120V AC, 3 wire, 15 amp circuit; 6 foot cord with plug supplied

3. Electric Heat

A. Specify service

120/208V,1 PH, 3 Wire	*208V,1 PH, 2 Wire
120/208V, 3 PH, 4 Wire	*208V, 3 PH, 3 Wire
120/240V, 1 PH, 3 Wire	*240V,1 PH, 2 Wire
*240V, 3 PH, 3 Wire	*Requires separate connection to 120V AC 15 amp circuit; 6 foot cord with plug supplied.
*480V, 3 PH, 3 Wire	

B. Load - 15 KW for all services

Volts	208	240	480
1 PH, Amps	72	63	-
3 PH, Amps	42	36	18

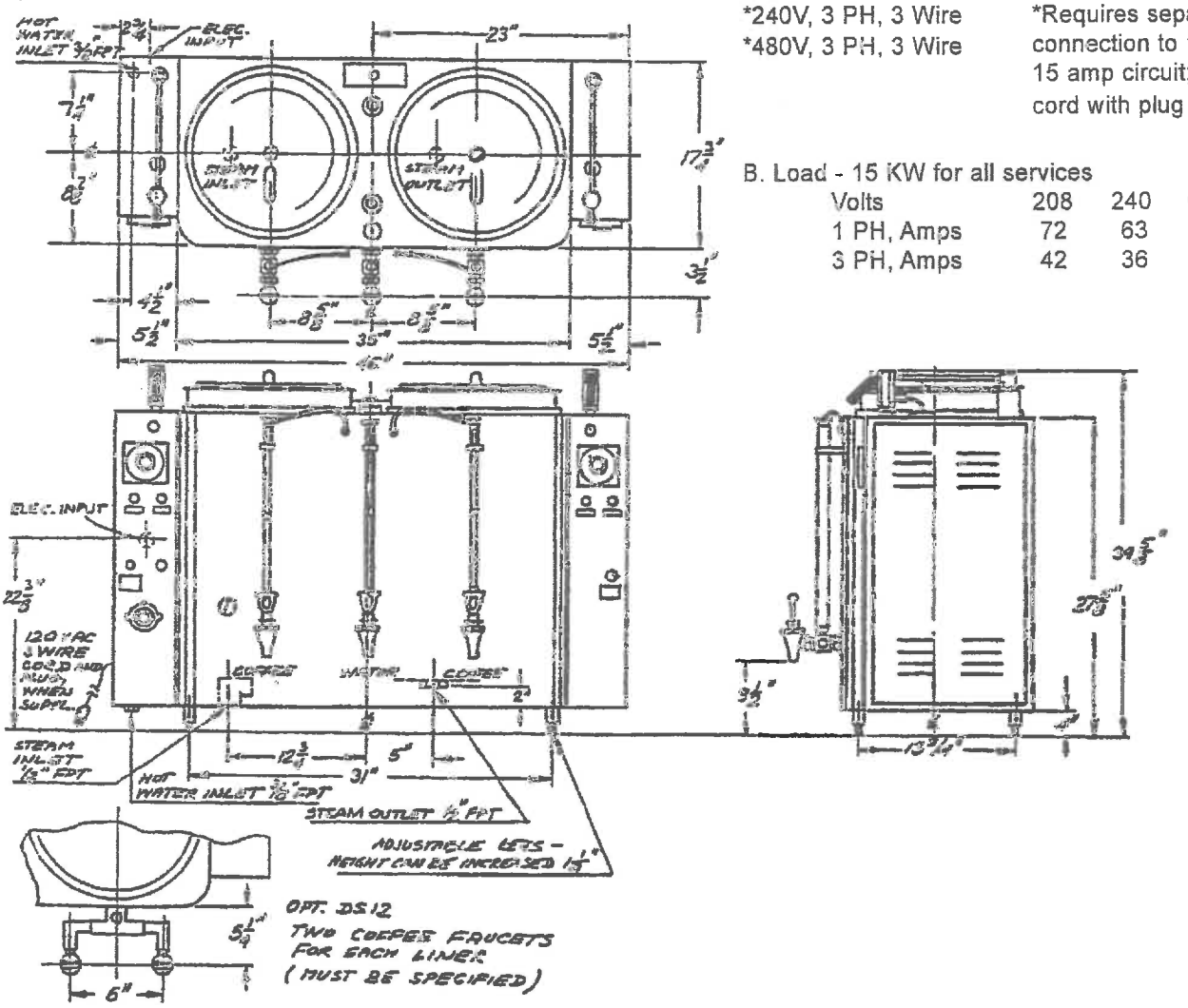

Drawing #090-999

Rough In Specifications for Single Auto Urns (7700, 7400, or Chinese Tea Urns)

MODEL	A	B	C	D	E	F	G	H	J	K	L	M	N	P	Q
8413 E,S	19	24 1/2	8	16	19 1/2	5 1/2	5 1/2	27 1/8	21 5/8	15	8 5/8	12	18	1 5/8	8 1/2
8416 E,S	22	27 1/2	8 7/8	17 3/4	21 1/4	7 5/8	5 1/2	33 1/8	27 5/8	18	9 1/2	13 3/4	22 3/8	1 5/8	8 1/2
84110 E,S	22	27 1/2	8 7/8	17 3/4	21 1/4	7 5/8	5 1/2	34 5/8	27 5/8	18	9 1/2	13 3/4	22 3/8	1 5/8	8 1/2
9413 E,S	18	23 1/2	7 1/2	15	18 1/2	5 1/2	5	27 1/8	21 5/8	15	8 5/8	12	18	1 1/4	8
9416 E,S	21	26 1/2	8 3/8	16 3/4	20 1/4	7 5/8	5	33 1/8	27 5/8	18	9 1/2	13 3/4	22 3/8	1 1/4	8
94110 E,S	21	26 1/2	8 3/8	16 3/4	20 1/4	7 5/8	5	34 5/8	27 5/8	18	9 1/2	13 3/4	22 3/8	1 1/4	8
7413 E,S	18	23 1/2	7 1/2	15	18 1/2	5 1/2	5	27 1/8	21 5/8	15	8 5/8	12	18	1 1/4	8
7416 E,S	21	26 1/2	8	16 3/4	20 1/4	7 5/8	5	33 1/8	27 5/8	18	9 1/2	13 3/4	22 3/8	1 1/4	8
74110 E,S	21	26 1/2	8 3/8	16 3/4	20 1/4	7 5/8	5	34 5/8	27 5/8	13	9 1/2	13 3/4	22 3/8	1 1/4	8
7700 E,S	*Same as 7400 Model Series*														

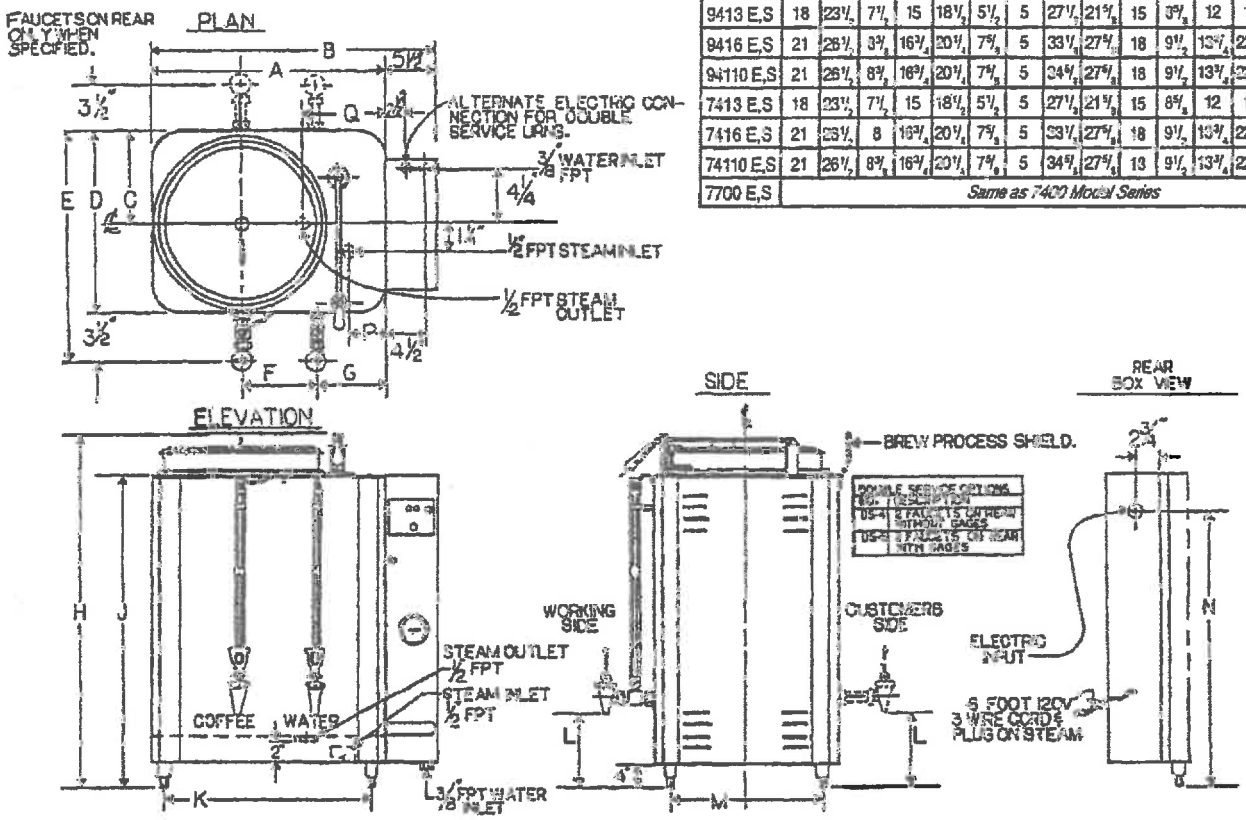

IF 120V SERVICE NOT AVAILABLE SPECIFY OPT. 22 CONTROL CIRCUIT TRANSFORMER

MODEL	Brew Liner Volume	Brew Basket Used	Paper Filter Size	Bag Ring Size	Liner Bag Size
8413ES 9413ES 7413E	3 GAL.	BB3	18 x 6	12 1/2	14 x 9
8416ES 9416ES 7416E	6 GAL.	BB6	21 x 9	14	17 x 9
84110ES 94110ES	10 GAL.	BB10	25 x 11	15	17 x 9

STEAM HEAT

Model No. Suffix (S)

- Specify steam pressure.
- Standard is 10 to 25 PSIG, other pressures extra cost.
- 6 ft. - 120V/3 wire cord and plug supplied for controls (1 amp).

Maximum steam demand, lbs. per hr.	8413 7413	8416.20 9416.10
	30	70

ELECTRIC HEAT *Model No. Suffix (E)* Specify service.	MODEL	8413 2413		8416 9416		84110 94110		7413		7416	
	LOAD	KW	AMP	KW	AMP	KW	AMP	KW	AMP	KW	AMP
120/208V - 1PH - 3 WIRE		6	39	11.5	54	15	72	5.5	25	8.5	41
120/240V - 1PH - 3 WIRE		10.5	44	12	50	15	63	7	29	11.5	48
120/208V - 3PH - 4 WIRE		8	22	11.5	31	15	42	8	22	11.5	31
240V - 3PH - 3 WIRE		10.5	25	12	29	15	36	10.5	25	12	29
480V - 3PH - 3 WIRE		12	14	12	14	15	18	12	14	12	14

Drawing #A-1184

Rough In Specifications for Twin Auto Urns (7700, 7400, or Chinese Tea Urns)

MODEL	A	B	C	D	E	F	G	H	J	K	L	M
8443 E,S	31½	37	16¼	11⅝	11⅝	7¾	27⅛	18			8⅝	21⅝
8446 E,S	35	40½	17¾	12¾	12¾	8¾	33⅛	22¾			9½	27⅝
84410 E,S	35	40½	17¾	12¾	12¾	8⅝	34⅛	22⅝			9½	27⅝
9993 E,S	30½	36	15¼	11¼	11¼	7¾	27⅛	18			8⅝	21⅝
9996 E,S	34	39½	16¾	11⅞	11⅞	8⅝	33⅛	22¾			9½	27⅝
99910 E,S	34	39½	16¾	11⅞	11⅞	8⅝	34⅛	22⅝			9½	27⅝
7443 E,S	30½	36	15¼	11¼	11⅛	7¾	27⅛	18			8⅝	21⅝
7444 E,S	30½	36	15¼	11¼	11¼	7¾	29⅝	18			8⅝	24⅛
7446 E,S	34	39½	16¾	11⅞	11⅞	8⅝	33⅛	22¾			9½	27⅝
74410 E,S	34	39½	16¾	11⅞	11⅞	8⅝	34⅛	22⅝			9½	27⅝
7443 G	30½	36	15¼	11¼	13¾	7¾	29⅝		18½	14	11	24⅛
7444 G	30½	36	15¼	11¼	13¾	7¾	32⅛		18½	14	11	26⅛
7446 G	34	39½	16¾	11⅞	14⅛	8⅝	35⅛		20½	15½	12	30⅛
74410 G	34	39½	16¾	11⅞	14⅛	8⅝	37⅛		20½	15½	12	33⅛
7700 E,S	*Same as 7400 Model Series*											

DOUBLE SERVICE OPTIONS	
NO.	DESCRIPTION
DS-1	3 FAUCETS ON REAR WITHOUT GAGES
DS-2	3 FAUCETS ON REAR WITH GAGES

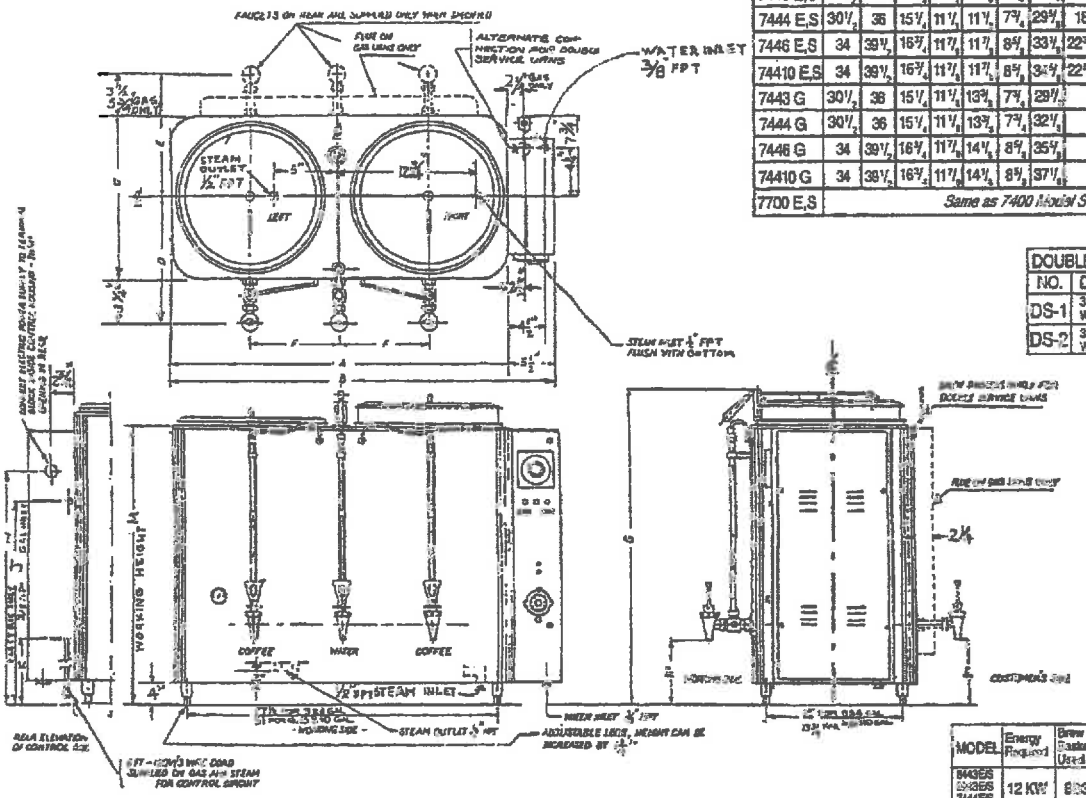

MODEL	Energy Required	Brew Basket Used	Paper Filter Size	Bag Ring Size	Liner Bag Size
8443ES 9993ES 7444ES	12 KW	BB3	18 x 6	12 1/2	14 x 9
8446ES 9996ES	15 KW	BB6	21 x 9	14	17 x 9
84410ES 99910ES 74410ES	15 KW	BB10	25 x 11	15	17 x 9
7443ES	3x240V 12KW	BB3	18 x 6	12 1/2	14 x 9
7446ES	2x240V 15KW	BB6	21 x 9	14	17 x 9
7443G	35,000 BTU/hour	BB3	18 x 6	12 1/2	14 x 9
7444G	35,000 BTU/hour	BB3	18 x 6	12 1/2	14 x 9
7446G	35,000 BTU/hour	BB6	21 x 9	14	17 x 9
74410G	35,000 BTU/hour	BB10	25 x 11	15	17 x 9

ALL HEIGHTS INCREASED BY OPT. 58 WHEN SPECIFIED

ELECTRIC HEAT - SPECIFY ELECTRIC SERVICE	STEAM HEAT - SPECIFY STEAM PRESSURE	GAS HEAT - SPECIFY TYPE OF GAS
120/208V-3 WIRE-SINGLE PHASE 120/208V-4 WIRE-THREE PHASE 120/240V-3 WIRE-SINGLE PHASE 240V-3 WIRE-THREE PHASE (EXTRA COST) 480V-3 WIRE-THREE PHASE (EXTRA COST)	OPERATING PRESSURE STANDARD IS 10 TO 25 PSIG. OTHER PRESSURES EXTRA COST. ALL REQUIRE 120V AC POWER FOR CONTROL CIRCUIT, 1 AMP.	NATURAL (SUPPLIED WITH REGULATOR - 3 1/2" W.C.) LP GAS (SUPPLIED WITH REGULATOR - 10" W.C.) ALL REQUIRE 120V AC POWER FOR CONTROL CIRCUIT, 1 AMP.

Drawing #A-890

Rough In Specifications for Twin 1.5 Gallon Automatic Brew Urn

Ⓐ ELECTRIC HEAT: SPECIFY ELECTRIC SERVICE

MODEL 7215E (SINGLE WALL): 4400W,120/240V,18AMP,1PH,3 WIRE OR
3300W,120/208V,16AMP,1PH,3 WIRE

MODEL 8215E (DUAL WALL): 6600W,120/240V,28AMP,1PH,3 WIRE OR
5000W,120/208V,24AMP,1PH,3 WIRE

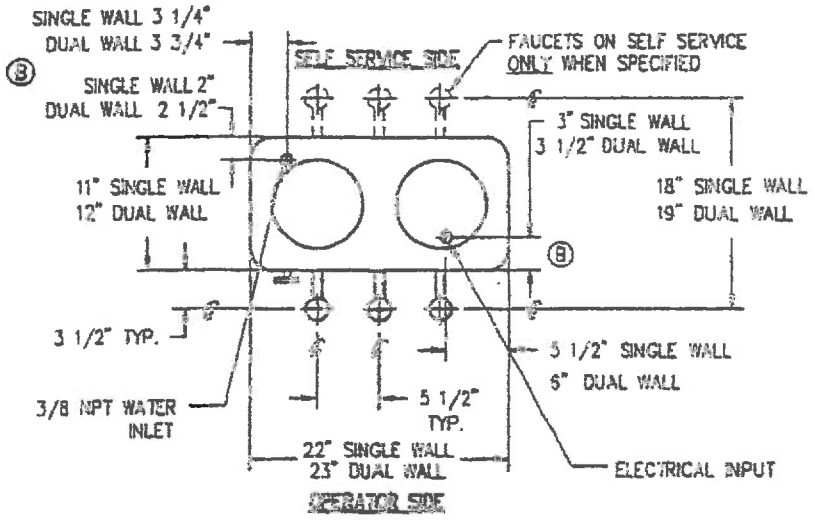

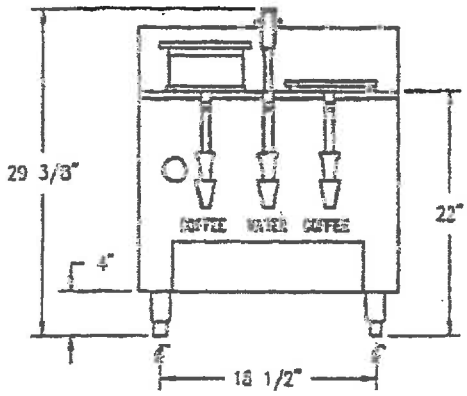

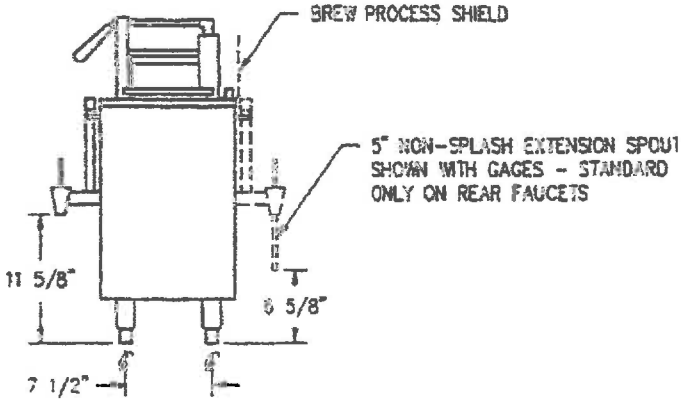

Drawing #090-749

Rough In Specifications for 8000 Single Space Saver Urn

MODEL	A	B	C	D	E	F	G	H	J	K	L	M	N	P	R	S	T
8113	19	9 1/2	16 1/4	3 1/8	5 1/2	11 5/8	23 1/4	6	8	15	12	23 1/2	29	13 1/8	5 1/2	6 1/2	8 1/2
8116	22	11	17 3/4	3 7/8	7 5/8	12 3/8	24 3/4	7 1/2	9 1/2	18	13 3/4	29 1/2	35	13 1/2	5 1/2	8	8 1/2
80110	22	11	17 3/4	8 7/8	7 5/8	12 3/8	24 3/4	7 1/2	9 1/2	18	13 3/4	31 1/2	38 1/2	13 1/2	5 1/2	8	8 1/2
9113	18	9	15 1/4	7 5/8	5 1/2	11 1/8	22 1/4	6	8	15	12	23 1/2	29	13 1/8	5	6 1/2	8 1/8
9116	21	10 1/2	16 3/4	3 3/8	7 5/8	11 7/8	23 3/4	7 1/2	9 1/2	18	13 3/4	29 1/2	35	13 1/2	5	8	8 1/2
90110	21	10 1/2	16 3/4	3 3/8	7 5/8	11 7/8	23 3/4	7 1/2	9 1/2	18	13 3/4	31 1/2	38 1/2	13 1/2	5	8	8 1/2

DOUBLE SERVICE OPTIONS	
NO.	DESCRIPTION
DS-4	2 FAUCETS ON SELF SERVICE, NO GAGES
DS-5	2 FAUCETS ON SELF SERVICE, WITH GAGES

STEAM HEAT MODEL NO. SUFFIX (S)
SPECIFY STEAM PRESSURE. STANDARD IS 10 TO 25 PSIG. OTHER PRESSURE EXTRA COST. 6'-120V/3 WIRE CORD PLUG SUPPLIED FOR CONTROLS (1 AMP).

MAXIMUM STEAM DEMAND. LBS. PER. HR.	8113 9113	8116, 10 9116, 10
	30	70

ELECTRIC HEAT MODEL NO. SUFFIX (E)	8113 9113		8106, 10 9106, 10		8106, 10 9106, 10	
SPECIFY SERVICE	KW	AMP	KW	AMP	KW	AMP
120/208V-1 PH-3 WIRE	8	33	11.5	54	15	72
120/208V-3 PH-4 WIRE	8	22	11.5	31	15	42
120/240V-1 PH-3 WIRE	10.5	44	12	50	15	63
240V-3 PH-3 WIRE	10.5	25	12	29	15	36
480V-3 PH-3 WIRE	12	14	12	14	15	18

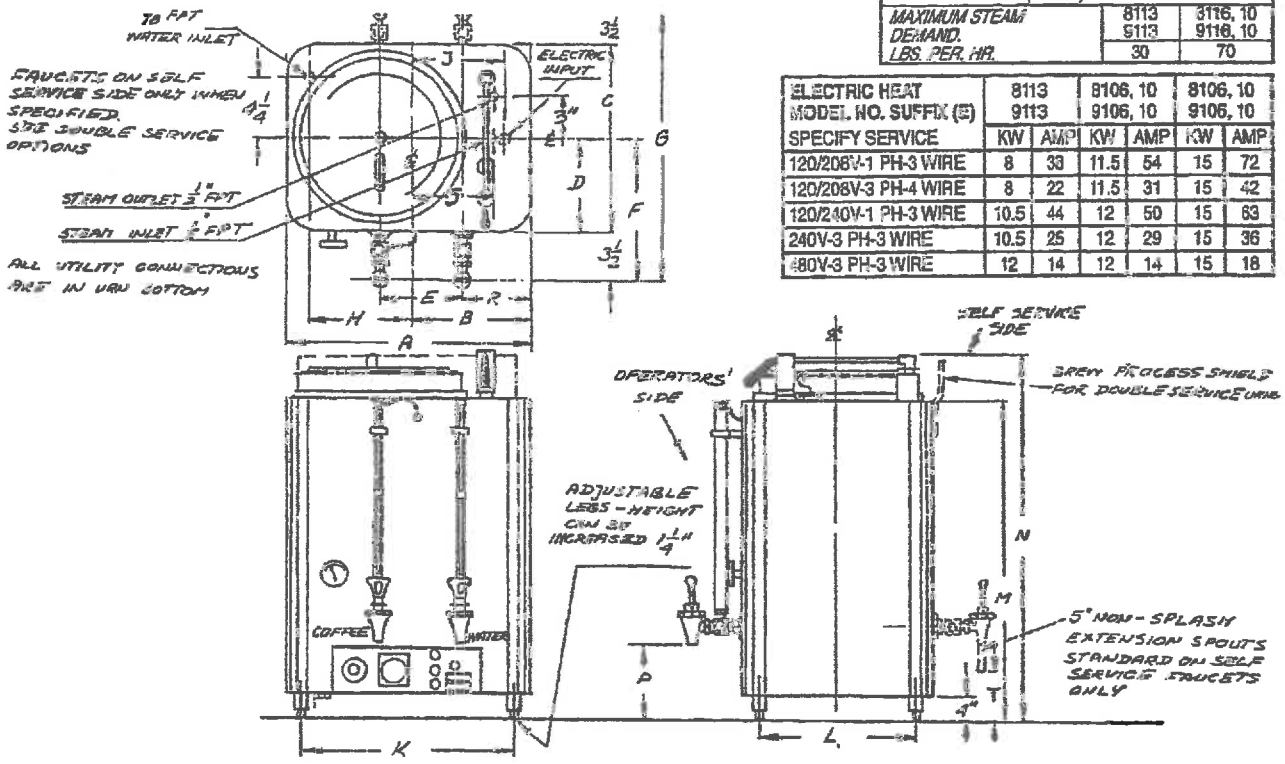

IF 120V SERVICE NOT AVAILABLE SPECIFY OPT. 22 CONTROL CIRCUIT TRANSFORMER.

MODEL	BREW LINER VOL. (GAL.)	TOTAL WATER VOL. (GAL.)	BREW BASKET USED	PAPER FILTER SIZE	BAG RING SIZE	LINER BAG SIZE
8113, 9113	3	3	BB3	18 X 6	12 1/2	14 X 9
8116, 9116	6	20	BB6	21 X 9	14	17 X 9
81110, 91110	10	24	BB10	25 X 11	15	17 X 9

Drawing #090-305

Rough In Specifications for 8000 Twin Space Saver Urn

MODEL	A	B	C	D	E	F	G	K	L	N	P	R
8103	31 1/2	15 3/4	16 1/4	8 1/8	7 3/4	11 5/8	23 1/4	27 1/2	12	27 1/2	11 5/8	6 5/8
8106	35	17 1/2	17 3/4	8 7/8	8 5/8	12 3/8	24 3/4	31	13 3/4	33 1/2	12	7
81010	35	17 1/2	17 3/4	8 7/8	8 5/8	12 3/8	24 3/4	31	13 3/4	37	12	7
9103	30 1/2	15 1/4	15 1/4	7 5/8	7 3/4	11 1/8	22 1/4	27 1/2	12	27 1/2	11 5/8	6 5/8
9106	34	17	16 3/4	8 3/8	8 5/8	11 7/8	23 3/4	31	13 3/4	33 1/2	12	7
91010	34	17	16 3/4	8 3/8	8 5/8	11 7/8	23 3/4	31	13 3/4	37	12	7

DOUBLE SERVICE OPTIONS

OPT. NO.	DESCRIPTION
DS-1	3 FAUCETS REAR, NO GAUGES
DS-2	3 FAUCETS REAR WITH GAUGES

STEAM HEAT MODEL NO. SUFFIX (S)
SPECIFY STEAM PRESSURE.
STANDARD IS 10 TO 25 PSIG.
OTHER PRESSURE EXTRA COST. 6'-120V/3 WIRE CORD PLUG SUPPLIED FOR CONTROLS (1 AMP).

ELECTRIC HEAT MODEL NO. SUFFIX (E)	8103 9103		8106, 10 9106, 10	
SPECIFY SERVICE	KW	AMP	KW	AMP
120/208V-1 PH-3 WIRE	11.5	54	15	72
120/208V-3 PH-4 WIRE	11.5	31	15	42
120/240V-1 PH-3 WIRE	12	50	15	63
240V-3 PH-3 WIRE	12	29	15	36
480V-3 PH-3 WIRE	12	14	15	18

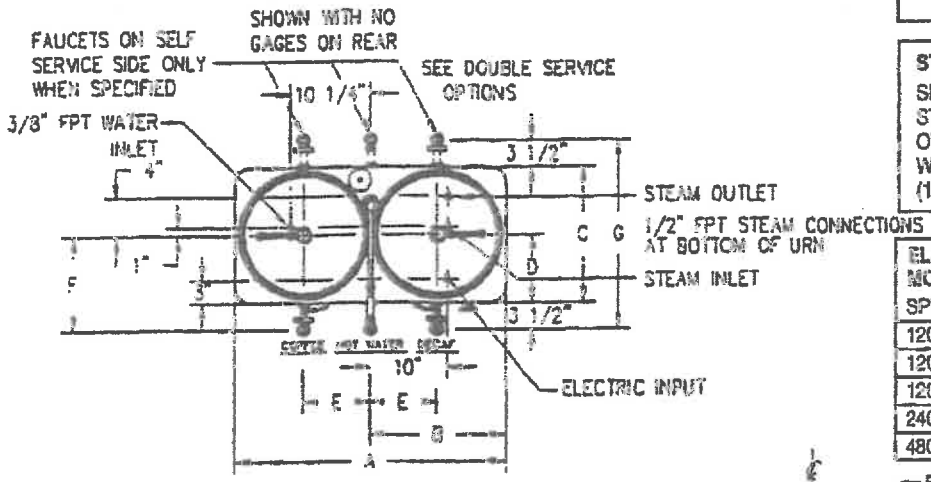

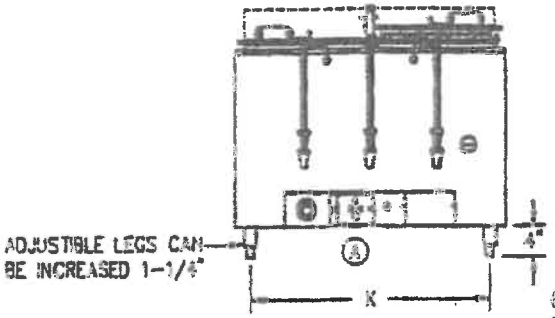

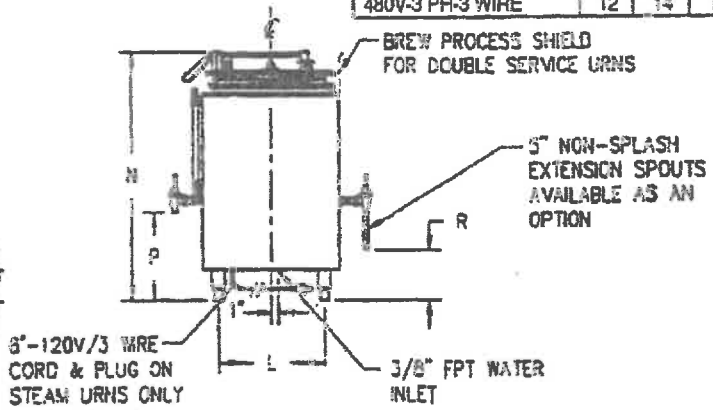

MODEL	BREW LINER VOL. (GAL.)	TOTAL WATER VOL. (GAL.)	BREW BASKET USED	PAPER FILTER SIZE	BAG RING SIZE	LINER BAG SIZE
8103, 9103	3	3	BB3	18 X 6	12 1/2	14 X 9
8106, 9106	6	20	BB6	21 X 9	14	17 X 9
81010, 91010	10	24	BB10	25 X 11	15	17 X 9

Drawing #090-779

Rough In Specifications for 8000 Triple Space Saver Urn

MODEL	A	B	C	D	E	F	G	H	I	K	L	N	P	R	S	T
7303	46	23	15 1/4	7 5/8	15 1/2	7 3/4	18 3/4	22 1/4	11 1/8	42	12	27 1/2	11 5/8	6 5/8	1	5 3/4
7306	51 1/4	25 5/8	16 3/4	8 3/8	17 1/4	8 5/8	20 1/4	23 3/4	11 7/8	47 1/4	13 3/4	33 1/2	12	7	1 7/8	6 5/8
73010	51 1/4	25 5/8	16 3/4	8 3/8	17 1/4	8 5/8	20 1/4	23 3/4	11 7/8	47 1/4	13 3/4	37	12	7	1 7/8	6 5/8
8303	47	23 1/2	16 1/4	8 1/8	15 1/2	7 3/4	19 3/4	23 1/4	11 5/8	42	12	27 1/2	11 5/8	6 5/8	1	5 3/4
8306	52 1/4	26 1/8	17 3/4	3 7/8	17 1/4	8 5/8	21 1/4	24 3/4	12 3/8	47 1/4	13 3/4	33 1/2	12	7	1 7/8	6 5/8
83010	52 1/4	26 1/8	17 3/4	8 7/8	17 1/4	8 5/8	21 1/4	24 3/4	12 3/8	47 1/4	13 3/4	37	12	7	1 7/8	6 5/8

STEAM HEAT MODEL NO. SUFFIX (S)
SPECIFY STEAM PRESSURE.
STANDARD IS 10 TO 25 PSIG.
OTHER PRESSURE EXTRA COST. 6'-120V/3 WIRE CORD PLUG SUPPLIED FOR CONTROLS (1 AMP).

NOTE:
FAUCETS ON SELF SERVICE ONLY WHEN SPECIFIED

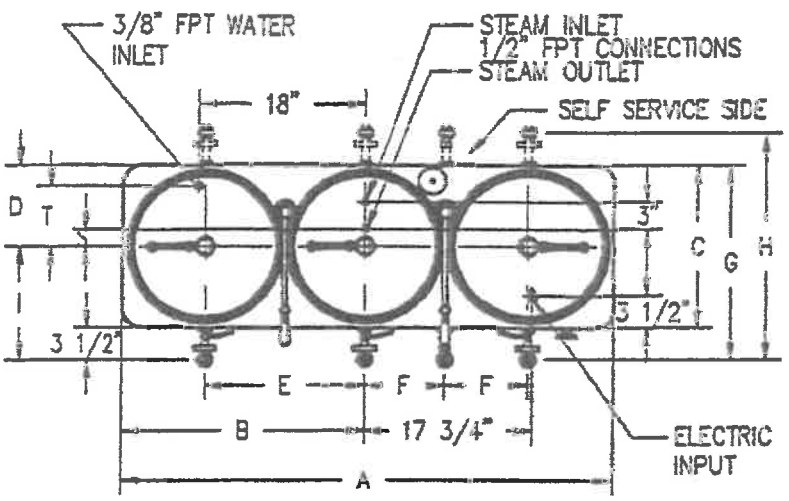

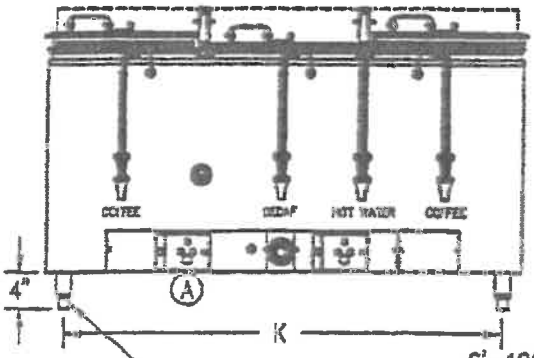

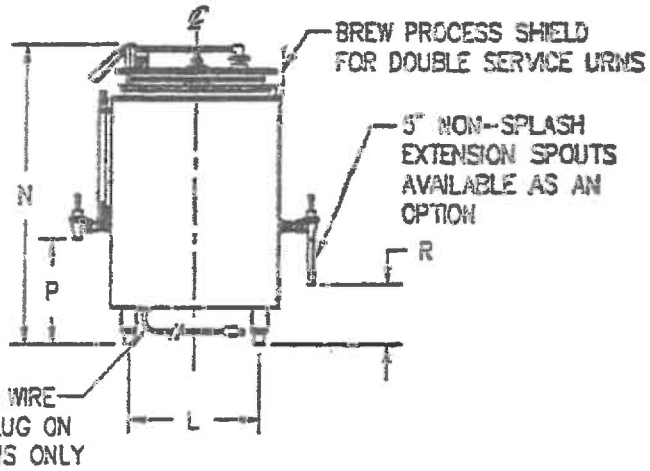

ADJUSTIBLE LEGS CAN BE INCREASED 1-1/4"

6'-120V/3 WIRE CORD & PLUG ON STEAM URNS ONLY

ELECTRIC HEAT MODEL NO. SUFFIX (E)	7303		7306		73010		8303		8306		83010	
SPECIFY SERVICE	KW	AMP	KW	AMP	KW	AMP	KW	AMP	KW	AMP	KW	AMP
120/208V-1 PH-3 WIRE	6	29	8.5	41	15	72	11.5	54	15	72	15	72
120/208V-3 PH-4 WIRE	8	22	11.5	31	15	42	11.5	31	15	42	15	42
120/240V-1 PH-3 WIRE	8	34	11.5	48	15	63	12	50	15	63	15	63
*240V-3 PH-3 WIRE	10.5	25	12	29	15	36	12	29	15	36	15	36
*480V-3 PH-3 WIRE	12	14	12	14	15	18	12	14	15	18	15	18

*Requires Separate 120V Supply For Controls (7 Amp)

Drawing #090-780

Wiring Diagram for all Series Urns with Air Agitation
(Does not apply to Pourover Urns)

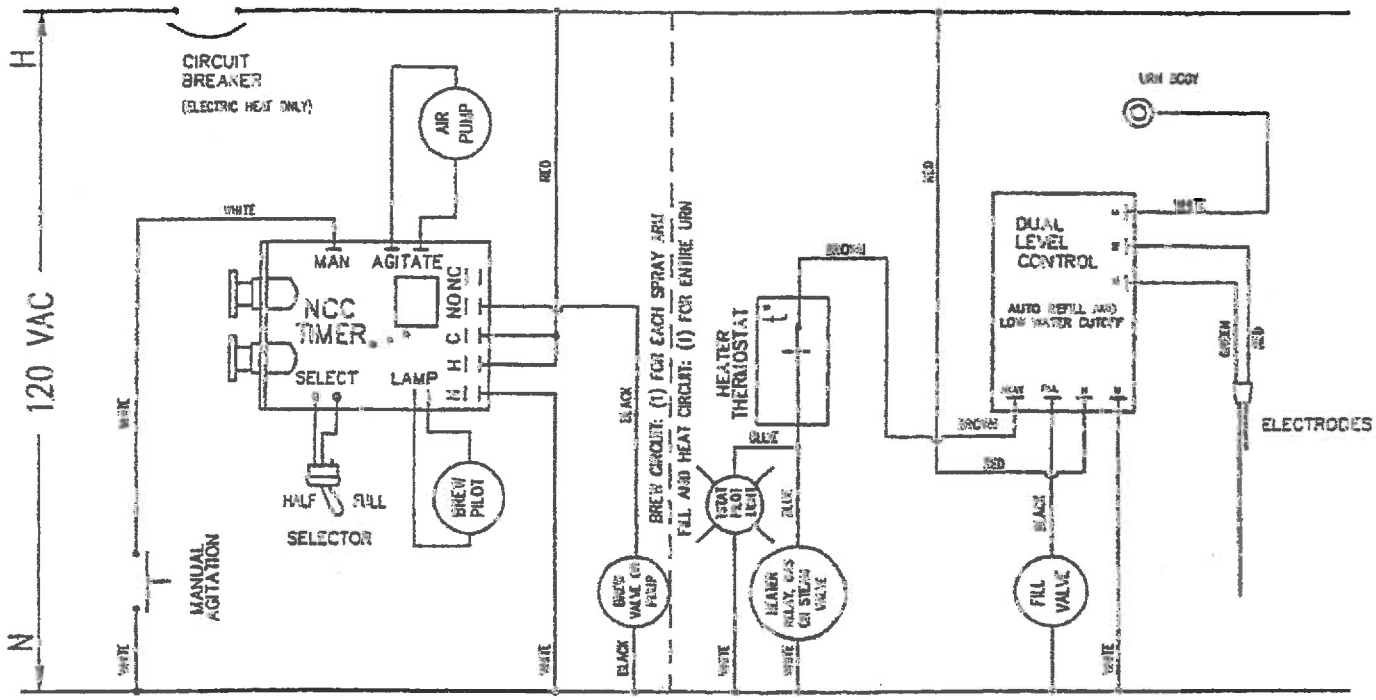

STOP

START

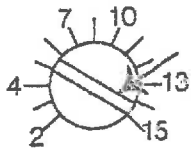

SCREWDRIVER SLOT

TIMER ADJUSTMENT UNDER SNAP PLUG ON CONTROL PANEL FACE

NOTES:
1) GAS ONLY AVAILABLE ON 7400 AND 7700 SERIES.
2) STEAM VALVE LEADS ARE BLACK OR RED.

Drawing #091-537

Wiring Diagram for all Series Urns with Low Temp No Brew
(Does not apply to Pourover Urns)

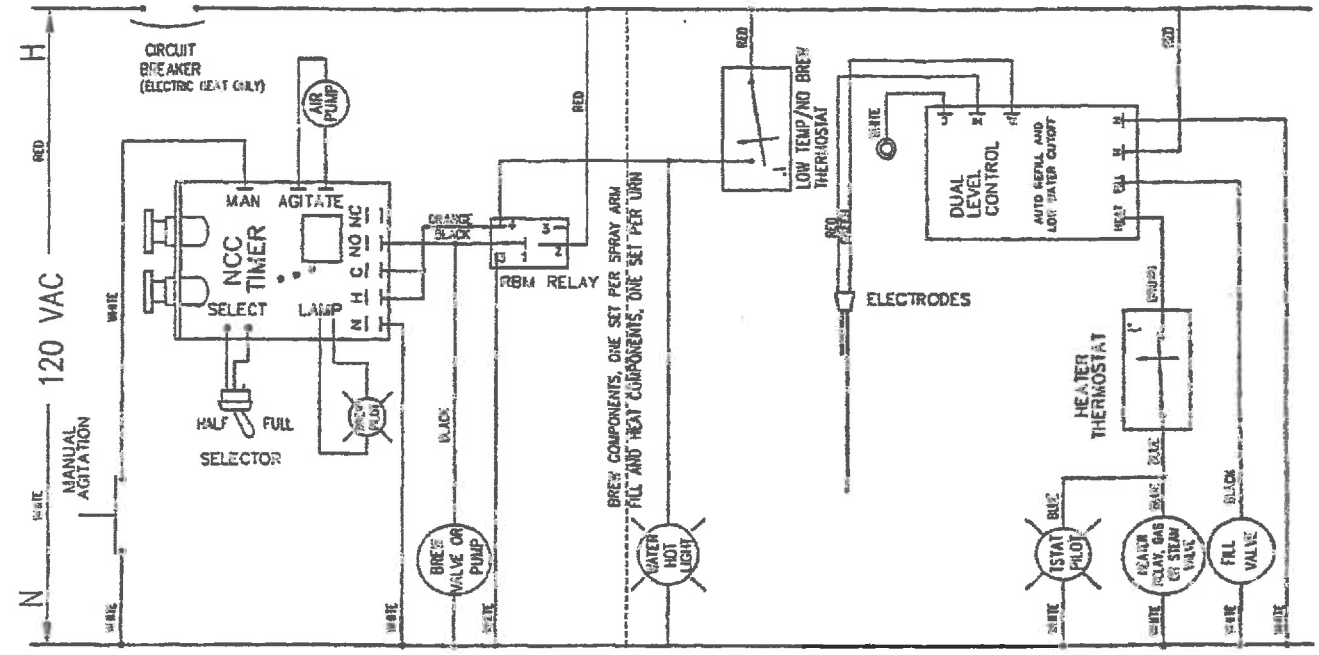

SWITCHING FROM RBM TO 2 POLE RELAY

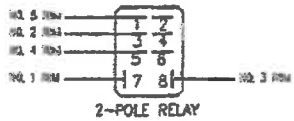

STOP

START

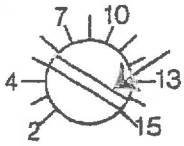

SCREWDRIVER SLOT

NOTES:
1) GAS ONLY AVAILABLE ON 7400 AND 7700 SERIES.
2) STEAM VALVE LEADS ARE BLACK OR RED.

TIMER ADJUSTMENT UNDER SNAP PLUG ON CONTROL PANEL FACE

Drawing #091-538

Wiring Diagram for all Series Urns with No Air Agitation
(Does not apply to Pourover Urns)

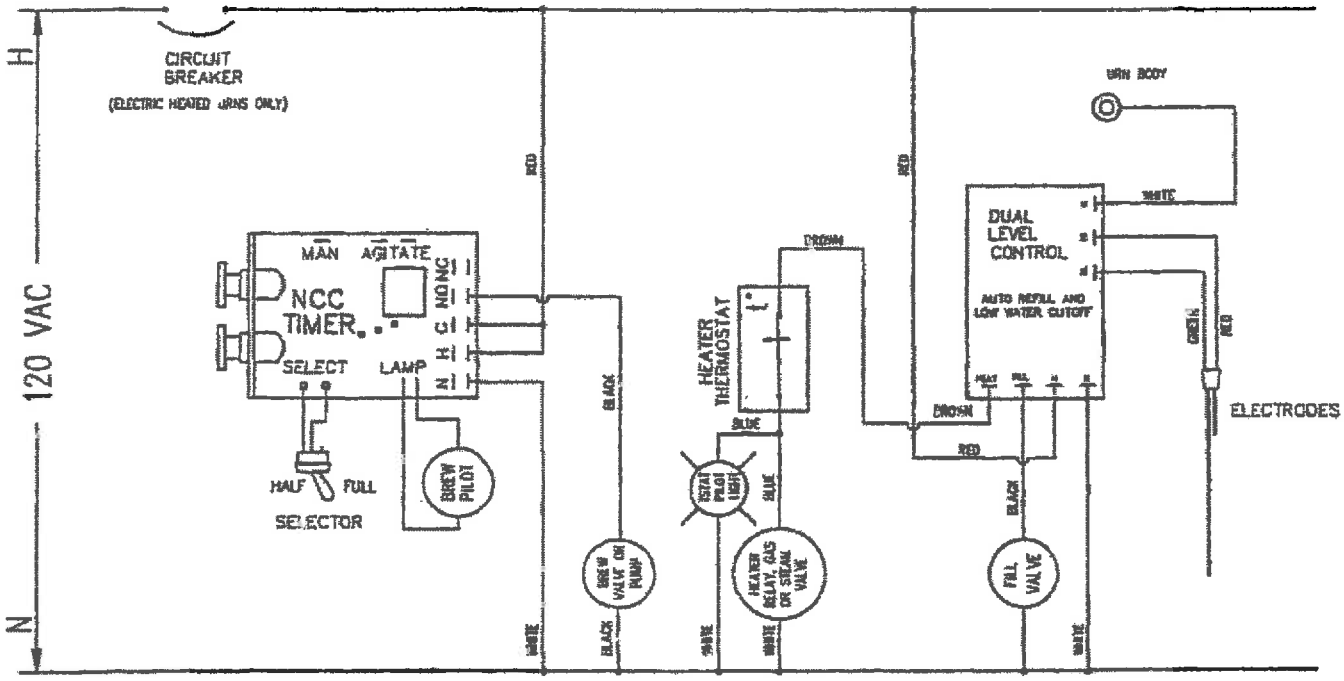

STOP

START

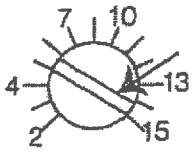

SCREWDRIVER SLOT

TIMER ADJUSTMENT UNDER SNAP PLUG ON CONTROL PANEL FACE

NOTES:
1) GAS ONLY AVAILABLE ON 7400 AND 7700 SERIES.
2) STEAM VALVE LEADS ARE BLACK OR RED.
3) USE THIS DIAGRAM FOR MODELS: 8215, OR CH SERIES, AND OTHER SINGLE OR TWIN URNS WITHOUT AGITATION.

Drawing #091-541

Wiring Diagram for Optional Seven Day Timer

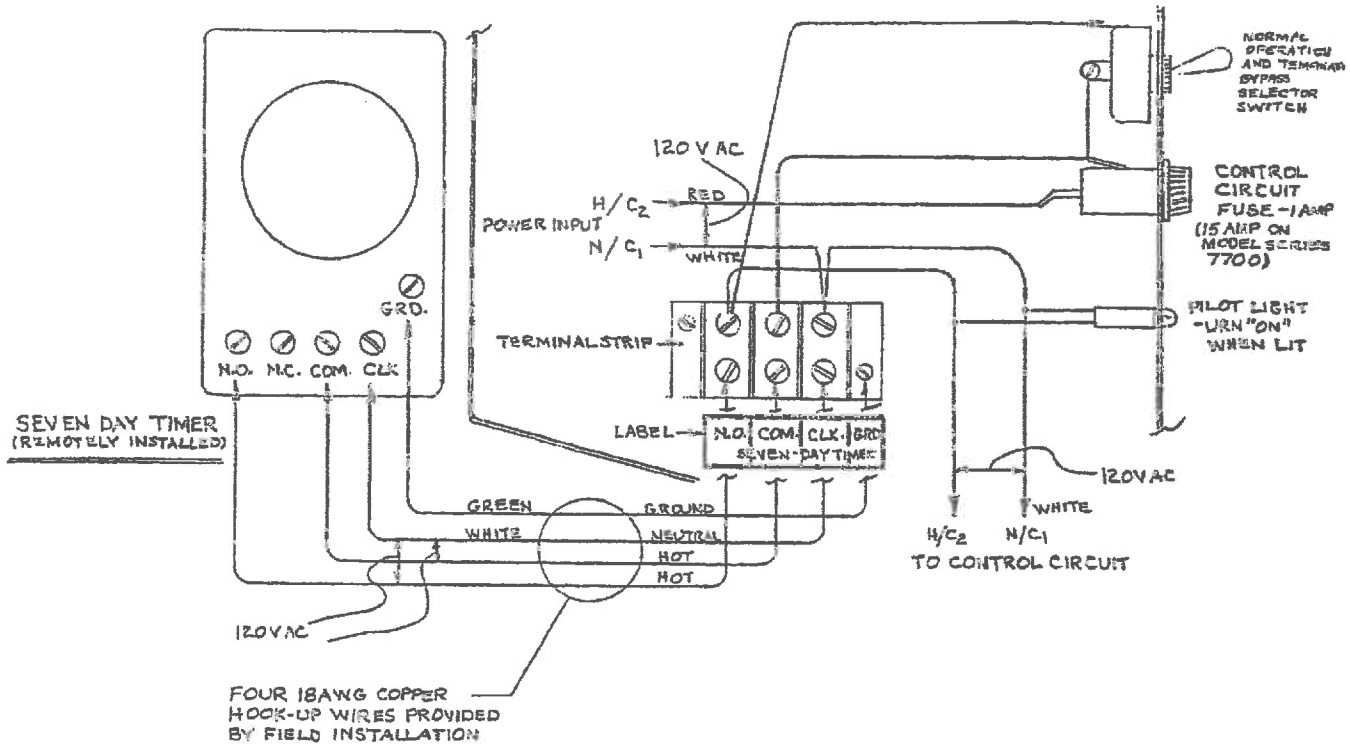

NOTE: MAY HAVE CIRCUIT BREAKER INSTEAD OF FUSE.

Drawing #A-987

Wiring Diagram for Optional High Speed Fill Jug

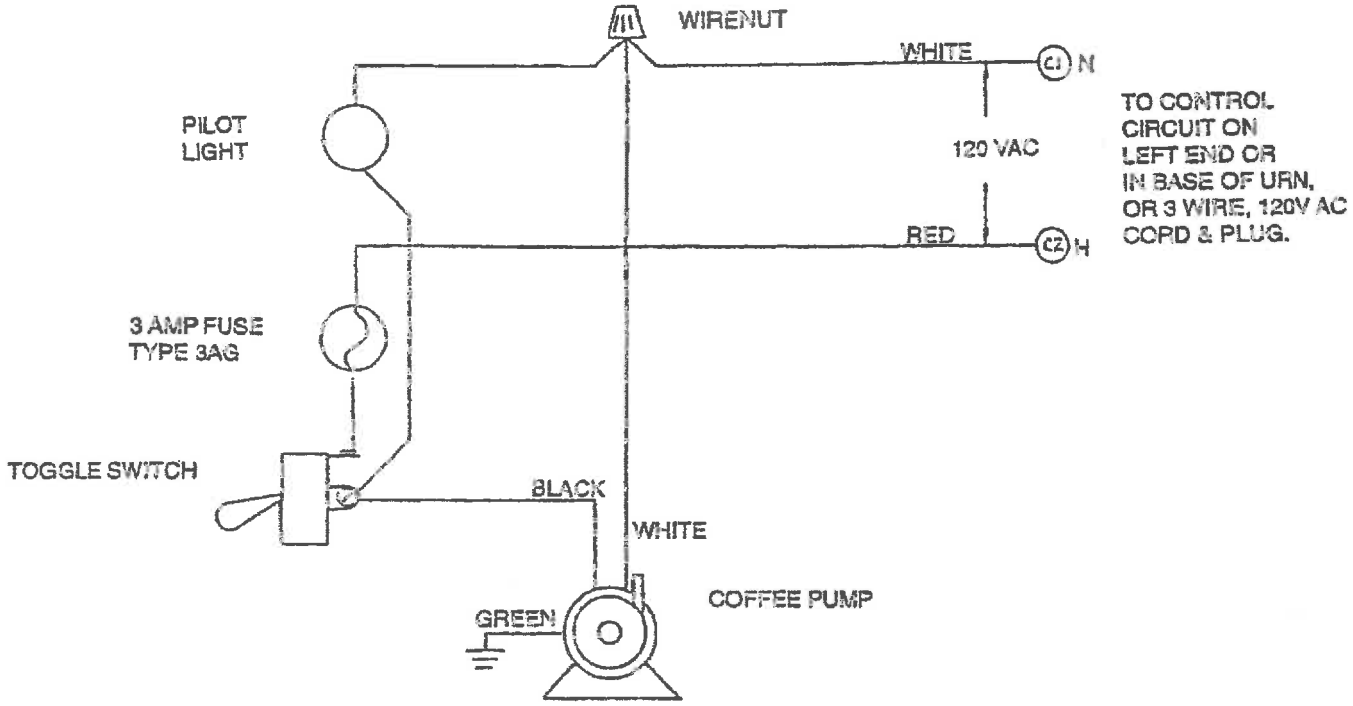

Drawing #A-1001

Wiring Diagram for 208V-240V 2 or 3 Heating Element Wiring (All Urns)

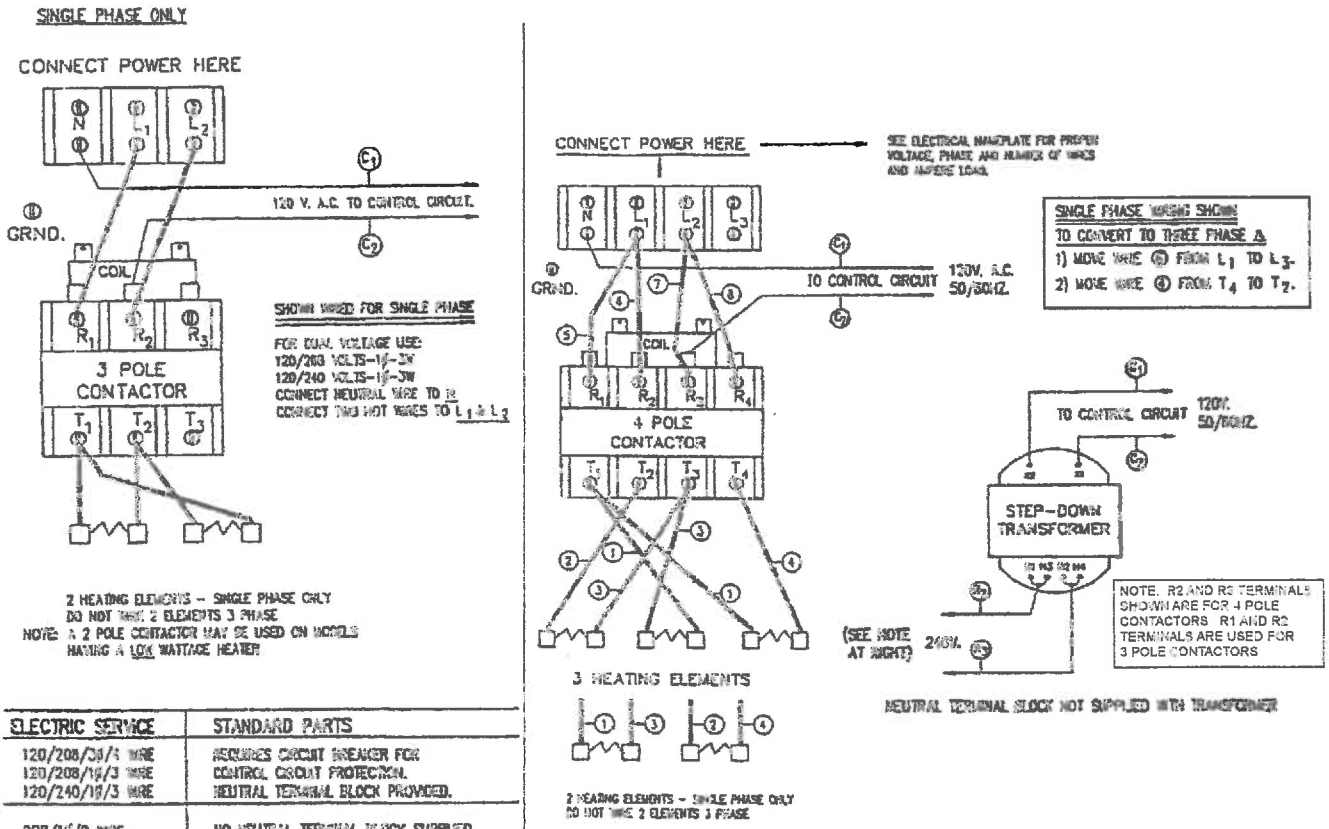

ELECTRIC SERVICE	STANDARD PARTS
120/208/3ϕ/4 WIRE 120/208/1ϕ/3 WIRE 120/240/1ϕ/3 WIRE	REQUIRES CIRCUIT BREAKER FOR CONTROL CIRCUIT PROTECTION. NEUTRAL TERMINAL BLOCK PROVIDED.
208/1ϕ/2 WIRE 240/1ϕ/2 WIRE 240/3ϕ/3 WIRE 208/3ϕ/3 WIRE	NO NEUTRAL TERMINAL BLOCK SUPPLIED. NON PUMP TYPE URNS INCLUDE STEPDOWN TRANSFORMER OR SEPARATE 120V CORD FOR CONTROL CIRCUIT. PUMP TYPE AND REMOTE DISPENSING URNS HAVE SEPARATE 120V CORD FOR CONTROL CIRCUIT.

Drawing #091-227

Wiring Diagram for 380V-480V 3PH, 3 Element Wiring (All Urns)

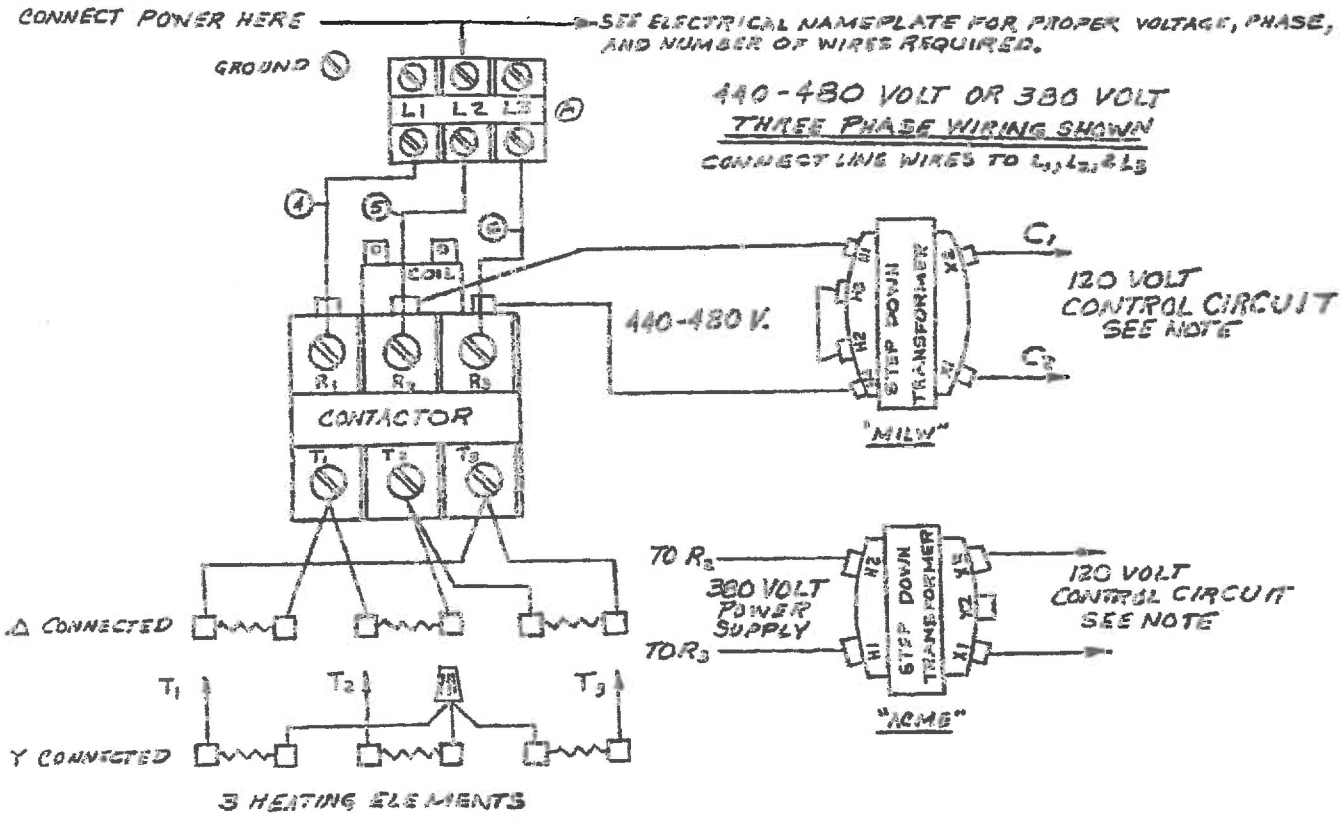

NOTE: PUMP URNS AND REMOTE DISPENSING URNS HAVE A SEPARATE CORD AND PLUG FOR CONTROL CIRCUIT.

Drawing #091-027

Wiring Diagram for 208V-240V Alternate Low Water Heater

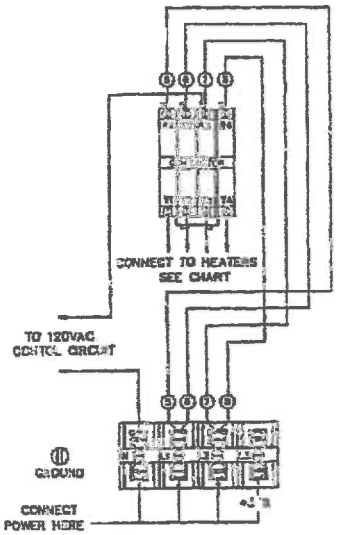

120/208V – 1 PH – 3 WIRE
120/240V – 1 PH – 3 WIRE
120/208V – 3 PH – 4 WIRE
(WITH NEUTRAL WIRE)

* FOR 3 PHASE WIRING
1. MOVE WIRE ⑤ FROM L1 TO L3
2. CONNECT HEATER ACCORDING TO FIG. E ON CHART
3. FIG. E FOR 3 PH ONLY

NOTE: USE WIRE NUT FOR ① – ① CONNECTION

T2	T3	T3	T4	T4	T4	A
T2	T3	T3	①	①	T1	B
T3	T3	T3	T1	T1	T4	C
T2	T3	T3	T1	T1	T4	D
T2	T3	T3	T1	T1	T2	E

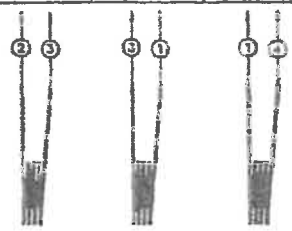

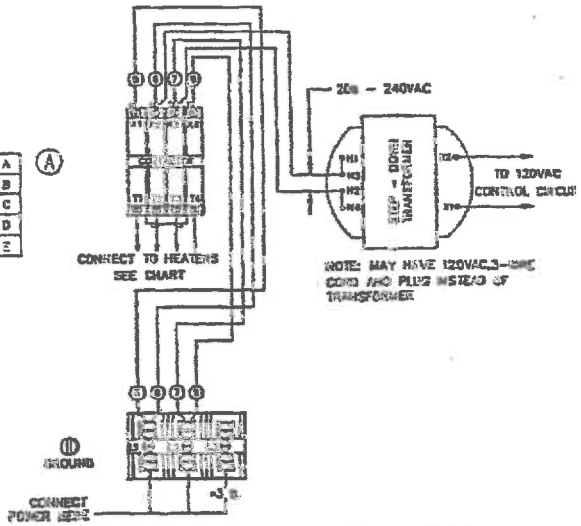

208V OR 240V – 1 PH – 2 WIRE
208V OR 240V – 3 PH – 3 WIRE

* FOR 3 PHASE WIRING
1. MOVE WIRE ⑤ FROM L1 TO L3
2. CONNECT HEATER ACCORDING TO FIG. E ON CHART
3. FIG. E FOR 3 PH ONLY

240V HEATERS

EACH HTR. SIZE	120V SERVICE									
	A		B		C		D		E *	
	KW	AMPS	KW	AMPS	KW	AMPS	KW	AMPS	KW	AMPS
2.5 KW	2.5	13	4.0	19	5.0	25	8.0	38	8.0	25
4.0 KW	3.0	14	4.5	22	6.0	28	9.0	43	9.0	25
5.0 KW	4.0	19	6.5	27	7.5	35	11.5	54	11.5	31
5.7 KW	4.3	21	6.5	31	8.5	41	13	62	13	38
8.3 KW	5.0	24	7.5	36	10.0	48	15.0	72	15.0	42
EACH HTR. SIZE	240V SERVICE									
	A		B		C		D		E *	
	KW	AMPS	KW	AMPS	KW	AMPS	KW	AMPS	KW	AMPS
2.5 KW	3.5	15	5.0	22	7.0	28	10.5	44	10.5	25
4.0 KW	4.0	17	6.0	25	8.0	33	12.0	50	12.0	29
5.0 KW	5.0	21	7.5	31	10.0	42	15.0	63	15.0	36

* 3 PH. – ONLY

WIRES ⑤⑥⑦⑧ ARE 3 AWG,105°C
①②③④ ARE 10 AWG,105°C

Drawing #091-024

Midline and Space Saver Urn Series
WARRANTY
For Models 7000, 8000, 9000, Chinese Tea Urn Series

EFFECTIVE DECEMBER 1, 1995

GENERAL WARRANTY INFORMATION

Grindmaster Corporation maintains the highest standard of quality control in the manufacturing of American Metal Ware products. We use the finest components and materials, and employ quality engineering standards and tests. All American Metal Ware brewers and dispensers, except the Space Saver Model automatic coffee urns, will be warranted for a period of one year from the date of shipment. This warranty will include parts and labor but will not cover transportation and shipping charges and will be limited to equipment sold to commercial purchasers and installed in the continental U.S.A., Hawaii, Alaska and Canada.

EXCLUSIVE

Grindmaster Corporation features a two year service warranty to include parts and labor but not transportation and shipping charges on its American Metal Ware Space Saver (800 Series Model) automatic coffee urns. The warranty is limited to equipment sold to commercial purchasers and installed in the continental U.S.A., Hawaii, Alaska and Canada.

EXCEPTIONS

Coverage is not included for labor needed or caused by:

- Adjustments of temperature or flow rates or timers. These adjustments are covered in the technical manual provided and subject to user preferences.
- This warranty does not cover maintenance consumable parts such as o-rings, seat cups, washers. These are subject to NORMAL wear of everyday usage and are a responsibility of the user.
- Accident
- Improper installation
- Neglect or abuse
- Excessive lime/mineral content of water used
- Cleaning of any category. Cleaning is a user's responsibility.
- All warranties are null and void if muriatic or any other form of hydraulic acid is used for cleaning or deliming our equipment.

NOTE: THIS WARRANTY SUPERSEDES ANY OTHER WARRANTY. ALL OTHER WARRANTIES, EXPRESSED OR IMPLIED, INCLUDING THE WARRANTIES OR MERCHANTABILITY AND FITNESS FOR A PARTICULAR PURPOSE OR USE, ARE HEREBY EXCLUDED AND DISCLAIMED.

HOW TO OBTAIN WARRANTY SERVICES

Call Grindmaster Corporation Service Department toll free at 1-800-695-4500 or +1-502-425-4776, press selection three (3) for technical services or write to : Grindmaster Corporation Factory Service Center, P.O. Box 35020, Louisville, KY 40232. In order to receive warranty service, you must provide the serial number of the machine requiring service along with a description of the problem. Service will be arranged through a factory authorization center. Transportation is the user's responsibility. Should it become necessary to transport your machine to a service center, make sure it is properly packaged to avoid in-transit damage, which is not covered by this warranty.

No field, outside or service station work is covered by this warranty without prior authorization by Grindmaster Corporation Service Dept.

GRINDMASTER™

CORPORATION

Grindmaster® Coffee Grinders and Brewers • Espressimo® Espresso Machines • Crathco® Hot Beverage Dispensers
Crathco® Cold and Frozen Beverage Dispensers • American Metal Ware® Coffee and Tea Systems
Tel (502) 425-4776 • Fax (502) 425-4664 • 1-800-695-4500
P.O. Box 35020 • Louisville, KY 40232 • USA
www.grindmaster.com • email: info@grindmaster.com

Midline and Space Saver Urn Series
WARRANTY
For Models 7000, 8000, 9000, Chinese Tea Urn Series

EFFECTIVE DECEMBER 1, 1995

GENERAL WARRANTY INFORMATION

Grindmaster Corporation maintains the highest standard of quality control in the manufacturing of American Metal Ware products. We use the finest components and materials, and employ quality engineering standards and tests. All American Metal Ware brewers and dispensers, except the Space Saver Model automatic coffee urns, will be warranted for a period of one year from the date of shipment. This warranty will include parts and labor but will not cover transportation and shipping charges and will be limited to equipment sold to commercial purchasers and installed in the continental U.S.A., Hawaii, Alaska and Canada.

EXCLUSIVE

Grindmaster Corporation features a two year service warranty to include parts and labor but not transportation and shipping charges on its American Metal Ware Space Saver (800 Series Model) automatic coffee urns. The warranty is limited to equipment sold to commercial purchasers and installed in the continental U.S.A., Hawaii, Alaska and Canada.

EXCEPTIONS

Coverage is not included for labor needed or caused by:

- Adjustments of temperature or flow rates or timers. These adjustments are covered in the technical manual provided and subject to user preferences.
- This warranty does not cover maintenance consumable parts such as o-rings, seat cups, washers. These are subject to NORMAL wear of everyday usage and are a responsibility of the user.
- Accident
- Improper installation
- Neglect or abuse
- Excessive lime/mineral content of water used
- Cleaning of any category. Cleaning is a user's responsibility.
- All warranties are null and void if muriatic or any other form of hydraulic acid is used for cleaning or deliming our equipment.

NOTE: THIS WARRANTY SUPERSEDES ANY OTHER WARRANTY. ALL OTHER WARRANTIES, EXPRESSED OR IMPLIED, INCLUDING THE WARRANTIES OR MERCHANTABILITY AND FITNESS FOR A PARTICULAR PURPOSE OR USE, ARE HEREBY EXCLUDED AND DISCLAIMED.

HOW TO OBTAIN WARRANTY SERVICES

Call Grindmaster Corporation Service Department toll free at 1-800-695-4500 or +1-502-425-4776, press selection three (3) for technical services or write to : Grindmaster Corporation Factory Service Center, P.O. Box 35020, Louisville, KY 40232. In order to receive warranty service, you must provide the serial number of the machine requiring service along with a description of the problem. Service will be arranged through a factory authorization center. Transportation is the user's responsibility. Should it become necessary to transport your machine to a service center, make sure it is properly packaged to avoid in-transit damage, which is not covered by this warranty.

No field, outside or service station work is covered by this warranty without prior authorization by Grindmaster Corporation Service Dept.

GRINDMASTER™

CORPORATION

Grindmaster® Coffee Grinders and Brewers • Espressimo® Espresso Machines • Crathco® Hot Beverage Dispensers
Crathco® Cold and Frozen Beverage Dispensers • American Metal Ware® Coffee and Tea Systems
Tel (502) 425-4776 • Fax (502) 425-4664 • 1-800-695-4500
P.O. Box 35020 • Louisville, KY 40232 • USA
www.grindmaster.com • email: info@grindmaster.com

Manitowoc

RN-400 Tubular Nugget Ice Machine

RN-400 Tubular Nugget Ice Machine

Models

☒ RN-0408A

RN-0408A Nugget Ice Machine on Servend SV-250 Dispenser

RN-0408A Nugget Ice Machine on B-420 Bin

Standard Features

- Up to 385 lbs. (175 kgs) daily ice production.
- Only 22" (55.9 cm) wide.
- Perfect for beverage applications, dispensing and cold therapy.
- Evaporator is designed for maximum quality and operating life.
- 90% ice to water ratio and longer pieces makes tubular nugget ideal for dispensing without congealing.
- Great for blended drinks with less wear on blender and smoother texture.
- Optional 9" discharge tube ships in carton for dispense applications.

COMMERCIAL WARRANTY

ICE MAKER		COMPRESSOR
3 YEAR PARTS	2 YEAR LABOR	5 YEAR PARTS 2 YEAR LABOR

Specifications

BTU Per Hour: 5,000
Compressor:
Nominal rating: 1/2 HP
Refrigerant: R404A

Operating Limits:
- Ambient Temperature Range: 50°-100°F (10.0°C-37.8°C)
- Water Temperature Range: 45°-90°F (7.2°-32.2°C)
- Water Pressure Ice Maker Water In: Min. 20 psi (137.9 kPA) Max. 70 psi (483 kPA)

Ice Machine Electric

115/60/1 ice machines are factory pre-wired with a 7' (2m) power cord and NEMA 5-20 right angle plug configuration.

Total Amps: 11 amps

Maximum fuse size: 20 amps

Ice Shape

- Tubular Nugget Ice provides a softer, chewable texture while still providing maximum cooling effect.
- 5/8" (1.59 cm) diameter cylindrical-shaped nugget with average length of approximately 1" (2.54 cm).

NSF c UL US LISTED

2110 South 26th Street
PO Box 1720
Manitowoc, WI 54221-1720 USA

Tel: 1.920.682.0161
Fax: 1.920.683.7589

www.manitowocice.com

Manitowoc

Manitowoc

RN-400 Tubular Nugget Ice Machine

RN-400 on B-420
Storage Bin

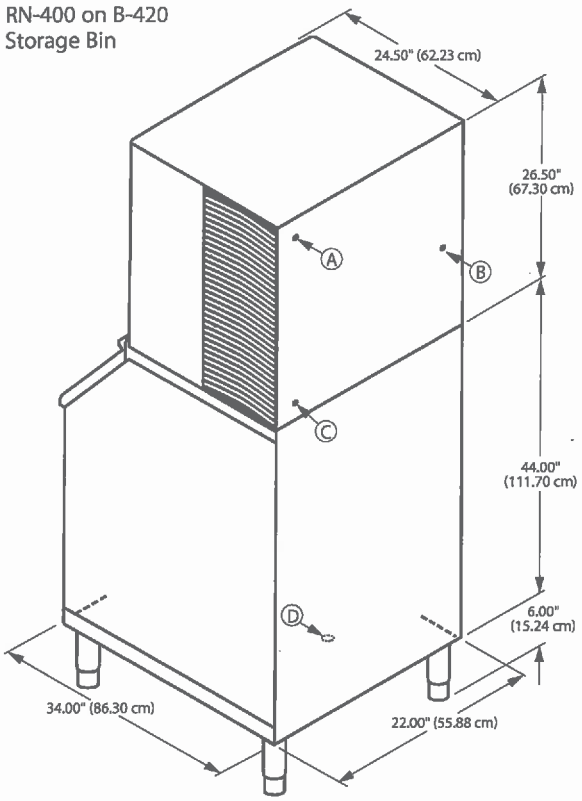

Ⓐ 3/8" F.P.T. Ice Making Water Inlet
Ⓑ Electrical Entrance
Ⓒ 3/4" M.P.T. Ice Making Water Drain
Ⓓ 3/4" Bin Drain

Installation Note -
Minimum installation clearance: Top/sides: 8" (20.32 cm), back: 5" (12.7 cm).

Dispenser Note -
Verify with the dispenser manufacturer that the correct agitator and deflector kit for nugget ice dispensing is included with your dispenser purchase.

Space Saving Designs

	RN-400 B-320	RN-400 B-420
Height	64.50" 168.83 cm	76.50" 194.3 cm
Width	22.00" 55.88 cm	22.00" 55.88 cm
Depth	34.00" 86.30 cm	34.00" 86.30 cm
Bin Storage	210 lbs. 95 kgs	310 lbs. 141 kgs

Height includes adjustable bin legs 6.00" to 7.00", (15.24 to 17.78 cm) set at 6.00" (15.24 cm).

Air Flow Top View

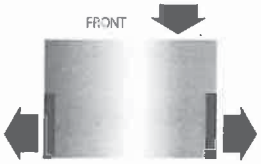

Specifications

	Model	Ice Shape	Ice Production 24 Hours 70°Air/ 50°F Water	Ice Production 24 Hours 90°Air/ 70°F Water	Power Usage kWh/100 lbs.@90°Air/70°F	Potable Water Usage/ 100 lbs. 45.4 kgs of Ice
AIR-COOLED	RN-0408A	Nugget	385 lbs.	294 lbs.	6.38	12.6 Gal.
			175 kgs	133 kgs		47.7 L

Order ice storage bin separately. "A" following model number indicates "Air" condensing unit.
Will not accept AuCS accessory.

4735A ©2011 Manitowoc 7/11 Continuing product improvement may necessitate change of specifications without notice.

2110 South 26th Street
PO Box 1720
Manitowoc, WI 54221-1720 USA

Tel: 1.920.682.0161
Fax: 1.920.683.7589
www.manitowocice.com

Manitowoc

CAMBRO

Food Bars

Ultra

Models 6UBR - 6 ft. (182 cm), 5UBR - 5 ft. (162 cm)
4UBR - 4 ft. (130 cm)

StoreSafe

Features & Benefits

- Versatility, style and durability for self-service breakfast, lunch or dinner. Accommodates GN 1/1 Full or Fractional Size Food Pans up to 6" (15 cm) deep with Divider Bars.
- Quick access sliding doors on both sides offer convenient storage.
- Double-wall polyethylene construction provides extra strength, durability and reliability. Scratch-resistant textured exterior. Simple to clean - just wipe off.
- Thick foamed-in-place polyurethane insulation maintains food temperatures and holds ice cold for hours. Provides added structural strength.
- NSF listed threaded faucet drain with a standard hose hook-up provides quick draining and cleaning.
- Four each 5" (12,7 cm) swivel casters w/ brakes ensure easy maneuvering.
- Standard accessories include protective Sneeze Guard panel made from NSF listed material.
- Optional accessories include Tray Rails, End Tables, Divider Bars, Crock Holder, and Salad Bowl Holders.
- Non-electrical.
- Easy to assemble.
- Available in 15 colors.

Item No. _____

Specifier Identification No. _____

Model No. _____

Quantity _____

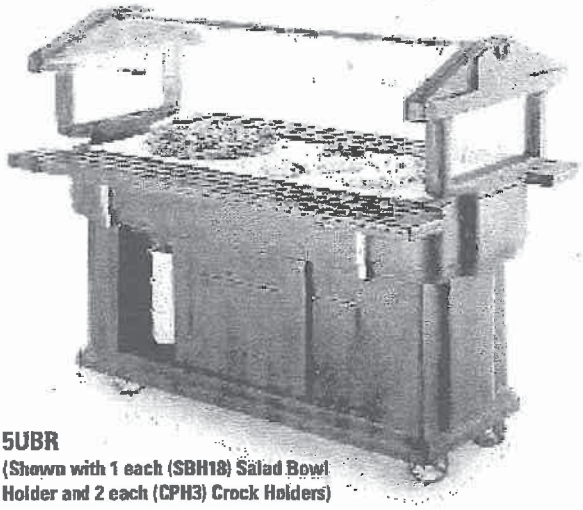

5UBR
(Shown with 1 each (SBH18) Salad Bowl Holder and 2 each (CPH3) Crock Holders)

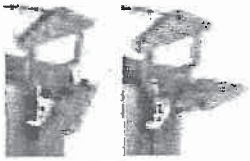

Optional End Table FBRTBL

Set Up Guide for Ultra Food Bars

Salad Bowls and Crocks

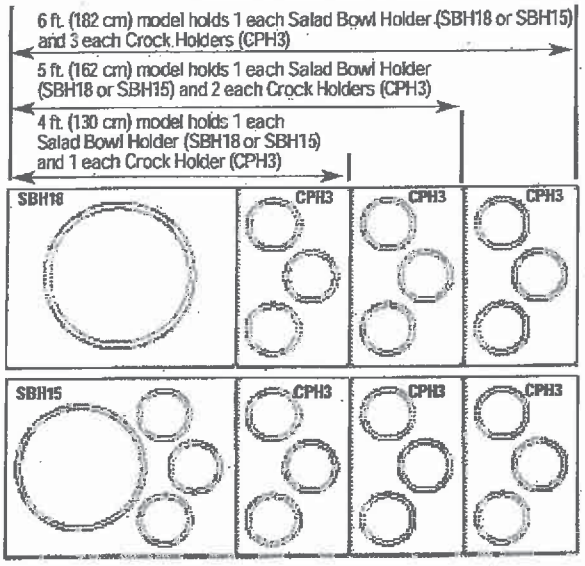

Food Pans

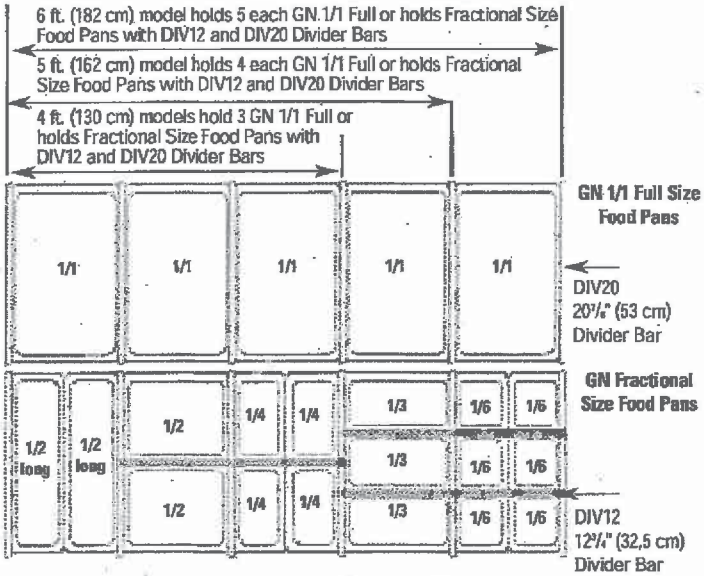

SBH18 - Holds 1 each 18" (45,7 cm) Salad Bowl
SBH15 - Holds 1 each 15" (38 cm) Salad Bowl & 3 each 1.5 qt. (1,4 L) or 2.7 qt. (2, 4 L) Crocks
CPH3 - Holds 3 each 1.5 qt. (1,4 L) or 2.7 qt. (2, 4 L) Crocks

Approvals

NSF

© 2002 Cambro Manufacturing Company 5801 Skylab Road, Huntington Beach, California 92647-2056-U.S.A.
Telephone (1)714 848 1555 **Toll Free** 800 854 7631 **Customer Service Hot Line** 800 833 3003
LIT FCST-0102-75

Food Bars

Ultra

Models 6UBR - 6 ft. (182 cm), 5UBR - 5 ft. (162 cm)
4UBR - 4 ft. (130 cm)

Item No. _____

Specifier Identification No. _____

Model No. _____

Quantity _____

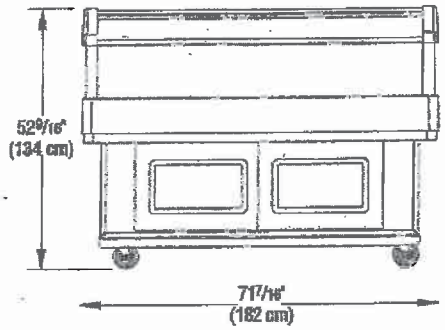

6UBR

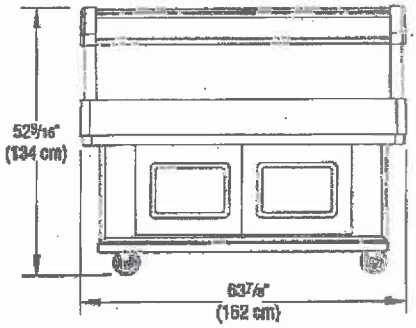

5UBR

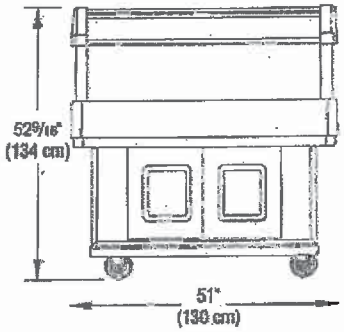

4UBR

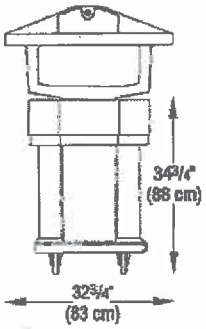

Width dimension

Specifications

Dimension Tolerance: +/- ¼" (0.64 cm)

Code	Description	GN 1/1 Full Size Food Pan Capacity	Exterior Dimensions L x W x H	Case lbs./cube Kg/m³
6UBR	6 ft. (182 cm) Ultra Food Bar	5	71 7/16" x 32¾" x 52 9/16" (182 x 83 x 134 cm)	170 (44.36) 77 (1,2)
5UBR	5 ft. (162 cm) Ultra Food Bar	4	63 7/8" x 32¾" x 52 9/16" (162 x 83 x 134 cm)	161 (39.50) 73 (1,1)
4UBR	4 ft. (130 cm) Ultra Food Bar	3	51" x 32¾" x 52 9/16" (130 x 83 x 134 cm)	143 (39.50) 65 (1,1)

Optional Accessories

Tray Rails
- ☐ FBR6R (6 ft.) (182 cm)
- ☐ FBR5R (5 ft.) (162 cm)
- ☐ FBR4R (4 ft.) (130 cm)

End Table ☐ FBRTBL

3-Crock Holder ☐ CPH3 (holds 1.5 qt. (1,4 L) and 2.7 qt. (2,4 L) crocks)

Salad Bowl Holders
- ☐ SBH15 (holds one 15" (38 cm) bowl, 3 crocks)
- ☐ SBH18 (holds one 18" (46 cm) bowl)

Divider Bars ☐ DIV12 ☐ DIV20

Standard Colors

- ☐ Black (110)
- ☐ Coffee Beige (157)
- ☐ Navy Blue (186)
- ☐ Green (519)
- ☐ Granite Green (192)
- ☐ Slate Blue (401)
- ☐ Dark Brown (131)
- ☐ Dusty Rose (400)
- ☐ Hot Red (158)
- ☐ Granite Red (193)
- ☐ Brick Red (402)
- ☐ Cold Blue (159)
- ☐ Gray (180)
- ☐ Granite Gray (191)
- ☐ Granite Sand (194)

Divider Bar:
- ☐ White (148)
- ☐ Clear (035)

Crock Holder and Salad Bowl Holder:
- ☐ White (148)

Architect Specs

The non-electrical portable foodservice food bar shall be a Floor Model Ultra Food Bar, Model..., manufactured by Cambro Mfg. Co., Huntington Beach, CA 92648 U.S.A. It shall be made of double-wall polyethylene and foam-injected polyurethane insulation. It shall have sliding doors on both sides for convenient storage. It shall have 4 each, 5" (12,7 cm) swivel casters w/ brakes. It shall hold optional accessories such as the Cambro Salad Bowl Holders (SBH18 and SBH15) and Crock Holder (CPH3) or a selection of GN Full or Fractional Size Food Pans with Divider Bars. The depth of the interior food wells shall be 6½" (16,5 cm). It shall be available with optional end tables and side tray rails. It shall include a sneeze guard and protective end panels. It shall have an NSF Listed threaded faucet drain with a standard hose hook up. It shall be available in 15 colors.

Approvals

NSF

CAMBRO MANUFACTURING COMPANY

© 2002 Cambro Manufacturing Company 5801 Skylab Road, Huntington Beach, California 92647-2056-U.S.A.
Telephone (1)714 848 1555 **Toll Free** 800 854 7631 **Customer Service Hot Line** 800 833 3003

Printed in USA

The WEBstaurant store

http://www.gotowebstore.com/135CHDT3-208/240

WEBstaurantStore.com > Restaurant Equipment > Food Holding Equipment and Food Warming > Hot / Cold Food Wells and Soup Wells > Dual Temperature Food Wells > **APW Wyott CHDT-3 3 Pan Cold / Hot Dual Temp Well**

APW Wyott CHDT-3 3 Pan Cold / Hot Dual Temp Well

FREE SHIPPING!

Each Only

~~$4,534.50~~/Eac

To see our price

Add this item to your cart.

(You can remove it at any time.)

Why do we do this?

Requires Base & Sneeze Guard

- ✓ 1" drain and screen
- ✓ Hot operation: 208/240V, 3000/4000W Cold operation: 120V, 1/3 HP
- ✓ UL and NSF Listed

Companion Items

2 1/2" Deep, Full Size Standard Weight Stainless Steel Steam

$11.49/Each

6" Deep, Full Size Standard Weight Stainless Steel Steam

$18.99/Each

Item:	135CHDT3 208/240
Units:	Each
Ship...	Usually Ships in 2-3 Business Days
MFR...	CHDT-3

Details

White Glove Delivery

Perfect for buffet lines, salad bars, or catered events, this versatile APW Wyott CHDT-3 3 pan cold / hot dual temp well is equipped to keep either hot or cold food at safe temperatures! If the occasion calls for you to serve soup, sauce, or other hot foods, the unit uses an immersion heating system to warm your food. If a cold well is what you need for salad, fruit cocktail, or other chilled goods, this dual temp well's powerful compressor will start pumping refrigerant to keep your food cold. Switching from hot to cold takes nothing more than the flip of a switch!

The APW Wyott CHDT-3 3 pan cold / hot dual temp well has easily accessible temperature controls for both hot and cold operation. The heated system is controlled by a manual dial while the refrigerated system is digitally controlled with an LCD readout. Built with your convenience in mind, this dual temp well is made of heavy duty stainless steel for long-lasting performance, and can even be easily mounted into metal or wooden countertops for space

SPECS

Width	46 3/4 Inches
Depth	27 1/8 Inches
Height	24.325 Inches
Amps	7.0 - 16.7 Amps
Hertz	60
Phase	1
Voltage	120 Volts
Voltage	208/240
Wattage	3000 - 4000 Watts
Control Type	Dial
Installation Type	Drop In
Insulated	No
Material	Stainless Steel
Pan Capacity	3 Pans
Power Type	Electric
Style	Top Mount
Water Pan Required	No

- AVAILABLE -

What is White Glove service?

View all APW Wyott Dual Temperature Food Wells

Downloads

Specsh Manual Warran

A PDF viewer is required to view this product's information. Download Adobe Acrobat software

Warranty Info

RESIDENTIAL USERS: APW Wyott assumes no liability for parts or labor coverage for component failure or other damages resulting from installation in non-commercial or residential applications.

saving efficiency.

The warmer for the APW Wyott CHDT-3 3 pan cold/hot dual temp well requires a 208/240V electrical connection, while the refrigeration system requires a 120V connection. The unit's 1/3 HP motor uses R404A refrigerant. It is UL and NSF Listed.

Overall Dimensions
Width: 46 3/4"
Depth: 27 1/8"
Height: 24 3/8"

Also known as CHDT3 and CHDT 3.

This Item Ships via Common Carrier. For more information and tips to help your delivery go smoothly, click here.

Because this item is not stocked in our warehouse, processing and transit times will vary. If you need your items by a certain date, please note this in the comment section while checking out! Please feel free to log on to our Live Chat should you have any questions before placing your order. After your order is placed, we will update you via email to let you know how this will be shipping to you.

Certifications

Related Items

"Your Solutions Partner"

Specifications

F.O.B. Sedalia, Missouri 65301

E303

OPTIONS:

- ❑ 3-phase wiring
- ❑ 1000 watt elements
- ❑ Stainless steel heat compartment liner - ***FMOD-SS-LINER***
- ❑ Stainless steel cutting board in lieu of poly
- ❑ Hardwood cutting board in lieu of poly
- ❑ Drop type brackets for cutting board
- ❑ Casters - ***EPxxx***
- ❑ Stainless steel feet - ***SS-FEET***
- ❑ Serving shelves - ***656-xS/656-460-xS/956-xS/956-460-xS***
- ❑ Glass display shelves - ***98x***
- ❑ Shelves/Carving boards - ***441-xS/442-xS/445-xS***
- ❑ Buffet shelves - ***63x/73xFL/73xBL/73xHT/83x/93xFL/83xBL/93xHT***
- ❑ Adapter plates - ***31, 32, 33***
- ❑ Insets/Inset Covers - ***521, 522, 523***
- ❑ Telescope covers - ***546, 548***
- ❑ Tubular tray slides - ***3BTS-FX-x/HD-x***
- ❑ Spillage pans - ***576, 676***

AGENCY LISTINGS:

c UL us LISTED

DUKE MANUFACTURING CO.
2305 N. Broadway
St. Louis, MO 63102

800.735.3853 Toll Free
314.231.1130 In Missouri
314.231.5074 Fax
www.dukemfg.com

Approval Stamp(s):

PROJECT INFORMATION:

PROJECT: _____
ITEM: _____
QUANTITY: _____

MODEL:

Aerohot Steamtables
Hot Food Units - Electric

- ❑ ***E302*** 2 top openings
- ❑ ***E303*** 3 top openings
- ❑ ***E304*** 4 top openings
- ❑ ***E305*** 5 top openings

TOP:

- 20 gauge, 300 Series stainless steel
- Die-stamped openings - 12" x 20"
- Poly carving board - 7"W x 1/2" thick with 18 gauge stainless steel support base and die-stamped brackets

HEAT COMPARTMENTS:

- Each with die-formed 8" deep galvanized liner
- Insulated with 1" thick fiberglass or equal, all four sides and bottom
- Single phase standard

BODY, UNDERSHELF AND LEGS:

- 20 gauge, 430 Series stainless steel body
- 18 gauge, 430 Series stainless steel undershelf
- 430 Series stainless steel tubular legs with adjustable plastic feet

ELECTRICAL INFORMATION:

- ❑ 500 or 750 watt dome-type element for each compartment
- ❑ Wired to operate on 120, 208 or 240 volt
- ❑ Single or three phase
- AC current
- Each section with infinite switch
- Permanently wired, 6' long cord with plug provided

SHORT FORM SPECIFICATIONS:

Duke Aerohot Steamtables - Hot Food - Electric. Top shall be 20 gauge, 300 Series stainless steel, with body, undershelf and legs formed of heavy gauge 430 Series stainless steel. Top to have die-stamped openings measuring 12-1/16" x 20-1/16", with 8" deep galvanized liner. Each compartment to be insulated on all four sides and bottom with 1" thick fiberglass or equal, having thermal conductivity of 0.27 or less, with single phase standard. Each compartment to have 500 or 750 watt dome-type element fitted inside, above warming compartment. Wired to operate on 120, 208 or 240 volt, single or 3-phase. AC current, as ordered. Each section to be controlled by infinite switch. Permanently wired, 6' long cord with plug provided. Units to be furnished with poly carbonate carving board measuring 7" x 1/2" thick with 18 gauge stainless steel support base and die-stamped brackets. Portable units to have NSF listed casters, 5" diameter, rubber, swivel-type, two with locks, all non-marking tires, with 9"L pusher bar attached to end panel on operator's right.

"***P***" - prefix on model number denotes portable unit.

Aerohot

AEROHOT STEAMTABLES
HOT FOOD UNITS - ELECTRIC

- ❑ ***E302*** 2 top openings
- ❑ ***E303*** 3 top openings
- ❑ ***E304*** 4 top openings
- ❑ ***E305*** 5 top openings

LEGEND
▲ - ELECTRICAL CONNECTION
"*P*" = prefix on model number denotes portable unit

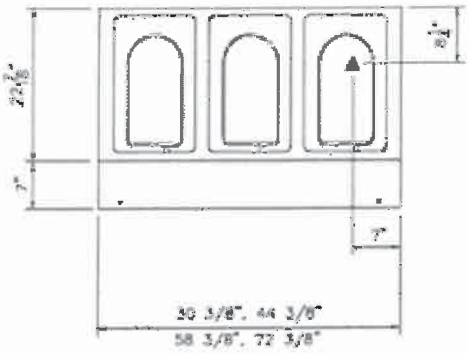

TOP VIEW

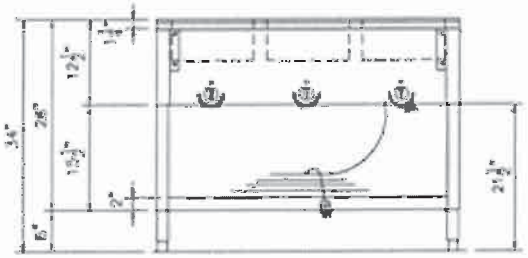

FRONT VIEW

RIGHT SIDE VIEW

DIMENSIONS:

Freight Class: 85

Model	Length		Width		Height		Top Openings	Cube ft. crated	Weight	
	in.	cm	in.	cm	in.	cm			lbs.	kg
E302/EP302	30-3/8	77.2	22-7/16	57.1	34	86.4	2	23.4	81/90	36.8/40.9
E303/EP303	44-3/8	112.8	22-7/16	57.1	34	86.4	3	32.5	107/114	48.6/51.8
E304/EP304	58-3/8	148.3	22-7/16	57.1	34	86.4	4	41.5	138/144	62.7/65.5
E305/EP305	72-3/8	183.9	22-7/16	57.1	34	86.4	5	50.5	165/172	75.0/78.2

ELECTRICAL SPECIFICATIONS:

Model	120 Volt - 500 watt elements			208 Volt - 750 watt elements			240 Volt - 750 watt elements		
	Watts	Amps	NEMA	Watts	Amps	NEMA	Watts	Amps	NEMA
E302/EP302	1000	8.3	5-15	1500	7.2	6-20	1500	6.3	6-20
E303/EP303	1500	12.5	5-15	2250	10.8	6-20	2250	9.4	6-20
E304/EP304	2000	16.7	L5-30	3000	14.4	6-20	3000	12.5	6-20
E305/EP305	2500	20.8	L5-30	3750	18.0	L6-30	3750	15.6	6-20

Cord and NEMA plug included.

"Your Solutions Partner"

DUKE MANUFACTURING CO.
2305 N. Broadway
St. Louis, MO 63102

800.735.3853 Toll Free
314.231.1130 In Missouri
314.231.5074 Fax
www.dukemfg.com

01/07

Printed in U.S.A.

Specifications subject to change

©2007, Duke Manufacturing Co.

PIPER CABINETS

Heated Cabinet/Proofer

Aluminum, Non-Insulated & Insulated

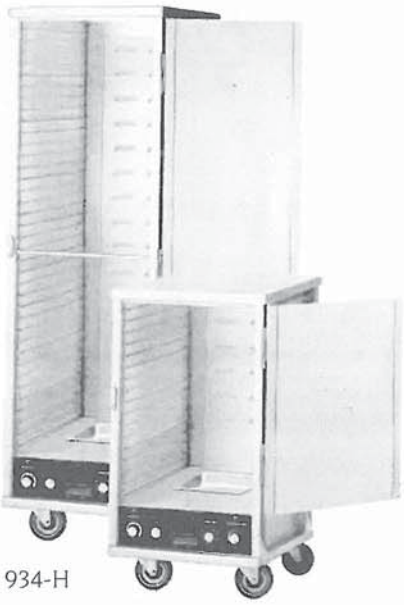

934-H

915-H

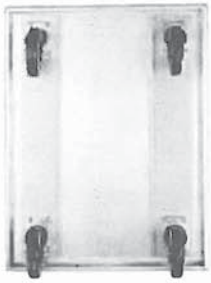

PIPER'S SUPERIOR FOUNDATION

Featured on our toughest racks: Two 14 gauge aluminized steel reinforcing channels support our .125" thick aluminum bottom panel. The edges are formed and rolled to create a built-in bumper andheavy duty plate casters make this the strongest foundation in the industry.

JOB_____ ITEM # _____ QTY # _____

MODEL NUMBER

- ❑ 915-H
- ❑ 934-H
- ❑ 934-H-LD
- ❑ 1034-LD
- ❑ 1015 (Insulated)
- ❑ 1034 (Insulated)

DIMENSIONS

- 915-H - 40-3/4"H x 21-1/2"W x 31"D
- 934-H - 68-3/4"H x 25W x 31"D
- 934-H-LD - 68-3/4"H x 21-1/2"W x 31"D
- 1034-LD - 68-3/4"H x 21-1/2"W x 31"D
- 1015 (Insulated) - 40-3/4"H x 21-1/2"W x 31"D
- 1034 (Insulated) - 68-3/4"H x 21-1/2"W x 31"D

Piper's aluminum Heated Cabinets /Proofers are designed with features to make your operation efficient. Controls can be easily accessed at the front of the Cabinet without opening the doors and the entire heater unit can be removed for cleaning and maintenance.

STANDARD FEATURES

- Base is a solid bottom constructed of .125" aluminum, rolled edge base acts as a built-in bumper
- Two 14-gauge aluminized steel reinforcing channels attach the casters and support the bottom panel
- Frame consist of four extruded channels 1-1/2" x 5/8" x .094" aluminum. Corners have .190 channel supports for reinforcement
- Double pan top constructed of two .080" thick aluminum panels, fully welded corners
- Glides are channels spaced on 1-1/2" centers with 5/8" ledge, .090 thick extruded aluminum continuously welded to the frame
- Door panel is .125" PVC coated aluminum attached to cabinet with bakery hinges, 270 degree door swing with card clip
- Back panel is .080" aluminum fully welded with removable multiple louvered vent stack
- 1/2" extruded aluminum tie bar keeps cabinet square
- 16-gauge stainless steel positive gravity latch is provided to keep door closed during transport
- Stainless steel side door latch holds door open
- One inch insulation surround the cabinet (Insulated models only)
- Card clip, easy identification of cabinet content when door is closed

HEAT SYSTEM

- Individual heat and food moisture controls
- Digital read-out for accuracy
- Stainless steel 1 gallon water pan
- Unit removable for easy cleaning & maintenance
- 60 minute timer
- 120 volt, 12.5 AMP, 1500 Watts

HEAVY-DUTY CASTERS

- 5" diameter x 1/1/4" wide swivel sealed wheels, two with brakes
- 350 lb. capacity
- Maximum resistance to chemicals, acids, bases, alcohol, water and steam
- Maximum low temperature flexibility or superior performance even in freezing temperatures

COMMON OPTIONS

- Lexan full-view door
- Push handle
- Dutch doors
- Personalized embossment
- See reverse side for additional options

WARRANTY

- One year parts and labor. Warranty is detailed on inside front cover of the price list.

SPEC J-6

PIPER PRODUCTS
BUILT TO LAST
www.piperonline.net
300 S. 84th Avenue
Wausau, WI 54401
Phone: 800-544-3057
Fax: 715-842-3125

PIPER CABINETS

Heated Cabinet/Proofer

Aluminum, Non-Insulated & Insulated

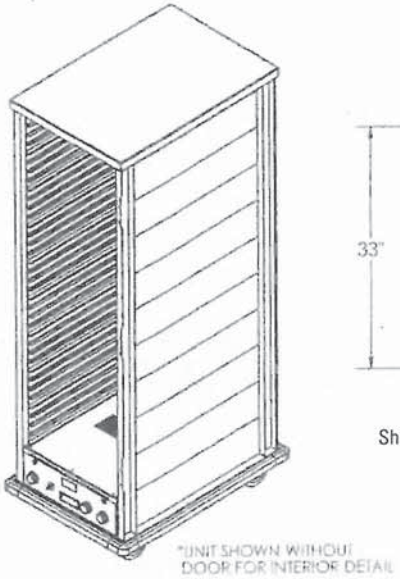

Glides are channels spaced on 1-1/2" centers with 5/8" ledge

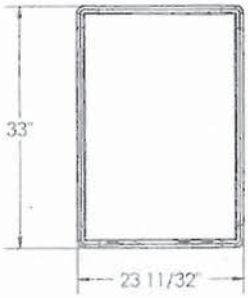

Shown with optional Bumper

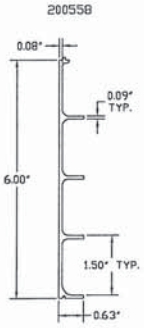

Glides

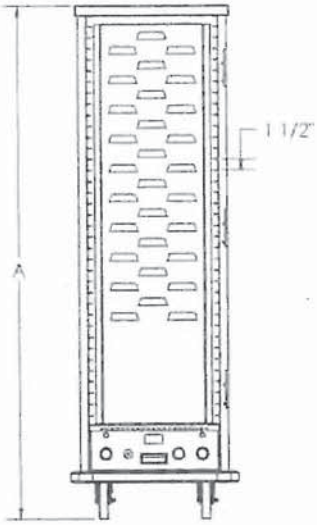

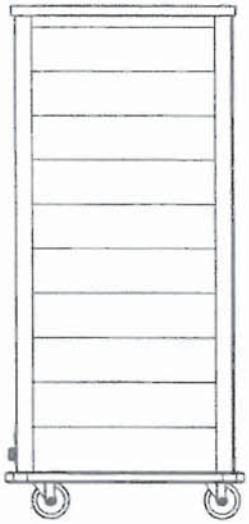

Model #	Description	(A) Height	Width	Depth	Channel Spacing	18x26 Pan Capacity	Ship Wt.(lbs)	Shipping Class
NON-INSULATED								
915-H	half size	40-3/4"	21-1/2"	31"	1-1/2"	15	140	100
934-H	full size	68-3/4"	21-1/2"	31"	1-1/2"	34	190	100
INSULATED								
1015	half size	40-3/4"	21-1/2"	31"	1-1/2"	15	160	100
1034	full size	68-3/4"	21-1/2"	31"	1-1/2"	34	260	100

All models 120 volt, 12.5 APM, 1500 watts

TEMPERATURE PROFILE

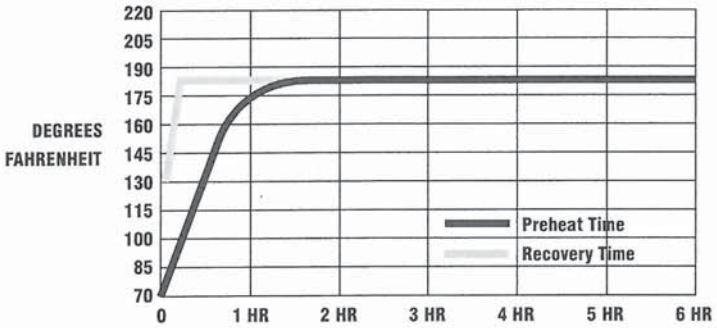

OPTIONS / ACCESSORIES

- ❑ (LD) Lexan full-view door
- ❑ (DD) Dutch door, only available on 941 units
- ❑ (CH) Chest handles, set of 2
- ❑ (EMB) Personalized embossment, 12 letters per line
- ❑ (PH) Push handle
- ❑ (I) Insulating transport cabinet
- ❑ (B) Set of 4 non-marking rubber corner bumpers
- ❑ (PB) Full perimeter non-marking bumper (Add 2" to overall width and depth)
- ❑ (WB) Wheel brakes, set of 2
- ❑ (5x2) Heavy-duty casters, set of 4
- ❑ (CP) Correctional package, includes welded casters and hole in door latch for paddlelock
- ❑ (CHT-2) Canned Heat Tray Insert
- ❑ (Y4) Polyurethane 4" casters (set of 4)
- ❑ (Y5) Polyurethane 5" casters (set of 4)
- ❑ (FL) Floor Lock

J-6 SPEC

PIPER PRODUCTS
BUILT TO LAST
www.piperonline.net
300 S. 84th Avenue
Wausau, WI 54401
Phone: 800-544-3057
Fax: 715-842-3125

LIMITED WARRANTY: PIPER PRODUCTS warrants to the original purchaser parts and labor for a period of twelve (12) months from the date of purchase. See manufacturer's complete warranty for details.

It is our policy to build equipment which is design certified by companies that have been accredited at the Federal Level by the Occupational Safety and Health Agency (OSHA) and ANSI as a National Recognized Testing Laboratory. These companies include CSA International, Underwriters Laboratories, and the National Sanitation Foundation. However, a continuing program of product improvement makes it necessary to submit new models to the agencies as they are developed. Consequently, all models may not bear the appropriate labels at all times.

We reserve the right to change specifications and product design without notice. Such revisions do not entitle buyer to corresponding changes, improvements, additions or replacements for previously purchased equipment. Information is not for design purposes.

Star Manufacturing International, Inc.

Ultra-Max® Throttling Thermostat Gas Griddles

ULTRA-MAX® THROTTLING THERMOSTAT GAS GRIDDLES

Models 824T, 836T, 848T, 860T & 872T

Features/Benefits:

- ★ Thermostatically controlled with a throttling thermostat control from 150° to 450°F provides accurate temperature control of +/- 20 degrees of set point.
- ★ Unique internal plate sensor accurately measures the temperature of the griddle plate 3/16" from the cooking surface for instant response to surface temperature change and fast recovery.
- ★ Available in 24", 36", 48", 60" and 72" widths to meet your space and volume requirements.
- ★ Ultra-Max high capacity 24" deep cooking surface is ideal for high volume operations.
- ★ Highly polished 1" thick steel plate for superior heat distribution, fast recovery and energy efficient operation.
- ★ Custom designed steel 30,000 BTU burner every 12" of cooking surface provides superior cooking performance.
- ★ Heavy-duty construction with all-weld body construction and stainless steel front, side panels, bull nose and splash guard.
- ★ "Euro-style" design with stylishly curved, ergonomically advanced front panel providing easy access and viewing of controls.
- ★ Standing pilot light for consistent performance.
- ★ Spatula wide 3-1/2" front grease trough and grease chute for easier cleaning.
- ★ Large 6 quart stainless steel grease drawer (2 drawers on 50" and 72" models).
- ★ Extra-heavy 4" adjustable legs to fit your countertop needs.
- ★ Floor model stands available for free standing unit. Optional casters available.

848T

836T
Shown with Optional Floor Stand

Applications:

Ultra-Max Throttling Thermostat gas Griddles will exceed your food service operations expectations. Designed for high performance and reliability. Ultra-Max griddles will provide years of trouble free operations.

Construction:

Ultra-Max thermostatically controlled griddles feature 1" thick highly polished steel griddle plate with 5" tapered stainless steel splash guard and 3-1/2" wide front access grease trough with 6 quart grease drawer capacity. Includes a 30,000 BTU aluminized burner every 12" of width controlled by throttling control valve with standing pilot light, 3/4" N.P.T. male gas connection with convertible pressure regulator, and 4" adjustable legs.

Warranty:

Ultra-Max gas griddles are covered by Star's one year parts and labor warranty.

GAS-FIRED c UL us LISTED

Star Manufacturing International Inc. - 10 Sunnen Drive - P.O. Box 430129 - St. Louis, MO 63143-3800
Phone: (800) 264-7827 - FAX: (800) 264-6666 - www.star-mfg.com

S203/1041

Star Manufacturing International, Inc.

Ultra-Max® Throttling Thermostat Gas Griddles

ULTRA-MAX® THROTTLING THERMOSTAT GAS GRIDDLES

Models 824T, 836T, 848T, 860T & 872T

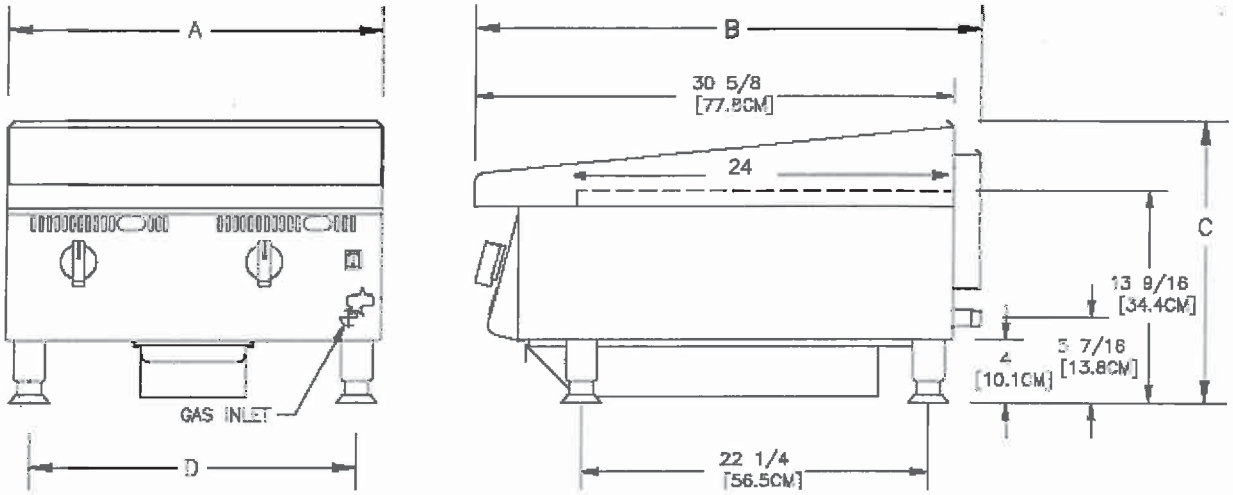

Specifications

Model No.	Dimensions (A) Width Inches	(B) Depth Inches	(C) Height Inches	(D) Leg Width Inches	No. Controls	BTU	Grid Area	Plate Thickness	Approximate Weight Installed	Shipping
824T	24" (61 cm)	32-3/8" (82.2 cm)	18" (45.7 cm)	21" (53.34)	2	60,000	573 sq. in. (3,697sq cm)	1" (2.54 cm)	220 lbs. (99.7 kg)	246 lbs. (111.5 kg)
836T	36" (91.4 cm)	32-3/8" (82.2 cm)	18" (45.7 cm)	33" (83.8)	3	90,000	860 sq. in. (5,545 sq cm)	1" (2.54 cm)	330 lbs. (149.5 kg)	369 lbs. (167.2 kg)
848T	48" (121.9cm)	32-3/8" (82.2 cm)	18" (45.7 cm)	45" (114.3)	4	120,000	1146 sq. in. (7,394 sq cm)	1" (2.54 cm)	440 lbs. (199.4 kg)	492 lbs. (222.9 kg)
860T	60" (152.4 cm)	32-3/8" (82.2 cm)	18" (45.7 cm	57" (144.78)	5	150,000	1433 sq. in. (9,242 sq cm)	1" (2.54 cm)	550 lbs. (249.2 kg)	615 lbs. (278.7 kg)
872T	72" (182.9 cm)	32-3/8" (82.2 cm)	18" (45.7 cm)	69" (175.3)	6	180,000	1719 sq. in. (11,091 sq cm)	1" (2.54 cm)	660 lbs. (299.0 kg)	738 lbs. (334.4 kg)

Typical Specifications

Gas griddles are constructed of stainless steel, valve knobs are protected by a stainless steel bull nose front. Griddle plate is 1" (2.54 cm) thick highly polished steel plate with a 5" (12.7 cm) high tapered wrap-around stainless steel splash guard. Unit has a 3-1/2" (8.3 cm) wide front grease trough with with grease chute and a 6 qt. (5.68L) capacity stainless steel grease drawer. Models 860T and 872T house two each 6 quart grease drawers. Units are equipped with a 30,000 BTU aluminized steel burner for every 12" (30.5 cm) of width and are controlled by a throttling control valve with standing pilot light, 3/4" N.P.T. male gas connection with convertible pressure regulator. Griddles are supplied with 4" (10.2 cm) high stainless steel legs that have a 1-5/8" (4.5cm) adjustment. Units are approved for installation within 6" (15.2 cm) of combustible surfaces and are UL Gas Fired Listed for U.S. and Canada and UL classified to NSF Standard 4 Sanitation. Printed in the U.S.A.

Due to periodic changes in designs, methods, procedures, policies and regulations, the specifications contained in this sheet are subject to change without notice. While Star Manufacturing exercises good faith efforts to provide information that is accurate, we are not responsible for errors or omissions in information provided or conclusions reached as a result of using the specifications. By using the information provided, the user assumes all risks in connection with such use.

Star Manufacturing International Inc. - 10 Sunnen Drive - P.O. Box 430129 - St. Louis, MO 63143-3800
Phone: (800) 264-7827 - FAX: (800) 264-6666 - www.star-mfg.com

26 34 54

3 H.P. Model 300

Salvajor®

JOB: _____ **Item No.:** _____

FOOD WASTE DISPOSER SPECIFICATIONS

CORROSION RESISTANT BODY
Permanent molded from heat treated aluminum alloy.

TEFLON LIP WATER SEAL
Protects the motor from damage by water.

TAPERED ROLLER BEARING
Provides longer motor life, quiet operation and shock absorbing.

WATER COOLED MOTOR
Provides maximum efficiency and longer life.

QUIET OPERATION
Extra thick rubber mounting adaptor and drain outlet isolates sound and eliminates vibration.

WASTE MIXING CHAMBER
Extra large to ensure proper mixture of water to waste.

NEMA 4 Watertight Controls

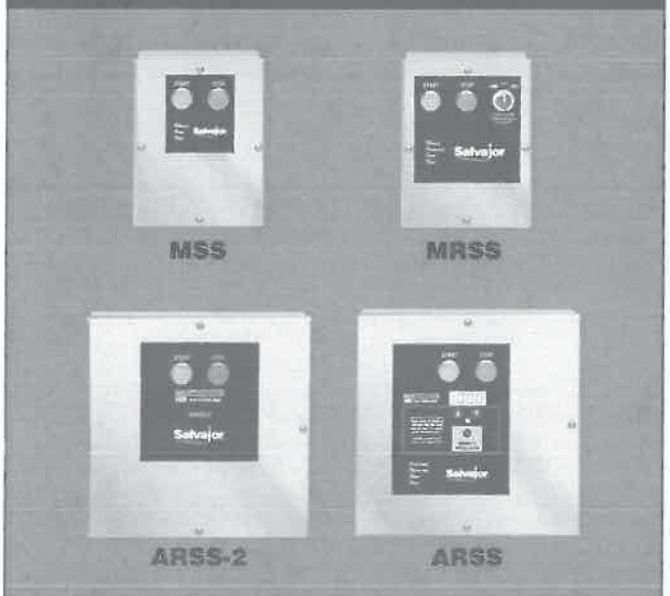

Optional Line Disconnect (LD) available on MSS, MRSS, & ARSS

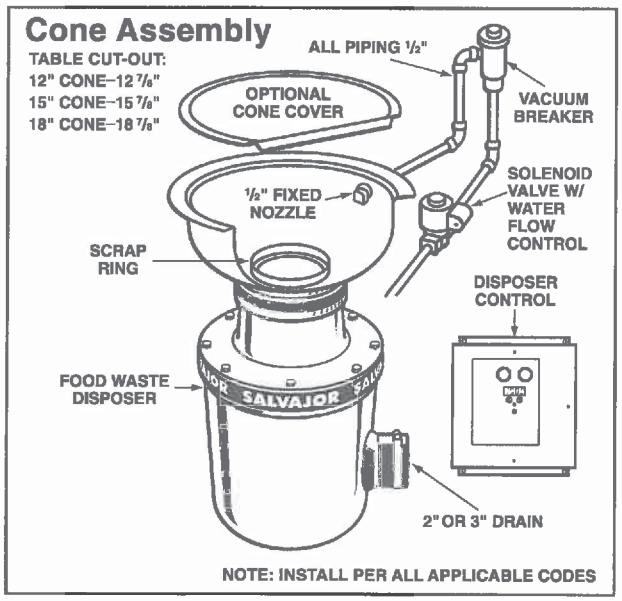

FULL LOAD AMPS			
☐	208 Volts	3 Phase	8.8 Amps
☐	230 Volts	3 Phase	8.0 Amps
☐	460 Volts	3 Phase	4.0 Amps

◆ SPECIFY EXACT OPERATING VOLTAGE ◆

Salvajor Model 300

Food Waste Disposer 3 HP – 3 Phase

D E T A I L S A N D D I M E N S I O N S

SPECIFICATIONS:

MOUNTING – Rubber adaptor above grind chamber and rubber drain outlet isolates sound and eliminates vibration. No metal to metal contact.

EXTERIOR HOUSING – Permanent molded from heat treated, corrosion resistant aluminum alloy then computer machined to a smooth polished finish. Paint free.

SHREDDER – 9 inch diameter, machined high strength, wear resistant hardened carbide alloy.

ROTOR – 9 inch diameter with 4 cutter bars, machined high strength, wear resistant hardened carbide alloy.

MOTOR – 3 HP totally enclosed. Fan cooled and water cooled for efficiency and longer life.
Built-in manual reset thermal overload protection.
Available in 208-230/460 volts, 60 cycle, 3 phase.

BEARINGS – Tapered roller (top)
Sealed ball (bottom)

SEAL – *Teflon Lip Water Seal.*

WATER REQUIREMENT – 8 gallons of cold water per minute.

WASTE OUTLET – Rubber drain accepts 2" piping or 3" piping by removing drain insert.

DUAL DIRECTION GRINDING – Designed to operate in either direction. Direction of rotation can be controlled when installed with automatic reversing controls. ***Reversing rotation can double cutting teeth life.***

LEG SUPPORT – Single leg, adjustable.

ASSEMBLIES: **(See Specification Sheet)**
- **CA – Cone Assembly with 12", 15" or 18" Cone**
- **SA – Sink Assembly with 3½" or 6½" Sink Collar**

DISPOSER CONTROLS: **(See Specification Sheet)**
- **MSS: (Non Reversing)**
- **MRSS: (Manual Reversing)**
- **ARSS-2: (Automatic Reversing)**
- **ARSS: (Automatic Reversing)**

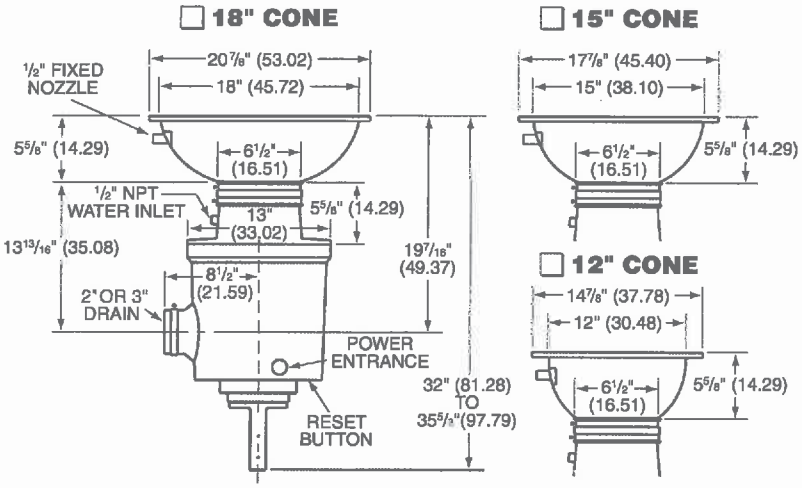

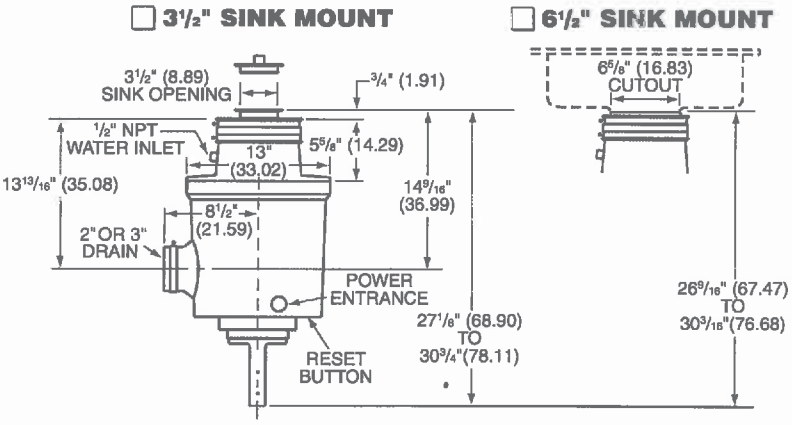

NOTE: Dimensions in parenthesis are in centimeters
(Specifications subject to change without notice)
Current specification details may be found online at www.salvajor.com

SAMPLE SPECIFICATION

300-CA-18		ARSS	(230/60/3)
Model	Cone Size	Disposer Control	Electrical Specs.
	Assembly		

◆ **SPECIFY EXACT OPERATING VOLTAGE** ◆

The Salvajor Company 4530 East 75th Terrace Kansas City, Missouri 64132-2081, USA
1-800-SALVAJOR (816) 363-1030 FAX: 1-800-832-9373
www.salvajor.com Email: sales@salvajor.com service@salvajor.com

Manufacturers of Commercial Food Waste Disposing Systems since 1944

Printed in USA
Form No.S300-9-BH

Champion®

The Dishwashing Machine Specialists

Project _____

Item No. _____

Quantity _____

VERSA-CLEAN DOOR-TYPE

VERSA-CLEAN

DH2000 High Temperature
Door-type
Dishwashing Machine

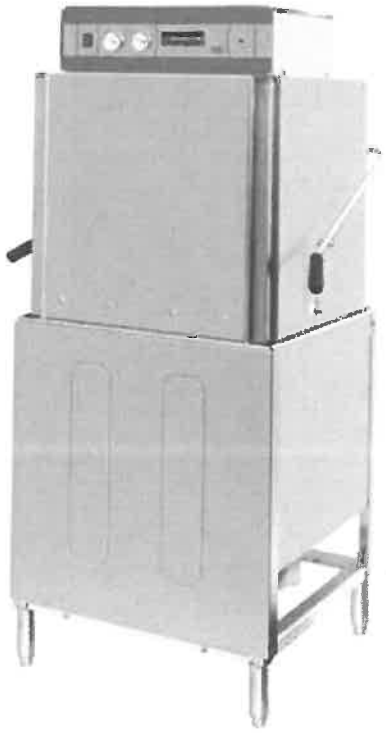

STANDARD FEATURES

- **ENERGY STAR® Qualified**
- **NEW Exclusive** Built-in booster configured for both 40° and 70° Rise
- **NEW Exclusive** Field convertible to single or three phase, 208 or 240 volt, corner or straight through operation
- Rinse Sentry – ensures 180°F final rinse
- Auto start – starts unit when doors are closed
- High temperature
- Single point connection
- High efficiency 1 HP pump
- 55 racks per hour
- Self draining pump
- Automatic tank fill
- Detergent/chemical connections
- Interchangeable upper and lower arm
- Top mounted splash proof controls
- Automatic drain valve
- Vent fan control
- Pressure regulating valve
- Low water tank heat protection

OPTIONS & ACCESSORIES

☐ Drain Tempering Kit

☐ Side Panels

SPECIFIER STATEMENT

Specified unit will be Champion model Versa-Clean, DH2000 high temperature door-type dishwashing machine.

Features top mounted splash proof controls, Rinse Sentry, Auto start, interchangeable stainless steel wash and rinse arms, 55 racks/hr., .90 US gals/rack.

1 year parts and labor warranty.

Champion Industries, Inc.
3765 Champion Blvd, Winston-Salem, NC 27105
Tel: 336/661-1556 Fax: 336/661-1979
www.championindustries.com

(1M) 12/10 Printed in U.S.A.

VERSA-CLEAN DOOR-TYPE

VERSA-CLEAN

DH2000 High Temperature
Door-type
Dishwashing Machine

VERSA-CLEAN

Champion®
The Dishwashing Machine Specialists

Shipping weight crated: 300 lbs.

Dimensions shown in inches

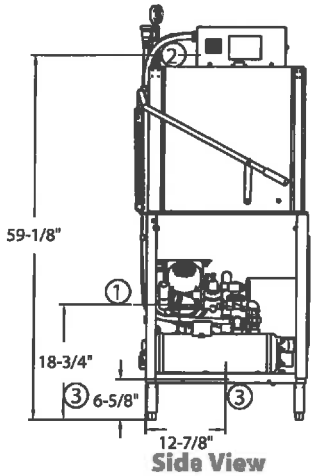

Side View

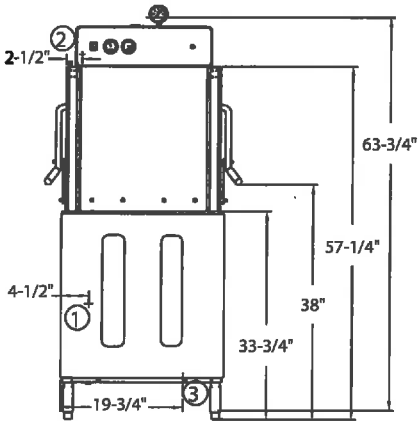

Front View

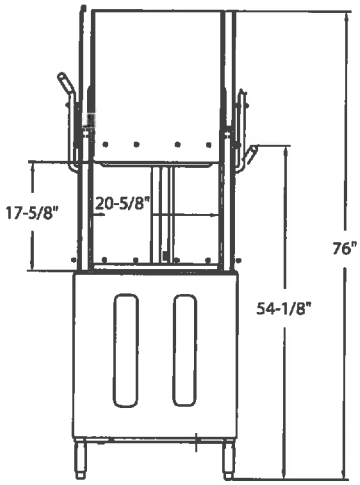

Door Clearance

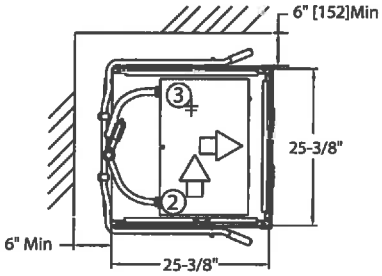

Corner Configuration

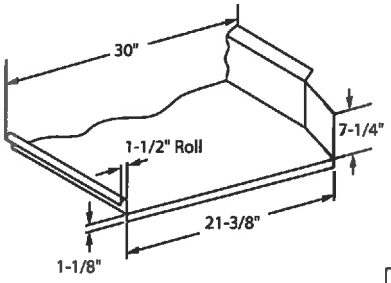

Typical Table Construction

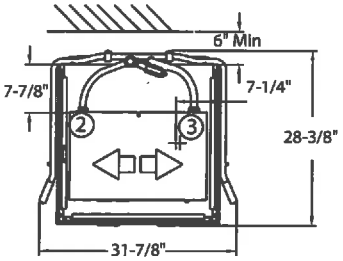

Straight Through

SPECIFICATIONS

Capacities	
Racks per hr. (NSF rated)	55
Wash tank (gal.)	9.5
Motor horsepower	1 HP
Water consumption	
Gal. per hr. (max. use)	49.5
Gal. per rack	0.9
Temperature °F	
Wash	150
Rinse	180
Heating	
Tank heat, electric	5.2 kW
Electric Booster	7.5 kW
Time cycle in seconds	
Wash	40
Dwell	1
Rinse	12
Sanitary Dwell	7
Total cycle	60

Utilities

1	**Water** 3/4" NPT Flow pressure 20-25 PSI Hot water 140°F (82°C)
2	**Electrical 40°/70° Booster** **A.** 208-220/60/1 (See Box) **B.** 208-220/60/3 (See Box)
3	**Drain** **A.** 2" OD Connection Gravity flow, 15 GRM max flow

Electric 40°/70° Rise Booster

Voltage	Rated Amps	Minimum Supply Ckt. Conductor Ampacity	Maximum Overcurrent Protective Device
208/60/1	65	80	80
240/60/1	75	80	80
208/60/3	40	50	50
240/60/3	45	50	50

Warning: Plumbing, electrical connections should be made by qualified personnel who will observe all the applicable plumbing, sanitary and safety codes and the National Electrical Code.

'USGBC' and related logo is a trademark owned by the U.S. Green Building Council and is used by permission.
Due to an ongoing value analysis program at Champion, specifications contained in this catalog are subject to change without notice.

Champion Industries, Inc., 3765 Champion Blvd, NC 27105 • 336/661-1556 • Fax: 336/661-1979 • www.championindustries.com

3CS, FR and Therma-Corn Installation and Operating Manual

I & W #07.05.004.00

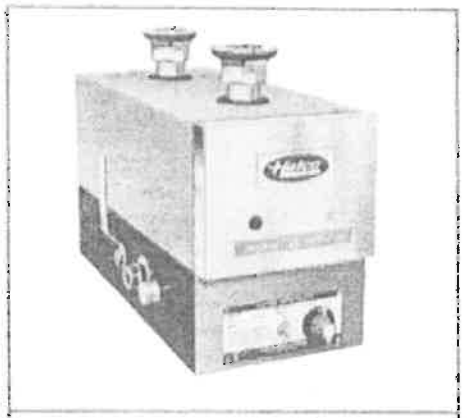

Table of Contents

	Page No.
GENERAL	1
MODEL DESCRIPTION	1
3CS	1
FR	1
Therma-Corn FRC-I and FRC-II	1
SPECIFICATIONS	2
Dimensions 3CS and FR	2
FR Sizing Information	3
Therma-Corn	3
CIRCUIT BREAKER AND FUSE SIZING CHART	4
PLUMBING	4
ELECTRICAL	5
OPERATING PROCEDURE	6
Start-Up	6
Draining	10
SAFETY PRECAUTIONS	11
DRAINING HEATER FOR SERVICE OR PROTECTION FROM FREEZING TEMPERATURES	11
OPTIONAL ACCESSORIES	11

GENERAL

Hatco FR and 3CS heaters are designed to supply temperature controlled water to a holding vessel (sink or tank) above the heater. Water flows from the holding vessel into the heater directly into the first reservoir. This first reservoir acts as a soil collection sump. Debris that could affect the heating element operation settles out in the sump to be drained away later. The debris free water flows into the second reservoir in which the heating elements are mounted. The water is heated and returned to the holding vessel above.

This manual provides the installation and operation instructions for Hatco FR and 3CS heaters and Therma-Corn models FRC-I and FRC-II.

We recommend all installation and operating instructions and safety precautions appearing in this manual be read prior to installation and operation.

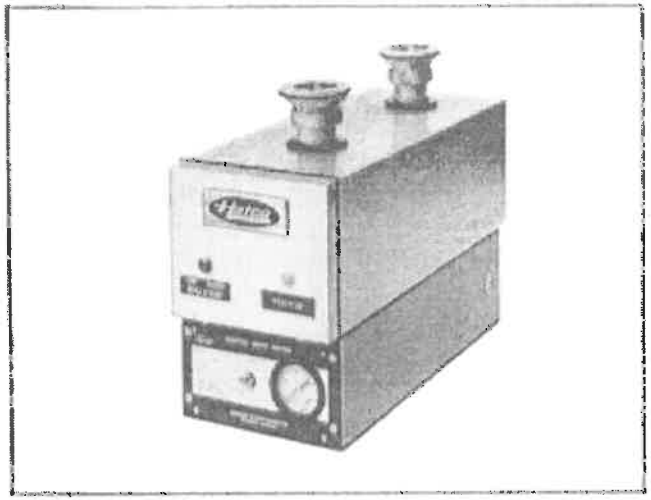

Figure 1. 3CS Heater

Safety precautions preceded in this manual by the words **WARNING** or **CAUTION** printed in bold face are important. Warning means there is the possibility of personal injury to yourself or others. Caution means there is the possibility of damage to the unit.

MODEL DESCRIPTION

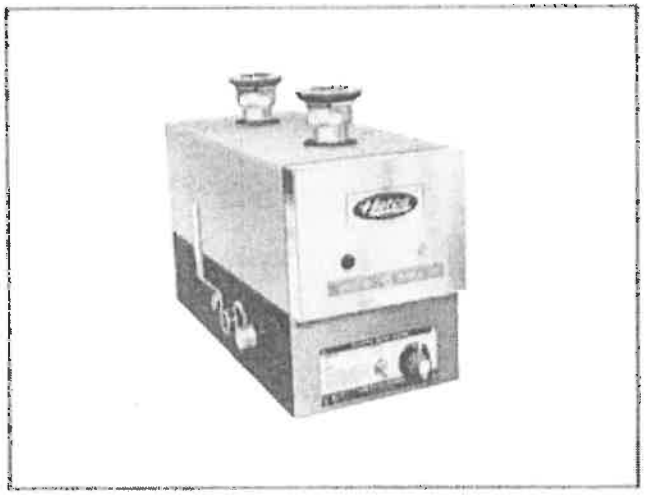

Figure 2. FR Heater

3CS

The Hatco 3CS model heaters are specifically designed for use with any manual dishwashing operation. The 3CS heater maintains sanitizing rinse water of 180°F.

FR

The Hatco FR model heaters are designed to be used with a Bain-Marie or food reconstitutor, such as the Hatco Therma-Corn, to heat or hold foods at temperatures between 140°F and 190°F. Holding temperature is controlled by an adjustable thermostat.

THERMA-CORN, FRC-I, and FRC-II

The Hatco Therma-Corn, models FRC-I and FRC-II use a Hatco FR-3 heater, which is supplied with an electrical cord and plug.

SPECIFICATIONS
DIMENSIONS
3CS AND FR

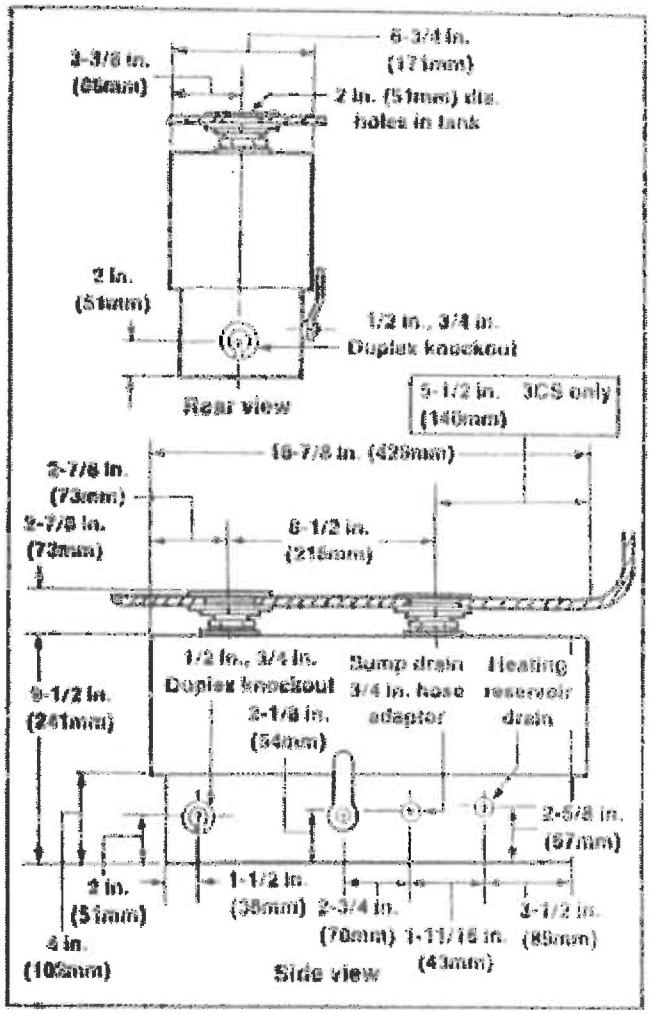

Figure 3. One and Two Element Style

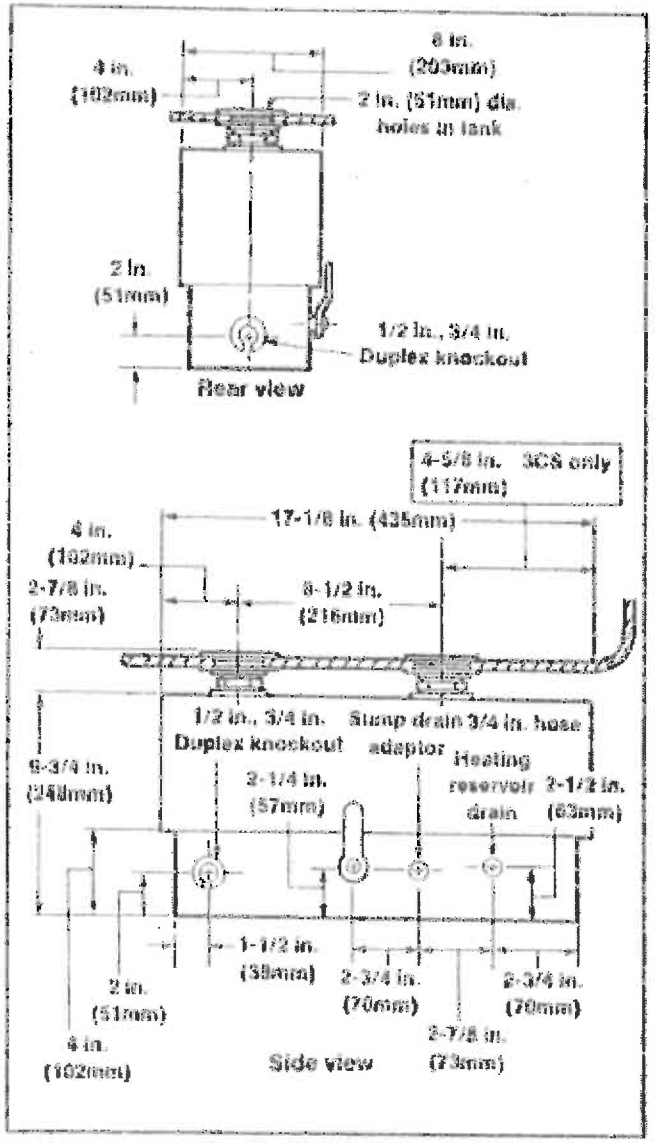

Figure 4. Three Element Style (Balanced 3 phase)

FR SIZING INFORMATION

For a Bain-Marie or steam table:
750 watts per square foot of vessel top.

For a food reconstitutor:
2000 watts per square foot of vessel top.

NOTE

Use one FR for a Bain-Marie up to 6 feet long. Over 6 feet, a maximum of two FR heaters are required.

See Figure 5. The FR should be positioned with no more than 3 feet on either side when mounted in holding vessel. A perforated water baffle must be used. (Not supplied by factory.)

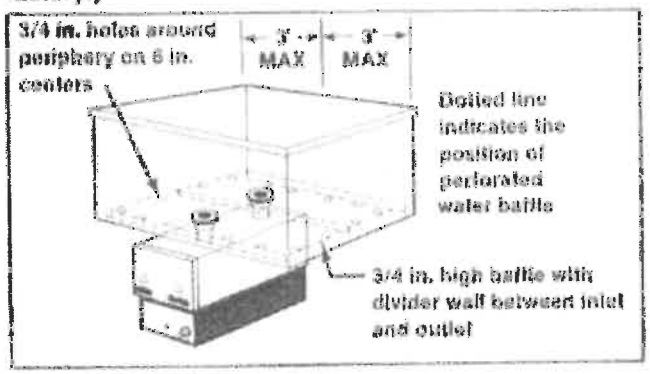

Figure 5. FR With Water Baffle

THERMA-CORN

The Therma-Corn is completely assembled and prewired at the factory. The Therma-Corn may be mounted to an accessory stand or inserted into a counter top.

See Figure 6. Adjustments may be made to the accessory stand by using the thumb screws for leveling and adjusting height.

See Figure 7. When installing the Therma-Corn into a counter top the opening must be 11-3/4 in. wide by 19-3/4 in. deep.

There must be at least a 30 in. clearance below the counter top to accommodate the tank, cooker and drain assembly.

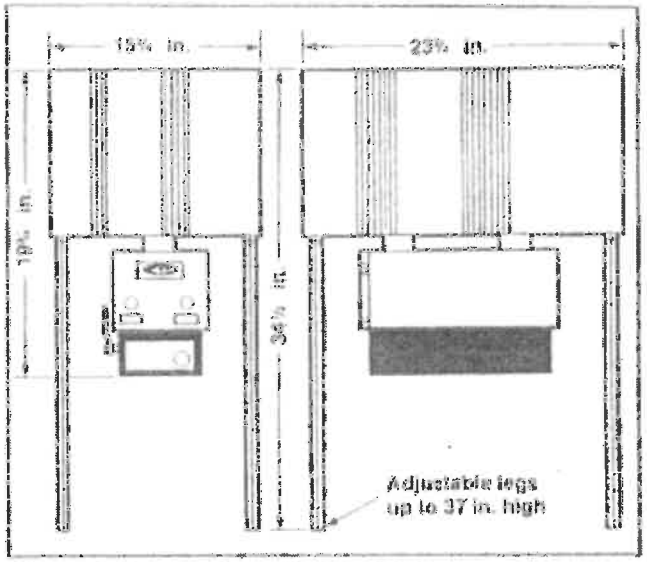

Figure 6. Therma-Corn Model FRC-II

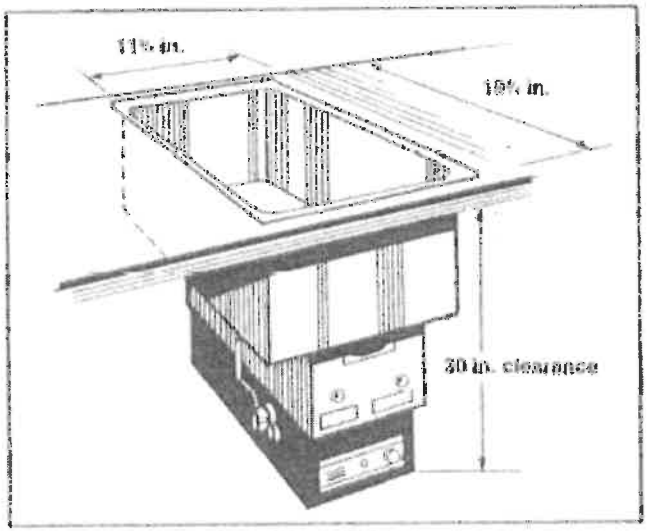

Figure 7. Therma-Corn Model FRC-I

CIRCUIT BREAKER AND FUSE SIZING CHART

3CS HEATERS

208 Volts KW Rating	Phase	Size Amps	Wire Size	Fuse or Circuit Breaker
3	1	14.5	12	20
4.5	1	22	10	30
6	1	29	8	40
6	3*	25	10	40
6.8	3(Bal.)	16.8	10	30
9.0	1	43	4	60
9.0	3*	37	6	50
9.0	3(Bal.)	25	10	40

240 Volts KW Rating	Phase	Amps	Wire Size	Fuse or Circuit Breaker
3	1	12.5	12	20
4.5	1	19	10	30
6	1	25	10	40
6	3*	22	10	30
6.0	3(Bal.)	14.4	12	20
9.0	1	38	6	50
9.0	3*	33	8	40
9.0	3(Bal.)	22	10	30

480 Volts KW Rating	Phase	Amps	Wire Size	Fuse or Circuit Breaker
3	1	6.3	14	15
4.5	1	9.4	14	15
6	1	12.5	12	20
6	3*	10.8	14	15
6.0	3(Bal.)	7.2	14	15
9.0	1	18.8	10	30
9.0	3*	16.2	12	20
9.0	3(Bal.)	10.8	14	15

*Open Delta—standard construction (Amperage higher than Balanced 3 phase)

Install a fused disconnect switch or circuit breaker sized according to the table. The wiring from the switch to the Halco 3CS sink heater should be in accordance with local electrical requirements.

FR HEATERS

208 Volts KW Rating	Phase	Amps	Wire Size AWG	Fuse or Circuit Breaker
3.3	1	16	12	20
4.8	1	23	10	30
6.3	1	30	8	40
6.3	3*	25	8	40
7.1	3(Bal.)	19.7	10	30
9.3	1	45	4	60
9.3	3*	38	6	50
9.3	3(Bal.)	26.4	10	40

240 Volts KW Rating	Phase	Amps	Wire Size AWG	Fuse or Circuit Breaker
3.3	1	14	12	20
4.8	1	20	10	30
6.3	1	26	8	40
6.3	3*	22	10	30
6.3	3(Bal.)	15.6		
9.3	1	39	6	50
9.3	3*	33	8	40
9.3	3(Bal.)	23	10	30

*Open Delta—standard construction (Amperage higher than Balanced 3 phase)

Install a fused disconnect switch or circuit breaker sized according to the above table. The wiring from the switch to the Halco FR should be in accordance with local electrical requirements.

PLUMBING

A paper template with adhesive backing is shipped with the heater. The template is used for locating the position

of the holes needed for the sink strainers. The heater mounts to the sink strainers.

1. Expose the adhesive portion of the template. Stick the template to the bottom of the holding vessel with the notation "Front Cover" against the front inside wall of the holding vessel.
2. Center punch and drill a 3/4 in. pilot hole at each of the 2 center marks on the template.

NOTE

The pilot holes are for cutting larger holes with Greenlee cutters.

3. Remove template and cut a 2 in. diameter hole at each pilot hole using a standard #AV1755 Greenlee cutter.

NOTE

IF #AV1755 Greenlee cutter is not available, use a standard Greenlee 1-1/2 in. conduit cutter #506-6978, which is slightly under 2 in. diameter. File or ream holes as necessary to 2 in. diameter required for mounting sink strainers.

4. See Figure 8. In both of the 2 in. holes, install a male threaded sink strainer with a thin gasket between the strainer flange and the bottom of the holding vessel.
5. On the under side of the holding vessel at each strainer, install a thick gasket, then a thin metal or fiber washer and nut. Tighten nuts finger tight only at this time.
6. Attach the heater to the strainers using unions with 1-3/4 in. diameter rubber gaskets inside the connecting union nuts.

NOTE

Be sure gaskets do not crimp.

7. Tighten unions securely.
8. Tighten nuts on strainers securely.
9. Fill the holding vessel with water and check for installation leaks.

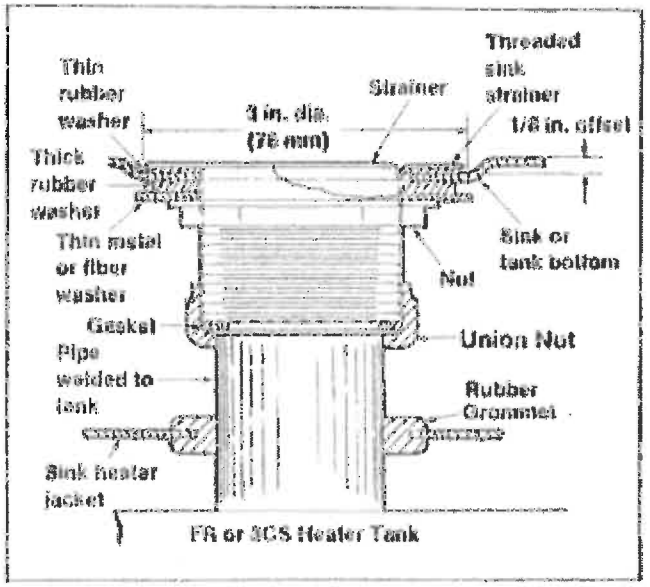

Figure 8. Installation Sink Strainer

CAUTION

Do not overtighten unions or nuts. Overtightening may cause leaks.

NOTE

A 3/4 in. hose or pipe may be connected to the heater sump drain and run to an open sight drain. The sump drain should not be permanently connected to the sanitary drain system. Check local plumbing code for proper drain installation.

ELECTRICAL

CAUTION

Do not turn on electrical current to the heater until the tank has been filled with water. Heating elements will burn out quickly if energized dry.

Conductors from a properly sized fused disconnect switch or circuit breaker must be wired to the Hatco 3CS or FR heater in accordance with local electrical codes.

Model FR-3 and FR-4 heaters may be supplied with an electrical cord and plug. These heaters must be plugged into an approved receptacle. For FR-3, NEMA 6-20R, for FR-4 NEMA 6-30R

WARNING

For proper electrical installation, conforming to local electrical codes, consult a licensed electrical contractor.

NOTE

See Circuit Breaker and Fuse Sizing Chart for wiring recommendations. Refer to the specification plate on the front of the heater for voltage requirements.

OPERATING PROCEDURE

START-UP

CAUTION

Do not turn on electrical current to the heater until the tank has been filled with water.

3CS Models

See Figure 9

1. Check that small pipe cap to the heating chamber drain is in place.
2. Close sump valve by operating the drain handle on the side of the heater.

NOTE

See Figure 9. Sump valve is closed when handle is vertical.

3. Fill the holding vessel with hot tap water to normal operating level.
4. Check that the fused disconnect switch or circuit breaker is on.

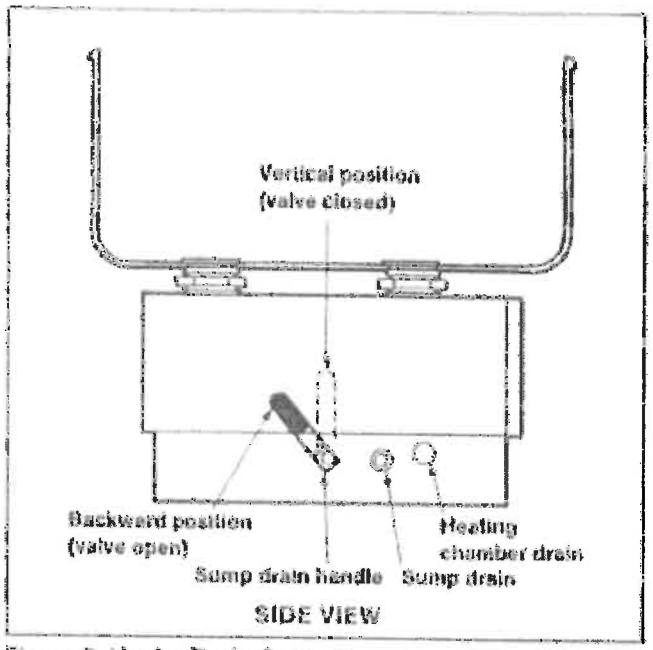

Figure 9. Heater Drain Controls

5. Turn power switch to "ON" position.
6. An optional amber light or indicating dial thermometer indicates when sanitizing temperature is reached.

NOTE

All Hatco heaters have an Energy Cut-Off switch (ECO) that will shut "OFF" the power if the unit should overheat.

If the Energy Cut-Off switch has activated a low water level may be the cause.

To reset 3CS heaters, fill to the proper water level. Turn the "OFF-ON" switch to "OFF" then "ON".

CAUTION

The ECO does not protect the heater when both reservoirs are drained.

FR Models
Bain-Marie Application

WATER TEMPERATURE CHART 750 WATTS PER SQUARE FOOT

6 INCH DEEP WATER

Temperature Water Heated To

Temperature Water at Start	70	80	90	100	110	120	130	140	150	160	170	180
	Minutes to Heat											
60	8	15	23	31	40	48	57	67	77	90	108	140
70		8	16	24	33	40	49	59	70	83	100	133
80			8	16	25	33	41	51	62	75	92	125
90				8	17	23	33	43	54	67	84	117
100					9	17	25	35	45	59	76	109
110						8	17	27	37	44	68	100
120							9	19	29	42	60	92
130								10	21	34	51	84
140									11	24	41	74
150										13	31	63
160											17	50
170												33

FR Models
Bain-Marie Application

WATER TEMPERATURE CHART 750 WATTS PER SQUARE FOOT

9 INCH DEEP WATER

Temperature Water Heated To

Temperature Water at Start	70	80	90	100	110	120	130	140	150	160	170	180
60	12	23	35	47	60	72	85	100	116	138	162	211
70		12	24	36	49	61	74	89	105	125	151	200
80			12	24	37	49	62	77	93	113	139	188
						Minutes to Heat						
90				12	25	34	50	65	81	101	127	176
100					13	25	38	53	69	89	115	164
110						12	25	40	56	66	102	151
120							13	28	44	64	90	139
130								15	31	51	77	126
140									16	36	62	111
150										20	46	95
160											26	75
170												49

FR Models
See Figure 9

1. Check that small pipe cap to the heating chamber drain is in place.

2. Close sump valve by operating the drain handle on the side of the heater.

NOTE

See Figure 9. Sump valve is closed when the handle is vertical.

3. Fill the holding vessel with hot tap water to normal operating level.

NOTE

For FR heaters rated 750 watts per square foot of tank area see WATER TEMPERATURE CHART for minutes to heat.

4. Check that the power supply cord is plugged into a proper receptacle (20 AMP for FR-3, 30 AMP for FR-4). Turn the toggle switch to the "On" position. The power "On" light will glow indicating power is supplied.

5. Set the water temperature control dial to the desired temperature. The "Water at Temperature" light will glow when water is at the control temperature.

NOTE

All Halco heaters have an Energy Cut-Off switch (ECO) that will shut "OFF" the power if the unit should overheat.

If the Energy Cut-Off switch has activated, a low water level may be the cause.

To reset, fill to the proper water level. Push the reset button on the front of the heater.

NOTE

The ECO does not protect the heater when both reservoirs are drained. The optional LWCO Relay disconnects power if water is drained.

Therma-Corn Models
See Figure 9

1. Check that small pipe cap to the heating chamber drain is in place.

2. Close sump valve by operating the drain handle on the side of the heater.

NOTE

See Figure 9. Sump valve is closed when the handle is vertical.

3. Fill the holding vessel with hot tap water to normal operating level.

4. Check that the power supply cord is plugged into a proper 20 AMP receptacle. Turn the toggle switch to the "On" position. The power "On" light will glow indicating power is supplied.

5. Set the water temperature control dial to the desired temperature. The "Water at Temperature" light will glow when water is at the control temperature.

NOTE

All Halco heaters have an Energy Cut-Off switch (ECO) that will shut "OFF" the power if the unit should overheat.

If the Energy Cut-Off switch has activated, a low water level may be the cause.

To reset, fill to the proper water level. Push the reset button on top of the heater above the front cover.

NOTE

The ECO does not protect the heater when both reservoirs are drained. The optional Low-Water Cut-Off (LWCO) Relay disconnects power to the heating elements if the heater is energized without water in the reservoirs.

Filling the vessel with water will reset the LWCO.

6. Fill the baskets with frozen corn and place in the preheated Therma-Corn.

Baskets have a capacity of up to 40 (3-1/2 in. cut) ears of corn each.

NOTE

Heat up time for 80 ears of corn is approximately 25 minutes. The thermostat should be set to hold the water at 150°F.

If cobs are removed too soon, corn will not have fully reconstituted and the kernels will be soft or mushy.

After emptying a basket, refill with forzen corn and place the basket in the rear of the Therma-Corn. This is important because the water flow in the Therma-Corn is from front to back.

DRAINING

3CS and FR

NOTE

The holding vessel should be drained through its own drain valve to discharge debris and water that remains in the heater. The sump must be drained after each use by placing the sump drain handle in the backward position.

CAUTION

Do not drain holding vessel with power on.

1. Turn toggle switch to "OFF" position.
2. Drain holding vessel. The sump drain handle on the side of the heater opens the sump valve and contents of the sump and the vessel above will be drained. The waste should lead to an open sight drain in a manner according to local plumbing code.

CAUTION

Periodic inspection should be made for lime buildup in tanks. Excessive amounts can affect unit performance.

If the heater is to be stored or shipped in freezing temperature, completely drain the reservoirs to prevent damage to the unit. See DRAINING HEATER FOR SERVICE OR PROTECTION FROM FREEZING TEMPERATURES.

Therma-Corn

The Hatco Therma-Corn must be drained and cleaned daily.

CAUTION

Do not drain heater with the power on. Unless the heater is equipped with a Low-Water Cut-Off Relay, element burn out will occur.

1. See Figure 9. Turn power switch to "OFF" and drain heater by placing the sump drain handle in the backward position.
2. Wipe visible deposits from the tank and false bottom. Close the drain valve by operating the drain handle.
3. Dissolve 3 tablespoons of Stera-Sheen (green label) in 1 gallon of hot water and pour into the holding vessel.
4. Refill the tank with hot water to one half inch above the false bottom and soak for at least 15 minutes.
5. Open the valve and drain the tank.
6. Remove the false bottom and rinse in clear water.
7. Place the rubber stopper in the rear opening and the special hose adaptor in the front opening of the tank. Flush with clear water for approximately 1 minute, then close the valve and replace the false bottom in the tank.

NOTE

The false bottom is stamped "BACK" for correct installation in the tank.

CAUTION

To protect the heater from damage, if the Therma-Corn is to be shipped or stored in freezing temperatures, or if it is necessary to drain the heater for servicing, follow the draining procedure under DRAINING HEATER FOR SERVICE OR PROTECTION FROM FREEZING.

SAFETY PRECAUTIONS

Do not turn on electrical current to the heater until the holding vessel has been filled with water. Unless the heater is equipped with a Low-Water Cut-Off, element burn out will occur.

For proper electrical installation, conforming to local electrical codes, consult a licensed electrical contractor.

Heaters supplied with an electrical cord and plug must be plugged into a 20 amp receptacle.

Drain holding vessel with power "Off" or element burn out could occur.

To prevent electrical shock never service the heater without first turning off the power at the fused disconnect switch, the circuit breaker, or by unplugging the power cord.

DRAINING HEATER FOR SERVICE OR PROTECTION FROM FREEZING TEMPERATURES SEE FIGURE 9

WARNING

To prevent electrical shock never service the heater without turning off the power at the fused disconnect switch or circuit breaker or by unplugging the power cord.

1. Turn toggle switch to "OFF" position.
2. Turn off the electrical power supply to the heater at the fused disconnect switch, the circuit breaker or by unplugging the power cord.
3. Drain the holding vessel and the sump by placing the sump drain handle on the side of the heater in a backward position.
4. With a catch pan ready, unscrew the pipe cap on the side of the heater to drain the heating element chamber.

NOTE

Heating element chamber holds from 2-1/2 up to 4-1/2 quarts of water, depending upon model.

OPTIONAL ACCESSORIES

3CS TEMPERATURE MONITOR

This indicating dial thermometer indicates when sanitizing temperature is reached.

3CS TEMPERATURE LIGHT

When water temperature is raised to the desired temperature an amber light glows to indicate water is at temperature.

FR/CC LOW-WATER CUT-OFF

The Low-Water Cut-Off relay is available to prevent element burn out in the event the unit is turned on without adequate water in the heater.

P O BOX 340500
MILWAUKEE WI 53234-0500 USA
(800) 558-0607 (414) 671-6350
Fax (800) 543-7521 (414) 671-3976

Jun. 1984
Printed in U.S.A.
P/N 07.04.114.00

Star Manufacturing International, Inc.

QCSe3 SERIES CONVEYOR TOASTERS WITH ELECTRONIC CONTROLS

Models QCSe3-950H, QCSe3-1000 & QCSe3-1300

QCSe3 Conveyor Toasters with Electronic Controls

QCSe Features/Benefits:

- ★ Holman's easy to use electronic control panel takes the guesswork out of temperature and speed control settings for your bread products. The electronic control is pre-programmed from the factory with 4 channel settings for toast, bagels, English muffins and other. Change products on the go with the touch of a button any time during the operation.
- ★ Single order feature allows darker or lighter for one time product orders without the need to change program settings.
- ★ Super energy efficiencies with programmable feature allowing the operator to set stand by feature automatically from 1/2 hour to 8 hours. This feature will automatically reduce power by as much as 100% (power reduction can be reduced in 10% increments) if toaster is not in use after a preprogrammed set time.
- ★ Customize your settings for your specific product needs with our easy programmable electronic control. Once the control is programmed the setting will automatically default to the last saved setting.
- ★ Large LED display provides for easier reading of settings.
- ★ Holman's forced convection keeps the toaster cool to the touch and extends the life of critical components. The forced convection increases productivity by re-circulating pre-heated air into the toasting chamber.
- ★ Quartz infrared heaters provide faster, more consistent heating than traditional heating elements and responds quickly to the electronic control.
- ★ High Performance -
  QCSe3-950H with a 3" high opening produces up to 950 slices per hour
  QCSe3-1000 produces up to 1000 slices per hour.
  QCSe3-1300 produces up to 1300 slices per hour.
- ★ High volume compact toaster - requires only 18-5/8" of counter space and the forced convection system allows the unit to be placed against a wall. Other toasters have louvers requiring additional counter space.
- ★ Extended conveyor belt for easy loading and large warming area for higher production.
- ★ Heated holding area to keep toast at the perfect temperature.
- ★ 24 hours 7 days a week technical support by Star technicians.

Model QCSe3-1000

Applications:

Holman's new QCSe3 is the ultimate in conveyor toasters with touch pad electronic controls for consistent toasting and easy operation. This state of the art toaster is designed for a variety of bread products such as bagels, English muffins, toast, buns and more. Electronic controls are perfect for foodservice operations and restaurants. The innovative energy saving feature can significant reduce cost and extend component life with a simple touch of a button.

Quality Construction:

Star designs every toaster to stand up to the most rigorous foodservice demands. Stainless steel construction for long lasting durability. Heavy-duty motor, drive chain and conveyor speed control for superior reliability. Conveyor belt tension system for smooth and quiet operation. High performance quartz infrared heaters for superior toasting performance and reliability. Units are easy to disassemble with one-piece cover for cleaning and service. Toasters are furnished with 1" adjustable legs and 4' cord.

c UL us LISTED

Warranty:

Holman's conveyor toasters are covered by a one-year parts and labor warranty.

Star Manufacturing International Inc. - 10 Sunnen Drive - P.O. Box 430129 - St. Louis, MO 63143-3800
Phone: (800) 264-7827 - FAX: (800) 264-6666 - www.star-mfg.com

Star Manufacturing International, Inc.

QCSe3 Conveyor Toasters with Electronic Controls

QCSe3 SERIES CONVEYOR TOASTERS WITH ELECTRONIC CONTROLS

Models QCSe3-950H, QCSe3-1000 & QCSe3-1300

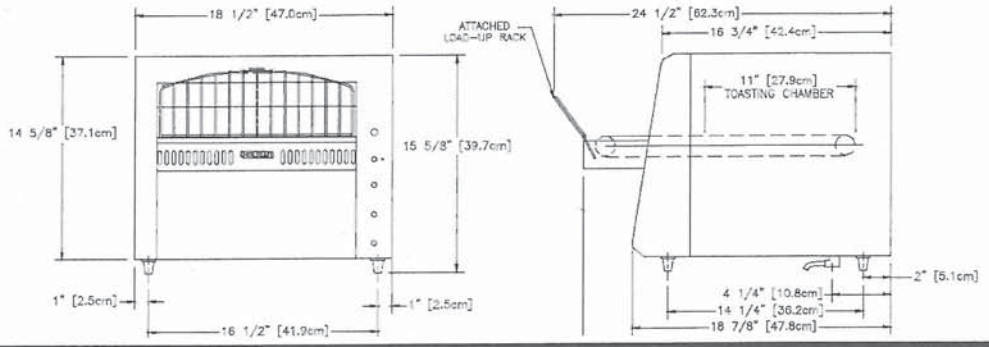

Performance Data

Model No.	Production Capacity	Product Opening
QCSe3-950H	up to 950 slices or bun halves per hour	3"
QCSe3-1000	up to 1000 slices or bun halves per hour	1-1/2"
QCSe3-1300	up to 1300 slices or bun halves per hour	1-1/2"

Specifications

Model No.	Dimensions Width Inches (cm)	Dimensions Depth Inches (cm)	Dimensions Height Inches (cm)	Shipping Weight lbs (kg)	Shipping Carton Width Inches (cm)	Shipping Carton Depth Inches (cm)	Shipping Carton Height Inches (cm)
QCSe3-950H	18-5/8 (47.3)	22-5/8 (57.5)	15-5/8 (39.7)	68 (149.6)	23 (58.4)	20-1/2 (52)	26 (66)
QCSe3-1000	18-5/8 (47.3)	22-5/8 (57.5)	15-5/8 (39.7)	68 (149.6)	23 (58.4)	20-1/2 (52)	26 (66)
QCSe3-1300	18-5/8 (47.3)	22-5/8 (57.5)	15-5/8 (39.7)	68 (149.6)	23 (58.4)	20-1/2 (52)	26 (66)

Electrical Data

Model No.	Volts	HZ 1 Phase	Amps	Watts	Heating Elements1 Above Belt	Heating Elements1 Below Belt	NEMA
QCSe3-950H	208	60	15.3	3200	2	2	6-20P
	240	60	13.3	3200	2	2	6-20P
	220	50	14.5	3200	2	2	Not Supplied with plug
QCSe3-1000	208	60	15.3	3200	2	2	6-20P
	240	60	13.3	3200	2	2	6-20P
	220	50	14.5	3200	2	2	Not Supplied with plug
QCSe3-1300	208	60	17.3	3600	3	3	6-30P
	240	60	15.0	3600	3	3	6-30P
	220	50	16.3	3600	3	3	Not Supplied with plug

1Can be supplied with metal sheathed heaters (no additional charge), however production will be reduced.

Typical Specifications

Conveyor toasters are constructed of corrosion resistant stainless steel. Supplied with heavy-duty motor, drive chain and fast heat up quartz infrared heaters. A conveyor belt tension system is supplied for a smooth, quiet operation. Units are supplied with electronic control designed with four pre-set channels, variable speed control, top and bottom heat control and power saver feature. Extended conveyor belt, crumb tray, heated holding area and full width burn guard are standard. Unit has a one-piece cover for easy access with 1" adjustable legs and a 4' cord. Units are listed with UL, CUL and are UL certified to NSF4. Patent number D459,140. Printed in the U.S.A.

Due to periodic changes in designs, methods, procedures, policies and regulations, the specifications contained in this sheet are subject to change without notice. While Star Manufacturing exercises good faith efforts to provide information that is accurate, we are not responsible for errors or omissions in information provided or conclusions reached as a result of using the specifications. By using the information provided, the user assumes all risks in connection with such use.

Star Manufacturing International Inc. - 10 Sunnen Drive - P.O. Box 430129 - St. Louis, MO 63143-3800

Phone: (800) 264-7827 - FAX: (800) 264-6666 - www.star-mfg.com

13	ITEM TYPE: STEAM KETTLE, 40 GALLON	LOGICAL CLASS: B
	DESCRIPTION: Let Type Jacketed Steam Kettle	MODEL NUMBER: Cleveland KGL-40

SPECIFICATIONS:

- leg type, gas fired steam kettle
- stationary, 2./3 steam jacketed
- 140M BTU's on 40 gallon models
- Standard Voltage is 115 volts, 60 Hz, single-phase supplied with cord and plug
- Hot and Cold WAter Faucet with Swing Spout (DPK)

ROOM LOCATION	QUANTITY
Kitchen [101A]	1
	1

PHOTO / SAMPLE

BASIS OF DESIGN:

Cleveland Gas Kettles

14	ITEM TYPE: Tilt Braising Pan, 40 Gallon	LOGICAL CLASS: B
	DESCRIPTION: 46" Wide Tilt Braising Pan	MODEL NUMBER: Vulcon - VG40

SPECIFICATIONS:

- Modular gas tilting braising pan, Vulcan-Hart Model No. (VG30) (VG40). 36"/46" wide open base. Stainless steel front, sides and 12" legs with adjustable flanged feet. Stainless steel back. Front hinged polished stainless steel pan body with coved interior corners and embossed gallon markings. Stainless steel cooking surface bonded to steel plate. Full width 4" return flange with formed pouring lip and removable strainer. Stainless steel spring assist cover with wrap around handle and condensate lip. Faucet mounting bracket (non-enclosed) field reversible "L" bracket either side. Drop away food pan receiving support mounts under pouring lip. Manually operated pan tilting mechanism with folding swing away handle. Pan can be fully tilted to empty completely with approximately 30 crank revolutions. One 30,000 BTU/hr. burner for each 12" pan width. Burners shut off when pan is tilted 5°. Electronic ignition system for automatic burner light. Solid state temperature controls. Water tight controls and enclosures. Requires a 120/60/1 electrical power supply, 3.0 amps total draw. 3/4" rear gas connection and gas pressure regulator.

ROOM LOCATION	QUANTITY
Kitchen [101A]	1
	1

PHOTO / SAMPLE

Shown with enclosed faucet bracket

BASIS OF DESIGN:

Vulcon Braising Pans

Item # _____ C.S.I. Section 11420

RESTAURANT RANGES

VULCAN

ENDURANCE GAS RESTAURANT RANGE
6 OPEN BURNERS
36" WIDE GAS RANGE

Model 36S-6B-N
(shown with optional casters)
Connect-a-Range shipped in multiple cartons

- ☐ **36S-6B-N** 1 Standard Oven / Natural Gas
- ☐ **36S-6B-P** 1 Standard Oven / Propane
- ☒ **36C-6B-N** 1 Convection Oven / Natural Gas
- ☐ **36C-6B-P** 1 Convection Oven / Propane

STANDARD FEATURES

- Fully MIG welded frame
- Stainless steel front, sides, backriser, lift-off high shelf
- 6" stainless steel adjustable legs
- Six open top burners, each burner is 30,000 BTU/hr. with lift-off burner heads
- Shrouded flash tube pilot system (one pilot per two burners)
- Heavy duty cast grates, easy lift-off 12" x 12½" in front and 12" x 14½" in the rear
- Extra deep pull out crumb tray with welded corners
- 35,000 BTU/hr. baker's depth standard oven cavity. Full size sheet pans fit side-to-side or front-to-back.
- Oven thermostat adjusts from 250°F to 500°F
- Two oven racks and four rack positions
- 35,000 BTU/hr. convection oven in place of standard oven, 24"d x 26⅜"w x 13⅞"h (115v - 1 phase blower motor 4 amp, 6' cord and plug), includes three oven racks. Full size sheet pans only fit side-to-side in convection oven. Convection oven motor requires field attachment.
- One year limited parts and labor warranty

SPECIFICATIONS

36" wide gas restaurant range, Vulcan Model No. 36S-6B-N. Fully MIG welded aluminized steel frame for added durability. Stainless steel front, sides, backriser, highshelf and 6" adjustable legs. Extra deep crumb tray with welded corners. Six 30,000 BTU/hr. open top burners with lift-off burner heads. Energy saving flashtube open burner ignition system (one pilot for every two burners) shrouded for reliability. Heavy duty cast grates, easy lift-off 12" x 12½" in the front and 12" x 14½" in the back to better accommodate stock pots or large pans. Grates have a built in aeration bowl for greater efficiency. Burner knobs are cool to the touch, high temperature material. One oven: 35,000 BTU/hr. standard bakers depth ovens with porcelain oven bottom and door panel, measures 27"d x 26⅜"w x 14"h. Oven thermostat adjusts from 250°F to 500°F with a low setting. Oven is supplied with two racks, two rack guide sets, and four rack positions. Oven door is heavy duty with an integrated door hinge/spring mechanism requiring no adjustment. ¾" rear gas connection and pressure regulator. Total input 215,000 BTU/hr.

Exterior Dimensions:
34"d x 36"w x 58"h on 6" adjustable legs

ACCESSORIES (Packaged & Sold Separately)

- ☐ Extra oven rack with rack guides
- ☐ Casters (set of four)
- ☐ Leveling casters (set of four)
- ☐ Flanged feet (set of four)
- ☐ 10" stainless steel stub back
- ☐ Reinforced high shelf for mounting salamander broiler

VULCAN
a division of ITW Food Equipment Group LLC
P.O. Box 696 ▪ Louisville, KY 40201 ▪ Toll-free: 1-800-814-2028 ▪ Local: 502-778-2791 ▪ Quote & Order Fax: 1-800-444-0602

ENDURANCE GAS RESTAURANT RANGE
6 OPEN BURNERS
36" WIDE GAS RANGE

INSTALLATION INSTRUCTIONS

1. A pressure regulator sized for this unit is included. Natural gas 5.0" W.C., propane gas 10.0" W.C.
2. Gas line connecting to range must be ¾" or larger. If flexible connectors are used, the inside diameter must be ¾" or larger.
3. An adequate ventilation system is required for commercial cooking equipment. Information may be obtained by writing to the National Fire Protection Association, 1 Batterymarch Park, Quincy, MA 02269, www.NFPA.org. When writing, refer to NFPA No. 96.
4. These units are manufactured for installation in accordance with ANSZ223.1A (latest edition), National Fuel Gas Code. Copies may be obtained from The American Gas Association, 400 N Capitol St. NW, Washington, DC 20001, www.AGA.org.
5. **Clearances**

	Rear	Sides
Combustible	6"	10"
Standard Oven Non-combustible	0"	0"
Convection Oven Non-combustible	Min. 4"	0"

6. For proper combustion, install equipment on adjustable legs or casters provided with unit.

NOTE: In line with its policy to continually improve its product, Vulcan reserves the right to change materials and specifications without notice.

Specify type of gas when ordering.
Specify altitude when above 2,000 feet.

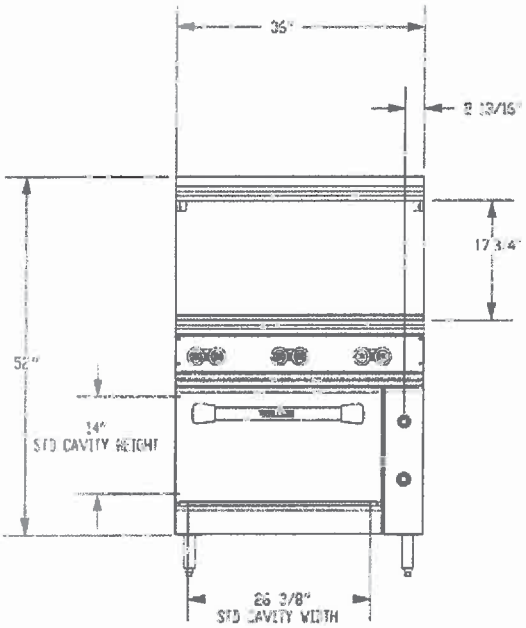

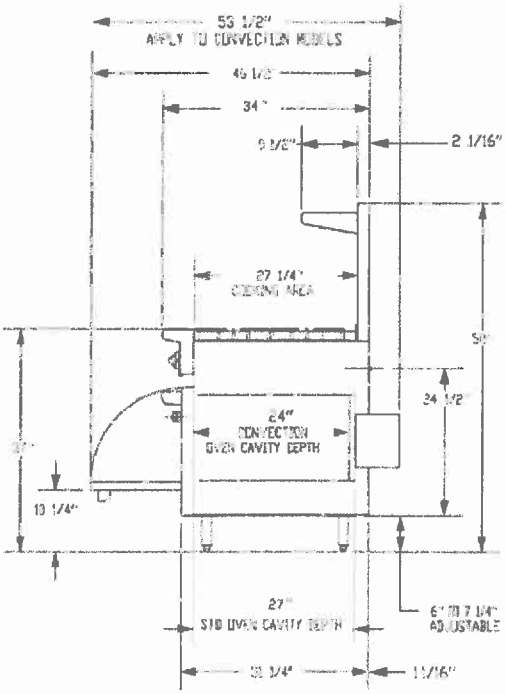

TOP CONFIGURATION	MODEL NUMBER	DESCRIPTION	TOTAL INPUT BTU / HR	SHIPPING WEIGHT LBS / KG
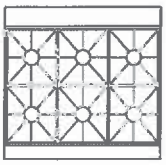	36S-6B-N	1 Standard Oven / 6 Burners / Natural Gas	215,000	520 / 236
	36S-6B-P	1 Standard Oven / 6 Burners / Propane	215,000	520 / 236
	36C-6B-N	1 Convection Oven / 6 Burners / Natural Gas	215,000	580 / 263
	36C-6B-P	1 Convection Oven / 6 Burners / Propane	215,000	580 / 263

This appliance is manufactured for commercial use only and is not intended for home use.

a division of ITW Food Equipment Group LLC
P.O. Box 696 ■ Louisville, KY 40201 ■ Toll-free: 1-800-814-2028 ■ Local: 502-778-2791 ■ Quote & Order Fax: 1-800-444-0602

NOTE: In line with its policy to continually improve its products, Vulcan reserves the right to change materials and specifications without notice.

Printed On Recycled Paper

Item # _____ C.S.I. Section 11420

OVENS

VC66G SERIES
DOUBLE DECK, DEEP DEPTH GAS CONVECTION OVENS

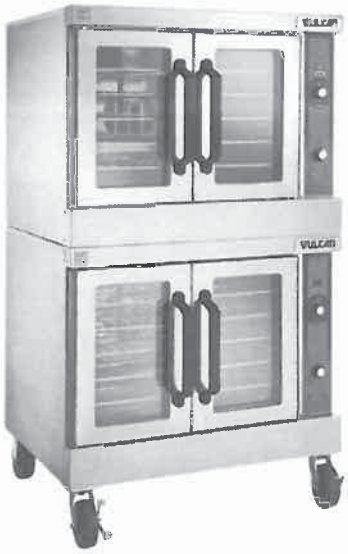

Model VC66GD
shown with optional casters

☐ **VC66GD** Solid state temperature controls adjust from 150° to 500°F. 60 minute timer with audible alarm.

☐ **VC66GC** Computer controls with digital time and temperature readouts. 99-hour timer with audible alarm. Roast and Hold cycle. One hundred programmable menu selections. Shelf I.D. programming.

STANDARD FEATURES

- Stainless steel front, sides, top and legs.
- Independently operated stainless steel doors with double pane windows.
- 44,000 BTU/hr. burner per section. 88,000 BTU/hr. total input.
- Electronic spark igniters.
- ½ H.P. two speed oven blower-motor. 120/60/1 with 6' cord and plug. 8 amps per section. 16 amps total draw.
- Oven cool switch for rapid cool down.
- Porcelain enamel on steel oven interiors.
- Five nickel plated oven racks with eleven rack positions per section.
- ¾" rear gas connection with combination gas pressure regulator and safety solenoid system.
- One year limited parts and labor warranty.

SPECIFICATIONS

Double section, deep depth gas convection oven, Vulcan-Hart Model No. (VC66GD) (VC66GC). Stainless steel front, sides, top and legs. Independently operated stainless steel doors with double pane windows. Non-sag insulation applied to the top, rear, sides, bottom and doors. Porcelain enamel on steel oven interiors measures 29"w x 26⅛"d x 20"h. Two interior oven lights per section. Five nickel plated oven racks per section measure 28¼" x 24½". Eleven position nickel plated rack guides with positive rack stops. One 44,000 BTU/hr. burner per section. 88,000 BTU/hr. total input. Electronic spark igniters. Furnished with a two speed ½ H.P. oven blower-motor per section. Oven cool switch for rapid cool down. 120 volt, 60 Hz, 1 ph power supply required. 6' cord and plug. 8 amps total draw per section.

Exterior Dimensions:

40¼"w x 45⅛"d (includes motor & door handles) 41¾"d (includes motor only) x 70"h on 8" legs.

CSA design certified. NSF listed.

SPECIFY TYPE OF GAS WHEN ORDERING.
SPECIFY ALTITUDE WHEN ABOVE 2,000 FT.

OPTIONS

- ☐ Complete prison package.
  - ☐ Security screws only.
- ☐ 208V or 240V, 60 Hz, 1 ph, two speed, ½ H.P. blower motor.
- ☐ Casters.
- ☐ Simultaneous chain driven doors.
- ☐ Stainless steel rear enclosure.
- ☐ Second year extended limited parts and labor warranty.

ACCESSORIES

- ☐ Extra oven rack(s).
- ☐ Rack hanger(s).
- ☐ Stainless steel drip pan.
- ☐ Flexible gas hose with quick disconnect and restraining device. Consult price book for available sizes.
- ☐ Down draft flue diverter for direct vent connection.

VULCAN
a division of ITW Food Equipment Group LLC
P.O. Box 696 ■ Louisville, KY 40201 ■ Toll-free: 1-800-814-2028 ■ Local: 502-778-2791 ■ Quote & Order Fax: 1-800-444-0602

VC66G SERIES
DOUBLE DECK, DEEP DEPTH GAS CONVECTION OVENS

INSTALLATION INSTRUCTIONS

1. A combination gas pressure regulator and safety solenoid system is included in this unit. Natural gas is 3.5" W.C., Propane gas is 10.0" W.C.
2. An adequate ventilation system is required for commercial cooking equipment. Information may be obtained by writing to the National Fire Protection Association, Batterymarch Park, Quincy, MA 02289. When writing, refer to NFPA No. 96.
3. These units are manufactured for installation in accordance with ANSZ223.1 (latest edition), National Fuel Gas Code. Copies may be obtained from American Gas Association Inc., Accredited Standards Committee Z223, 400 N. Capitol St. NW, Washington, DC 20001 or the Secretary Standards Council, NFPA, 1 Batterymarch Park, Quincy, MA 02169-7471.
4. Clearances:

	Combustible	Non-combustible
Rear	2"	2"
Right Side	4"	4"
Left Side	1"	0"

5. This appliance is manufactured for commercial installation only and is not intended for home use.

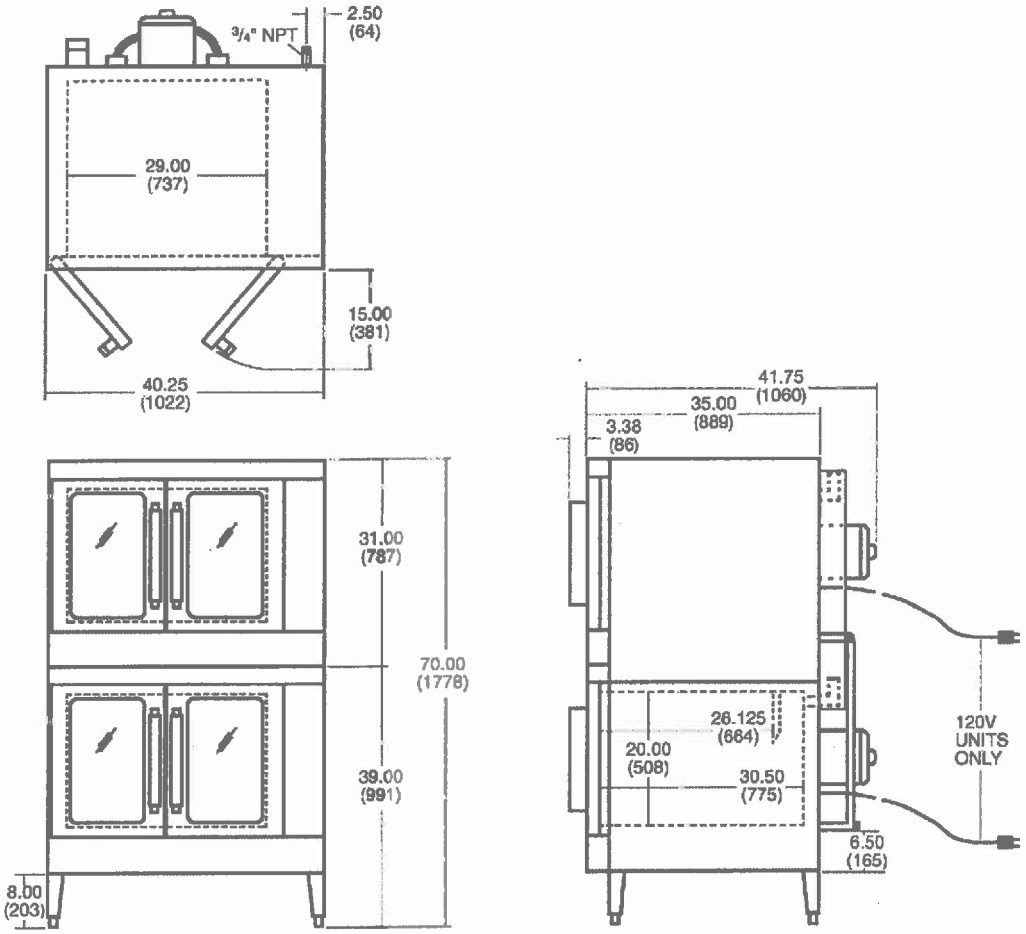

MODEL NO.	WIDTH	DEPTH (INCLUDES HANDLES)	HEIGHT	BTU/HR. PER OVEN	TOTAL BTU/HR.	ELECTRICAL	WEIGHT			
							WITH SKIDS & PACKAGING		WITHOUT SKIDS & PACKAGING	
							LBS.	KG	LBS.	KG
VC66G	40¼"	45⅛"	70"	44,000	88,000	120/60/1	984	446	866	392

VULCAN
a division of ITW Food Equipment Group LLC
P.O. Box 696 ■ Louisville, KY 40201 ■ Toll-free: 1-800-814-2028 ■ Local: 502-778-2791 ■ Quote & Order Fax: 1-800-444-0602

NOTE: In line with its policy to continually improve its products, Vulcan reserves the right to change materials and specifications without notice.

Printed On Recycled Paper

55

INSTRUCTIONS

MODEL 6430, 6430T, 6460 & 6460T POTATO PEELER

MODEL

ML-19628	6430
ML-19629	6430T
ML-19630	6460
ML-19631	6460T

HOBART CORPORATION

701 S. RIDGE AVENUE
TROY, OHIO 45374-0001

FORM 34675 (Apr. 2002)

Installation, Operation and Care of MODEL 6430, 6430T, 6460 & 6460T PEELERS

SAVE THESE INSTRUCTIONS

GENERAL

Models 6430 and 6430T Peelers are designed to peel 30 to 33 lbs (13.5 to 15.0 kg) of product in 1 to 3 minutes using a 3/4 HP, single- or three-phase electric motor. The 6430T includes a synchronous timer and is available for single-phase electrical service ONLY.

Models 6460 and 6460T Peelers are designed to peel 50 to 60 lbs (22.5 to 27.0 kg) of product in 1 to 3 minutes using a 1 HP, single- or three-phase electric motor. The 6460T includes a synchronous timer and is available for single-phase electrical service ONLY.

All models incorporate a reinforced peeling disc with the abrasive permanently bonded to its surface and a Lexan Liner for the inside of the hopper. The switch or timer is mounted on the right side of the discharge chute as standard but can be ordered on the left or changed in the field. The bottom of the peeler unit is cushioned with a rubber trim molding which also provides a seal.

Optional accessories include a peel trap or disposer stand.

INSTALLATION

NOTE: Immediately after unpacking, machine should be checked for possible shipping damage. If the machine is found to be damaged after unpacking, save the packaging material and contact the shipper.

This machine MUST be cleaned after installation and before being put into service. Refer to MAINTENANCE for instructions.

PEELER UNIT (FIG. 1)

1. Remove the peeler from its shipping carton and remove the hopper top.
2. Remove the fill tube and bracket assembly from the peeler housing and the cloth bag containing the fill tube gasket and acorn nuts.
3. Do NOT remove the rubber molding on bottom of peeler.
4. Lay the peeler on its side. Slightly loosen the clamp that attaches the drain hose and pull the drain hose down so that it extends approximately 7/8" below the bottom of peeler housing. Tighten the clamp.

On units that will NOT use a peel trap or disposer stand, attach the bottom cover plate using the bolts and washers supplied with the unit.

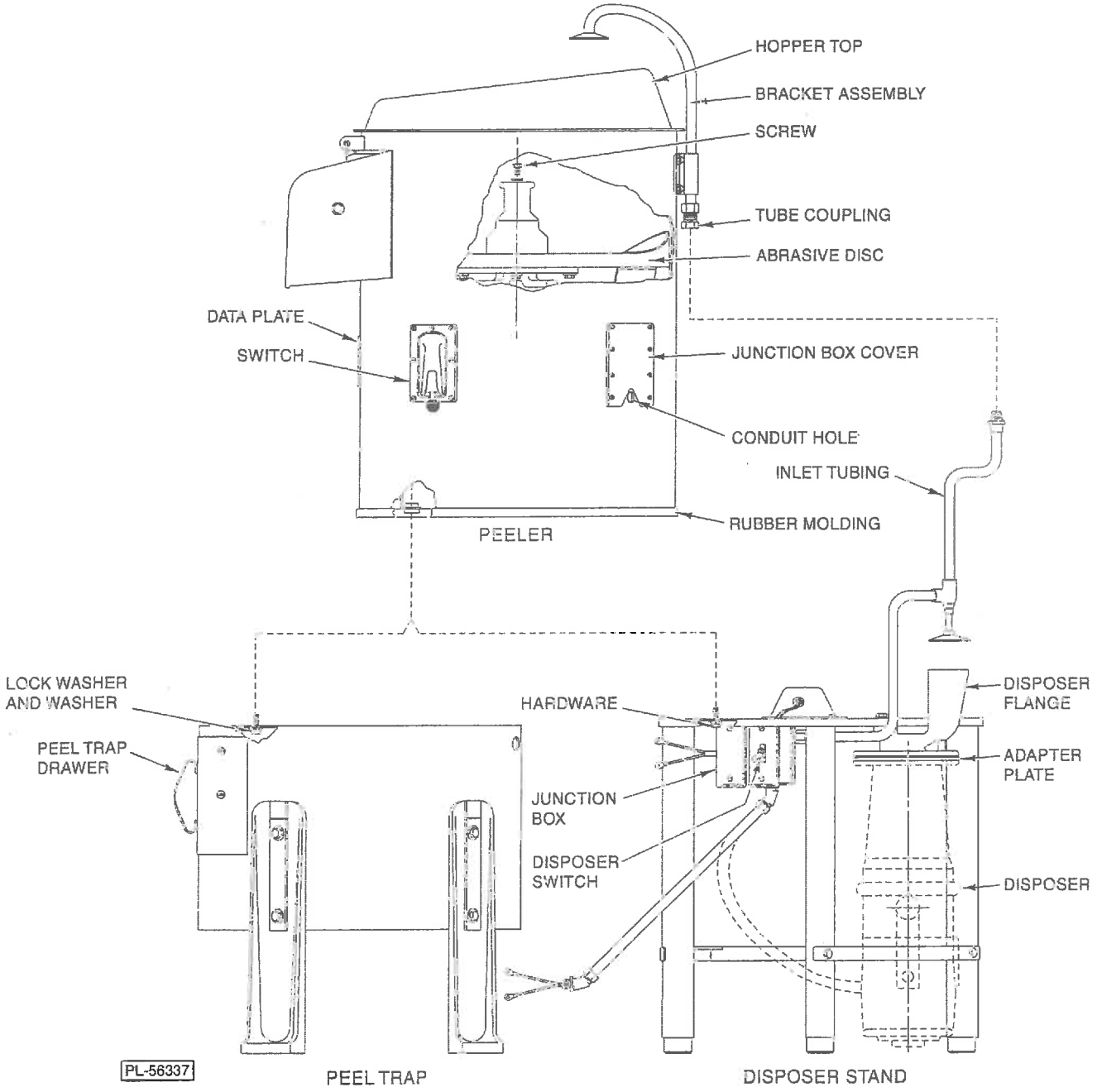
HOPPER TOP
BRACKET ASSEMBLY
SCREW
TUBE COUPLING
ABRASIVE DISC
DATA PLATE
SWITCH
JUNCTION BOX COVER
CONDUIT HOLE
INLET TUBING
RUBBER MOLDING
PEELER
LOCK WASHER AND WASHER
PEEL TRAP DRAWER
HARDWARE
JUNCTION BOX
DISPOSER SWITCH
DISPOSER FLANGE
ADAPTER PLATE
DISPOSER
PL-56337
PEEL TRAP
DISPOSER STAND

Fig. 1

LEXAN LINER

1. Slide the liner (Fig. 2) into the hopper, ensure the liner is under retaining brackets (Fig. 2) and resting on the top of the lip (Fig. 2) on the bottom of the hopper chamber.

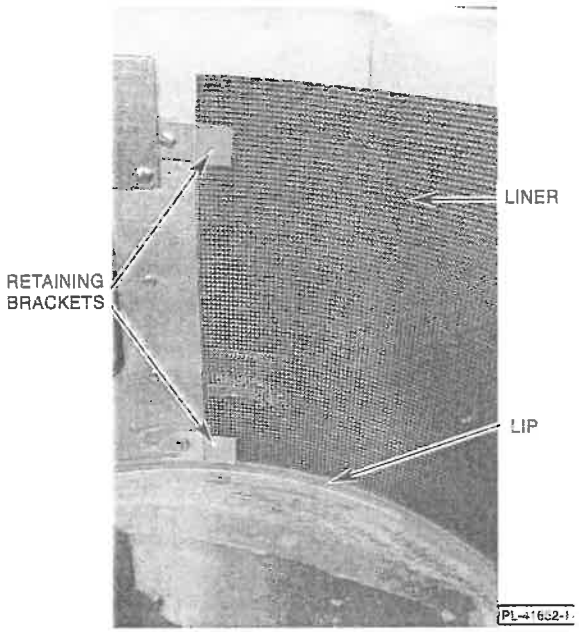

Fig. 2

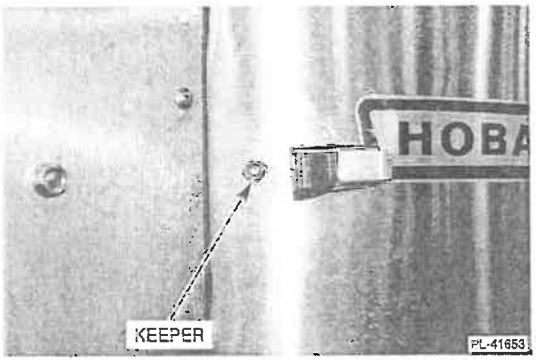

Fig. 3

2. Push the liner keeper into the hole (Fig. 3) provided.
3. Secure the keeper using the exterior latch.

PEEL TRAP

If a peel trap is to be used, unpack the trap from its shipping carton. Remove the legs and cloth bag from inside the peel trap. The cloth bag contains hardware for attaching the legs.

Legs

It will be necessary to remove the peel trap drawer (Fig. 1) to allow enough room for attaching the legs.

Assemble the legs as follows (Fig. 4):

1. Lay the peel trap on its side.
2. Assemble one of the rubber gaskets to one of the curved leg clamp bolts.
3. Assemble the bolt and gasket from the inside, through one of the leg bolt holes in the peeler housing.
4. Assemble a leg and a leg slot cover on the leg clamp bolt.
5. Place a stainless steel washer and acorn nut onto the clamp bolt and partially tightened, set unit upright.
6. Each leg has an upper and lower leg clamp bolt assembly. When all are assembled and partially tightened, set unit upright.
7. Adjust each leg to a suitable height such that the unit is level, and tighten the acorn nuts.

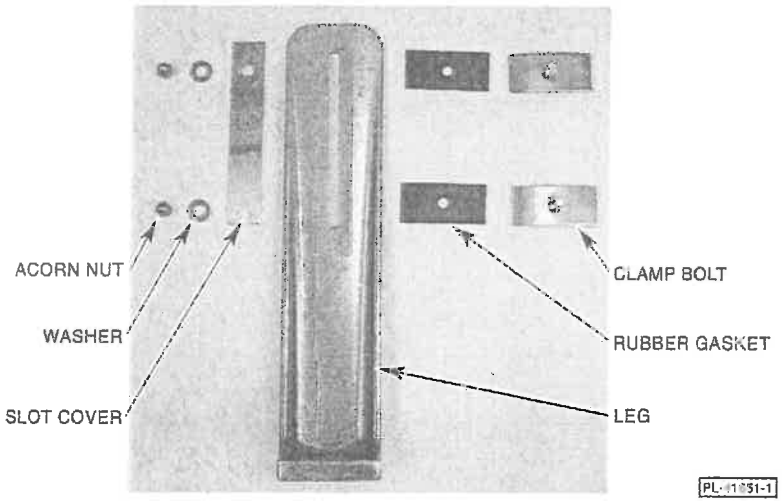

Fig. 4

Peelers

The peeler may be positioned on the peel trap in one of four positions. Each of the positions will cause the peel trap drawer to be located in a different position relative to the discharge chute.

The peel trap drawer may be directly beneath the discharge chute, to the right, left or rear (see Fig. 5).

After selecting the most convenient position for the peel trap drawer, remove the cover disc from the appropriate hole in the peel trap top and position the peeler on top of the peel trap, with the peeler drain hose extending through selected hole (Fig. 5).

The cloth bag shipped in peel trap drawer contains the capscrews, lockwashers and washers (Fig. 1) necessary for fastening the peeler to peel trap.

CAUTION: Excessive tightening of screws may distort housing.

If desired, the peel trap legs may be bolted to the floor.

RELATIONSHIP OF PEELER WITH TRAP

VIEW OF TOP OF PEEL TRAP

To position peel trap drawer BENEATH the discharge chute:

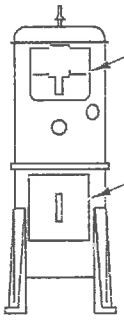

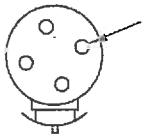

Remove cover disc and place drain hose through this hole.

To position peel trap drawer to the RIGHT of discharge chute:

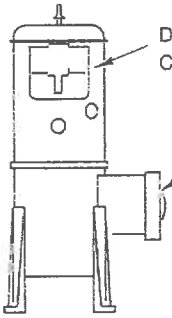

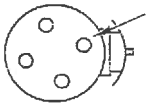

Remove cover disc and place drain hose through this hole.

To position peel trap drawer to the LEFT of discharge chute:

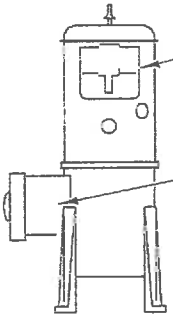

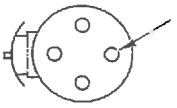

Remove cover disc and place drain hose through this hole.

To position peel trap drawer to the REAR of discharge chute:

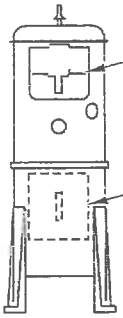

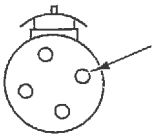

Remove cover disc and place drain hose through this hole.

PL-56327

Fig. 5

DISPOSER STAND

If a disposer stand is to be used, unpack the stand from its shipping carton. The feet may be threaded in or out as necessary to level the disposer stand.

The disposer flange, adapter plate, gaskets and all hardware required for mounting the disposer are assembled and packed in a separate container. Refer to the disposer manual shipped with the disposer and follow the recommendations contained in it. Remove the three mounting bolts and lockwashers from the disposer flange.

Attach the disposer flange (Fig. 1) and if necessary, the adapter plate (Fig. 1) to the disposer.

NOTE: If a Hobart disposer is used, remove and discard the adapter plate and the smaller of the two gaskets.

Using the three mounting bolts and lockwashers (previously removed from disposer flange), mount the disposer and flange assembly to the disposer stand.

Peeler

Position the peeler on top of the disposer stand. Place the peeler drain hose in the hole above the disposer. Fasten the peeler to the stand using hardware (Fig. 1) shipped in the bag tied to the disposer stand.

If desired, the disposer stand feet may be bolted to the floor.

PLUMBING

WARNING: PLUMBING CONNECTIONS MUST COMPLY WITH APPLICABLE SANITARY, SAFETY AND PLUMBING CODES.

Peeler Unit Without Disposer

Using the supplied acorn nuts and gasket, attach the fill tube and bracket assembly (Fig. 1) to the peeler.

Connect a cold water supply to the 1/2" fill tube coupling (Fig. 1).

NOTE: A globe valve for controlling water supply should be installed in the water supply line at a location convenient to the operator.

Peeler Unit With Disposer

Using the supplied acorn nuts and gasket, attach the fill tube and bracket assembly (Fig. 1) to the peeler.

Connect the water inlet tubing (Fig. 1) to the 1/2" fill tube coupling (Fig. 1). Connect the other end of the water inlet tubing to the fill valve, which is mounted on the disposer stand.

Connect a cold water supply line to the fill valve, which has a 3/8"-18 N.P.S. female connection.

ELECTRICAL CONNECTIONS

Before making electrical connections, check the specifications on peeler data plate (Fig 1), as well as those of the disposer (where applicable), to assure they agree with those of your electrical service.

WARNING: ELECTRICAL AND GROUNDING CONNECTIONS MUST COMPLY WITH THE APPLICABLE PORTIONS OF THE NATIONAL ELECTRICAL CODE AND/OR OTHER LOCAL ELECTRICAL CODES.

WARNING: DISCONNECT ELECTRICAL POWER SUPPLY AND PLACE A TAG AT THE DISCONNECT SWITCH TO INDICATE CIRCUIT IS BEING WORKED ON.

If it is desired to move the switch (Fig. 1) or timer to the opposite side of the discharge chute, simply remove the screws that attach the switch or timer and cover plates. Interchange the switch or timer and cover plates and fasten each with the screws.

A 7/8" conduit hole (Fig. 1) is provided in the peeler housing for 1/2" trade size electrical conduit. Remove the junction box cover (Fig. 1), make electrical connections and replace the cover.

A separate junction box (Fig. 1) is provided for making disposer connections.

NOTE: The following information is compiled in accordance with the National Electrical Code, latest edition.

BRANCH CIRCUIT SIZE AND PROTECTION

DUAL ELEMENT TIME-DELAY FUSE						
Volts	Phase	Minimum Circuit Ampacity		Maximum Fuse Size		60°C Copper Wire Size
		6430	6460	6430	6460	
115	1	25	25	25	25	10
200-230	1	15	15	15	15	14
200-230	3	15	15	6	10	14
460	3	15	15	3	6	14

INVERSE TIME CIRCUIT BREAKER						
Volts	Phase	Minimum Circuit Ampacity		Maximum Circuit Breaker Size		60°C Copper Wire Size
		6430	6460	6430	6460	
115	1	25	30	25	30	10
200-230	1	20	20	20	20	12
200-230	3	15	15	10	10	14
460	3	15	15	6	6	14

OPERATION

Using the lugs on the hopper top as locators, position the hopper top on the housing and turn it clockwise into place.

Close and latch the discharge chute door.

Pour the product into the hopper. There should be room in the hopper for the product to move around while peeling. Do NOT overload the peeler; peeler capacities are 30 to 33 lbs (13.5 to 15.0 kg) maximum for the 6430/6430T and 50 to 60 lbs (22.5 to 27.0 kg) for the 6460/6460T.

Turn on the water supply. On units with a disposer , turn on the disposer switch (Fig. 1). This will open the valve.

Turn on the peeler. On units equipped with a timer, set the timer at the desired time.

Peeling times will vary depending on the type and condition of product. When the desired degree of peeling has been reached, turn off the water (or disposer where applicable). Place a container to catch the product under the discharge chute door.

NOTE: On units equipped with a timer, if the timer has expired, it will be necessary to reset the timer to allow enough time for the product to be discharged.

After the product has been completely discharged, turn off the peeler and it is ready for a repeat operation.

If the peeler is equipped with a peel trap, it will be necessary to empty the peel trap drawer occasionally (after a few batches).

WARNING: DISCONNECT ELECTRICAL POWER SUPPLY AND REPLACE A TAG AT THE DISCONNECT SWITCH, INDICATING CIRCUIT IS BEING WORKED ON BEFORE BEGINNING ANY MAINTENANCE PROCEDURE.

CLEANING

The peeler should be cleaned after the peeling operation has been completed.

As soon as the peeling operation has been completed and BEFORE the hopper has had time to dry, turn on the water or disposer, if equipped, and flush the interior of the hopper. Turn off the water (or disposer).

Rotate the hopper top COUNTERCLOCKWISE and lift to remove. Clean the hopper top in a sink.

Lift out the abrasive disc (Fig. 1), which is NOT fastened to the shaft and scrub it with a brush and mild soap. Clean the housing beneath the abrasive disc with mild soap and water.

NOTE: If the abrasive disc should stick and is NOT easily removed, it may be loosened by removing the hex head screw (Fig. 1) on top of the hub and threading a longer screw (such as $^{5}/_{16}$"-18 x 1-$^{1}/_{2}$") in until disc loosens.

To remove the lexan liner, unlatch the exterior latch on the outside of the hopper and push the keeper out of the hole (Fig. 3). Slide the liner out from under the retaining brackets. Take to the sink and scrub with a nonabrasive brush, using soap and water to clean. Allow to air dry before installing into the hopper.

Turn on the water or disposer, if equipped, and thoroughly clean the interior of the hopper using a mild soap and brush. Turn off the water or disposer.

If the drawer is equipped with a peel trap, remove the peel trap drawer and thoroughly clean the drawer, as well as the peel trap interior.

The discharge chute MUST be left open when the unit is NOT in use in order to prolong the life of the door seal.

MOTOR

This machine is equipped with a manual-reset overload protection switch. If during operation, the motor should overheat and trip this switch, turn the peeler switch or timer off and allow the motor to cool for several minutes. To reset the switch, remove the top screw from the round cover plate (Fig. 6), rotate the cover plate and push the red button (Fig. 6). Install round cover plate and screw onto potato peeler.

If the overload switch persists in tripping, contact your local Hobart Service Office.

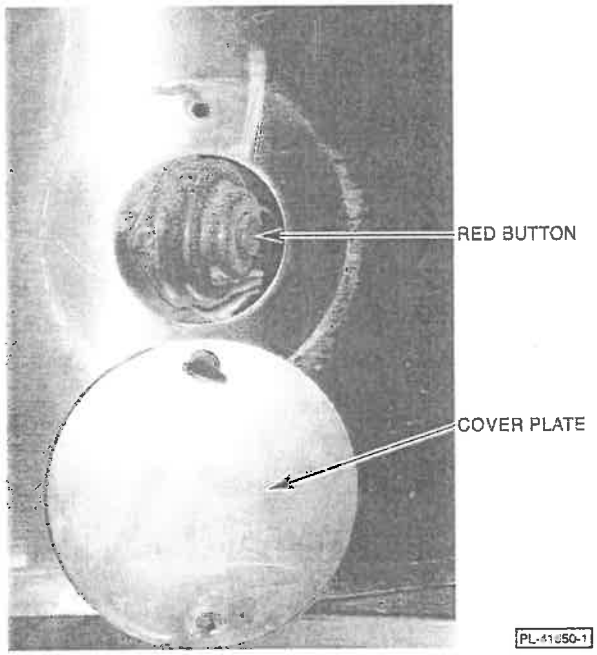

Fig. 6

MAINTENANCE

LUBRICATION

The peeler uses sealed ball bearings and therefore, requires no lubrication maintenance.

TROUBLESHOOTING

SYMPTOM	POSSIBLE CAUSE
Peeler won't operate.	Electrical power not connected.
	Circuit breaker tripped or fuse blown.
Excessive foaming.	Too much water in the hopper.
If the above suggestions do not remedy the situation, contact Hobart Service Office.	

SERVICE

Contact your local Hobart-authorized Service Office for any repairs or adjustments needed on this equipment.

INSTALLATION DIAGRAM (WITHOUT TRAP)

LEGEND

E1-ELECTRICAL CONN.: 7/8" DIA. HOLE (FOR 1/2" CONDUIT)
P1-WATER CONNECTION: ST'D. 1/2" FEMALE PIPE THREAD
P2-DRAIN HOSE: 2-3/8" I.D. X 2-3/4" O.D.

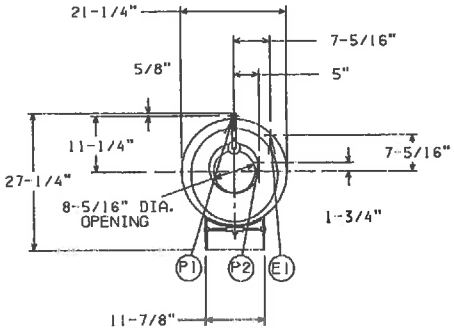

WARNING

ELECTRICAL AND GROUNDING CONNECTIONS MUST COMPLY WITH THE APPLICABLE PORTIONS OF THE NATIONAL ELECTRICAL CODE AND/OR OTHER LOCAL ELECTRICAL CODES.

PLUMBING CONNECTIONS MUST COMPLY WITH APPLICABLE SANITARY, SAFETY AND PLUMBING CODES IN FORCE.

NOTE:

NET WEIGHT OF PEELER - 142 LBS.
DOMESTIC SHIPPING WEIGHT OF PEELER - 147 LBS.

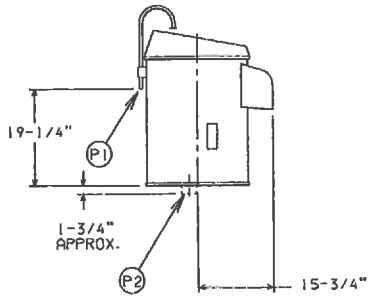

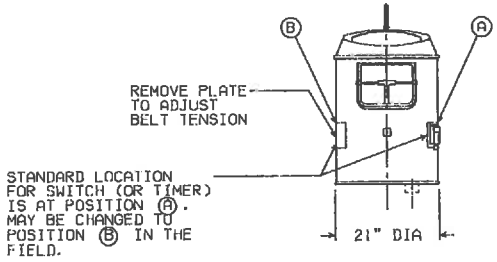

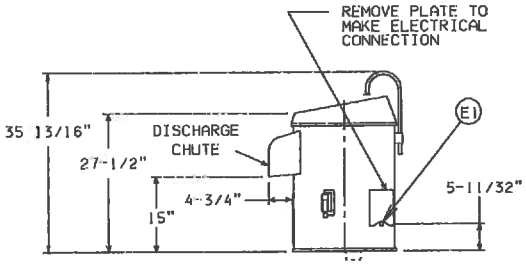

MODEL/ ELEC. CODE	ELECTRICAL SPECIFICATION	AMPS	DUAL ELEMENT TIME DELAY FUSE STYLE			INVERSE TIME CIRCUIT BREAKER STYLE		
			MINIMUM CIRCUIT AMPACITY	MAXIMUM FUSE SIZE	60° C COPPER WIRE SIZE	MINIMUM CIRCUIT AMPACITY	MAXIMUM CIRCUIT BREAKER	60° C COPPER WIRE SIZE
6430/J	200-230/60/3	3.2	15	6	14	15	10	14
6430/H	460/60/3	1.6	15	3	14	15	6	14
6430T/A	115/60/1	13.0	25	25	10	25	25	10
6430T/E	200-230/60/1	6.5	15	15	14	20	20	12

MODEL 6430 & 6430-T
PEELER (WITHOUT TRAP)
D-272008
REV. C

PL-56334

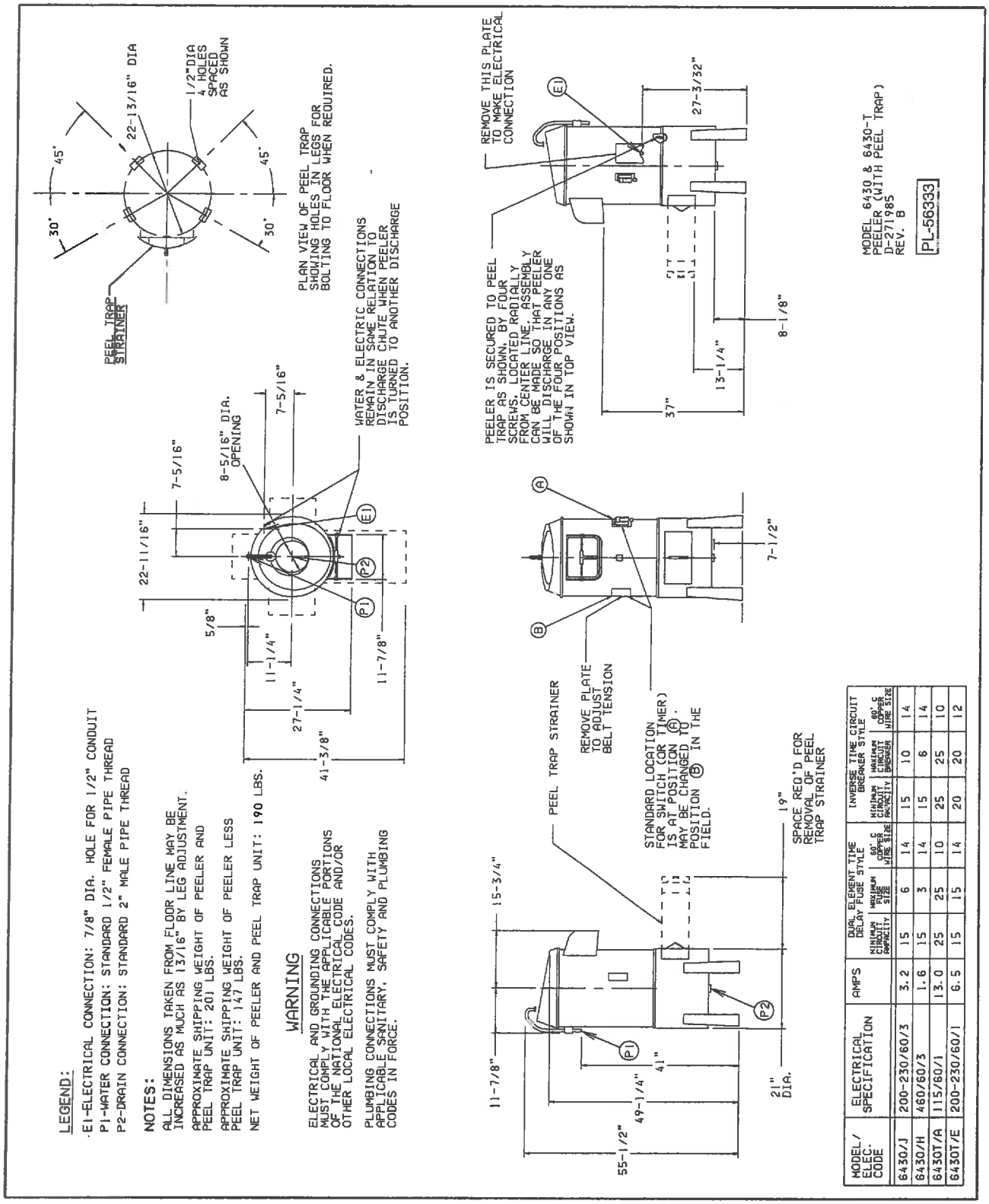

MODEL/ ELEC. CODE	ELECTRICAL SPECIFICATION	AMPS	DUAL ELEMENT TIME DELAY FUSE STYLE			INVERSE TIME CIRCUIT BREAKER STYLE		
			MINIMUM CIRCUIT CAPACITY	MAXIMUM FUSE SIZE	60° C COPPER WIRE SIZE	MINIMUM CIRCUIT CAPACITY	MAXIMUM CIRCUIT BREAKER	60° C COPPER WIRE SIZE
6430/J	200-230/60/3	3.2	15	6	14	15	10	14
6430/H	460/60/3	1.6	15	3	14	15	6	14
6430T/A	115/60/1	13.0	25	25	10	25	25	10
6430T/E	200-230/60/1	6.5	15	15	14	20	20	12

INSTALLATION DIAGRAM (WITH TRAP)

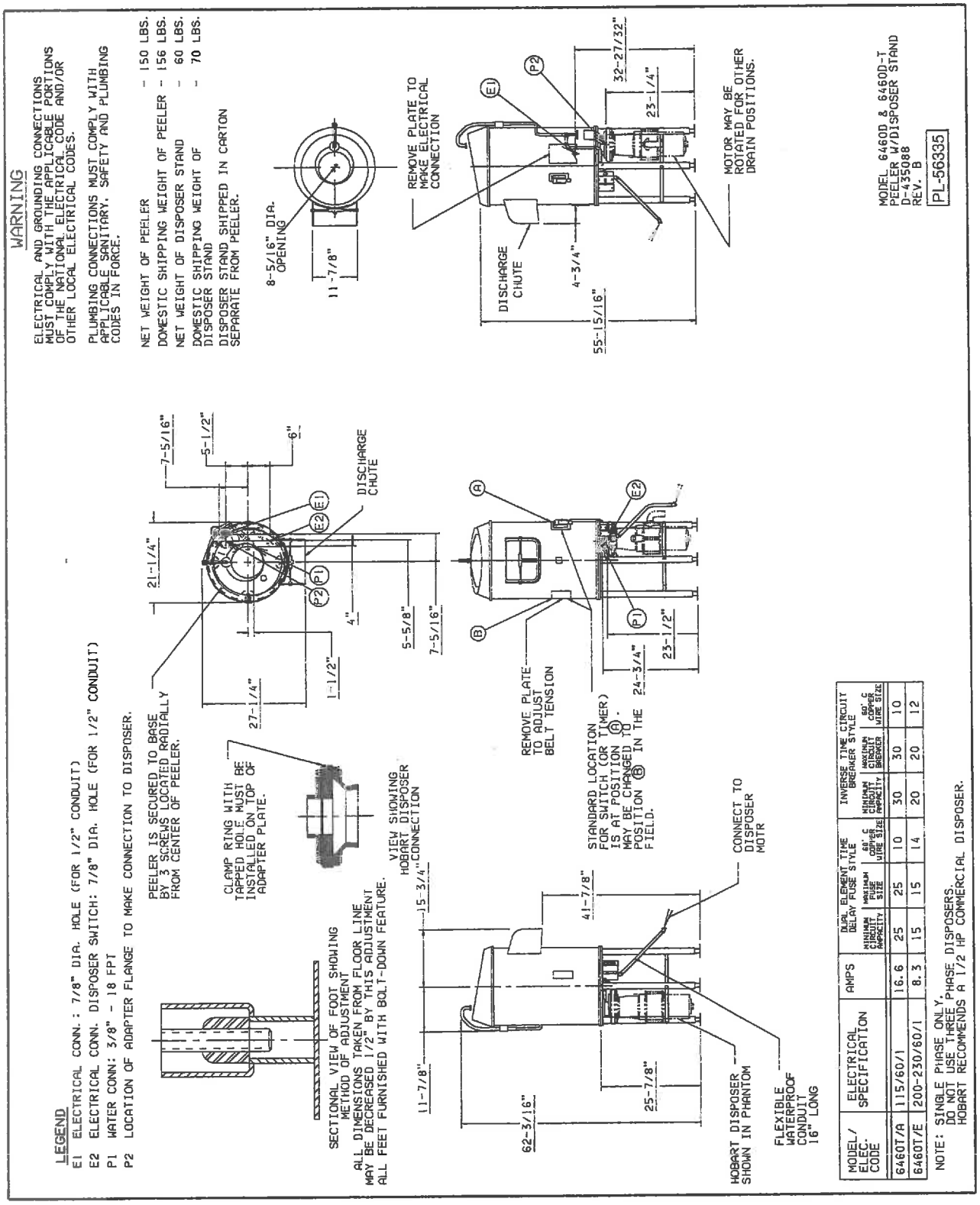

MODEL/ ELEC. CODE	ELECTRICAL SPECIFICATION	AMPS	DUAL ELEMENT TIME DELAY FUSE STYLE			INVERSE TIME CIRCUIT BREAKER STYLE		
			MINIMUM CIRCUIT AMPACITY	MAXIMUM FUSE SIZE	60° C COPPER WIRE SIZE	MINIMUM CIRCUIT AMPACITY	MAXIMUM CIRCUIT BREAKER	60° C COPPER WIRE SIZE
6460T/A	115/60/1	16.6	25	25	10	30	30	10
6460T/E	200-230/60/1	8.3	15	15	14	20	20	12

INSTALLATION DIAGRAM (DISPOSER STAND)

Manitowoc

Indigo™ Series 1400 Ice Cube Machine

Indigo™ Series 1400 Ice Cube Machine

Model: ☒ ID-1402A ☐ ID-1403W ☐ ID-1492N
☐ IY-1404A ☐ IY-1405W ☐ IY-1494N

Indigo Series I-1400
Ice Machine on B-970 Bin

Designed for operators who know that ice is critical to their business, the Indigo™ Series ice machine's preventative diagnostics continually monitor itself for reliable ice production. Improvements in cleanability and programmability make your ice machine easy to own and less expensive to operate.

- **Space-Saving Design** – Up to 1,550 lbs. (705 kgs.) daily ice production and only 48" (121.92 cm) wide.
- **Intelligent Diagnostics** – provide 24 hour preventative maintenance and diagnostic feedback for trouble free operation.
- **Acoustical Ice Sensing Probe** – for reliable operation in challenging water conditions.
- **EasyRead Display** – communicates operating status, cleaning reminders, and asset information through a blue illuminated display.
- **Programmable Ice Production** – by On/Off Time, Ice Volume or Bin Level (with accessory bin level control) further improves energy efficiency and savings.
- **Easy to Clean Foodzone** – Hinged front door swings out for easy access. Removable water-trough, distribution tube, curtain, and sensing probes for fast and efficient cleaning. Select components made with AlphaSan© antimicrobial.
- **DuraTech™ Exterior** – provides superior corrosion resistance. Stainless finish with innovative clear-coat resists fingerprints and dirt.
- Available **LuminIce™ Growth Inhibitor** controls the growth of bacteria and yeast within the foodzone.

COMMERCIAL WARRANTY

ICE MAKER	EVAPORATOR	COMPRESSOR
3 YEAR	5 YEAR	5 YEAR PARTS
PARTS AND LABOR		3 YEAR LABOR

Ice Machine Electric

208-230/60/1 standard
(208-230/60/3 and 230/50/1 also available.)

Minimum circuit ampacity:

Air-cooled:	18.3 *1ph*	13.2 *3ph*
Water-cooled:	16.9 *1ph*	11.8 *3ph*
Remote-cooled:	17.9 *1ph*	12.8 *3ph*

Maximum fuse size:

Air-cooled:	30 *1ph*	20 *3ph*
Water-cooled:	30 *1ph*	20 *3ph*
Remote-cooled:	30 *1ph*	20 *3ph*

Specifications

BTU Per Hour:

23,500 (average)
27,000 (peak)

Refrigerant:

R-404A CFC-free

Operating Limits:

- Ambient Temperature Range: 35° to 110°F (1.7° to 43.3°C)
  Water Temperature Range: 35° to 90°F (1.7° to 32.2°C)
- Water Pressure Ice Maker Water In:
  Min. 20 psi (137.9 kPA)
  Max. 80 psi (551.1 kPA)

Ice Shape

Half Dice
⅜" x 1⅛" x ⅞"
(.95 x 2.86 x 2.22 cm)

Dice
⅞" x ⅞" x ⅞"
(2.22 x 2.22 x 2.22 cm)

CALIFORNIA LOW LEAD QUALIFIED · NSF · c UL US LISTED · CE · COMPANY WITH QUALITY SYSTEM

2110 South 26th Street
PO Box 1720
Manitowoc, WI 54221-1720 USA

Tel: 1.920.682.0161
Fax: 1.920.683.7589

www.manitowocice.com

Manitowoc

Manitowoc

Indigo™ Series 1400 Ice Cube Machine

i-1400 on B-970 Storage Bin

Installation Note

Air Cooled clearance:

Top: 24" (61.0 cm)
Sides: 24" (61.0 cm)
Back: 5" (30.5 cm)

Water Cooled clearance:

Top/Sides: 8" (20.3 cm)
Back: 5" (12.7 cm)

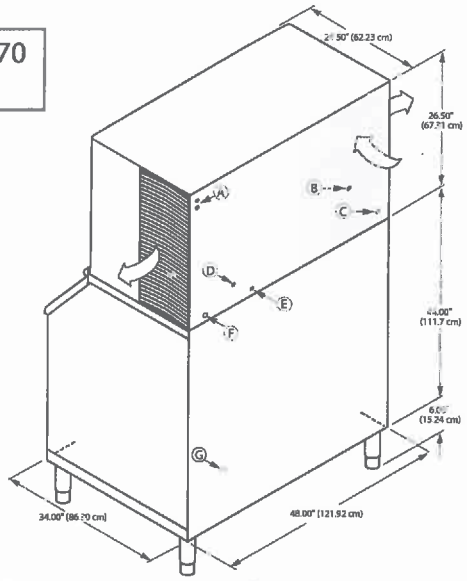

(A) Electrical Entrance (2) Options
(B) 1/2" (1.27 cm) F.P.T. Water Condenser Outlet (water-cooled units)
(C) 3/8" (0.95 cm) F.P.T. Water Condenser Inlet (water-cooled units)
(D) 3/8" (0.95 cm) F.P.T. Ice Making Water Inlet
(E) 1/2" (1.27 cm) F.P.T. Ice Making Water Drain
(F) 1/2" (1.27 cm) Auxiliary Base Drain Socket
(G) 3/4" (1.91 cm) Bin Drain
Air flow for air cooled models

Space-Saving Designs

	i-1400 B-970
Height	76.50" 194.31 cm
Width	48.00" 121.92 cm
Depth	34.00" 86.30 cm
Bin Storage	710 lbs. 322.2 kgs.

Height includes adjustable bin legs 6.00" to 8.00", (15.24 to 20.32 cm) set at 6.00" (15.24 cm).

Specifications

	Model	Ice Shape	Ice Production 24 Hours		Power Usage kWh/100 lbs. @90°Air/70°F		Water Usage/ 100 lbs. 45.4 kgs. of Ice	ENERGY STAR®
			70°Air/ 50°F Water	90°Air/ 70°F Water	1 Ph	3 Ph	Potable Water	
AIR-COOLED	ID-1402A	dice	1,500 lbs.	1,155 lbs.	4.86	4.86	23.5 gal.	
			682 kgs.	525 kgs.			89 L.	
	IY-1404A	half-dice	1,550 lbs.	1,180 lbs.	4.88	4.88	23.5 gal.	
			705 kgs.	536 kgs.			89 L.	
WATER-COOLED	ID-1403W	dice	1,515 lbs.	1,275 lbs.	3.85	3.85	23.5 gal.	NA
			689 kgs.	580 kgs.			89 L.	
	IY-1405W	half-dice	1,565 lbs.	1,290 lbs.	3.86	3.86	23.5 gal.	NA
			711 kgs.	586 kgs.			89 L.	
	* Water-cooled Condenser Water Usage / 100 lbs. /45.4 kgs. Of Ice: 154 gal. / 583 L. * Water-cooled models are excluded from ENERGY STAR qualification.							
REMOTE-COOLED	ID-1492N	dice	1,430 lbs.	1,220 lbs.	4.52	4.52	23.5 gal.	
			650 kgs.	555 kgs.			89 L.	
	IY-1494N	half-dice	1,480 lbs.	1,230 lbs.	4.53	4.53	23.5 gal.	
			673 kgs.	559 kgs.			89 L.	

Order ice machine and storage bin separately. To order 1 phase add "1" suffix to model # (ID-1402A1).

Accessories

Luminice™ Growth Inhibitor reduces yeast and bacteria growth for a cleaner ice machine.

Bin Level Control Allows ice bin level to be automatically set. Built-in LED light illuminates bin.

Arctic Pure® Water Filters Reduces sediment and chlorine odors for better tasting ice.

AuCS® schedules and performs routine ice machine cleaning automatically.

4929A ©2013 Manitowoc Ice, Inc. Continuing product improvement may necessitate change of specifications without notice.

2110 South 26th Street
PO Box 1720
Manitowoc, WI 54221-1720 USA

Tel: 1.920.682.0161
Fax: 1.920.683.7589
www.manitowocice.com

Manitowoc

ADVANCE TABCO.
SMART FABRICATION™

MIX & MATCH
ADJUSTABLE COMPONENTS
Stainless Steel
SHELVING - POT RACK - UTENSIL RACK

Convert Your Table into a Effective Work Station!

Maximize Your Work Area!

Our TABLE with POT RACK, SHELVING & UTENSIL RACK

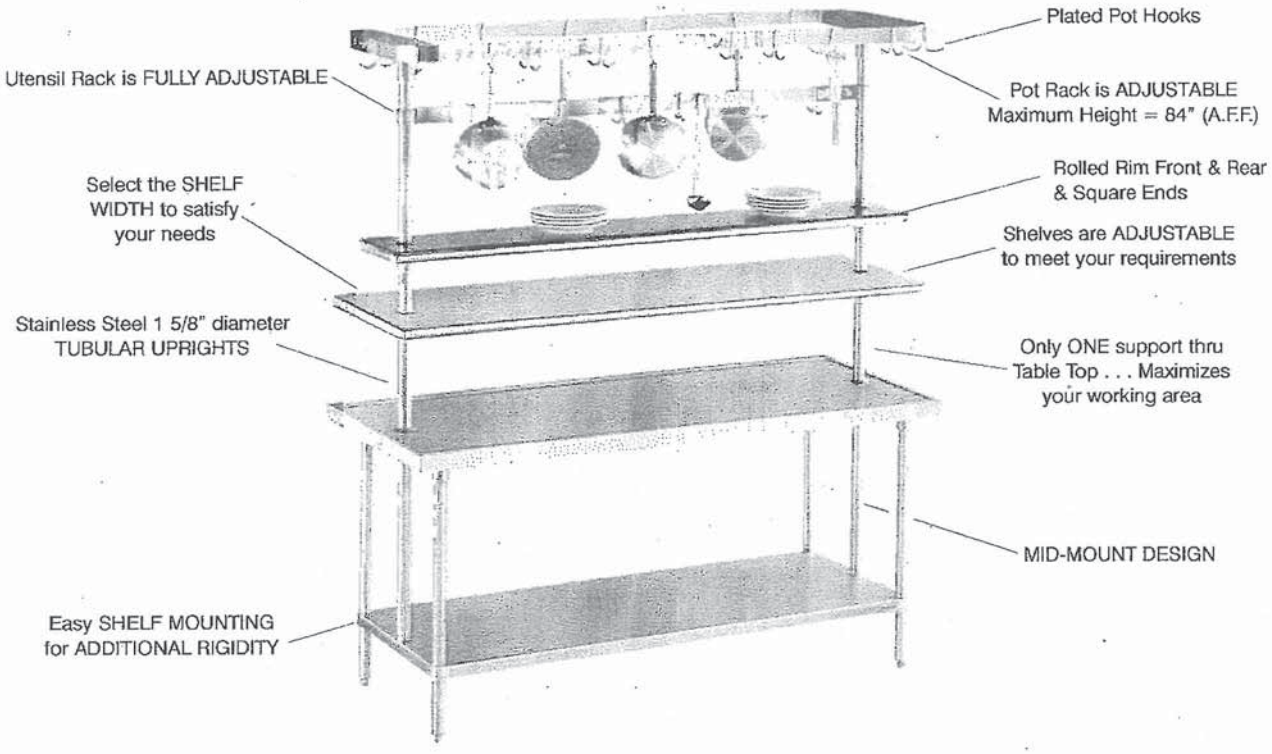

YES!!! . . . it's ADJUSTABLE

Mix & Match . . . . . **your choice. We offer 3 basic components: SHELF - POT RACK - UTENSIL RACK.**

The Adjustable Solution **components are adjustable. You set the height to meet your demanding requirements.**

Focus on Function . . . . . **available in 4 shelf widths, 2 pot rack styles, 10 lengths, and 1 utensil rack series.**

ADVANCE TABCO.
SMART FABRICATION™
www.advancetabco.com

Customer Service Available To Assist You 1-800-645-3166 8:30 am - 8:00 pm E.S.T.
Email Orders To: customer@advancetabco.com. For Smart Fabrication™ Quotes, Email To: smartfab@advancetabco.com or Fax To: 631-586-2933

NEW YORK Fax: (631) 242-6900
GEORGIA Fax: (770) 775-5625
TEXAS Fax: (972) 932-4795
NEVADA Fax: (775) 972-1578

DESIGNED & CONSTRUCTED so as to be a Self-Contained Unit

Possible ADJUSTABLE Shelves for ALL Standard ADVANCE TABCO TABLES

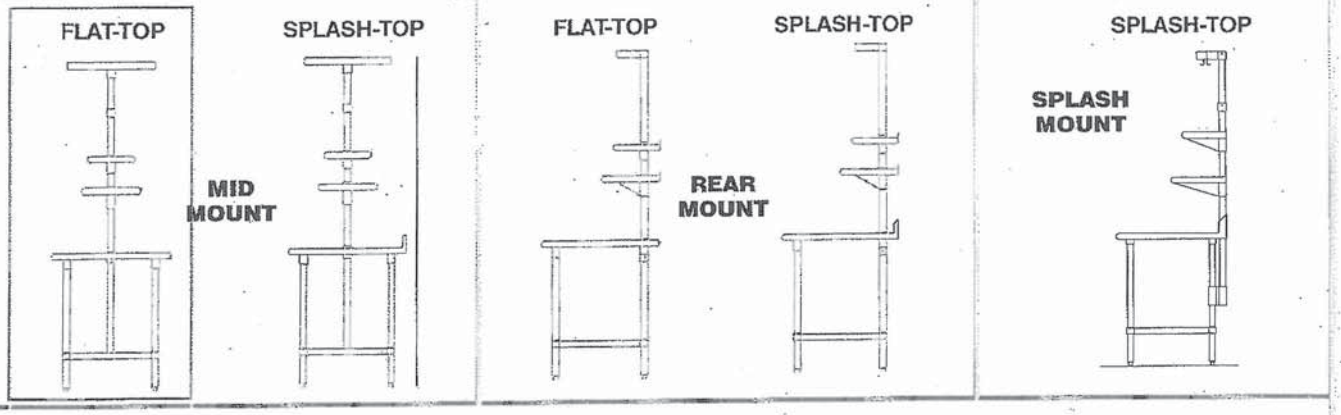

Also . . . . Adaptable to ALL ADVANCE TABCO Open - Base (less undershelf) Units.

SHELF SPECIFICATIONS:

REAR MOUNT & SPLASH MOUNT DESIGN:
Shelves feature a 1 1/2" splash on rear edge. Front edge has a rolled rim and square sides.

MID MOUNT DESIGN:
Shelves feature a rolled rim on front and rear & square sides.

TUBULAR UPRIGHT DIMENSIONS	
furnished with units requiring pot racks, shelves and utensil rack. (Dim. A.F.F.)	84"
furnished with units requiring ONLY shelving. (Dim. A.F.F.)	60"
furnished with units requiring field retrofit to include pot rack. Model TA-225 (ext. assembly)	24"
A.F.F. = Above Finished Floor.	

SINGLE POST DESIGN MAXIMIZES YOUR WORK AREA!

TABLE with OVERHEAD SHELVES

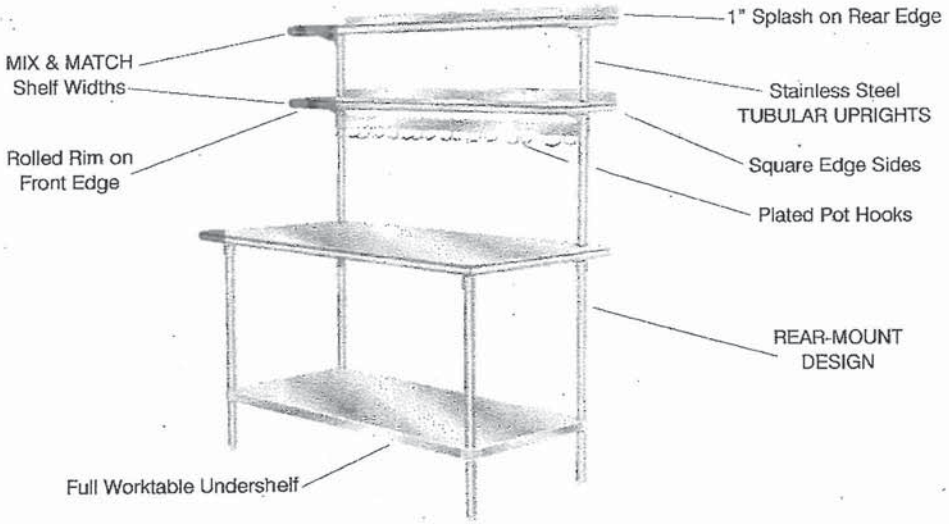

ADVANCE TABCO
SMART FABRICATION

ADVANCE TABCO is constantly engaged in a program of improving our products. Therefore, we reserve the right to change specifications without prior notice.

© ADVANCE TABCO, APRIL 2012

200 Heartland Boulevard, Edgewood, NY 11717-8380

ADVANCE TABCO.
SMART FABRICATION™

STAINLESS STEEL

WORK TABLES

STANDARD Series - Flat Top - UNDERSHELF Style

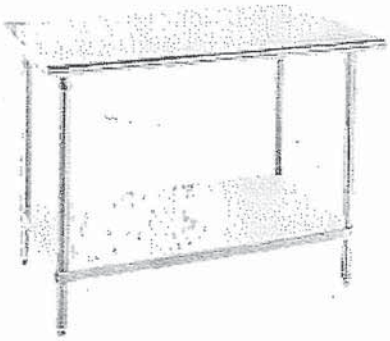

Item #: _____ *Qty #:* _____

Model #: _____

Project #: _____

NEW
Rolled Rim Edges on Front & Back and Square Side Edges

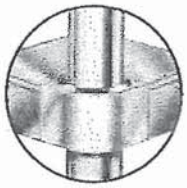

Featuring as Standard:
"THE PROVEN"
ORIGINAL ADVANCE TABCO
Adjustable Undershelf with Die Cast Leg Clamp

FEATURES:

Top is furnished with 1-5/8" sanitary rolled rim edges on front & back and square side edges.

To reinforce and maintain a level working surface, 24" wide tables are supplied with TWO hat channels and 30" and 36" wide tables are supplied with THREE hat channels.

Pre-engineered welded angle adapters insure ease of future drawer installation.

Aluminum die cast "leg-to-shelf" clamp secures shelf to leg eliminating unsightly nuts & bolts. Undershelf is adjustable.

CONSTRUCTION:

All TIG welded. Exposed weld areas polished to match adjacent surfaces.

Entire top mechanically polished to a satin finish.

Top is sound deadened.

Roll formed embossed galvanized hat channels are secured to top by means of structural adhesive and weld studs.

Gussets welded to support hat sections.

MATERIAL:

MS-SERIES: Stainless Steel Legs & Undershelf

TOP: 16 gauge stainless steel type "304" series.
SHELF: 18 gauge stainless steel.
LEGS: 1 5/8" diameter tubular stainless steel.
1" adjustable **stainless steel** bullet feet.
Stainless steel gussets.

MG-SERIES: Galvanized Legs & Undershelf

TOP: 16 gauge stainless steel type "304" series.
SHELF: 18 gauge galvanized steel.
LEGS: 1 5/8" diameter tubular galvanized steel.
1" adjustable plastic feet.
Galvanized steel gussets.

MS-Series:
Stainless Steel Legs & Undershelf

L	24" Wide	30" Wide	36" Wide
30"	MS-240	MS-300	
24"	MS-242	MS-302	
36"	MS-243	MS-303	MS-363
48"	MS-244	MS-304	MS-364
60"	MS-245	MS-305	MS-365
72"	MS-246	MS-306	MS-366
84"	MS-247	MS-307	MS-367
96"	MS-248	MS-308	MS-368
108"	MS-249	MS-309	MS-369
120"	MS-2410	MS-3010	MS-3610
132"	MS-2411	MS-3011	MS-3611
144"	MS-2412	MS-3012	MS-3612

NSF

MG-Series:
Galvanized Steel Legs & Undershelf

L	24" Wide	30" Wide	36" Wide
30"	MG-240	MG-300	
24"	MG-242	MG-302	
36"	MG-243	MG-303	MG-363
48"	MG-244	MG-304	MG-364
60"	MG-245	MG-305	MG-365
72"	MG-246	MG-306	MG-366
84"	MG-247	MG-307	MG-367
96"	MG-248	MG-308	MG-368
108"	MG-249	MG-309	MG-369
120"	MG-2410	MG-3010	MG-3610
132"	MG-2411	MG-3011	MG-3611
144"	MG-2412	MG-3012	MG-3612

Create Your Own Efficient Workstation with the Available Standard Accessories (Visit Section K)

ADVANCE TABCO.
SMART FABRICATION™
www.advancetabco.com

Customer Service Available To Assist You 1-800-645-3166 8:30 am - 8:00 pm E.S.T.
Email Orders To: customer@advancetabco.com. For Smart Fabrication™ Quotes, Email To: smartfab@advancetabco.com or Fax To: 631-586-2933

NEW YORK Fax: (631) 242-6900
GEORGIA Fax: (770) 775-5625
TEXAS Fax: (972) 932-4795
NEVADA Fax: (775) 972-1578

DIMENSIONS and SPECIFICATIONS

ALL DIMENSIONS ARE TYPICAL TOL ± .500"

All Units Shipped Unassembled (KD) for Reduced Shipping Costs.

MS & MG Series
UNDERSHELF Style
FLAT TOP

Finished size of undershelf = Length minus 5 3/4"
Width minus 5 3/4"

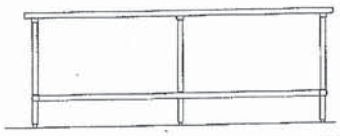

Units 8 ft. and larger are furnished with six (6) legs

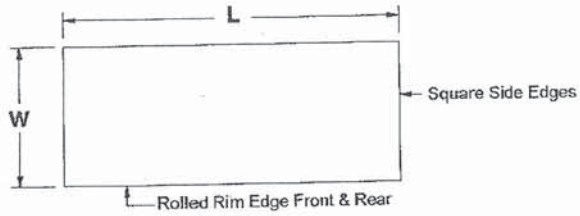

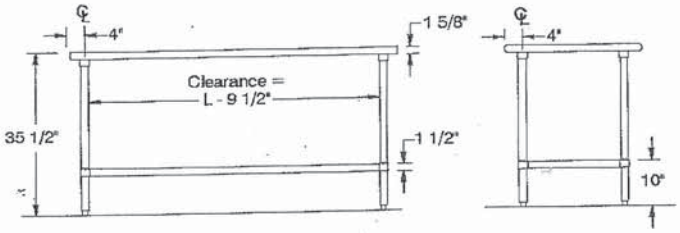

MS-Series: Stainless Steel Legs & Undershelf

L	24" Wide	Wt.	30" Wide	Wt.	36" Wide	Wt.
30"	MS-240	49 lbs.	MS-300	65 lbs.		
24"	MS-242	31 lbs.	MS-302	55 lbs.		
36"	MS-243	64 lbs.	MS-303	72 lbs.	MS-363	88 lbs.
48"	MS-244	79 lbs.	MS-304	89 lbs.	MS-364	98 lbs.
60"	MS-245	92 lbs.	MS-305	107 lbs.	MS-365	118 lbs.
72"	MS-246	109 lbs.	MS-306	125 lbs.	MS-366	138 lbs.
84"	MS-247	130 lbs.	MS-307	148 lbs.	MS-367	164 lbs.
96"	MS-248	145 lbs.	MS-308	166 lbs.	MS-368	184 lbs.
108"	MS-249	161 lbs.	MS-309	176 lbs.	MS-369	190 lbs.
120"	MS-2410	261 lbs.	MS-3010	287 lbs.	MS-3610	308 lbs.
132"	MS-2411	293 lbs.	MS-3011	324 lbs.	MS-3611	358 lbs.
144"	MS-2412	308 lbs.	MS-3012	339 lbs.	MS-3612	373 lbs.

MG-Series: Galvanized Steel Legs & Undershelf

L	24" Wide	Wt.	30" Wide	Wt.	36" Wide	Wt.
30"	MG-240	49 lbs.	MG-300	65 lbs.		
24"	MG-242	31 lbs.	MG-302	55 lbs.		
36"	MG-243	64 lbs.	MG-303	72 lbs.	MG-363	88 lbs.
48"	MG-244	79 lbs.	MG-304	89 lbs.	MG-364	98 lbs.
60"	MG-245	92 lbs.	MG-305	107 lbs.	MG-365	118 lbs.
72"	MG-246	109 lbs.	MG-306	125 lbs.	MG-366	138 lbs.
84"	MG-247	130 lbs.	MG-307	148 lbs.	MG-367	164 lbs.
96"	MG-248	145 lbs.	MG-308	166 lbs.	MG-368	184 lbs.
108"	MG-249	161 lbs.	MG-309	176 lbs.	MG-369	190 lbs.
120"	MG-2410	261 lbs.	MG-3010	287 lbs.	MG-3610	308 lbs.
132"	MG-2411	293 lbs.	MG-3011	324 lbs.	MG-3611	358 lbs.
144"	MG-2412	308 lbs.	MG-3012	339 lbs.	MG-3612	373 lbs.

ADVANCE TABCO.
SMART FABRICATION™
200 Heartland Boulevard, Edgewood, NY 11717-8380

ADVANCE TABCO is constantly engaged in a program of improving our products. Therefore, we reserve the right to change specifications without prior notice.

© ADVANCE TABCO, SEPTEMBER 2005

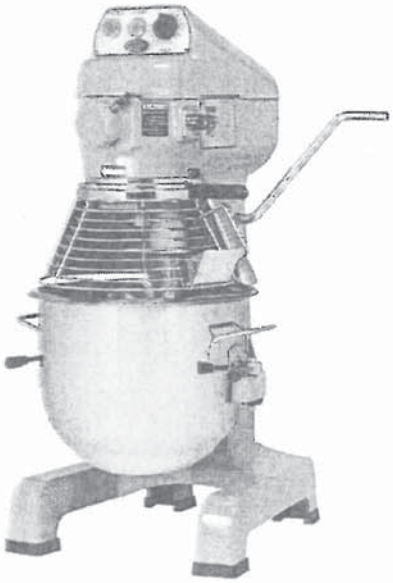

Model SP20

Globe®

precisely.

Model #:_____

Serial #:_____

Instruction Manual for Globe Mixers

Models SP10, SP20, SP25, SP30, SP30P, SP40, SP60, SP62P and SP80PL

For Service on Your Mixer:

1. Visit our website at ***www.globeslicers.com*** (select the Support / Parts drop down).
2. Or call the Globe service department at 937-297-7247 and ask for contact information for your local service company.

Visit our website for information on additional products available from Globe.

www.globeslicers.com

Slicers, Mixers, Vegetable Cutters, Meat Choppers and Scales

- IMPORTANT SAFETY NOTICE -

This manual contains important safety instructions which must be strictly followed when using this equipment.

Attention Owners and Operators

Globe's equipment is designed to provide safe and productive processing of food products as long as the equipment is used in accordance with the instructions in this manual and is properly maintained. Unless the operator is adequately trained and supervised there is a possibility of serious injury. Owners of this equipment bear the responsibility to make certain that this equipment is used properly and safely, strictly follow all the instructions contained in this manual and the requirements of local, state or federal law.

Owners should not permit anyone to touch this equipment unless they are over 18 years old, are adequately trained and supervised, and have read and understood this manual. Owners should also ensure that no customers, visitors or other unauthorized personnel come in contact with this equipment. Please remember that Globe cannot anticipate every circumstance or environment in which its equipment will be operated. It is the responsibility of the owner and the operator to remain alert to any hazards posed by the function of this equipment. If you are ever uncertain about a particular task or the proper method of operating this equipment, ask your supervisor.

This manual contains a number of precautions to follow to help promote safe use of this equipment. Throughout the manual you will see additional warnings to help alert you to potential hazards.

Warnings affecting your personal safety are indicated by:

⚠WARNING or ⚠

Warnings related to possible damage to the equipment are indicated by:

⚠CAUTION

Globe has put several warning labels in the English language on its mixers. French labels are also available and can replace the English labels at the owner's discretion. If the warning labels or this manual are misplaced, damaged, or illegible, or if you require additional copies, please contact your nearest representative or Globe directly for these items at no charge.

Please remember that this manual or the warning labels do not replace the need to be alert, to properly train and supervise operators, and to use common sense when using this equipment.

Installation

UNPACKING

Unpack the mixer immediately after receipt. If the machine is found to be damaged, save the packaging material and contact the carrier within fifteen (15) days of delivery. Immediately contact your source of the equipment. **You have no recourse to damage after fifteen (15) days.**

⚠WARNING

TO AVOID SERIOUS PERSONAL INJURY:

- **ALWAYS** install equipment in work area with adequate light and space.
- **ONLY** operate the mixer on a solid, LEVEL, non-skid surface that is nonflammable.
- **NEVER** bypass, alter, or modify this equipment in any way from its original condition. Doing so may create hazards and will void warranty.
- **NEVER** operate the mixer without all warnings attached to it.
- **DO NOT** attempt to lift the mixer alone.

INSTALLATION

1. Read this manual thoroughly before installation and operation. DO NOT proceed with installation and operation if you have any questions or do not understand anything in this manual. Contact your local representative or Globe first.

2. Remove the corrugated box from the skid by removing the bands on the box. NOTE: The SP62P and SP80PL are shipped in a wooden crate. Only the bolts at the bottom of the crate (all four sides) need to be removed.

3. Carefully unbolt the mixer from the skid using an 11/16" or 3/4" wrench.

4. Select a location for the mixer keeping these points in mind:
   - Floor or counter must be level.
   - Easy access for maintenance and service.
   - Clearance for operating controls, installing and removing agitators, bowl, or attachments.
   - Sufficient space for adding ingredients during mixing periods.
   - Ensure rear ventilation outlet of mixer is not blocked.

5. Use at least two other people to tilt the unit and install the rubber feet.

6. A bolt down template and bolts are available for the SP10, SP20, or SP25. Contact Globe if this is needed.

7. Inspect the mixer to ensure all parts have been provided (i.e. bowl, beater, whip, and dough hook). The SP62P only has a bowl and dough hook.

8. Read the electrical information found on the data plate located at the rear of the machine. The incoming power should match the rating on the data plate.

CONNECTING TO ELECTRICAL POWER ⚠WARNING

Cord Connected Units: This machine is provided with a three-prong grounding plug. The outlet that this plug is connected to must be properly grounded. If the receptacle is not the proper grounding type contact an electrician. Do not under any circumstances cut or remove the third ground prong from the power cord or use any adapter plug. Never use an extension cord. Low amp supply could damage the mixer or cause a fire.

2. To rotate the bowl guard to its open position, grasp the separated handles on the bowl guard and move them, together as one, clockwise to open/rotate the bowl guard. To close the bowl guard, grasp the separated handles and move them together as one, counterclockwise to close/rotate the bowl guard back into a locked position.

Removing and Attaching the Bowl Guard:

NOTE: Before removing or attaching the bowl guard, make sure the bowl is in the down/ lowered position and the agitator tool is off the shaft.

1. To remove the bowl guard for cleaning, push the lower part of the separated handle out (clockwise) dividing the handle and releasing the guard from the rotation ring. (see fig. 7-1)

2. Once separated, take hold of the lower separated handle and continue turning the guard clockwise until the bowl guard releases from the ring catch on the mixer. (see fig. 7-2)

3. To reattach the bowl guard, line up the ring catch on the left of the mixer; lift guard gently into place and rotate the guard's lower handle counterclockwise until it snaps back into place with the upper part of the handle.

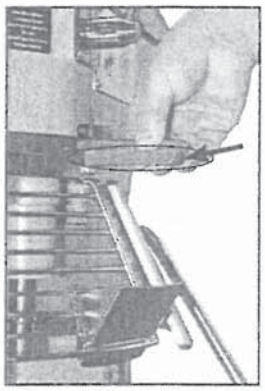
fig. 7-1

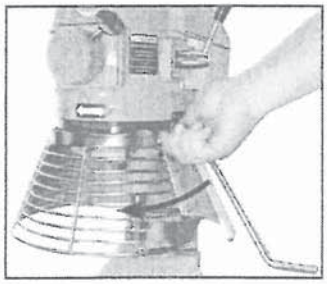
fig. 7-2

ATTACHING THE BOWL TO THE MIXER

NOTE: Install the bowl BEFORE attaching the agitators.

1. Lower the bowl by pulling the bowl lift lever forward and down to its resting position. For models SP40 and SP60 rotate the bowl lift wheel counterclockwise until it stops. For the SP62P and SP80PL press the down arrow (blue button) to lower the bowl until it stops.

2. Lift the bowl by the bowl handles and
   a. slowly position the locking pin (located on the rear of the bowl) into the hole in the middle rear of the cradle (see fig 7-3).
   b. lower the bowl onto the pins located on either side of the bowl cradle.

3. Once the bowl is positioned on the cradle, secure the bowl by pulling each bowl clamp forward until the bowl is locked tight (see fig 7-4).

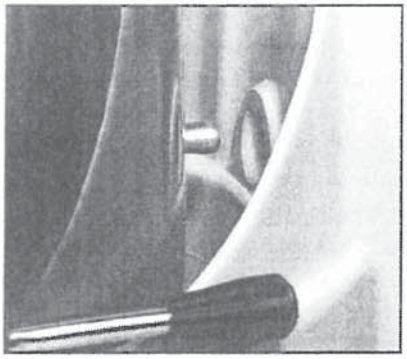
fig. 7-3

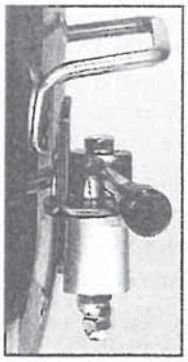
fig. 7-4

5. Select the appropriate speed setting by lifting or lowering the speed control lever. Three fixed speeds are available for use: first (1), second (2), and third (3). NOTE: The SP62P has two speeds and the SP80PL has four fixed speeds.

Gear Speed	Product Type/Ingredient
1 (low)	Heavy: mixing pizza, bread, pasta and donut doughs, waffle/cake batter, mashing potatoes
2 (medium)	Medium: 2nd stage of mixing for donut dough, etc.
3 (high)	Light: whipping cream, egg whites, meringue

IMPORTANT: When mixing product always follow the recommended agitator and speed setting according to the capacity chart located on page 13 of this manual.

6. Press the green start button located on the middle of the control panel.

⚠ CAUTION **Always STOP the mixer BEFORE changing speeds! Failure to do so may damage the gears or other parts and WILL void the warranty!**

7. To change the speed while mixing
   a. press the red stop button
   b. change the speed by raising or lowering the speed control lever
   c. press the green start button to restart the mixer.

NOTE: The SP62P and SP80PL will automatically shut off if the speed is changed while the mixer is in operation.

NOTE: The mixer is equipped with a motor overload protection. If the mixer shuts off during operation reduce the batch size and
   a. SP25 and smaller models: Press the stop button then press the overload reset button.
   b. Larger models: Wait **two** minutes. Press the stop button then press the start button.

NOTE: 2nd speed should never be used on 50% AR or lower with the exception of the SP60. The SP60 requires a 50% reduction in batch size to mix in speed 2 with 50% AR doughs.

NOTE: Reduce batch size by 10% if chilled flour, water below 70°F, ice, or high gluten flour is being used.

IMPORTANT: For heavier loads, the mixer should not run longer than fifteen minutes without pausing for a cool down period of at least fifteen minutes or more before resuming mixing. For lighter loads the mixer should not run longer than thirty minutes without pausing for a cool down period of at least thirty minutes or more before resuming mixing.

8. When the ingredients have been thoroughly mixed, press the red stop button to stop the mixer.
   NOTE: If the timer was used the mixer will automatically stop when the time has expired.

9. Lower the bowl by pulling the bowl lift lever forward and down to its resting position. For models SP40 and SP60, rotate the bowl lift wheel counterclockwise until it stops. For models SP62P and SP80PL press the down arrow (blue button) until the bowl stops.

10. Rotate the bowl guard to the left so it is in the open position.

11. Remove the agitator from the planetary shaft by lifting it upwards then rotating it counterclockwise until it is unlocked. Lower the agitator and remove from planetary shaft.

Cleaning Instructions

⚠ CAUTION

- Dilute detergent per supplier's instruction.
- **DO NOT** hose down or pressure wash any part of the mixer.
- **NEVER** use a scrubber pad, steel wool, or abrasive material to clean the mixer.
- **NEVER** use bleach (sodium hypochlorite) or bleach based cleaner.
- **ALWAYS** remove the agitator after each batch. If not, the agitator can become stuck on the shaft and difficult to remove.

⚠ **The entire mixer, including removable parts, must be thoroughly cleaned and sanitized using the procedures identified by your local health department and the ServSafe Essentials published by the National Restaurant Association Educational Foundation (NRAEF). Visit www.servsafe.com for more details.**

⚠ **It is extremely important to sanitize the mixer and to follow the instructions on the quaternary sanitizer container to ensure proper sanitation is achieved.**

⚠ ALWAYS DISCONNECT OR UNPLUG THE ELECTRICAL POWER FROM THE MIXER BEFORE CLEANING.

RECOMMENDED CLEANING

PART	REQUIRED ACTION	FREQUENCY
Agitators	Hand-wash using mild soap and water, rinse, dry and sanitize.	Clean after each use.
Removable Bowl Guard	Hand-wash using mild soap and water, rinse, dry and sanitize or place in dishwasher.	Clean after each use.
Bowl	Using a sponge or cloth, mild soap and water, apply pressure to ensure the bowl is clean, rinse, dry, and sanitize. The bowl can also be placed in a dishwasher.	Clean after each use.
Rear Splash Guard	Hand-wash using mild soap and water, rinse, dry and sanitize.	Clean after each use.
Bowl Cradle	Hand-wash using mild soap and water, rinse, dry and sanitize.	Daily
Planetary Shaft	Wipe with clean damp cloth, dry and sanitize. Apply a light quantity of Globe oil (mineral oil) to the planetary shaft after cleaning.	Clean after each use.
Exterior	Hand-wash using mild soap and water, rinse, dry, and sanitize. DO NOT use a water hose!	Daily
Hub Interior	Wipe with clean damp cloth, dry, and sanitize.	Daily

Capacity Chart

The following maximum capacities are intended as a guideline only. Varying factors such as the type of flour used, temperature of water used and other conditions may require the batch to be reduced.

Product	Agitator and Speed	SP5	SP8	SP10	SP20	SP25	SP30/ SP30P	SP40	SP60	SP62P	SP80PL
Waffle or Hotcake Batter	Flat Beater	2 qts.	3 qts.	5 qts.	8 qts.	10 qts.	12 qts.	16 qts.	24 qts.	----	30 qts.
Whipped Cream	Wire Whip	2 qts.	2 qts.	2 qts.	4 qts.	5 qts.	6 qts.	9 qts.	12 qts.	----	16 qts.
Mashed Potatoes	Flat Beater	4 lbs.	4 lbs.	8 lbs.	15 lbs.	18 lbs.	23 lbs.	30 lbs.	40 lbs.	----	50 lbs.
Egg Whites	Wire Whip	¾ pts.	¾ pts.	1 pt.	1 qt.	1¼ qts.	1½ qts.	1¾ qts.	2 qts.	----	2 qts.
Meringue (Qty. of Water)	Wire Whip	¼ pts.	½ pts.	¾ pts.	1½ pts.	1¾ pts.	1 qt.	1¼ qts.	1¾ qts.	----	3 qts.
Raised Donut Dough (65% AR) *◆	Dough Hook 1st and 2nd	2 lbs.	2 lbs.	4½ lbs.	9 lbs.	12 lbs.	15 lbs./ 20 lbs.	25 lbs.	60 lbs.	75 lbs.	80 lbs.
Heavy Bread Dough (55% AR) *•◆	Dough Hook 1st only	4 lbs.	3 lbs.	7½ lbs.	15 lbs.	20 lbs.	30 lbs./ 35 lbs.	40 lbs.	70 lbs.	75 lbs.	80 lbs.
Bread and Roll Dough (60% AR) *•◆	Dough Hook 1st only	5 lbs.	5 lbs.	12½ lbs.	25 lbs.	25 lbs.	45 lbs.	60 lbs.	80 lbs.	90 lbs.	90 lbs.
Pizza Dough, Thin (40% AR) *×•◆□	Dough Hook 1st only	3 lbs.	2 lbs.	5 lbs.	9 lbs.	12 lbs.	16 lbs./ 25 lbs.	30 lbs.	40 lbs. (1st)	50 lbs. 35 lbs. (2nd)	50 lbs.
Pizza Dough, Medium (50% AR) *•◆□	Dough Hook 1st only	4 lbs.	4 lbs.	5 lbs	10 lbs.	15 lbs.	25 lbs./ 36 lbs.	40 lbs.	70 lbs. (1st) 35 lbs. (2nd)	80 lbs. (1st) 60 lbs. (2nd)	90 lbs.
Pizza Dough, Thick (60% AR) *•◆	Dough Hook 1st only	5 lbs.	5 lbs.	10 lbs	20 lbs.	25 lbs.	40 lbs./ 45 lbs.	50 lbs.	70 lbs.	90 lbs.	100 lbs.
Fondant Icing	Flat Beater	4 lbs.	3 lbs.	6 lbs	12 lbs.	15 lbs.	18 lbs.	25 lbs.	36 lbs.	----	60 lbs.
Cake	Flat Beater	5 lbs.	6 lbs.	10 lbs.	20 lbs.	25 lbs.	30 lbs.	40 lbs.	60 lbs.	----	90 lbs.
Pie Dough	Flat Beater	5 lbs.	4 lbs.	10 lbs.	18 lbs.	22 lbs.	27 lbs.	35 lbs.	50 lbs.	60 lbs.	70 lbs.
Pasta, Basic Egg Noodle	Dough Hook	1 lb.	2 lbs.	3 lbs.	5 lbs.	6 lbs.	8 lbs./ 15 lbs.	17 lbs.	35 lbs.	40 lbs.	50 lbs.

* NOTE: The mixer capacity depends on the moisture content of the dough. When mixing doughs (pizza, bread, or bagels) check your AR%! %AR (% Absorption Ratio) = Water weight divided by flour weight. The capacities listed above are based on flour at room temperature and 70°F water temperature. (1 gallon of water weighs 8.33 lbs.)

× Maximum Mixing Time - 7 Minutes

• If high gluten flour is used, reduce the batch size by 10%.

◆ If using chilled flour, water below 70°F, or ice, reduce batch size by 10%.

□ 2nd speed should never be used on 50% AR or lower with the exception of the SP60. The SP60 requires a 50% reduction in batch size to mix in speed 2 with 50% AR doughs.

Do not use attachments on hub while mixing!

Troubleshooting

Problem	Possible Causes	Action Required
Mixing time is too long.	Three-phase mixer is wired wrong.	Agitators should rotate clockwise around bowl. If not, electrician must rewire.
	Batch size too small.	Increase batch size or use smaller bowl adapter kit. (*Contact dealer for purchase*)
	Incorrect recipe portions or temperatures.	Follow portions and temperatures per recipe instructions.
Bowl raise sticking or not operational.	Lack of lubrication on bowl slides.	Lubricate bowl slides with mineral oil or food quality grease. If still sticking, technician must clean bowl raise mechanism.
One or more gears not working.	Broken belt.	Technician to replace belt.
	Damaged or broken gear.	Technician to replace gear. ***Always stop mixer before shifting gears!***
Mixer will not mix medium or heavy loads.	Incorrect or low voltage.	Contact electrician.
	Belt slipping.	Technician to replace belt.
Residue leaking from hub.	Contaminated hub due to build-up of meat and/or vegetable juices (especially tomatoes).	Technician to remove hub and clean interior. To avoid problem, always wipe hub and dry after each use. **Note: Acid from tomato juices will corrode/ contaminate interior parts! Don't mix tomatoes in meat grinder!*
Agitators touching bottom or sides of bowl.	Defective or dented bowl.	Remove dents or replace bowl.
	Defective agitator.	Replace agitator.
Broken whip wires.	Batch size too large for mixer. Items too firm, speed too high.	Reduce batch size. (*See Capacity Chart*) Adjust recipe. Reduce speed.
	Hand utensil dropped into bowl while mixing.	Stop mixer before working on mixture.
Broken flat beater.	Ingredients too cold or too large (e.g. frozen butter, cream cheese cut in chunks).	Wait for ingredients to reach room temperature before mixing. Reduce chunk size.
Broken dough hook.	Batch size too large for mixer.	Reduce batch size. (*See Capacity Chart*) Adjust recipe.
	Ingredients too cold or too large.	Wait for ingredients to reach room temperature before mixing. Reduce chunk size.
Mixture climbs up dough hook.	Three-phase mixer is wired incorrectly.	Electrician to rewire.
Discoloration of mixed product.	Bowl has not been thoroughly cleaned.	Clean bowl again (refer to page 11).

ADVANCE TABCO.
SMART FABRICATION™

STAINLESS STEEL

MIXER TABLES

(Optional Casters Shown)

Item #: _____ ***Qty #:*** _____

Model #: _____

Project #: _____

UTENSIL RACK & UNDERSHELF

Width x Length	S/S Base	Galv. Base	Weight
24" x 24"	MX-SS-242	MX-GL-242	53 lbs.
30" x 24"	MX-SS-302	MX-GL-302	63 lbs.
30" x 30"	MX-SS-300	MX-GL-300	77 lbs.
30" x 36"	MX-SS-303	MX-GL-303	77 lbs.
36" x 36"	MX-SS-363	MX-GL-363	85 lbs.

WITH UNDERSHELF

Width x Length	S/S Base	Galv. Base	Weight
24" x 24"	MT-SS-242	MT-GL-242	53 lbs.
30" x 24"	MT-SS-302	MT-GL-302	63 lbs.
30" x 30"	MT-SS-300	MT-GL-300	77 lbs.
30" x 36"	MT-SS-303	MT-GL-303	77 lbs.
36" x 36"	MT-SS-363	MT-GL-363	85 lbs.

BUDGET SERIES WITH UNDERSHELF

Width x Length	S/S Base	Galv. Base	Weight
24" x 24"	SAG-MT-242	AG-MT-242	53 lbs.
30" x 24"	SAG-MT-302	AG-MT-302	63 lbs.
30" x 30"	SAG-MT-300	AG-MT-300	77 lbs.
30" x 36"	SAG-MT-303	AG-MT-303	77 lbs.
36" x 36"	SAG-MT-363	AG-MT-363	85 lbs.

FEATURES:

TOP is furnished with a 2" x 1" square die embossed NO-DRIP countertop offset edge with a 1/2" return on 4 sides.

Aluminum die cast "leg-to-shelf" clamp secures shelf to leg eliminating unsightly nuts and bolts. Undershelf is adjustable.

MATERIAL:

MX-SS & MT-SS SERIES - Stainless Steel Base

TOP is 14 gauge stainless steel type "304" series with galvanized understructure.

UNDERSHELF is 18 gauge stainless steel.

LEGS are 1 5/8" diameter tubular stainless steel with stainless steel bullet feet & gussets.

UTENSIL RACK on MX-SS Series is 1 5/8" dia. stainless steel tubing with stainless steel hooks.

MX-GL & MT-GL Series - Galvanized Steel Base

TOP is 14 gauge stainless steel type "304" series with galvanized understructure.

UNDERSHELF is galvanized steel.

LEGS are 1 5/8" diameter, tubular galvanized steel. Gussets are galvanized steel with 1" adjustable plastic bullet feet.

UTENSIL RACK on MX-SS Series is 1 5/8" diameter galvanized steel tubing with stainless steel hooks.

SAG-MT & AG-MT Budget Series

TOP is heavy gauge stainless steel type "430" series with galvanized understructure.

SAG-MT Series UNDERSHELF is 18 gauge stainless steel.
AG-MT Series UNDERSHELF is galvanized steel.

SAG-MT Series LEGS are 1 5/8" diameter, tubular stainless steel. Gussets are stainless steel. 1" adjustable stainless steel bullet feet.

AG-MT Series LEGS are 1 5/8" diameter, tubular galvanized steel. Gussets are galvanized steel. 1" adjustable plastic bullet feet.

CONSTRUCTION:

All TIG welded. Exposed weld areas polished to match adjacent surface.

Entire Top is mechanically polished to a satin finish and is sound deadened. Countertop edge polished to a MIRROR FINISH.

Roll formed embossed galvanized hat channels are secured to top by means of structural adhesive and weld studs.

Gussets welded to support hat channels.

ADVANCE TABCO.
SMART FABRICATION™
www.advancetabco.com

Customer Service Available To Assist You 1-800-645-3166 8:30 am - 8:00 pm E.S.T.
Email Orders To: customer@advancetabco.com. For Smart Fabrication™ Quotes, Email To: smartfab@advancetabco.com or Fax To: 631-586-2933

NEW YORK Fax: (631) 242-6900
GEORGIA Fax: (770) 775-5625
TEXAS Fax: (972) 932-4795
NEVADA Fax: (775) 972-1578

DETAILS and SPECIFICATIONS

ALL DIMENSIONS ARE TYPICAL

TOL ± .500"

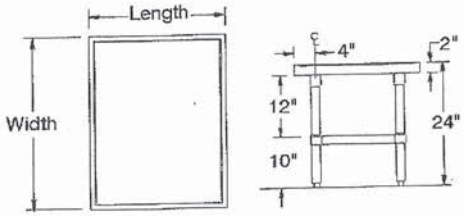

MT, SAG & AG Series

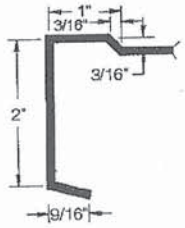

Countertop Edge Detail

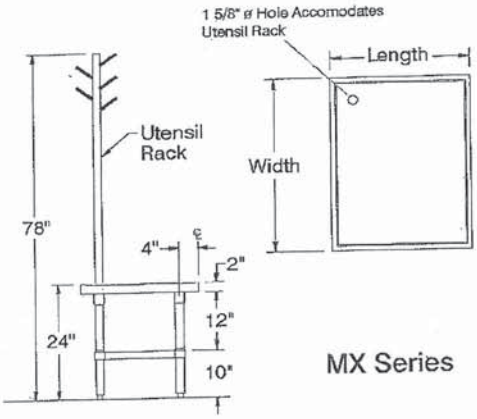

MX Series

ADVANCE TABCO is constantly engaged in a program of improving our products. Therefore, we reserve the right to change specifications without prior notice.

© ADVANCE TABCO, SEPTEMBER 2005

Item # _____

Quantity _____

C.S.I. Section 11400

HOBART
701 S Ridge Avenue, Troy, OH 45374
1-888-4HOBART • www.hobartcorp.com

2912 SLICER

STANDARD FEATURES

- Variable Six-Speed Automatic Carriage with Front Mounted Controls
- Home Position Start
- Close To Stop
- Gauge Plate Interlock
- Carriage System Interlock
- No Volt Release
- Exclusive Tilting, Removable Carriage System
- CleanCut™ Knife
- Top Mounted Borazon Stone Sharpener
- Hobart Poly V-Belt Drive System
- Sanitary Anodized Aluminum Base
- Double-Action Indexing Cam
- Permanently Mounted Ring Guard
- Heavy Gauge Stainless Steel Knife Cover
- Lift Lever
- Removable Rear Deflector
- ½ H.P. Knife Drive Motor
- Nylon Carriage Roller
- Electroless Nickel Plated Single Slide Rod with Reservoir Wick
- Stainless Steel Carriage
- Ergonomic Style Handle
- Low Fence

MODEL

- ❑ 2912 – Smart Feature Automatic Slicer

ACCESSORIES

- ❑ Low Fence
- ❑ High Fence
- ❑ Food Chute
- ❑ Heavy Meat Grip
- ❑ Tall Legs
- ❑ Product Tray

Specifications, Details and Dimensions on Inside and Back.

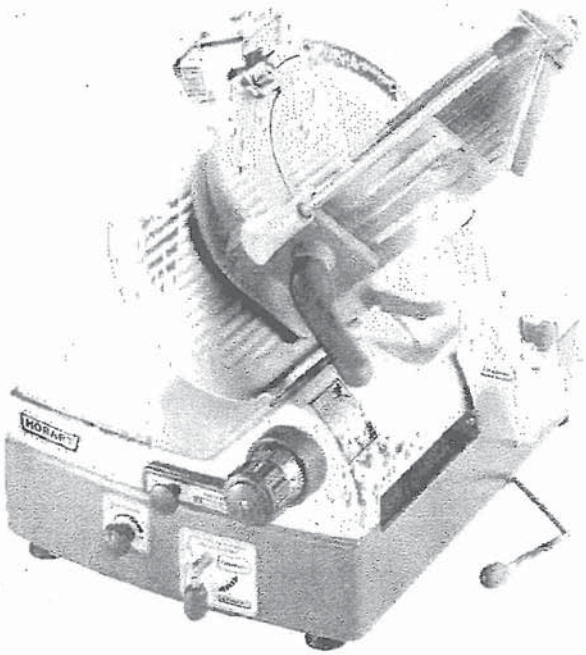

HOBART

2912 SLICER

HOBART
701 S Ridge Avenue, Troy, OH 45374
1-888-4HOBART • www.hobartcorp.com

SOLUTIONS / BENEFITS

Variable Six-Speed Automatic Carriage with Front Mounted Controls
Improved yield, labor savings
- Greater flexibility for all slicing needs
- Six speed choices for 28, 33, 38, 42, 47, and 52 strokes per minute

Home Start Position
Maximizes yield
- Carriage must be in "home position" before the slicer will start

Close To Stop
Convenience, labor savings, energy savings
- Closing of gauge plate turns off the slicer

Gauge Plate Interlock
Supports use of proper cleaning procedures, easier to clean
- Gauge plate must be closed to remove carriage for cleaning and cannot be opened when removed

Carriage System Interlock
- Will not tilt away or remove if gauge plate indicator is not closed

No Volt Release
Protects against unintentional starting of slicer
- Slicer must be restarted if power fails or slicer is unplugged

Exclusive Tilting, Removable Carriage System
Reduces labor, improves sanitation
- Tilt design allows for ease of midday cleaning
- Removable for complete cleaning and sanitation procedures

CleanCut™ Knife
Reduced cost of ownership, improved yield
- Thin edge design improves yield
- Super alloy edge lasts longer
- Fewer and shorter sharpenings required

Top Mounted Borazon Stone Sharpener
Ease of use, improved sanitation, reduced costs
- Single action sharpens and hones in just five seconds
- Removable and submersible for easy cleaning and sanitation
- Lifetime guaranteed Borazon sharpening stones provide maximum performance with reduced maintenance costs

Poly V-Belt Drive System
Performance, durability, reduced maintenance
- Patented design extends belt life while producing optimum slicing results
- Quieter operating slicer

Sanitary Anodized Aluminum Base
Improved sanitation, labor savings
- One piece base protects against possible growth of bacteria
- No cracks/crevices or bolt holes where product can lodge and bacteria may grow
- Easy cleanup and durable finish

Double-Action Indexing Cam
Increases reliability, easier to use, increased yield
- The first full revolution of the indexing knob provides precise control for shaving, chipping and thin slicing
- The second revolution opens the gauge plate quickly for thicker slicing
- Gauge plate holds position for consistent, precision slicing

Permanently Mounted Ring Guard
Protection
- Protects knife during operation and cleaning

Heavy Gauge Stainless Steel Knife Cover
Durability, ease of use, sanitation
- Twelve-gauge stainless steel maintains shape to ensure consistent fit
- Spring loaded knob for quick removal and easy cleanup
- One piece design for simplistic usage

Lift Lever
Improved sanitation, ease of use
- Props machine for easy cleaning underneath slicer

Removable Rear Deflector
Improved sanitation, ease of use
- Allows access for thorough cleaning
- No tools required means easy removal during cleaning

½ H.P. Knife Drive Motor
Durability, performance
- Reserve power runs at 400 rpm for optimum results

Nylon Carriage Roller
Performance
- Easy movement for manual operation

Electroless Nickel Plated Single Slide Rod with Reservoir Wick
Performance, durability, lower maintenance
- Smooth operation with continuous lubrication of carriage rod
- Resistant to rust

Stainless Steel Carriage
Improved sanitation, durability
- Maximum sanitation with minimum cleanup time
- Corrosion resistant, impact resistant

Ergonomic Style Handle
Operator satisfaction
- Comfortable manual operation

Meat Grip Options
Multiple choices for improved yield and consistency
- Front meat grip standard
- Heavy front meat grip available

SPECIFICATIONS

VARIABLE SIX-SPEED AUTOMATIC CARRIAGE WITH FRONT MOUNTED CONTROLS: Choice of six speeds - 28, 33, 38, 42, 47, 52 strokes per minute. Carriage can be disengaged from power drive whether slicer is in operation or not. Automatic engagement and speed selector controls located in front of machine. Speed can be changed with slicer motor on or off. Carriage driven by DC gear-reduction motor and 4 bar synchronous linkage.

HOME POSITION START: Home-start ensures carriage is in a convenient position before starting the slicer.

CLOSE TO STOP: After slicing, a quick turn of the index knob to the closed position turns off the slicer.

GAUGE PLATE INTERLOCK: Gauge plate interlock protects knife edge when indicator is at zero.

CARRIAGE SYSTEM INTERLOCK: Carriage will not tilt away or remove if gauge plate indicator is not closed.

NO VOLT RELEASE: In the event of power loss, slicer must be restarted before operation can continue.

TILTING REMOVABLE CARRIAGE SYSTEM: Positive angle carriage design enables operator to slice without manual feed. The stainless steel carriage system tilts back easily for midday cleaning and is removable for thorough cleaning and sanitation procedures. The carriage has 12½" manual travel.

CLEANCUT™ KNIFE: Another Hobart exclusive, the knife is constructed of 304L stainless steel and high performance super alloy. Knife is protected by a permanently mounted ring guard with integrated product deflector. The stainless steel knife cover provides easy access for cleaning. Gauge plate protects knife edge when indicator is closed. Knife cover is quickly removed with a quarter turn of the spring loaded locking knob.

TOP MOUNTED BORAZON STONE SHARPENER: One lever operation utilizing two Borazon stones to sharpen and hone in five seconds. Removable and top mounted. When sharpener is removed for cleaning, knife edge is shielded. Borazon stones have lifetime guarantee.

HOBART POLY V-BELT DRIVE SYSTEM: Knife is driven by a Hobart Poly V belt and runs at 400 rpm for optimal performance.

SANITARY ANODIZED ALUMINUM BASE: One-piece base protects against possible growth of bacteria. All surfaces are durable and smooth, presenting no holes or crevices in which food can lodge.

DOUBLE-ACTION INDEXING CAM: First revolution of index cam for precision slicing; second revolution for thicker slicing selection. Indexing cam holds true to setting during slicing operation.

PERMANENTLY MOUNTED RING GUARD: Permanently mounted ring guard with integrated product deflector protects knife.

HEAVY GAUGE STAINLESS STEEL KNIFE COVER: One piece design made of 12 gauge stainless steel, durable to maintain shape and ensure consistent fit. Spring loaded for quick removal and replacement.

LIFT LEVER: Lift lever facilitates raising slicer to tilted position for cleaning beneath the machine.

REMOVABLE REAR DEFLECTOR: No tools are required for removal of the deflector for thorough cleaning of the slicer.

KNIFE MOTOR: ½ H.P., permanently lubricated ball bearings. Single phase capacitor-start, induction run.

ELECTROLESS NICKEL PLATED SINGLE SLIDE ROD WITH RESERVOIR WICK: Transport slide rod is E-Nickel electroless plated. Slide rod bearings feature an oil reservoir/oil wick.

FINISH: Stainless steel carriage, gauge plate and knife cover. Anodized aluminum base.

ERGONOMIC STYLE HANDLE: Specially designed for ease of use during manual operation.

MEAT GRIP: Front mounted grip is high strength thermoplastic. Swings out of way when not in use.

ELECTRICAL SPECIFICATIONS: 120/60/1 – U L Listed. Also available in 100/50/60/1, 240/60/1 (3 amps) and 230/50/1 (3 amps) – not submitted for U L Listing.

SWITCH: Moisture protected toggle type, operated by a push-pull rod.

CORD & PLUG: 6-foot, three-wire power supply cord and plug. Plug not furnished on export models.

CAPACITY: The carriage will take food up to 12" in width or 7½" in diameter.

GAUGE PLATE: Gauge plate is a heavy aluminum casting with ribbed laminated stainless steel face for smooth feeding. Adjustable to cut any thickness of slice up to 1".

WARRANTY: All parts and service coverage for one year including knife. Lifetime guarantee on Borazon stones in the sharpening system.

WEIGHTS FOR THE FOLLOWING ITEMS: Tubular Chute 9.1 lbs.; Swing Arm .61 lbs.; Heavy Front Meat Grip 2.76 lbs.; Heavy Handle 2.7 lbs.; Standard Meat Grip 2.34 lbs.

WEIGHT: Shipping 182 lbs., Net 140 lbs.

HOBART
701 S Ridge Avenue, Troy, OH 45374
1-888-4HOBART • www.hobartcorp.com

DETAILS AND DIMENSIONS

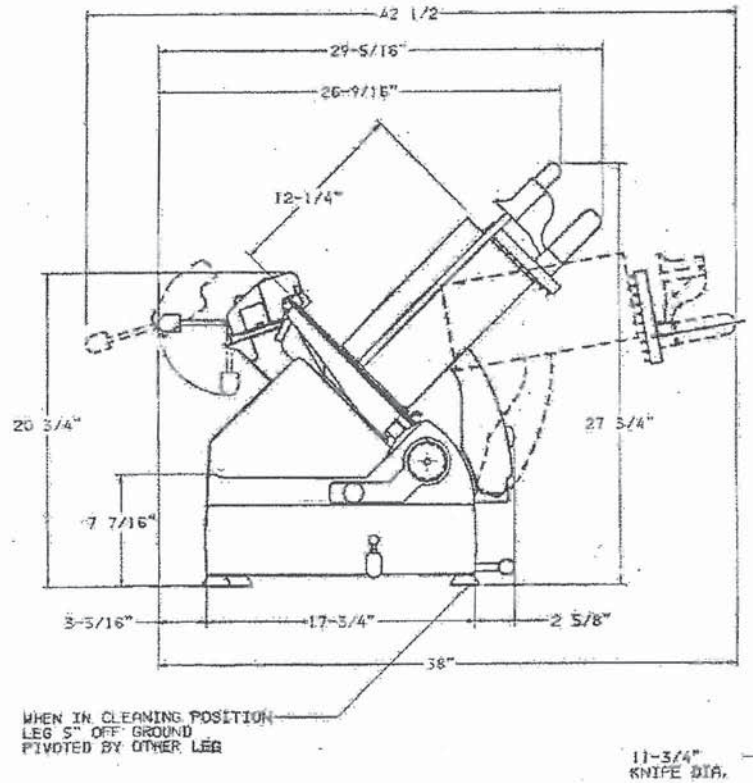

WARNING

ELECTRICAL AND GROUNDING CONNECTIONS MUST COMPLY WITH THE APPLICABLE PORTIONS OF THE NATIONAL ELECTRICAL CODE AND/OR OTHER LOCAL ELECTRICAL CODES.

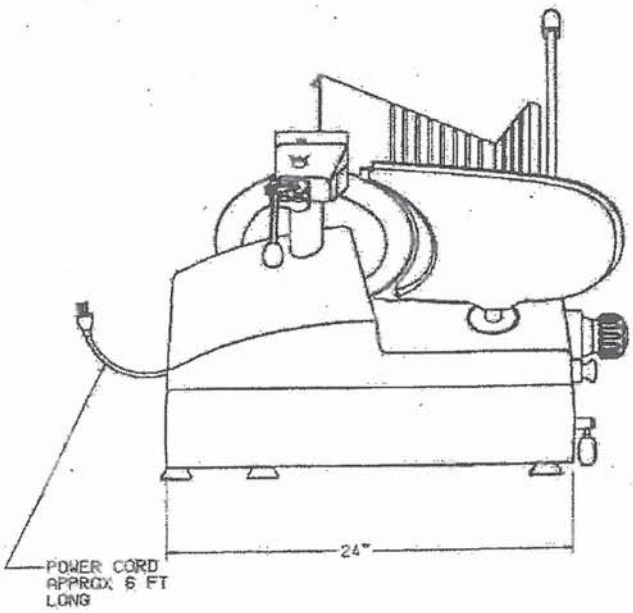

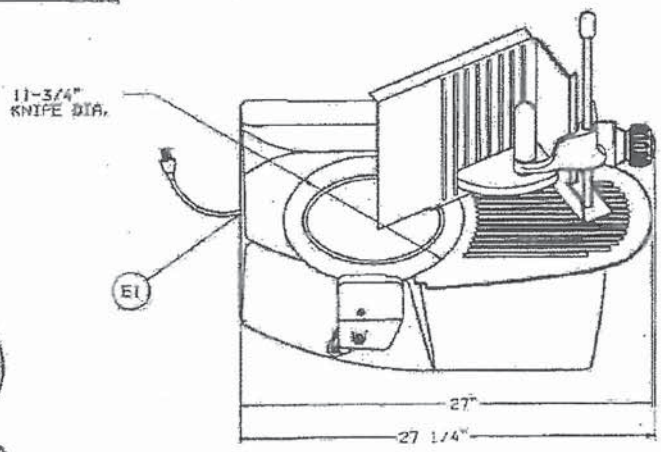

LEGEND
E1-ELECTRICAL CONNECTION, APPROX 6½" ABOVE COUNTER TOP

As continued product improvement is a policy of Hobart, specifications are subject to change without notice.

(67)

Product Search »

Home | Products | Warranty | Support | Marketing

SELECT A PRODUCT

- Traditional Reach-Ins
  - T Series
    - Solid Door Refrigerators
    - Pass-Thru Refrigerators
    - Glass Door Refrigerators
    - Half-Door Refrigerators
    - Solid Door -10°F Freezers
    - Solid Door 0°F Freezers
    - Glass Door -10°F Freezers
    - Solid Half Door -10°F Freezers
    - Slide Door Refrigerators
    - Dual Temperature
    - Heated Cabinets
  - TS Series
- Specification Series
- Food Prep Tables
- Undercounters
- Worktops
- Chef Bases

Solid Door 0°F Freezers

T-19FZ

True's solid door reach-in's are designed with enduring quality that protects your long term investment.

Designed using the highest quality materials and components to provide the user with colder product temperatures, lower utility costs, exceptional food safety and the best value in today's food service marketplace.

Extra large evaporator coil balanced with higher horsepower compressor and large condenser maintains 0°F (-18°C)

Read More

T-19FZ

Click Here for Spec Sheet
Click Here for CAD Drawing

Doors	Shelves	Cabinet Dimensions (inches)			HP	Voltage	Amps	Crated Weight (lbs.)
		L	D	H				
1	3	27	24–1/2	75–1/4	1/3	115/60/1	6.8	250

« »

T-19FZ

Results Found: 1

Copyright © 2012 True Manufacturing

68
69

Product Search »

Home | Products | Warranty | Support | Marketing

SELECT A PRODUCT

- Traditional Reach-Ins
  - T Series
    - Solid Door Refrigerators
    - Pass-Thru Refrigerators
    - Glass Door Refrigerators
    - Half-Door Refrigerators
    - Solid Door -10°F Freezers
    - Solid Door 0°F Freezers
    - Glass Door -10°F Freezers
    - Solid Half Door -10°F Freezers
    - Slide Door Refrigerators
    - Dual Temperature
    - Heated Cabinets
  - TS Series
- Specification Series
- Food Prep Tables
- Undercounters
- Worktops
- Chef Bases

Solid Door Refrigerators

T-35

True's solid door reach-in's are designed with enduring quality that protects your long term investment.

Designed using the highest quality materials and components to provide the user with colder product temperatures, lower utility costs, exceptional food safety and the best value in today's food service marketplace.

Oversized, factory balanced, refrigeration system holds 33°F to 38°F (.5°C to 3.3°C) for the best in food preservation.

Read More

T-35

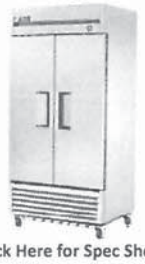

Click Here for Spec Sheet
Click Here for CAD Drawing

Doors	Shelves	Cabinet Dimensions (inches)			HP	Voltage	Amps	Crated Weight (lbs.)
		L	D	H				
2	6	39–1/2	29–1/2	78–3/8	1/3	115/60/1	7.3	370

« T-12 T-19 T-23 T-35 T-43 T-49 T-72 »

Results Found: 7

Bev Distributors | Contact Us | About Us | Careers | Parts eStore | Serial No. Inquiry

Privacy Policy

Copyright © 2012 True Manufacturing

Terms & Conditions

Job _____

SUPER ADJUSTABLE™ SUPER ERECTA SHELF®

WIRE SHELVING

Dimensions

Super Adjustable™ Super Erecta Wire Shelving

Model No. Chrome	Model No. Metroseal 3	Model No. Stainless	Shelf Width/Length (in.)	(mm)	Approx. Pkd. Wt. (lbs.)	(kg)
A1424NC	A1424NK3	A1424NS	14x24	355x610	6	2.7
A1430NC	A1430NK3	A1430NS	14x30	355x760	7	3.2
A1436NC	A1436NK3	A1436NS	14x36	355x914	8	3.6
A1442NC	A1442NK3	A1442NS	14x42	355x1066	9½	4.3
A1448NC	A1448NK3	A1448NS	14x48	355x1219	10½	4.7
A1460NC	A1460NK3	A1460NS	14x60	355x1524	14	6.3
A1472NC	A1472NK3	A1472NS	14x72	355x1829	17	7.7
A1824NC	A1824NK3	A1824NS	18x24	457x610	7	3.2
A1830NC	A1830NK3	A1830NS	18x30	457x760	8	3.6
A1836NC	A1836NK3	A1836NS	18x36	457x914	9½	4.3
A1842NC	A1842NK3	A1842NS	18x42	457x1066	11	5.0
A1848NC	A1848NK3	A1848NS	18x48	457x1219	12	5.4
A1854NC	A1854NK3	A1854NS	18x54	457x1370	14½	6.6
A1860NC	A1860NK3	A1860NS	18x60	457x1524	17	7.7
A1872NC	A1872NK3	A1872NS	18x72	457x1829	20	9.1
A2124NC	A2124NK3	A2124NS	21x24	530x610	8	3.6
A2130NC	A2130NK3	A2130NS	21x30	530x760	9	4.1
A2136NC	A2136NK3	A2136NS	21x36	530x914	11	5.0
A2142NC	A2142NK3	A2142NS	21x42	530x1066	12	5.4
A2148NC	A2148NK3	A2148NS	21x48	530x1219	14	6.4
A2154NC	A2154NK3	A2154NS	21x54	530x1370	16	7.3
A2160NC	A2160NK3	A2160NS	21x60	530x1524	18	8.2
A2172NC	A2172NK3	A2172NS	21x72	530x1829	24	10.9
A2424NC	A2424NK3	A2424NS	24x24	610x610	9	4.1
A2430NC	A2430NK3	A2430NS	24x30	610x760	11	5.0
A2436NC	A2436NK3	A2436NS	24x36	610x914	13	5.9
A2442NC	A2442NK3	A2442NS	24x42	610x1066	15	6.8
A2448NC	A2448NK3	A2448NS	24x48	610x1219	16	7.3
A2454NC	A2454NK3	A2454NS	24x54	610x1370	18	8.6
A2460NC	A2460NK3	A2460NS	24x60	610x1524	21	9.5
A2472NC	A2472NK3	A2472NS	24x72	610x1829	26	11.8
A3036NC		A3036NS	30x36	760x914	15	6.8
A3048NC		A3048NS	30x48	760x1219	21	9.5
A3060NC		A3060NS	30x60	760x1524	26½	11.8
A3072NC		A3072NS	30x72	760x1829	31	14.0
A3636NC		A3636NS	36x36	914x914	18	8.2
A3648NC		A3648NS	36x48	914x1219	23	10.4
A3660NC		A3660NS	36x60	914x1524	29	13.1
A3672NC		A3672NS	36x72	914x1829	34½	15.4

NOTE: MICROBAN® protects the Metroseal 3 coating from bacteria, mold, mildew and fungi that cause odors, stains and product degradation. For Metroseal 3 shelving information see sheet #10.10A.

All Environments — Metroseal 3™ with *Microban® Antimicrobial Product Protection

Mobile Options

Stem Casters

Dolly Trucks

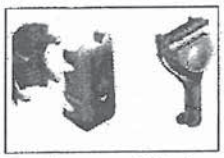

Replacement Parts
Each kit includes components for one original Super Adjustable or Super Adjustable shelf; (4) wedges, (4) sleeves, (4) shelf releases.
Model No. SAKITA2

SiteSelect™ Posts

STATIONARY Actual Height* (in.)	(mm)	Model No. Plated	Model No. Metroseal 3	Model No. Stainless	MOBILE Actual Height* (in.)	(mm)	Model No. Plated	Model No. Metroseal 3	Model No. Stainless	Approx. Pkd. Wt. (lbs.)	(kg)
7⅜	187	7P	7PK3	7PS	6¾	171	7UP	7UPK3	7UPS	½	0.3
14⅜	365	13P	13PK3	13PS	13¾	349	13UP	13UPK3	13UPS	1	0.5
28⅜	720	27P	27PK3	27PS	27¾	704	27UP	27UPK3	27UPS	1¾	0.75
34⅜	873	33P	33PK3	33PS	33¾	857	33UP	33UPK3	33UPS	2	0.9
54 7/16	1382	54P	54PK3	54PS	53 13/16	1366	54UP	54UPK3	54UPS	3	1.4
62 7/16	1585	63P	63PK3	63PS	61 13/16	1570	63UP	63UPK3	63UPS	3½	1.6
—	—	—	—	—	69¾	1771	70UP	—	—	3¾	1.7
74½	1892	74P	74PK3	74PS	73⅞	1876	74UP	74UPK3	74UPS	4	1.8
86½	2197	86P	86PK3	86PS	85⅞	2181	86UP	86UPK3	86UPS	4½	2.0
96½	2450	**96P	96PK3	96PS						5½	2.5

*Actual height for the stationary post includes the post cap and the leveling bolt completely tightened.

Important: When ordering by components remember that for maximum stability, units should be kept as wide and low as possible.

All Metro Catalog Sheets are available on our Web Site: **www.metro.com**

InterMetro Industries Corporation
North Washington Street, Wilkes-Barre, PA 18705
Phone: 570-825-2741 • Fax: 570-825-2852

For Product Information:
U.S. and Canada: 1-800-992-1776
Outside U.S. and Canada: www.metro.com/contactus

L02-006A
Printed in U.S.A. Rev. 4/11

Information and specifications are subject to change without notice. Please confirm at time of order.

Copyright © 2011 InterMetro Industries Corp.

Item # _____

Job _____

SUPER ADJUSTABLE™ SUPER ERECTA SHELF®
WIRE SHELVING

Super Adjustable™ Super Erecta Wire Shelving is the most advanced and innovative wire storage system available.

- **Maximum Space Utilization:** The Corner Release System encourages repositioning of shelves during initial assembly to reclaim wasted vertical space. In some cases, reclaimed vertical space will allow an extra shelving tier to be added to the storage unit resulting in a 25% increase in storage capacity!
- **Easily Assembled:** The unique Corner Release System enables quick and easy repositioning of shelves during the initial set up to accommodate different package or container sizes. "Total Assembly" is complete only after the shelves are properly spaced to maximize storage. SiteSelect™ Posts, with the double-groove visual guide feature, have circular grooves at 1" (25mm) increments and are numbered at 2" (51mm) intervals to easily identify proper shelf locations.
- **Easily Adjustable:** The unique shelf design and SiteSelect™ Posts enable "tool-free", quick adjustment at 1" (25mm) increments along the entire height of the post.
- **Improved Rigidity:** An enhanced Corner Release System has made Super Adjustable™ the most rigid, easily adjustable shelving system ever.
- **Strong:** Super Adjustable™ shelves hold as much weight as traditional Super Erecta wire shelving. Stationary units hold a maximum of 2,000 lb. (910kg). Maximum weight capacity per shelf (48" [1219mm] or shorter = 800 lb. [364kg]; longer than 48" [1219mm] = 600 lb. [273kg])
- **Choice of Finishes:** Super Adjustable™ Super Erecta shelving is available in a variety of finishes: chrome-plated for dry storage; Metroseal 3™ with antimicrobial product protection and Type 304 stainless steel for corrosive environments.
- **Accessories:** Compatible with the entire system of Super Erecta shelves and accessories. See Catalog Sheets 10.04, 10.05, 10.06 for more information.

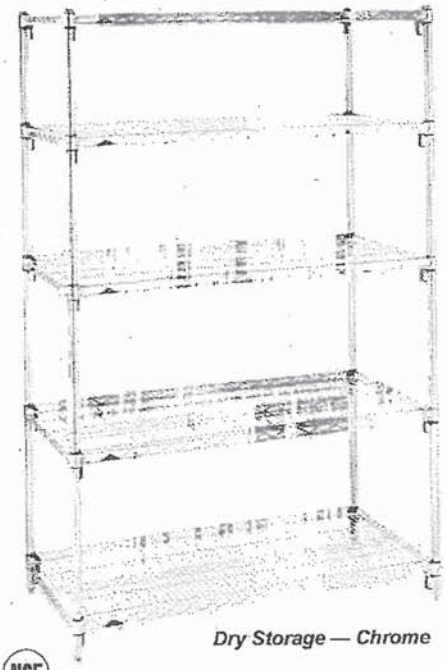

Dry Storage — Chrome

NSF

Corner Release System

Super Adjustable™ Advantage . . .

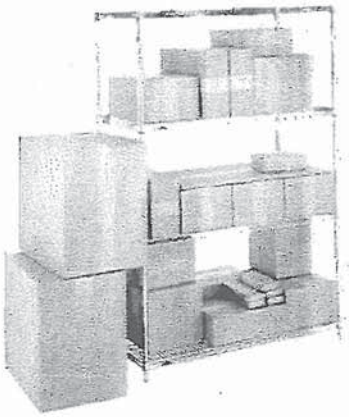

Easy "no tool" shelf adjustment

1" 25mm spacing minimizes dead space

Efficient use of space allows more storage levels to be added.

Storage efficiency can increase by 25% or more!

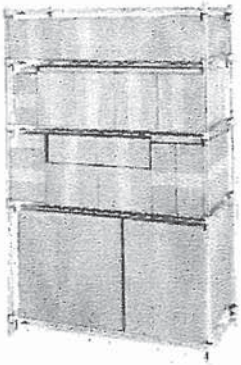

*MICROBAN® and the MICROBAN® symbol are registered trademarks of the Microban Products Company, Huntersville, NC.

InterMetro Industries Corporation
North Washington Street
Wilkes-Barre, PA 18705
www.metro.com

EMERSON.

SHELVING KITS

Shelving kits specifically designed for each Kold Locker™ walk-in configuration are offered as an optional extra. These kits are shipped with the Kold Locker™ walk-in and Capsule Pak™ refrigeration system so that all necessary components are at your location promptly when you need them. The shelving sets are coded to correspond to the Kold Locker™ walk-in configuration ordered and are offered in either three or four tier.

Two Types of Shelving Systems Are Available From Nor-Lake.

A. Green Kote™ Shelving: Electrostatically applied green baked epoxy over zinc steel and brite basic wire. Thickness: 2-3 mill. 15 year guarantee against corrosion.

B. Nor-Lake Standard Chrome Kote™ Shelving: Plated quality wire and steel. Surface nickel chrome plated.

Select the shelving FINISH of your choice. Shelving posts are engineered for maximum strength. Shelves are adjustable on 2" centers. All shelves are NSF listed and are zinc coated with a heavy layer of Protoxy for a maximum life span under humid storage conditions. Special clips are utilized to gain the maximum square footage of storage space for each Kold Locker™ model. 14", 18" and 24" wide shelves are used as required for maximum storage capacity in each set. This wire shelving is ideal for storage of all refrigerated or frozen products.

SHELVES:

Shelves to have #9 (.148") gauge crosswires spaced 3/4" on centers with crossbraces 1/4" (.192") minimum of 4-3/4" on center.

Shelf Frames

Channel to be 9/16" x 1" x .075" thick.

Shelf Collars

A round tapered 1-5/16" high steel collar to be welded at each corner.

POSTS

Posts to be .062" thick 1" O.D. round tubing notched every 2" on each corner of the post.

POST LEVELERS

Installed on the bottom of each post is nylon housing for a steel leveler 3/8"-16 x 1-3/4".

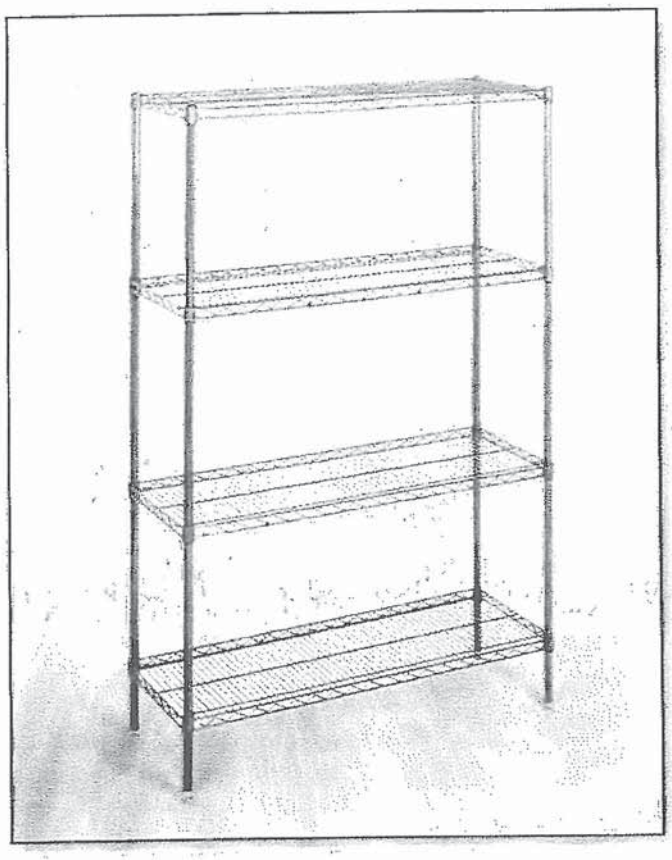

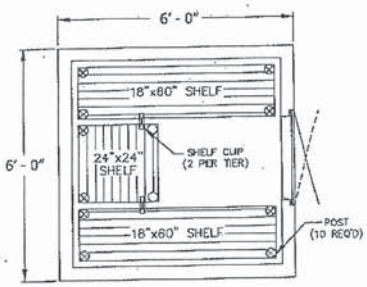

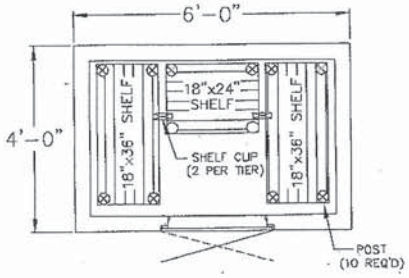

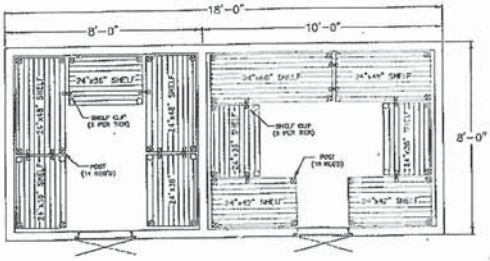

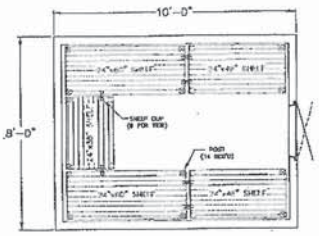

NOR-LAKE, INCORPORATED
727 Second Street
Hudson, Wisconsin 54016
800-955-5253
715-386-2323
800-961-5253 Parts
800-388-5253 Service
715-386-4290 FAX
www.norlake.com

ISO 9001:2008
Registered to ISO 9001:2008
File No. 10001816

Standex
Food Service Equipment Group

NORLAKE®

©2012 Nor-Lake, Inc.
Printed in the U.S.A.
Part Number: 079297
Revision Date: 07/12