Notice to Energy Service Companies (ESCOs)
Request for Qualifications
State of Washington Department of Enterprise Services
Division of Engineering & Architectural Services
Energy Program

Prepared for
Washington Department of Enterprise Services
February 22, 2013

Presented by
Ameresco, Inc.
222 Williams Avenue South
Renton, WA 98057

T: (206) 522.4270
F: (206) 687.3173

This Proposal contains data and information that has been submitted in response to a request for proposal or similar solicitation. The contents may include proprietary information and trade secrets that belong to Ameresco, Inc. Pages containing such information are marked "Confidential Information". Confidential information is disclosed to the recipient only for purposes of evaluation, and may not be disclosed to third parties without the express permission of Ameresco, Inc.

Table of Contents

Experience 1
Management Approach 10
Computation of Energy Baseline and Post Installation Energy Use 19
Savings and Equipment Performance Guarantee 22
Financing Ability 25
Appendix 1: Letters of Commitment 26
Appendix 2: Sample Performance Contracting Project – Centralia School District 28
Appendix 3: Resumes 29
Appendix 3: Form 330 49

Experience

1: The ESCO's experience in auditing and identifying energy efficiency projects.

Ameresco, Inc. (NYSE:AMRC) is a leading provider of energy efficiency and renewable energy solutions for facilities throughout North America. Headquartered in Framingham, Massachusetts, Ameresco has 63 offices in North America and has served more than 2,000 clients in market segments that include federal, state and local governmental, K-12 schools, higher education, utility, healthcare, and other institutional, commercial and industrial entities. Nationally, Ameresco has audited, developed, designed and managed the construction of more than $3.5 billion in energy savings performance contracting (ESPC) projects. Our Washington and Oregon projects represent nearly $200 million in retrofits in more than 80 million square feet of facilities. For each of these projects Ameresco:

- Directly performed the audits;
- Directly performed or managed the design;
- Directly performed the cost estimating;
- Directly performed the construction management;
- Directly performed or managed the commissioning; and
- Directly performed the measurement and verification

Our audits are unique in their reliance on direct monitoring and measurement of the energy use of individual systems, rigorous engineering approach, and responsiveness to customer needs. We have completed more than 60 ESPCs in Washington in the past two years. To meet the requirements of this RFQ we have limited the following list to the 30, eliminated some of the smaller projects and instances where we completed multiple projects for the same customer. The list, including the customer, contract value, year completed, client contact and client phone number, is provided on the following page.

List of ESPCs Complete in the Past 2 Years in Washington State (30 of more 60 completed projects):

Market Segment / Customer	Project Value	Comp. Date	Reference	Phone Number
Community Colleges				
South Puget Sound Community College Ph2 ESCO	$ 533,782	2012	Penny Koal	360-596-5227
Clover Park Technical College	1,842,894	2011	Amy Goings	253.589.5845
Bates Technical College - Phase 1	$ 1,550,225	2012	Marty Mattes	253-680-7156
School Districts				
Auburn School District - Phase 2	$ 2,916,956	2012	Jeffrey Grose	253.931.4826
Bethel School District - Phase 2	$ 1,141,013	2012	Michael Knaack	253-683-6042
Central Kitsap School District - Phase 3	$ 1,740,411	2012	George Kevins	360-662-8273
Centralia School District	$ 1,289,116	2011	Brian Ecko	360-880-4613
Cle Elum School District	$ 759,884	2011	Bill Davis	509-649-4850
Clover Park School District	$ 611,129	2012	Bruce Gardner	253-583-5481
Everett School District	$ 2,868,204	2011	Hal Beumel	425-385-4190
Hockinson School District - Phase 1	$ 731,404	2011	Joe Comstock	360-448-6410
Issaquah School District	$ 2,907,120	2012	Steve Crawford	425-837-7040
Longview School District	$ 1,499,653	2012	Larry Mayfield	360-575-7020
North Mason School District - Phase 1	$ 520,934	2011	Ed Lucas	360-277-2120
Olympia School District - Phase 3	$ 1,148,871	2012	Paul Clark	360.596.8567
Peninsula School District	$ 1,756,760	2011	Vicki Smith	253-530-1021
Port Angeles School District - Phase 2	$ 716,712	2011	Nolan Duce	360-457-0949
Puyallup School District	$ 1,809,109	2012	Gary Frentress	253 435-6621
Qunicy School District	$ 841,654	2012	Tom Harris	509-787-1355
Republic School District	$ 517,895	2012	Teena McDonald	509-375-3173
Selah School District - Phase 2	$ 656,257	2012	Don Szolomayer	509-698-0320
Shelton School District - Phase 2	$ 1,299,714	2011	Bob Woods	360-426-6322
South Kitsap School District - Phase 1	$ 1,288,710	2011	Tom O'Brien	360-874-6000
Tumwater School District	$ 878,189	2011	Mel Murray	360-709-7005
Washtucna School District	$ 1,889,509	2012	Donna Stoess	509-646-3211
Wenatchee School District Phase 1	$ 539,826	2012	Bryan Visscher	509-663-0555
Department of Social and Health Services				
Special Commitment Center Phase 2	$ 1,148,208	2011	Rich Christian	360-902-8157
Department of Corrections				
Shelton Corrections Center - Phase 2	$ 1,035,525	2011	Dwight Johnson	360-432-1508
Olympic View Corrections Center	$ 575,571	2012	Fred Brower	360-725-8343
Municipal Projects				
City of Olympia	$ 2,337,320	2012	Paul Hanna	360.709.2670

2: Provide a matrix of the range of energy and utility management services provided by the ESCO, including the ESCO's capability to provide the following services: energy auditing, financing, design, general contracting, construction management/administration, testing and balancing commissioning, warranty services, measurement and verification of savings, energy savings guarantees and facilitating utility participation to maximize utility rebates and incentives

As an independent energy services provider, our experienced team provides customers with solutions tailored to their unique requirements. Technology and equipment agnostic, Ameresco's seasoned experts are able to objectively select and provide the products, technologies, strategies and services best suited for each customer's unique needs. We provide comprehensive energy savings performance contracting specifically services that include:

- Energy auditing,
- Energy savings guarantees
- Project financing,
- Engineering and design,
- General contracting
- Construction management
- Contract administration,
- Utility rebate facilitation,
- Testing and balancing,
- Commissioning/retro-commissioning,
- Warranty services,
- Measurement and verification,

As the following chart indicates, Ameresco offers a comprehensive suite of professional services beyond energy performance contracting to optimize our client's entire energy supply and utilization chain. We assist customers in measuring, analyzing and tracking utility costs, optimizing energy efficiency, and maximizing opportunities for renewable and alternative energy sources. We also provide an array of web-based tools and services to facilitate ongoing effort to sustain and communicate the results of these efforts.

Energy Efficiency	Energy Supply	Integrated Services	Renewable Energy	Energy Information
Energy Savings Performance Contracting	Utility Budgeting	Asset Monetization	Landfill Gas	Utility Bill Analysis, Processing & Payment
Demand Side Management	Commodity Procurement	Plant Rehabilitation	Biogas	ENERGY STAR Reporting
Demand Response	Rate Analysis Negotiation	Facilities Management	Biomass	Green House Gas Reporting
Turnkey Design/Build	Price Risk Mitigation	On-site Cogeneration	Solar Photovoltaic	Automated Demand Response
Facility Renewal	Green House Gas Management	Distributed Generation	Solar Thermal	xChangePoint®
LEED Construction			Geothermal	AXIS®
Power Quality & Reliability			Wind	MyEnergyPro™
				Asset Planner™

3: The ESCO's experience with measurement and verification (M&V) processes.

The measurement and verification process (M&V) is critical to ensuring that an ESPC project performs as promised. For Ameresco, development of the M&V planning process begins in the audit phase, as energy baselines are developed from measured data and conservation measures are designed.

Subsequent to the installation of the measures selected by the customer, we monitor the key parameters of the end-use equipment (fans, pumps, boilers, lighting systems) affected by the project to verify savings. Our M&V process is based on the International Performance Measurement and Verification Protocol (IPMVP) Option A and is performed for as many years as the client wants. The collected data are analyzed to ensure the key parameters meet or exceed the values used in the calculations that were developed to determine post-installation energy use and savings. This is performed for each conservation measure involved in the project and is done at the system level. In this way, a true profile can be made of actual performance of each system. A diagram showing our M&V process – both pre- and post-construction – is found below.

Annually during the M&V contract period, we provide a detailed Measurement & Verification Report that clearly identifies the actual savings vs. guaranteed savings. Savings verification always reflects system operating conditions and is presented in clear understandable language.

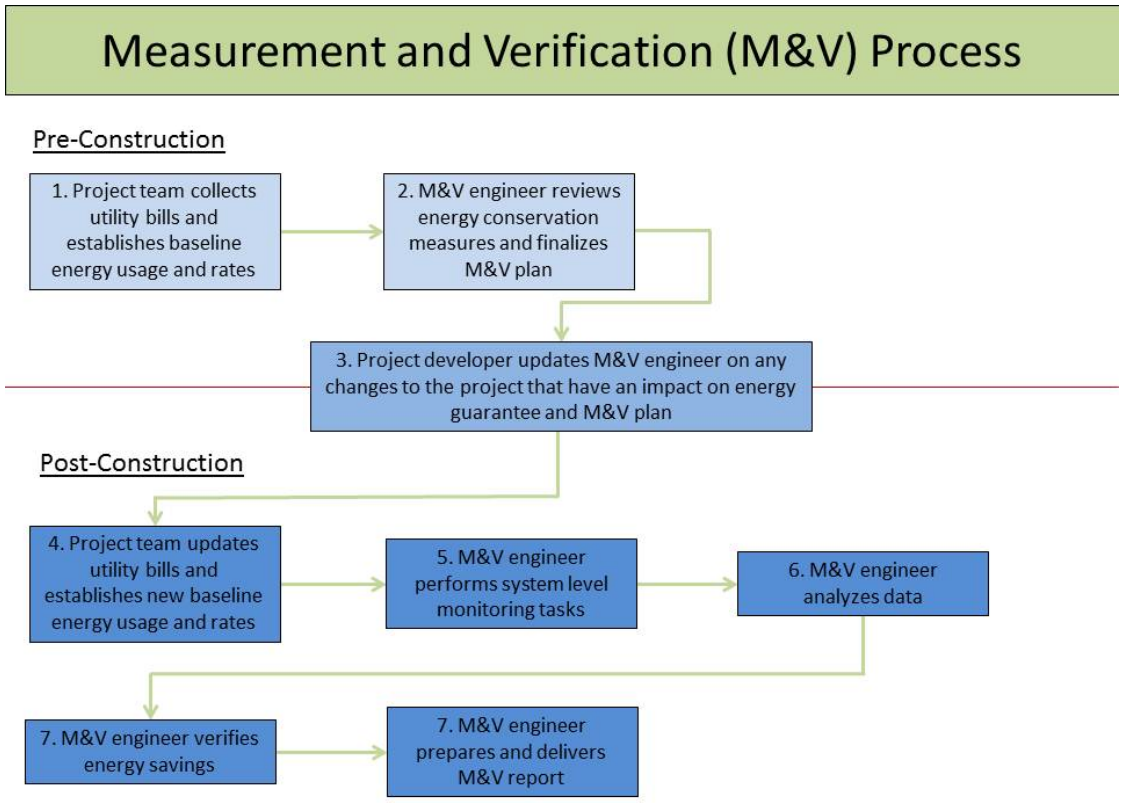

4: The ESCO's experience designing, costing and managing the construction of heating plants (including steam), chilled water plants, heating ventilation and air conditioning systems, heat recovery, energy management and control systems, lighting and lighting control systems, water efficiency, and other utility system improvements including renewables.

Ameresco personnel have extensive experience with all of the systems referenced in this topic, including central plant and heating system upgrades (including steam), chilled water system upgrades, heating, ventilation and air conditioning systems, heat recovery, energy management and control systems, lighting and lighting control systems, water efficiency, and other utility system improvements. In addition, we have specialized expertise in s co-generation and in renewable energy systems such as biomass, geothermal, solar thermal, solar PV and wind.

We also have experience with a wide variety of facilities and infrastructure, including K-12 schools, municipal buildings, higher education facilities, hospitals and other medical facilities, correctional facilities, libraries, natatoriums, wastewater and water treatment plants, street lights and other transportation infrastructure.

5: The ESCO's experience securing utility incentives for its customers. Discuss successful strategies implemented for maximizing utility incentives

Because they can offset a substantial portion of the cost of energy projects in Washington, utility rebates and incentives are an important financial component of energy projects here. Custom rebates are based on the total energy savings associated with a conservation measure or bundle of measures and success in maximizing these incentives for a customer is directly related to the ESCO's ability to identify and substantiate energy savings opportunities in the audit phase.

At Ameresco we work diligently on behalf of our customers to justify the highest possible utility incentives for energy, water/sewer, and other resource conservation measures. We have secured over $25 million in utility incentives for clients on past projects, and have worked with every electric and gas utility in Washington State. With every ESPC we manage the entire rebate process, from pre-installation approval to final verification.

Our success in maximizing utility incentives begins with our approach to energy audits. Because our audits are based on actual monitoring and measurement of building systems, we're able to identify and document more energy savings, which in turn drives higher utility incentives. We had an opportunity to test this in 2011 when we commissioned a study of the K-12 energy projects awarded Washington State energy grants in 2009 and 2010 (of which 58 were developed and implemented by us). The following chart shows the average utility incentive as a percentage of project costs for the top five ESCOs (based on the number of projects completed). Only one ESCO had a higher percentage, and this was over a sample of just 4 projects, versus 58 for Ameresco. This study is available upon request.

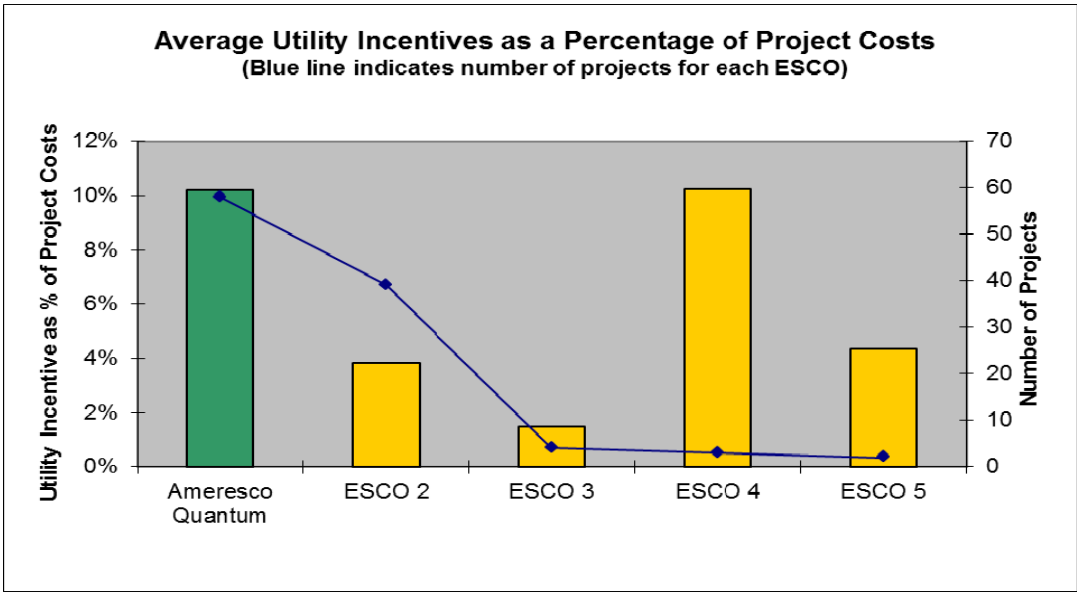

6: A description of the experience key staff have, who are responsible for administration of any potential work awarded thru this project.

The following Ameresco staff members will be assigned to projects performed under the DES contract.

Michael J. O'Connor, P.E.

Regional VP, Project Director and Responsible Licensed Professional Engineer

Mr. O'Connor is the co-founder of Engineering and Development and the Vice President, Northwest Region for Ameresco. A leader in the ESCO industry in WA he has been involved in auditing, engineering, and constructing energy and water savings performance contracts e for over seventeen years. Mr. O'Connor's projects for state agencies, school districts, local government, higher education and other customer segments across Washington encompass tens of millions of square feet of building space. Prior to his career in energy and water conservation, Mr. O'Connor was a test engineer on nuclear aircraft carriers at Newport News Shipbuilding in Virginia, and an automated system test engineer at Babcock & Wilcox in Lynchburg, VA where he tested software and hardware used in the manufacturing of nuclear reactor cores.

Grant Thorsland

Project Manager

Mr. Thorsland has performed project management on a wide range of energy projects; including municipalities, schools, office buildings and hospital facilities. He is adept at baseline monitoring and field testing, engineering calculations, and cost estimating of proposed measures. Mr. Thorsland has worked extensively in all phases of testing, adjusting & balancing of constant and variable volume air and hydronic distribution systems and has vast experience in field engineering and the trouble shooting of deficient air and hydronic conveying systems. Prior to joining Ameresco Mr. Thorsland was a test & balance technician with NIAC in Kent, WA and Penn Air Control in Las Vegas, NV.

Lonn A. Inman

Project Manager

Mr. Inman has over 10 years of experience managing and performing commercial and industrial electrical contracting and energy management controls system installations. He served as a NEBB certified TAB supervisor and has worked extensively in all phases of testing, adjusting & balancing of constant and variable volume air and hydronic distribution systems in accordance with NEBB & AABC procedural standards. He is adept at analyzing pneumatic/electric/DDC controls systems and components; sound and vibration testing; indoor air quality remediation; performance testing and evaluation of fans, pumps, boilers, chillers, cooling towers, economizers, heat recovery systems and electrical systems. Mr. Inman has experience troubleshooting deficient air and hydronic conveying systems. He has planned, managed and executed building commissioning and performance contracting projects. He is adept at baseline monitoring and field testing; evaluating facility O&M procedures; analyzing trend and field data; engineering calculations, and cost estimating of proposed measures.

Doug Rogers

Project Manager

Mr. Rogers has more than twenty years of experience developing energy savings performance contracts in K-12 school, municipal, higher education and other market segments and is familiar with design, construction, and operation of mechanical systems for commercial, industrial, educational, government, and other facilities. Mr. Rogers' previous experience has included programming, troubleshooting and field engineering Energy Management Systems, as well as sales and account management roles with a leading building control vendor.

Paul Ristow, P.E.

Project Manager

Mr. Ristow has worked extensively as a project mechanical engineer for both public and private institutions. He has experience with all HVAC systems including steam distribution systems, chiller plants systems & fire protection systems. He has knowledge in software & programs for Design & Energy Modeling using AutoCAD & Visual DOE and sustainability with USGBC-LEED and BREEAM. Mr. Ristow is LEED accredited and has developed LEED Certification Measurement & Verification Plans for several projects around the nation. He also has experience in mechanical utility analysis and calculations.

Ron Haxton, P.E.

Project Manager

Mr. Haxton has over 18 years of experience developing and managing Energy Savings Performance Contracts across a broad array of customer segments, including K-12, state and local government and higher education. Ron has managed energy audits and cost estimates for over $25 Million in ESPC projects, and is a Professional Engineer and past Certified Construction Manager.

Jason Prall

Project Engineer

Mr. Prall has many years of experience analyzing existing HVAC, plumbing, and refrigeration designs to identify energy saving opportunities, performing building model simulation using eQUEST, Trace, and HAP, energy lifecycle cost analysis, and CAD modeling using BIM software. He has extensive experience with clients in K-12 schools, local government and higher education across the U.S. in in Washington State.

Jeremy Keller

Project Engineer

Prior to joining Ameresco, Mr. Keller was a Mechanical Engineer and Project Developer at Northwest Mechanical, Inc. where he specialized in the design and installation of hydronic, ground source heat pump, and solar thermal systems. In addition, Mr. Keller's career to date has included work for a major Northwest air conditioning equipment distributor, and the design, installation and servicing of commercial security, fire, video, and access systems.

Deborah Larson

Project Engineer

Ms. Larson is a key source in engineering and auditing performance contracting projects. She is adept baseline monitoring and field testing, engineering calculations, developing proposed measures. Ms. Larsen has a multitude of experience in energy conservation projects. She has worked as project manager, developing specifications for inclusion in contract documents, evaluating systems and controls for possible savings as well as a design engineer and commissioning agent, working closely with clients and contractors to evaluate installation and functionality of building equipment and systems. Ms. Larsen has experience in field engineering and troubleshooting with several proprietary energy management systems.

Daniel Fishbone

Project Engineer

Mr. Fishbone is a key source in engineering and auditing performance contracting projects. He is adept at baseline monitoring and field testing and engineering calculations. Prior to joining Ameresco Mr. Fishbone spent two years with Arup, a worldwide design and engineering firm where he assisted in the construction administration of the Art Institute of Chicago, Modern Wing in Chicago, was an assistant Mechanical Engineer for the Doha Convention Center and Tower in Doha, Qatar, was responsible for mechanical load testing and energy use for LEED qualification for the Delta Airlines Terminal 3 and Terminal 4 Concourse Extensions at JFK International Airport in New York, among other projects.

Michael Pacella

Measurement & Verification Specialist

Mr. Pacella has assisted in auditing facilities and calculating energy savings associated with energy conservation measures. He is proficient at collecting, processing, and analyzing utility data and has experience performing baseline adjustments. He has also developed a measurement and verification (M&V) process and written many M&V reports detailing over 56,000 MMBtu of savings.

Randy McPherson

Construction Manager

Mr. McPherson has over 20 years of experience in all facets of the construction industry. He has successfully completed many fast track million dollar projects and is proficient in developing partnerships with owners, architects, engineers, local building officials, suppliers and contractors with an emphasis on costs and completion schedule. Mr. McPherson is versed in project estimating, design, building codes, safety regulations, contracts, site management (including direction of work force), procurement of materials and on-site installations.

Pete Babington

Construction Manager

Mr. Babington has over 24 years of experience in construction and capital project management and is well versed in all aspects of these activities, including bidding, sub-contractor management, supervision of on-site installations, contract administration, change orders, safety, quality control, occupant moves, close-out, and commissioning. He has completed numerous multi-million dollar projects at community colleges in Washington and is proficient at developing partnerships with customers, architects, engineers, local building officials, suppliers and contractors with an emphasis on cost containment and on-time completion.

Kyle Jones

Construction Manager

Mr. Jones has more than 5 years of construction management experience, with expertise that includes: developing construction budgets for capital improvement projects, management of project scope and end-user program requirements, generation of construction documents and specifications for public bids, management of new construction and renovation projects, development of CPM schedules to track construction progress, acting as owner representative responsible for responding to requests for information, verification of back-up information for contractor change orders, construction field inspections and daily reports, development of detailed punch lists and correction manifests, review of as-builts for accuracy, and management of close-out process.

Jason Hite

Commissioning Technician

Mr. Hite has 12 yeas of experience in the energy- engineering and services field. He has performed commissioning of HVAC, lighting control, and other systems. He has performed startup, commissioning, balancing and measurement of power consumption of major HVAC system components including fans, VFDs, pumps, chillers, cooling towers, boilers, terminal boxes, and electric heating coils. Mr. Hite has an in depth knowledge of control systems and has performed calibration of airflow, pressure, and temperature sensors for EMS systems, and testing of HVAC components to determine equipment capacity..

Marcus Eidal

Commissioning Technician

Mr. Eidal has extensive experience with monitoring tools and equipment, including the placement and data retrieval. He has experience in preparing deficiency reports, punch lists, and tab agendas and the test and balance of air and hydronic systems to obtain optimum operating performance.

7: A description of the ESCO's familiarity with EPA's Energy Star Portfolio Manager and other benchmarking tools.

Ameresco personnel are intimately familiar with Energy Star Portfolio Manager, having created building profiles and entered utility data for close to one hundred K-12 schools in the past few years as part of the services we provide helping customers apply for Washington State energy and operational savings grants. In addition, Ameresco's Axis utility bill management service and MyEnergyPro energy information dashboard automatically populate energy consumption data in Portfolio Manager.

8: A discussion of problems experienced on projects and the remedy for those problems.

Problems do occur on projects due to errors on the part of Ameresco staff or sub-contractors as well as circumstances that were not identified in the audit or otherwise could not have been anticipated (such as the unanticipated presence of asbestos). We view such problems as opportunities to demonstrate our commitment to customer service. It is our policy to apprise the customer and DES of a problem as soon as it is identified, and then to address it in a timely manner and in a fashion that minimizes impact to the customer and schedule. If the problem is the result of an error by Ameresco staff or one of our subcontractors, we rectify it without cost to the customer. If the problem results from a customer issue (e.g. asbestos in an asbestos free building), we work with the customer to solve the problem using contingency funds.

9: What is the makeup of a typical project team with regards to local (WA, ID, OR) vs. outside the region staffing.

The typical Ameresco team for an ESPC in WA consists of:

- Account Executive
- Project Director
- Project Manager
- Project Engineer
- Construction Manager
- Commissioning Technician
- Finance Manager

The only member of this team that would not come from a local Ameresco office (Renton, Spokane or Portland) is the Finance Manager, Tim Farkas, who is located in Las Vegas, NV. When we need specialized expertise in a renewable technology such as biomass or wind, the required personnel are sourced from a variety of Ameresco's offices.

Management Approach

10: The ESCO's organizational structure and management approach to the project. Clearly describe roles and responsibilities of typical ESCO staff who will be assigned to any project obtained under this selection and of any sub-consultants included on the ESCO's team. For sub-consultants, describe the ESCO's prior experience working with the sub-consultant.

The three strengths of our organizational structure and management approach that customers appreciate most are our personal approach, technical competence, and ability to deliver projects that perform as promised. Key to our success is our organizational structure, which facilitates collaboration between our staff, the customer and other project stakeholders, and sub-consultants and sub-contractors. The team members include:

Project Director: The Project Director is a resource for other team members, assists in evaluating resource conservation measures, provides peer review of energy calculations, provides oversight of all project deliverables, and coordinates Ameresco staff resources.

Project Manager: Our Project Managers have successfully managed more than 100 ESCO projects in Washington and Oregon. They are the primary contact for the project from start to finish and take personal responsibility for every detail of the project; from audits to construction meetings. They are the on-site presence that ensures the success of each project and are responsible for identifying customer needs, ECM development and costing, financial modeling, coordination with utilities, and contract execution.

Project Engineer: Reporting to the Project Manager, the Project Engineer performs system monitoring and measurement and engineering calculations during the audit; assists in the design effort; and answers design questions in the construction phase. Typically, all lighting and control system design is performed in-house. Other designs are brought to 30-50% design level in-house during the audit phase; at this point they are either completed in-house by a sub-consultant.

Construction Manager: The Construction Manager is involved in the audit phase as a cost estimator and in verifying constructability. In the design phase, they review drawings for construction issues. In the construction phase, the Construction Manager manages all contractor issues; from pre-selection of bidders, through bidding, weekly construction meetings, to project closeout and warranty.

Commissioning Technician: The Commissioning Technician either directly performs the commissioning or designs the commissioning plan and oversees its implementation by a third party. They assist with monitoring during the audit and perform reviews in the design phase. In the construction phase they perform "interim commissioning" to ensure that installed systems operate properly when they are enabled. They also create the monitoring & verification plan and perform initial monitoring & verification upon completion of construction.

Finance Manager: The Finance Manager assists the customer in identifying and evaluating financing options for the project. They are knowledgeable about a wide range of financing options and provides and can help the customer determine which option best meets their needs.

The following chart illustrates the reporting relationships, roles and responsibilities of our team members. Sub-contractors and sub-consultants, when required, are selected based on individual project requirements and customer preferences.

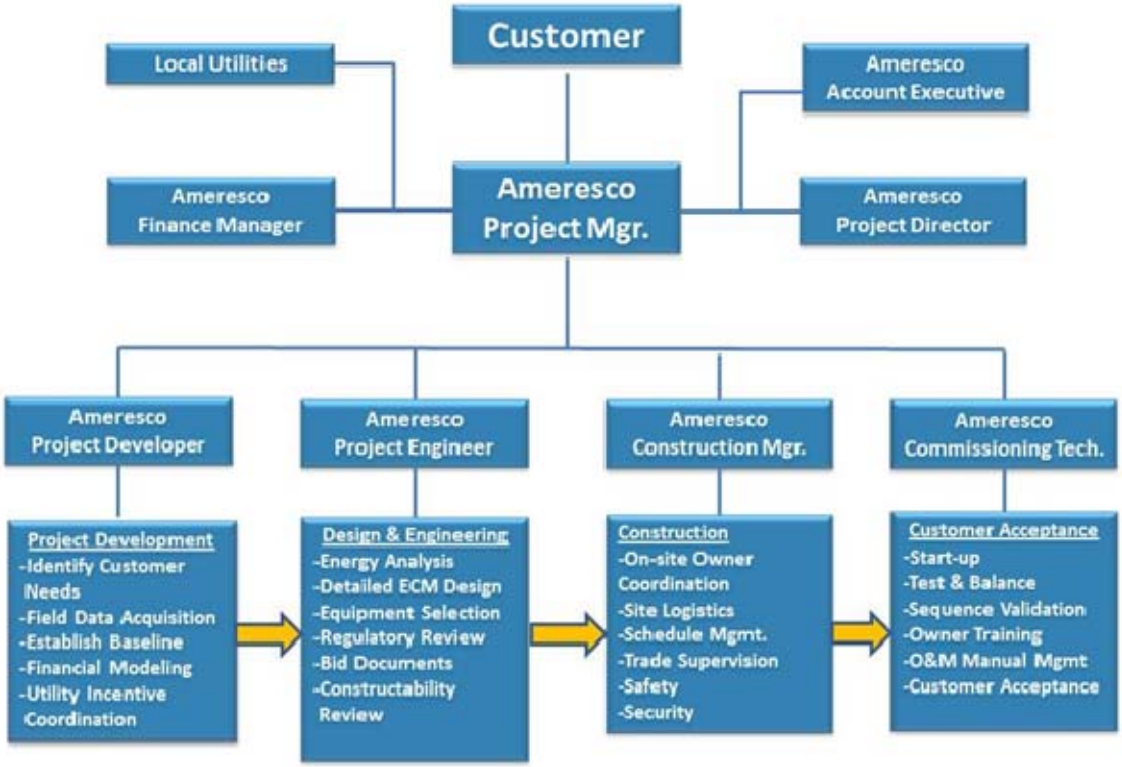

11: The ESCO's policies and procedures for managing and delivering its committed work products in a timely fashion within contractual obligations, including project development, construction, and post implementation verification.

With over 60 projects completed in the past two years, we have experienced rapid growth in the volume of our ESPC work in Washington projects and have kept pace with that growth by expanding our workforce and strengthening our internal project management and manpower tracking tools. Our Washington-based staff has grown from 12 in 2009 to 28 in 2013and we opened an office in Spokane in 2012 to better serve our customers in Eastern Washington.

The role of the Project Manager is at the core of our procedures for managing and delivering projects in a timely fashion. The Project Manager is responsible for the project from the Preliminary Audit to closeout, acting as the primary customer contact and supervising the work of the other Ameresco team members. Having a single responsible point of contact at the center of every project provides smooth transitions from one project phase to another and ensures that the customer always knows who to call if they have a question or in the event that a problem arises.

Director of Operations Grant Thorsland is responsible for overseeing the Project Management staff and he conducts regular project review meetings to ensure that projects are properly resourced and progressing in a timely manner. These efforts are aided by our robust construction management software tools. If needed, Ameresco has over 700 employees dedicated to ESPC work around the country that we can turn to for assistance, as well as specialist teams with expertise in renewable energy and other technology areas.

12: The ESCO's approach to marketing the DES Energy Program to potential client agencies in conjunction with DES personnel.

Our support for the DES Energy Program is reflected in the fact that over 95% of the ESPCs we've completed have been administered through this program. For public agencies that may use the DES Energy Program but aren't required to, we provide information regarding the available options of using the DES program or issuing an RFP to select an ESCO, emphasizing the important benefits the DES program provides, including rapid selection of an ESCO from a pre-qualified list, DES project oversight, and use of the DES contract and associated terms. Once a prospective customer has indicated an interest in working with DES we introduce them to the appropriate DES personnel at the earliest opportunity. We find that most clients determine that their needs are best served by utilizing the DES Energy Program.

We do not utilize ESCO selection methods based on Washington's Cooperative Purchasing rules as we believe these rules were never intended to be used for this purpose, and that such selections are of questionable legality and therefore put customers at risk.

13: What is the minimum size project your firm would consider viable.

In general, we believe that $500,000 is reasonable minimum project size for an ESPC, however historically we have implemented projects smaller than that in three circumstances:

- A first phase project for customers that have the potential for follow-on phases,
- Second, third or later phase projects for existing customers,
- Occasional projects for small school districts or other entities with pressing needs that cannot otherwise be addressed.

We intend to continue with our policy on exceptions to our minimum project size.

14: The ESCO's approach to effectively communicate project information with the DES Energy Program prior to sharing with client agency.

To facilitate communication with DES Energy Program personnel, our policy is to send audit fee proposals, energy services proposals and other information to the DES engineer before presenting it to the customer. We do this to keep DES personnel informed, as well as to gain the benefit of their review and suggestions for improvement prior to submission to the customer. Rarely do we send one of these documents to the DES engineer and not receive helpful feedback of some kind.

15: The ESCO's approach to project development from marketing to delivering the ESP.

The Ameresco approach to developing an ESPC is as follows:

- **Initial Customer Meeting:** At this meeting we discuss the customer's needs, objectives and annual energy costs; the ESPC process and benefits; sources of capital or loans to fund a project, and the two methods for selecting an ESCO (DES vs. RFP).
- **ESCO Selection:** Once the customer has determined their ESCO selection path we introduce them to DES personnel or assist with the development of their RFP.
- **Preliminary Energy Study:** Following selection as the customer's ESCO we perform a no-cost preliminary energy study. This is a scoping exercise in which our engineers conduct a facility walk through, talk with facility personnel about problem areas, and obtain energy consumption data. We develop a preliminary list of energy and water conservation measures ranked by payback period that could be investigated in an Investment Grade Audit (IGA). This information is first reviewed with the DES energy program representative, then with the customer. With assistance from DES, the customer selects the measures to be investigated in the IGA and establishes the cost-effectiveness criteria for the project (such as the maximum payback period for the project, for example).

- **Investment Grade Audit:** We provide a fee proposal for the IGA to the customer that is based on investigating the measures they selected from the Preliminary Energy Study and any others the customer may have identified. We then conduct the audit utilizing our Total System Evaluation approach, which relies on detailed monitoring and measurement of energy consuming equipment to establish an accurate energy use baseline and identify energy savings opportunities. Preliminary design is completed for each measure and cost-estimating is done using our in-house capabilities and sub-contractor quotes. The results of the audit and recommendations are reviewed with the DES energy program representative.
- **IGA Presentation:** We meet with the customer and the DES energy program representative to review the results of the IGA. For each measure investigated in the audit we provide a the current energy use of the existing equipment or system, the post-retrofit energy use of the proposed equipment or system, and the resulting savings –in both energy units and dollars based on current energy costs. In addition, we provide the cost to implement the measure, an estimate of the associated utility rebate or incentive, the net cost and the payback period. The information is presented in an interactive spreadsheet in which individual measures can be easily selected or deselected from the project. The labor and materials costs and energy savings associated with the selected measures are summarized on a separate tab, along with ESCO fees, DES fees, contingency, sales tax and other costs. Cash flow analysis is presented on a third tab. So far as we are aware, we are the only ESCO that provides customers with this type of interactive spreadsheet tool.
- **Energy Services Proposal:** The energy services proposal (ESP) includes a description of the facilities, the current energy consuming systems, charts of information derived from our monitoring and measures, descriptions of the energy conservation measures selected by the customer from the IGA, energy savings calculations, project financials and cash flows, energy and performance guarantees, warranty, and other information. We review the ESP with the DES energy program representative, and when it is finalized to the customer for their approval.

16: The method for contracting the installation of the measures, maintaining cost competitive pricing, and whether the ESCO uses open book pricing.

One of the largest independent ESCOs in North America, Ameresco does not self-perform the installation of conservation measures. Instead we're able to help customers objectively select the products and technologies best suited to their needs, and then ensure the most competitive pricing possible by bidding labor and materials to pre-selected vendors that meet the customer's procurement requirements. We then review bid responses with the customer to make the final selection.

Our Investment Grade Audits provide clear, detailed analysis of the existing systems and propose the most appropriate conservation measures with the guaranteed maximum price, guaranteed energy savings, and estimated utility incentive provided for each measure. All labor and material costs and ESCO fees are open book to the customer. While we provide a guaranteed maximum price, our goal is to bring our projects to completion under that cost, with 100% of sub-contract savings benefiting the customer. The proposed measures are summarized in a one page financial overview that includes all costs, including ESCO fees, contingency, bonding and sales tax.

17: The ESCO's procedures for timely closeout of construction projects delivery of O&M manuals, commissioning reports and other pertinent paperwork to the DES Energy Program and the client agency.

Timely closeout of projects is important to all concerned; the customer, DES and Ameresco. The closeout process begins when the Construction Manager notifies the Contract Administrator that contracted work (or a significant portion) is complete. At that point O&M Manuals are generated and other paperwork assembled. Other steps in the closeout process include:

- Commissioning: Commissioning must be completed and all identified deficiencies remedied,
- Training: The customer must commit to a training schedule and complete training, and
- Closeout meeting: A closeout meeting includes the customer, DES, and Ameresco must be scheduled and held.

While we are not always successful in achieving a timely closeout, due primarily to delays in scheduling training or other factors driven by the customer, we work diligently to meet that goal.

18: The ESCO's procedures for timely submittal of required documentation to Departments of Revenue, Employment Security, and Labor and Industries.

The customer is responsibility for submitting the Notice of Completion of Public Works Contract to the Departments of Revenue, Employment Security, and Labor and Industries. As the ESCO, we complete the form with all necessary information. The owner then fills in their UBI number, signs and submits the form. We provide the complete form to the customers both in print form and on a CD with all closeout packages at all closeout meetings.

19: The ESCO's approach to mitigate risks associated with guaranteed cost, savings, and performance.

The heart of performance contracting is risk management. How risks are identified, assessed, managed and mitigated is critical to the success of an ESPC. The major risk factors (for the ESCO) and our approach to managing and mitigating them are as follows:

- Energy audit quality: We believe that we conduct the most rigorous energy audits in the industry: As indicated elsewhere in this response, our audits are based on monitored and measured data.
- Equipment selection and installation procedures: After nearly fifteen years delivering successful ESPCs in Washington we've gained the experience necessary to know what equipment to propose and which sub-contractors should install it. Our vendor-neutral approach to ESPCs means we don't have to specify equipment made by a parent company; rather we're able to work with customers to select the best equipment for their specific needs.
- Commissioning: While we do not self-perform the installation of equipment, we do self-perform commissioning as this function is critical to our ability to ensure that the equipment and systems we install are operating correctly and will generate the energy savings we've guaranteed.
- Operations and maintenance practices: We have to ensure that our customer is able to operate and maintain the equipment and systems we install after the project is complete, and we do this by providing extensive training of the customer's facility staff, and by remotely monitoring systems and performing trend analysis to ensure they are operating properly.

We have encountered very few instances in which equipment did not perform as intended and/or failed to generate the guaranteed energy savings. In those rare circumstances we have replaced the equipment or made other changes to remedy the situation at our expense, and compensated the customer for any lost energy savings.

20: The ESCO's approach to sharing EPACT tax credits with client agencies.

Quantum Engineering was one of the first ESCOs in Washington (if not the nation) to share EPACT tax credits with customers and we have continued this policy since becoming part of Ameresco. We only utilize the EPACT tax credit for interior lighting, due to the difficulty of earning and substantiating the tax credit for other measures. Annually, we calculate the value of the tax credit based on our tax rate, deduct 10% of the value to cover our administrative expenses, and distribute 50% of the net credit value to customers.

21: The ESCO's experience and approach to meeting the public works requirements for apprenticeship training programs as directed by Chapter 39.04.320 RCW.

We are familiar with the apprenticeship training requirements in RCW 39.04.320 and the relevant exceptions. We are currently implementing 27 school district projects with construction values in excess of $1 million that are subject to these requirements (15% of labor hours must be performed by apprentices). We have trained our Construction Managers and developed special bid documents and contracts to ensure that our sub-contractors meet these requirements or seek and document exceptions when appropriate.

22: How Minority and Women Owned Business (MWBE) enterprises will be utilized on the project.

At Ameresco we always strive to recruit Minority & Women Owned Businesses and include them in our "short list" of contractors. This effort has resulted in good working relationships with several qualified MWBE firms, including those listed below. We have met all MWBE requirements on past projects.

MWBE Subconsultants	Certification
Berona Engineering	**MBE/DBE certified small business**

MWBE Subcontractors	Certification
Ramsey Plumbing & Heating	**WBE certified business**
Med-Tox Northwest	**WBE certified business**
Jormac Electric (Electrical)	**MBE certified business**
Bee Enterprises (General contractor)	**MWBE/DBE certified business**
SMK Construction (Sheetmetal)	**MWBE/DBE certified business**

23: The ESCO's policies and procedures for recycling materials such as lamps, ballasts, fixtures, ceiling tiles, and other recyclable material.

Ameresco maintains stringent policies and procedures for recycling of lamps, ballasts, and major construction material and we encourage recycling or re-use of materials that have a component that can be of future use. Materials we recycle or re-use include:

Lamps and Ballasts: We require recycling of all fluorescent lamps and ballasts, as well as proper disposal of any hazardous materials associated with these items. In this recycling process, the re-useable materials (metals, glass, mercury) are scavenged and re-used to make new products, and the PCB materials are properly disposed of.

Steel and Other Metals: All metals removed from the job site are sent to a metal recycler.

Other Recyclable Materials: Any recyclable material that signifies a substantial amount of waste, including:

Asphalt shingles	Concrete	Plastic film
Bricks or other masonry	Ethylene glycol	Polystyrene
Cardboard, paper, packaging	Gypsum wallboard	Rigid foam insulation
Carpet & pad	HDPE	Window glass
Ceiling tiles	Oils and other lubricants	Wood

If any of the above materials constitute a significant quantity of waste on a project, Ameresco will require recycling or re-use. The term "significant" typically means anything over 50 lbs. of waste, and may depend upon the material being considered.

24: How potential hazardous materials encountered in the installation of energy efficiency measures will be managed; and whether the ESCO has been cited by the Washington Department of Ecology, Federal Environmental Protection Agency, or any other regulatory agency for inappropriate handling, transportation or disposal of hazardous materials. If cited what was the ESCOs remedy. Being cited does not automatically constitute disqualification as an ESCO.

The most important step in properly handling hazardous materials is identifying them in the audit phase, which allows for proper pricing of abatement or removal. Sub-contractors such as Med-Tox Northwest or IRS Environmental may be used to plan the disposal of hazardous material. In the construction phase, Ameresco will contract with qualified abatement firm(s) to properly remove the material. Abated material will be disposed of, incinerated, or recycled per the clients' requests and applicable laws. Other common materials of concern include lead paint, solvents, petroleum products or various chemicals. As with other hazardous material, we are prepared to properly manage these items. Planning, awareness, and teamwork with the customer and sub-contractors has enabled us to successfully manage hazardous materials. Ameresco has never cited by the Washington Department of Ecology, Federal Environmental Protection Agency, or other agency for inappropriate handling, release, transportation or disposal of hazardous materials.

Computation of Energy Baseline and Post Installation Energy Use

25: Describe the methodology used to calculate baseline energy use and savings of different types of EEMs. This should include a description of various software tools that are utilized in the calculation process. Include the methodology used for campus settings that are master metered.

Baseline Computation: Ameresco makes extensive use of monitoring instruments, historical data, and site visits to establish the baseline energy use of each system that may be impacted by conservation measures (see chart on the following page). We perform extensive on-site analyses of the systems in addition to evaluating utility bills and past operating logs. Combined, this information is used to develop a load profile and energy use profile for relevant systems. For example, the following data are typically used:

- Lighting systems are analyzed for actual operating hours using lighting loggers. A detailed audit of each lamp/ballast/fixture combination is done.
- Fan systems are analyzed using operating histories obtained from data loggers; logging the current draw on a minute-by-minute basis. Actual airflow is measured using flow hoods or pitot tube scans across the ductwork. Economizer and heating/cooling valve control may be analyzed from field tests, or temperature logging.
- Boiler systems are analyzed by using historical boiler logs, makeup meter readings, and on-site combustion efficiency readings. Measuring actual fuel flow, water or steam flow, and inlet and outlet temperature (or pressure, for steam) is used to test part load efficiency.

These are just a few of the systems that we analyze using measurements of actual operating conditions. The result is a clear understanding of baseline operating conditions that correlate with utility bills. By metering individual systems, and matching our calculations to the metered system data, we can accurately establish a baseline without the use of individual building meters.

Once actual system configuration and operational data are collected, we make use of standard engineering calculations or computer models to calculate energy consumption of the systems. Computer models used include Power DOE, ELITE, and TRACE. We do not rely on extensive use of computer models because of their ability to obscure the true operating conditions in the analysis. Wherever possible, we use straight-forward engineering calculations to determine energy use:

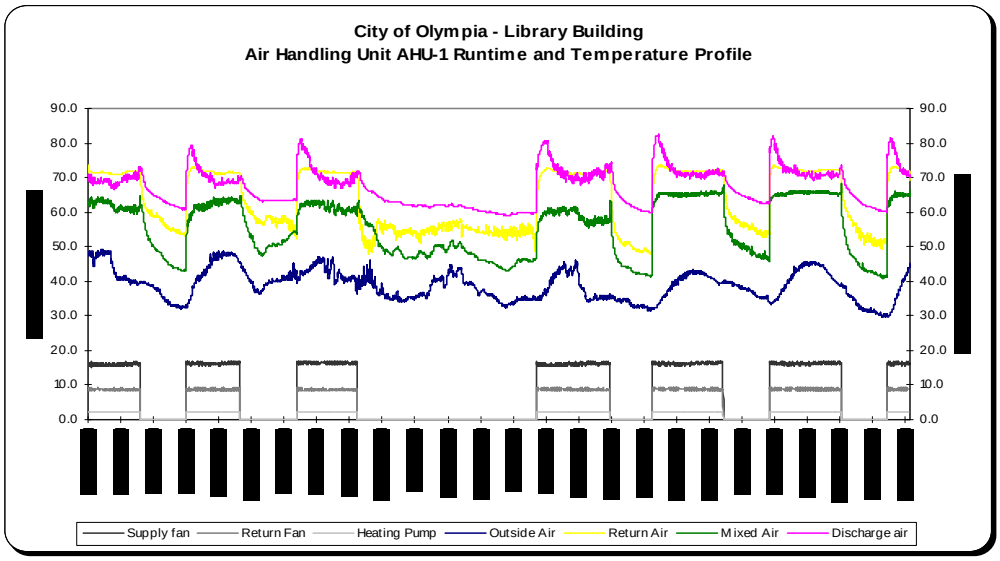

Example of using comprehensive system monitoring to establish a true energy baseline

In summary, we establish the baseline through the use of actual measurements and field conditions, and the application of standard engineering calculation or computer models. We work closely with facility personnel and assure that our baseline is accurate and understandable. Calculations and measurements follow the guidelines of the Option B of the International Performance Measurement & Verification Protocol (IPMVP).

Savings Computation in the Audit Phase: After reviewing the baseline energy use for each system, we will meet with the customer to refine the list of proposed measures, eliminating or adding measures as needed. At this point, it typically becomes apparent which measures will meet the Customer's financial criteria. We then analyze the resulting list of measures using standard engineering principles, BIN analysis, spreadsheet calculations, and computer simulations (Power DOE and TRACE) where applicable to calculate energy savings. We typically use the same calculation for the proposed measure as that used for the baseline. For instance, when replacing a boiler, we would use the baseline load profile and apply it to the new boiler efficiencies to determine the proposed energy use. Wherever applicable, actual load data is used. In addition, we prepare detailed cost estimates for each measure.

Savings Computation for Post-Installation: Subsequent to installation of the measures, Ameresco will perform detailed metering of the end-use equipment (fans, pumps, boilers, lighting systems) to verify savings. This actual metered data (and metered performance parameters) is then inserted into the same calculation used in the energy study to determine post-installation energy use and savings. This is performed for each conservation measure involved in the project. This metering is done at the system level: metering an individual fan motor, luminaire, or boiler, for instance. In this way, the true profile can be made of actual performance of each system.

26: Describe potential scenarios where a modified baseline may be proposed.

The most common scenario in which we propose a modified baseline is when the HVAC equipment serving a building or spaces within a building does not meet the minimum outside air or other code requirements. Each piece of equipment and component of the system does not need to be up to code, but the space as a whole must meet minimum code requirements for ventilation, temperature, etc. A modified baseline could be appropriate when the above situation is caused by failed/broken equipment, a poor design, or lack of equipment all together.

27: Describe the ESCO's utilization of M&V processes in the establishment of baseline energy use and the post installation energy use.

At Ameresco, we do two analyses to establish baseline and post-project energy use: system level and whole facility. System level baseline energy use is established by logging key parameters such as runtime, temperatures, etc., and by taking instantaneous measures of factors that don't vary, such a true power, flow, etc. For the post-project system level energy use, we return during the M&V period and trend, log, and/or measure the same key parameters as we did in the audit. We compare those results to our energy calculation predicted. For example: Pre-retrofit boiler efficiency was 85%; we calculated that post-retrofit efficiency would be 90%, and tested during M&V shows it to be 92%. If what we measure during M&V meets the thresholds established in the ESP, then the equipment and systems are providing the post-project energy savings.

For the whole facility use we analyze utility bills pre- and post-project, making weather adjustments based on heating degree days. This analysis provides a useful comparisons unless there have been major facility changes between the audit and M&V..

Savings and Equipment Performance Guarantee

28: The ESCO's project cost guarantee policies and procedures; including remedies when project costs exceed ESCO estimates.

Ameresco guarantees the maximum project cost for every ESPC. We use open book pricing throughout the project to ensure the customer knows the actual project costs. In the event that costs related to the original project scope exceed the guaranteed maximum, the excess cost will be borne by us. If the actual construction cost falls below the guaranteed value, the customer may keep the difference or use it to implement additional measures.

Ameresco has extensive experience in project cost estimating, and we make use of our construction subcontractors to verify estimates. Because we are not affiliated with any product or service, we can provide our customers with complete transparency and true open book pricing.

29: The ESCO's energy savings guarantee policies and procedures, including remedies when actual savings are lower than the ESCO's estimates and guarantees, and the length of the savings guarantees.

We guarantee resource savings. This means that our guarantees are stated in kWh, kW, Therms, gallons, and cubic feet of water. In this way, as the utility rates increase, the customer receives the benefit of more savings without the guarantee being diminished. Because of the rigor of our audit approach, the resource savings for projects developed and engineered by our personnel have always exceeded the guarantees.

The length of the guarantee equals the period of time the customer continuously engages Ameresco to provide measurement and verification services (M&V). The first year of M&V is included in the project cost. In subsequent years the M&V fee is based on the time required to perform the service. We work with each customer to provide the level of M&V and time period appropriate for their project and the measures implemented.

Our guarantees are very simple:

- A set of parameters are measured to verify system performance.
- These parameters are used to determine the energy use of the system.
- Actual energy use is compared to the baseline energy use to determine actual savings.
- If the actual energy savings do not meet the guaranteed savings we pay the difference.

While we have never missed a guarantee, we recognize the possibility of a savings shortfall. Such a shortfall will typically be identified during the M&V process, or the customer may notice non-performance of

equipment or higher than expected utility bills. In either case, we will begin working to remedy the situation within one week of learning of it. Working with the customer to avoid or minimize disruptions to their operations, we will perform necessary modifications to the system to realize the savings at our cost; and will pay for lost savings until the problem is remedied.

30: The ESCO's equipment performance guarantee policies and procedures, including remedies when performance of equipment is not met.

Each resource conservation measure has a set of performance criteria tied to it. Typical criteria include:

- Lighting level for lighting measures
- Boiler efficiency for boiler measures
- Acceptable heating and cooling space temperature ranges for HVAC or control measures
- Warm-up time for night setback measures
- Instantaneous water savings for water conservation measures related to plumbing fixtures
- Acceptable hot water temperatures for domestic hot water related measures.

We will set acceptable performance criteria in the contract and will pay for measures that fail if we are unable to rectify performance within a set time period.

31: Provide information on the ESCO's warranty enforcement role and the ESCO's responsibility, if any, when there is an equipment failure beyond the warranty period when the client agency has financed the project and assumed ownership of the installed equipment.

We work hard to negotiate the longest affordable guarantees for our customers on equipment. Typical warranty periods are 5 years on lighting ballasts, 3 to 5 years on lamps, and 3 years on variable speed drives. Most boilers and mechanical systems have a standard warranty of 1 year, as does sub-contract labor.

Regardless of the length of the equipment warranty, Ameresco warrants all materials and workmanship for a period of at least one year from date of substantial completion. During this period, we are a "one stop shop" for all warranty issues. We ask that the customer contact us in the event of a warranty issue, and we will respond immediately to make sure that systems are brought back into operation quickly and effectively.

If the customer experiences equipment failure after the warranty period, we will assist them in obtaining effective service expeditiously. We have extensive industry contacts and relationships and we use these to ensure our customers receive proper service. Should a major equipment failure occur early in the life of a piece of ESCO installed equipment, we will work with vendors and suppliers to get the equipment replaced or repaired without cost to the customer. We value our relationship with our clients, and we do what it takes to support them and to keep the project successful in their eyes.

Throughout the life of the energy services project, Ameresco is committed to ensuring that every project exceeds the customer's expectations with regard to energy savings, price, and performance. We do this through teamwork with the customer and other project stakeholders, and by maintaining a high level of service, competence and professionalism throughout the entire project. In short, we guarantee a successful project!

Financing Ability

32: The ESCO's project financing ability. Describe capability for carrying costs until completion of the installation of energy efficiency measures. Describe capability and willingness to fully finance project over a financing term including how the interest rate the ESCO would use is determined. Provide letters of commitment from funding sources or from ESCO's Chief Financial Officer if self-funded. Tax-exempt municipal lease financing does not qualify for ESCO financing ability..

With 2012 revenues of approximately $630 million, Ameresco is one of the largest independent energy services company in the country. As of September 30, 2012, Ameresco had total assets of approximately $682 million, unrestricted cash in excess of $26 million, a $100 million credit facility, and a fully-contracted construction backlog of approximately $1.5 billion (these figure were current as of the February 15, 2013 Full Year 2012 Outlook).

Financing Assistance: Ameresco's finance professionals have many years of experience helping customers identify the most cost effective financing mechanism. They have sourced more than $1 billion in project financing for customers from sources that include John Hancock, Bank of America, Capital One, Chase Bank and other financial institutions. Our finance professionals are well connected in the lender market and are able to provide an independent and transparent bidding process to determine the right financing partner. We work with lenders every day to provide competitive interest rates and we have a thorough understanding of performance contracts, where the financing is supported by Ameresco's savings guarantee. Letters of commitment from Bank of America and Green Campus Partners are found Appendix 1..

Construction Period Financing: At Ameresco we do not charge for construction period financing. We do not invoice the customer for an energy conservation measure until it is installed and providing energy savings. This policy can represent very significant savings for our customers.

Direct Financing: Ameresco has provided direct financing for ESPC projects and is capable of doing do for future projects. In these situations, interest rates are based on the current market, the type of credit, term, and internal rate of return requirements. In our experience, the need for direct financing for public agencies in today's market is rare.

Appendix 1: Letters of Commitment

Neal E. Skiver
Senior Vice President
Green Campus Partners, LLC
215 Lincoln Avenue
Santa Fe, NM 87501
(732) 917-2311 office
(505) 690-3335 mobile
neal.skiver@greencampuspartners.com

February 15, 2013

State of Washington
Department of Enterprise Services
Engineering & Architectural Services
Energy Program
1500 Jefferson
P.O. Box 41012
Olympia, WA 98504-1012

Re: State of Washington Request for Qualifications, Project No. 2013-133

To Whom It May Concern:

On behalf of Green Campus Partners, LLC ("*GCP*"), please accept this letter as confirmation that GCP is interested in providing financial services to the State of Washington and Ameresco for energy efficiency projects.

GCP has developed one of the most complete offerings of tax exempt and taxable municipal financing products in the energy services industry. The majority of our transactions are tax-exempt municipal leases; however we are familiar with other non-traditional funding mechanisms.

Please contact us with any questions or comments. We look forward to being of service to the State of Washington and Ameresco.

Sincerely,

Green Campus Partners, LLC

Neal E. Skiver

Neal E. Skiver
Senior Vice President

Chris Youngs
Senior Vice President
Energy Services

Banc of America Public Capital Corp
370 17th Street, Ste. 3590
CO1-004-35-00
Email: chris.youngs@baml.com
Tel: (303) 617-1290
Fax: (206) 585-9712

February 20, 2013

Tim Farkas
Finance Manager – Western Region
Ameresco, Inc.

Re: State of Washington, Department of Enterprise Services, Request for Qualification Energy Program Project No. 2013-133

Dear Mr. Farkas:

On behalf of Banc of America Public Capital Corp ("BAPCC"), please accept this letter as confirmation that BAPCC is interested in providing financial services to the State of Washington and Ameresco, Inc. for energy efficiency projects.

BAPCC is a leading provider of equipment finance solutions to the state, local and federal government markets with one of the most complete offerings of tax-exempt and taxable municipal financing products available. A large portion of our transactions are structured as tax-exempt municipal lease purchase or installment purchase agreements; however, we are familiar with other non-traditional funding mechanisms as well. Our market expertise includes QECBs, QZABs, QSCBs and NewCREB transactions for energy efficiency projects.

As purely an indication of the current private placement market, 15 year tax-exempt rates for similar credits is currently ranging between 2.85-3.00%. Pricing and structure shall be subject to the capital markets at the time of finance proposal and based upon then current Swap rates, the final financed amount and weighted average life of the financing, and the credit of the ultimate issuer. Please note that this letter is not a commitment, offer or proposal to lend, and does not create any obligation of Bank of America or BAPCC.

In 2007, Bank of America announced our $20 billion, 10-year lending and investment commitment for environmental saving initiatives. Having finished this commitment four years ahead of schedule, Bank of America has now started a new $50 billion, 10-year environmental business and operational commitment for environmental initiatives to address climate change, demands on natural resources, and advance lower-carbon economic solutions.

We look forward to being of service to the State of Washington and Ameresco, Inc. Pease do not hesitate to contact us with any questions or comments.

Sincerely yours,

Chris Youngs
Senior Vice President

Appendix 2: Sample Performance Contracting Project – Centralia School District

In this appendix you will find the following information for our sample project:

- Preliminary Audit findings
- Audit proposal
- Measurement and Verification plan including key variables to be measured (this is included in the Energy Services Proposal)
- Investment Grade Audit findings
- Energy Services Proposal with detailed cost breakdown
- Measurement and Verification Report

Quantum Engineering and Development
14900 Interurban Ave. So.
Tukwila, WA 98168

Table 1

Project: **Energy Services - Centralia School District**
Date: **10/1/2009**
Subject: **List of Potential Energy Conservation Measures (ECM's)**

ECM	Description	Payback Rank
Centralia High School (CHS)		
Mechanical Conservation Measures		
CHS-M1a	Replace Electric Resistance Air Handling Units (Gas Fired) - This measure will replace the existing electric heated multi-zone air handling units with new gas fired multi-zone air handling units.	2
CHS-M1b	Replace Electric Resistance Air Handling Units (HW Boiler) - This measure will replace the existing electric heated multi-zone air handling units with new hot water heated multi-zone air handling units. New boilers will be installed to provide hot water to the air handling units.	3
CHS-M2	Upgrade existing DDC energy management system (EMS): - For areas of sporadic occupancy areas, implement "demand" ventilation using CO2 sensors and "occupied stand-by" control using occupancy sensors.	1
CHS-M3	Retro-commissioning of the existing controls system. - Verify that the existing control sequences are operating as intended; including but not limited to runtime schedules, economizer operation, morning warm-up and night setback sequences.	1
Plumbing Conservation Measures		
CHS-W1	Water Retrofit - This measure will install water conservation devices (aerators on sinks, flush valves on urinals and toilets, or new fixtures) to save water and energy for water heating.	1
Stadium		
Lighting Conservation Measures		
STADIUM-L1	Retrofit/Replace Stadium and Grand Stand Lighting - This measure will retrofit or replace the existing HID stadium and grand stand lighting with new HID and fluorescent technology fixtures.	3
Centralia Middle School (CMS)		
Mechanical Conservation Measures		
CMS-M1	Replace Boilers - This measure will replace the existing Raypack boilers with new high efficiency condensing boilers	3
CMS-M2	Pump Consolidation and VFD's - This measure will remove the existing zone pumps and install a single pump with zone control valves and VFD.	1
CMS-M3	Upgrade existing DDC energy management system (EMS): - For areas of sporadic occupancy areas, implement "demand" ventilation using CO2 sensors and "occupied stand-by" control using occupancy sensors.	1
CMS-M4	Retro-commissioning of the existing controls system. - Verify that the existing control sequences are operating as intended; including but not limited to runtime schedules, economizer operation, morning warm-up and night setback sequences.	1
Plumbing Conservation Measures		
CMS-W1	Water Retrofit - This measure will install water conservation devices (aerators on sinks, flush valves on urinals and toilets, or new fixtures) to save water and energy for water heating.	1
Edison Elementary School (EES)		
Mechanical Conservation Measures		
EES-M1	Replace Boilers - This measure will replace the existing Cleaver Brooks steam boiler and associated steam-to-hot water converter with new hot water, high efficiency condensing boilers.	3
EES-M2	Upgrade existing DDC energy management system (EMS): - For areas of sporadic occupancy areas, implement "demand" ventilation using CO2 sensors and "occupied stand-by" control using occupancy sensors.	1
EES-M3	Retro-commissioning of the existing controls system. - Verify that the existing control sequences are operating as intended; including but not limited to runtime schedules, economizer operation, morning warm-up and night setback sequences.	1

Quantum Engineering and Development
14900 Interurban Ave. So.
Tukwila, WA 98168

Table 1

Project: **Energy Services - Centralia School District**
Date: **10/1/2009**
Subject: **List of Potential Energy Conservation Measures (ECM's)**

ECM	Description	Payback Rank
Plumbing Conservation Measures		
EES-W1	Water Retrofit - This measure will install water conservation devices (aerators on sinks, flush valves on urinals and toilets, or new fixtures) to save water and energy for water heating.	1

NOTES:
1) Measures that are likely to pay for themselves through energy savings and utility incentives.
2) Measures that may pay for themselves, or may require some capital infusion
3) Measures that will require significant (>50%) capital infusion

Quantum
Engineering and
Development, Inc.

14900 Interurban Avenue S., Suite 208 Tukwila, WA 98168

October 1, 2009

Mrs. Lisa Steel
Department of General Administration
206 General Administration Building
P.O. Box 41012
Olympia, WA 98504

SUBJECT: Energy Audit Fee Proposal
Centralia School District – Energy Services Project
OSPI Energy Grant Applicants

Dear Lisa:

We are pleased to submit this proposal for the audit phase of Energy Services for the Centralia School District. Quantum will provide engineering services for the subject project in accordance with the following:

Audit Services

A. Audit Phase Services will include:

Quantum will undertake an Investment Grade Energy Audit of the Facilities. The Energy Audit will identify cost effective Energy Conservation Measures (ECM's). The Energy Audit will include the following:

1. The Cost Effective ECM's to be installed or caused to be installed by the ESCO;
2. The Maximum Allowable Project Cost or Guaranteed Construction Cost, itemized in detail;
3. The Baseline Energy Consumption for the Facility, including the data, methodology and variables used to compute the Baseline, and the Baseline calendar period which will not be less than twelve (12) months;
4. Guaranteed annual Energy Savings, estimated annual Energy Cost Savings and estimated Utility Incentive Funding that are expected to result from the installation of the ESCO Equipment and from the ESCO Service;
5. A financial analysis of the proposed project;
6. A summary audit report.

Conservation measures will include items that save energy, water or other resources as shown in the attached Table 1.

B. Energy Services Proposal will include:

1. A brief description of the Facility and a description of those buildings and systems which will receive ESCO Equipment and ESCO Services;
2. Detailed description of services that the ESCO will perform on or in the Facility, including but not limited to engineering, construction management, the operations and maintenance

procedures for use on ESCO Equipment, training for Facility personnel, providing warranty service, and equipment maintenance;

3. Detailed documentation of fieldwork for the audit, calculation input and output in support of the recommendations made in the Energy Services Proposal, economic and engineering assumptions, sketches, floor plans and any other information developed in the course of the Audit.
4. Recommendations for replacement of Existing Equipment, along with recommendations for improvements to Existing Equipment and Operating Conditions;
5. The standards of comfort and service appropriate for the Facility;
6. The method by which Energy Savings and Energy Cost Savings will be calculated during the term of the Energy Services Agreement;
7. A description of how the ESCO will finance its acquisition of the ESCO Equipment and when title to the ESCO Equipment will pass to the Owner;
8. A description of how the Energy Cost Savings will be guaranteed by the ESCO;
9. A description of how the ESCO proposes to be compensated;
10. The term of the Energy Services Agreement;
11. The Termination Value for each year during the term of the Energy Services Agreement;
12. The schedule for project completion.
13. A detailed audit report and energy services proposal.

Fee for Engineering Services:

Basis and amount:

Fixed Fee for Services

Item A - Energy Audit - OSPI:	$5,680
Item B - Energy Services Proposal:	$20,543

At this time, we are requesting an agreement only for Item A – Energy Audit Services. Should the client wish to proceed after the OSPI Grant Award announcement is made, we will then request an amendment to include fees for Item B – Energy Service Proposal. It is understood by Quantum that payment and terms are contingent upon the requirements set forth in the Energy Services Proposal.

Schedule for Engineering Services:

The Energy Audit will be completed one week prior to the due date for the OSPI Grant Submittal. Subsequently, if the school district chooses to pursue an energy services proposal, a schedule for that work would be developed.

We at Quantum Engineering & Development appreciate the opportunity to provide these services. If this proposal for Audit Services is satisfactory, please forward contract documents.

Sincerely,

Michael J. O'Connor
President

Attachments: Fee Proposal and Conservation Measure Lists dated 10/1/09

Project: **Energy Services - Centralia School District**
Date: **10/1/2009**

Subject: **Audit Fee - OSPI**

	Project Manager	Project Engineer	Field Audit Technician	Admin. Assistant	Total Hours
TASK					
Baseline Condition Measurement &					
Field Work - Baseline Measurement	4	4	12	2	22
Baseline Calculations	4	8			12
Analysis of Potential ECM's	4	8			12
Report Writeup	2	4			6
Present Findings	4	4			8
Total Hours:	18	28	12	2	60
Hourly Rate:	$105	$95	$85	$55	
Estimated Fee for Services:	**$1,890**	**$2,660**	**$1,020**	**$110**	**$5,680**

Total Audit Fee - Energy Project: ***$ 5,680***

Project: **Energy Services - Centralia School District**
Date: **10/1/2009**
Subject: **List of Potential Energy Conservation Measures (ECM's)**

ECM	Description	Payback Rank
Centralia High School (CHS)		
Mechanical Conservation Measures		
CHS-M1a	Replace Electric Resistance Air Handling Units (Gas Fired) - This measure will replace the existing electric heated multi-zone air handling units with new gas fired multi-zone air handling units.	2
CHS-M1b	Replace Electric Resistance Air Handling Units (HW Boiler) - This measure will replace the existing electric heated multi-zone air handling units with new hot water heated multi-zone air handling units. New boilers will be installed to provide hot water to the air handling units.	3
CHS-M2	Upgrade existing DDC energy management system (EMS): - For areas of sporadic occupancy areas, implement "demand" ventilation using CO2 sensors and "occupied stand-by" control using occupancy sensors.	1
CHS-M3	Retro-commissioning of the existing controls system. - Verify that the existing control sequences are operating as intended; including but not limited to runtime schedules, economizer operation, morning warm-up and night setback sequences.	1
Plumbing Conservation Measures		
CHS-W1	Water Retrofit - This measure will install water conservation devices (aerators on sinks, flush valves on urinals and toilets, or new fixtures) to save water and energy for water heating.	1
Stadium		
Lighting Conservation Measures		
STADIUM-L1	Retrofit/Replace Stadium and Grand Stand Lighting - This measure will retrofit or replace the existing HID stadium and grand stand lighting with new HID and fluorescent technology fixtures.	3

NOTES:
1) Measures that are likely to pay for themselves through energy savings and utility incentives.
2) Measures that may pay for themselves, or may require some capital infusion
3) Measures that will require significant (>50%) capital infusion

Project: **Energy Services - Centralia School District**
Date: **10/1/2009**
Subject: **List of Potential Energy Conservation Measures (ECM's)**

ECM	Description	Payback Rank
Centralia Middle School (CMS)		
Mechanical Conservation Measures		
CMS-M1	Replace Boilers - This measure will replace the existing Raypack boilers with new high efficiency condensing boilers	3
CMS-M2	Pump Consolidation and VFD's - This measure will remove the existing zone pumps and install a single pump with zone control valves and VFD.	1
CMS-M3	Upgrade existing DDC energy management system (EMS): - For areas of sporadic occupancy areas, implement "demand" ventilation using CO2 sensors and "occupied stand-by" control using occupancy sensors.	1
CMS-M4	Retro-commissioning of the existing controls system. - Verify that the existing control sequences are operating as intended; including but not limited to runtime schedules, economizer operation, morning warm-up and night setback sequences.	1
Plumbing Conservation Measures		
CMS-W1	Water Retrofit - This measure will install water conservation devices (aerators on sinks, flush valves on urinals and toilets, or new fixtures) to save water and energy for water heating.	1

NOTES:
1) Measures that are likely to pay for themselves through energy savings and utility incentives.
2) Measures that may pay for themselves, or may require some capital infusion
3) Measures that will require significant (>50%) capital infusion

Project: **Energy Services - Centralia School District**
Date: **10/1/2009**
Subject: **List of Potential Energy Conservation Measures (ECM's)**

ECM	Description	Payback Rank
Edison Elementary School (EES)		
Mechanical Conservation Measures		
EES-M1	Replace Boilers - This measure will replace the existing Cleaver Brooks steam boiler and associated steam-to-hot water converter with new hot water, high efficiency condensing boilers.	3
EES-M2	Upgrade existing DDC energy management system (EMS): - For areas of sporadic occupancy areas, implement "demand" ventilation using CO2 sensors and "occupied stand-by" control using occupancy sensors.	1
EES-M3	Retro-commissioning of the existing controls system. - Verify that the existing control sequences are operating as intended; including but not limited to runtime schedules, economizer operation, morning warm-up and night setback sequences.	1
Plumbing Conservation Measures		
EES-W1	Water Retrofit - This measure will install water conservation devices (aerators on sinks, flush valves on urinals and toilets, or new fixtures) to save water and energy for water heating.	1

NOTES:
1) Measures that are likely to pay for themselves through energy savings and utility incentives.
2) Measures that may pay for themselves, or may require some capital infusion
3) Measures that will require significant (>50%) capital infusion

Project: **Energy Services - Centralia School District**
Date: **10/1/2009**
Subject: **List of Potential Energy Conservation Measures (ECM's)**

ECM	Description	Payback Rank
Jefferson Lincoln Elementary School (JLES)		
Mechanical Conservation Measures		
JLES-M1	Replace Boilers - This measure will replace the existing Cleaver Brooks boiler with new high efficiency condensing boilers.	3
JLES-M2	Upgrade existing DDC energy management system (EMS): - For areas of sporadic occupancy areas, implement "demand" ventilation using CO2 sensors and "occupied stand-by" control using occupancy sensors.	1
JLES-M3	Retro-commissioning of the existing controls system. - Verify that the existing control sequences are operating as intended; including but not limited to runtime schedules, economizer operation, morning warm-up and night setback sequences.	1
Plumbing Conservation Measures		
JLES-W1	Water Retrofit - This measure will install water conservation devices (aerators on sinks, flush valves on urinals and toilets, or new fixtures) to save water and energy for water heating.	1

NOTES:
1) Measures that are likely to pay for themselves through energy savings and utility incentives.
2) Measures that may pay for themselves, or may require some capital infusion
3) Measures that will require significant (>50%) capital infusion

Table 1-2
Selected List of Measures

Project: Centralia School District
Measure: Selected List of Measures
Date: November 25, 2009

"Yes" or "No"	ECM #	Conservation Measure	Baseline Energy & Water Use and Costs: Current Annual Use - Electrical: Consume kWh	Current Annual Use - Electrical: Demand kW	Current Gas Use (Therms)	Current Water Use (CCF)	Current Electric Cost $	Current Gas Cost $	Current Water Cost $	Current Total Cost $	Proposed Energy & Water Use and Costs: Future Total Annual Use - Electric: Consume kWh	Future Total Annual Use - Electric: Demand kW	Future Gas Use (Therms)	Future Water Use (CCF)	Future Electric Cost $	Future Gas Cost $	Future Water Cost $	Future Total Cost $	Proposed Savings: Annual Savings Electric: Consume kWh	Annual Savings Electric: Demand kW	Annual Gas Savings (Therms)	Annual Water Savings (CCF)	Annual Resource Savings $	Annual Maint. Savings $	Initial Labor/Mat'l Cost $	Estimated Utility Incentive $	Final Labor/Mat'l Cost $	Simple Payback Years
	Centralia High School (CHS)																											
		Mechanical Conservation Measures																										
No	ECM-CHS-M1a	- MEASURE NOT SELECTED																										
No	ECM-CHS-M1b	- MEASURE NOT SELECTED																										
No	ECM-CHS-M2	- MEASURE NOT SELECTED																										
Yes	ECM-CHS-M3	Retro-commissioning of the existing controls system - This measure will verify that the existing control sequences are operating as intended; including but not limited to runtime schedules, economizer operation, morning warm-up and night setback sequences.	1,254,500	2,007	-	-	$ 71,970	$ -	$ -	$ 71,970	1,216,865	2,007	-	-	$ 70,062	$ -	$ -	$ 70,062	37,635	-	-	-	$ 1,908	$ -	$ 21,012	$ -	$ 21,012	11.01
		Lighting Conservation Measures																										
Yes	ECM-CHS-L1	Lighting Retrofit/Replacement (High School) - This measure will retrofit or replace any remaining T-12, magnetic ballast or incendescant fixtures with T-8, electronic ballast and compact flourescent technology.	340,810	939	-	-	$ 21,193	$ -	$ -	$ 21,193	181,003	485	-	-	$ 11,201	$ -	$ -	$ 11,201	159,807	453	-	-	$ 9,993	$ -	$ 77,612	$ -	$ 77,612	7.77
No	ECM-CHS-L2	- MEASURE NOT SELECTED																										
		Water Conservation Measures																										
Yes	ECM-CHS-W1	Water Retrofit/Replacement - This measure will investigate water and sewer savings opportunities by installing low consumption fixture or devices.	17,554	-	-	647	$ 890	$ -	$ 11,280	$ 12,170	3,989	-	-	279	$ 202	$ -	$ 4,865	$ 5,068	13,564	-	-	368	$ 7,102	$ -	$ 16,316	$ -	$ 16,316	2.30
	Centralia Middle School (CMS)																											
		Mechanical Conservation Measures																										
Yes	ECM-CMS-M1	Replace Boilers - This measure will replace the existing Raypack boilers with new high efficiency condensing boilers	-	-	22,865	-	$ -	$ 20,796	$ -	$ 20,796	-	-	20,833	-	$ -	$ 18,948	$ -	$ 18,948	-	-	2,032	-	$ 1,849	$ -	$ 127,067	$ -	$ 127,067	68.74
No	ECM-CMS-M2	- MEASURE NOT SELECTED																										
Yes	ECM-CMS-M3	Upgrade existing DDC energy management system (EMS) - This measure will implement "Demand Ventialtion Control" using CO2 sensors and "occupied stand-by" control using occupancy sensors for areas of sporatic occupancy. This measure will also two failing control zone supervisors.	70,405	95	11,553	-	$ 3,965	$ 10,507	$ -	$ 14,472	30,292	95	5,874	-	$ 1,932	$ 5,342	$ -	$ 7,274	40,113	-	5,679	-	$ 7,198	$ -	$ 68,701	$ -	$ 68,701	9.54
No	ECM-CMS-M4	- MEASURE NOT SELECTED																										
		Water Conservation Measures																										
Yes	ECM-CMS-W1	Water Retrofit/Replacement - This measure will investigate water and sewer savings opportunities by installing low consumption fixture or devices.	-	-	614	654	$ -	$ 558	$ 11,392	$ 11,950	-	-	139	244	$ -	$ 127	$ 4,258	$ 4,385	-	-	474	409	$ 7,565	$ -	$ 27,925	$ -	$ 27,925	3.69
	Edison Elementary School (EES)																											
		Mechanical Conservation Measures																										
Yes	ECM-EES-M1	Replace Boilers - This measure will replace the Cleaver Brooks steam boiler with new high efficiency condensing hot water boilers	-	-	15,497	-	$ -	$ 14,095	$ -	$ 14,095	-	-	14,120	-	$ -	$ 12,842	$ -	$ 12,842	-	-	1,378	-	$ 1,253	$ -	$ 86,052	$ -	$ 86,052	68.68
No	ECM-EES-M2	- MEASURE NOT SELECTED																										
Yes	ECM-EES-M3	Retro-commissioning of the existing controls system - This measure will verify that the existing control sequences are operating as intended; including but not limited to runtime schedules, economizer operation, morning warm-up and night setback sequences.	163,387	1,124	14,120	-	$ 12,971	$ 12,842	$ -	$ 25,813	158,485	1,124	13,696	-	$ 12,723	$ 12,457	$ -	$ 25,179	4,902	-	424	-	$ 634	$ -	$ 7,004	$ -	$ 7,004	11.05
		Lighting Conservation Measures																										
Yes	ECM-EES-L1	Lighting Retrofit/Replacement - This measure will retrofit or replace any remaining T-12, magnetic ballast or incendescant fixtures with T-8, electronic ballast and compact flourescent technology.	179,453	587	-	-	$ 11,547	$ -	$ -	$ 11,547	74,898	246	315	-	$ 4,824	$ 287	$ -	$ 5,110	104,555	341	(315)	-	$ 6,436	$ -	$ 45,061	$ -	$ 45,061	7.00
		Water Conservation Measures																										
Yes	ECM-EES-W1	Water Retrofit/Replacement - This measure will investigate water and sewer savings opportunities by installing low consumption fixture or devices.	-	-	107	285	$ -	$ 97	$ 3,313	$ 3,410	-	-	24	112	$ -	$ 22	$ 1,296	$ 1,318	-	-	83	174	$ 2,092	$ -	$ 18,148	$ -	$ 18,148	8.68
	Jefferson Lincoln Elementary School (JLES)																											
		Mechanical Conservation Measures																										
Yes	ECM-JLES-M1	Replace Boilers - This measure will replace the Cleaver Brooks hot water boiler with new high efficiency condensing hot water boilers	-	-	5,039	-	$ -	$ 5,916	$ -	$ 5,916	-	-	4,591	-	$ -	$ 5,390	$ -	$ 5,390	-	-	448	-	$ 526	$ -	$ 67,753	$ -	$ 67,753	128.85
Yes	ECM-JLES-M2	Upgrade existing Pneumatic Control System - This measure will upgrade the existing Pnuematic Control system to Full DDC and implement "Demand Ventialtion Control" using CO2 sensors and "occupied stand-by" control using occupancy sensors for the Multi-purpose Room.	323,283	1,976	5,661	-	$ 24,629	$ 6,646	$ -	$ 31,275	313,635	1,976	4,939	-	$ 24,140	$ 5,799	$ -	$ 29,938	9,647	-	722	-	$ 1,336	$ -	$ 77,250	$ -	$ 77,250	57.81
No	ECM-JLES-M3	- MEASURE NOT SELECTED																										
		Lighting Conservation Measures																										
Yes	ECM-JLES-L1	Lighting Retrofit/Replacement - This measure will retrofit or replace any remaining T-12, magnetic ballast or incendescant fixtures with T-8, electronic ballast and compact flourescent technology.	172,884	540	-	-	$ 11,016	$ -	$ -	$ 11,016	68,017	233	309	-	$ 4,421	$ 362	$ -	$ 4,783	104,866	307	(309)	-	$ 6,233	$ -	$ 39,613	$ -	$ 39,613	6.36

Table 1-2
Selected List of Measures

Project: Centralia School District
Measure: Selected List of Measures
Date: November 25, 2009

"Yes" or "No"	ECM #	Conservation Measure	Baseline Energy & Water Use and Costs: Current Annual Use - Electrical: Consume kWh	Current Annual Use - Electrical: Demand kW	Current Gas Use (Therms)	Current Water Use (CCF)	Current Electric Cost $	Current Gas Cost $	Current Water Cost $	Current Total Cost $	Proposed Energy & Water Use and Costs: Future Total Annual Use - Electric: Consume kWh	Future Total Annual Use - Electric: Demand kW	Future Gas Use (Therms)	Future Water Use (CCF)	Future Electric Cost $	Future Gas Cost $	Future Water Cost $	Future Total Cost $	Proposed Savings: Annual Savings Electric: Consume kWh	Annual Savings Electric: Demand kW	Annual Gas Savings (Therms)	Annual Water Savings (CCF)	Annual Resource Savings $	Annual Maint. Savings $	Initial Labor/Mat'l Cost $	Estimated Utility Incentive $	Final Labor/Mat'l Cost $	Simple Payback Years
		Water Conservation Measures																										
Yes	ECM-JLES-W1	Water Retrofit/Replacement - This measure will investigate water and sewer savings opportunities by installing low consumption fixture or devices.	-	-	167	439	$ -	$ 196	$ 5,103	$ 5,299	-	-	38	172	$ -	$ 44	$ 1,999	$ 2,043	-	-	129	267	$ 3,256	$ -	$ 17,925	$ -	$ 17,925	5.51
	Fords Prairie Elementary School (FPES)																											
		Lighting Conservation Measures																										
Yes	ECM-FPES-L1	Lighting Retrofit/Replacement - This measure will retrofit or replace any remaining T-12, magnetic ballast or incendescant fixtures with T-8, electronic ballast and compact flourescent technology.	170,484	576	-	-	$ 11,047	$ -	$ -	$ 11,047	76,441	250	-	-	$ 4,916	$ -	$ -	$ 4,916	94,043	327	-	-	$ 6,131	$ -	$ 37,907	$ -	$ 37,907	6.18
		Water Conservation Measures																										
Yes	ECM-FPES-W1	Water Retrofit/Replacement - This measure will investigate water and sewer savings opportunities by installing low consumption fixture or devices.	4,937	-	-	410	$ 250	$ -	$ 4,762	$ 5,012	1,122	-	-	172	$ 57	$ -	$ 1,994	$ 2,051	3,815	-	-	238	$ 2,961	$ -	$ 15,789	$ -	$ 15,789	5.33
	Oakview Elementary School (OES)																											
		Lighting Conservation Measures																										
Yes	ECM-OES-L1	Lighting Retrofit/Replacement - This measure will retrofit or replace any remaining T-12, magnetic ballast or incendescant fixtures with T-8, electronic ballast and compact flourescent technology.	109,904	358	-	-	$ 7,065	$ -	$ -	$ 7,065	50,852	166	-	-	$ 3,269	$ -	$ -	$ 3,269	59,052	192	-	-	$ 3,796	$ -	$ 25,999	$ -	$ 25,999	6.85
		Water Conservation Measures																										
Yes	ECM-OES-W1	Water Retrofit/Replacement - This measure will investigate water and sewer savings opportunities by installing low consumption fixture or devices.	4,232	-	-	196	$ 215	$ -	$ 2,281	$ 2,495	962	-	-	76	$ 49	$ -	$ 879	$ 928	3,270	-	-	121	$ 1,567	$ -	$ 8,099	$ -	$ 8,099	5.17
	Washington Elementary School (WES)																											
		Lighting Conservation Measures																										
Yes	ECM-WES-L1	Lighting Retrofit/Replacement - This measure will retrofit or replace any remaining T-12, magnetic ballast or incendescant fixtures with T-8, electronic ballast and compact flourescent technology.	180,795	633	-	-	$ 11,805	$ -	$ -	$ 11,805	85,292	315	-	-	$ 5,639	$ -	$ -	$ 5,639	95,503	317	-	-	$ 6,166	$ -	$ 44,124	$ -	$ 44,124	7.16
		Water Conservation Measures																										
Yes	ECM-WES-W1	Water Retrofit/Replacement - This measure will investigate water and sewer savings opportunities by installing low consumption fixture or devices.	4,937	-	-	328	$ 250	$ -	$ 3,811	$ 4,061	1,122	-	-	138	$ 57	$ -	$ 1,609	$ 1,665	3,815	-	-	190	$ 2,396	$ -	$ 13,581	$ -	$ 13,581	5.67
	Administration Office (AO)																											
		Lighting Conservation Measures																										
No	ECM-AO-L1	**- MEASURE NOT SELECTED**																										
		Water Conservation Measures																										
No	ECM-AO-W1	**- MEASURE NOT SELECTED**																										
	Maintenance Facility (MF)																											
		Lighting Conservation Measures																										
No	ECM-MF-L1	**- MEASURE NOT SELECTED**																										
		Water Conservation Measures																										
No	ECM-MF-W1	**- MEASURE NOT SELECTED**																										
		Totals																	**734,588**	**1,938**	**10,743**	**1,766**	**$ 80,397**	**$ -**	**$ 842,938**	**$ -**	**$ 842,938**	**10.48**

EXHIBIT EN- 2010-080 A (1)

ENERGY SERVICES PROPOSAL – CENTRALIA SCHOOL DISTRICT

For: **Centralia School District**
Centralia, Washington

By: **Quantum Engineering & Development, Inc.**
Quantum Engineering Project Number 046-2009-01

January 21, 2010

TABLE OF CONTENTS

EXECUTIVE SUMMARY

A. SUMMARY & PROPOSED SERVICES 1
B. PROJECT DESCRIPTION 1
C. PROJECT BENEFITS 1
D. GUARANTEES 3
E. CONCLUSION 3

I. FACILITY DESCRIPTION 4

A. BUILDING 4
B. MECHANICAL SYSTEMS 6
C. LIGHTING SYSTEMS 10
D. WATER SYSTEMS 10
E. BUILDING SHELL 10

II. ENERGY CONSERVATION MEASURES (ECM'S) TO BE INSTALLED 11

A. HVAC SYSTEMS 11
B. LIGHTING SYSTEMS 11
C. WATER USING SYSTEMS 12

III. ESCO (ENERGY SERVICES COMPANY) SERVICES 13

IV. PROJECT COSTS 15

A. MAXIMUM PROJECT COST 15
B. PROJECT COST TABLE 15
C. ITEMS INCLUDED IN MAXIMUM PROJECT COST 16
D. CONSTRUCTION CONTINGENCY 17
E. ONGOING SERVICES 17
F. ACCOUNTING RECORDS 17
G. RECONCILIATION OF LABOR & MATERIAL COSTS 18

V. RECOMMENDATIONS FOR REPLACEMENT OF EXISTING EQUIPMENT 18

VI. STANDARDS OF COMFORT SERVICE 18

A. HVAC COMFORT 18
B. ILLUMINATION LEVELS 18

VII. BASELINE ENERGY CONSUMPTION 19

VIII. ESTIMATED ANNUAL SAVINGS AMOUNT AND UTILITY INCENTIVE 20

IX. METHOD OF CALCULATING ENERGY SAVINGS AND ENERGY COST SAVINGS 20

A. ENERGY AUDIT 20
B. CALCULATION OF SAVINGS 20

X. FINANCING 21

XI. ENERGY SAVINGS GUARANTEE 21

XII. ESCO COMPENSATION 21

A. PAYMENTS 21
B. TAX INCENTIVES 22

TABLE OF CONTENTS

XIII. TERM OF AGREEMENT 22

XIV. TERMINATION VALUE 22

XV. PROJECT SCHEDULE 22

XVI. EXTENT OF SUBCONTRACTING 22

XVII. INSURANCE AND BONDING 23

XVIII. RENEGOTIATION 23

XIX. EXHIBITS AND TABLES 24

TABLE 1 Financial Analysis
TABLE 2-1 Full List of Measures
TABLE 2-2 Recommended Measures
EXHIBIT 1 Detailed Energy Calculations (provided separately on CD-ROM)
Detailed Lighting Spreadsheets (provided separately on CD-ROM)
Detailed Water Audit Calculations (provided separately on CD-ROM)
EXHIBIT 2 Bond Form (provided separately & incorporated herein)
EXHIBIT 3 Energy Services Agreement (provided separately & incorporated herein)

EXECUTIVE SUMMARY

A. SUMMARY & PROPOSED SERVICES

Quantum Engineering & Development, Inc. (Quantum Engineering) is pleased to present this proposal for the implementation of energy efficiency measures for Centralia School District.

This Proposal follows the outline contained in Section 2 of the Energy Services Agreement. It presents the contractual terms under which Quantum Engineering, Centralia School District, and the Department of General Administration will work together over the term of the project. This Proposal describes the scope, costs, guarantees, and other aspects of the project.

The services included in this Proposal include design, construction, system verification, and ongoing services for the first year. Although Centralia School District will operate and maintain the new equipment, Quantum Engineering will provide important monitoring services during the first year to help insure the predicted savings are achieved. Ongoing services are also offered throughout the term of the loan (years 2-10) for an added fee.

B. PROJECT DESCRIPTION

The project greatly improves comfort and visibility in the schools, while saving energy and water. Centralia Middle School and Edison Elementary School both will receive upgrades to their respective heating and ventilation control systems. These controls upgrades will also be fully commissioned. The boiler systems at Centralia Middle School, Edison Elementary School and Jefferson Lincoln Elementary School will be replaced with high efficiency condensing boiler systems. The existing control systems at Centralia High School and Jefferson Lincoln Elementary School will be fully commissioned for optimal performance. The lighting systems in Centralia High School, Edison Elementary School, Jefferson Lincoln Elementary School, Fords Prairie Elementary School, Oakview Elementary School, and Washington Elementary School will be retrofit with T-8, electronic ballast and compact fluorescent technology. The plumbing systems at Centralia High School, Centralia Middle School, Edison Elementary School, Jefferson Lincoln Elementary School, Fords Prairie Elementary School, Oakview Elementary School, and Washington Elementary School will be retrofit or replaced with low flow devices and fixtures.

C. PROJECT BENEFITS

Financial Benefits

Table 1 shows project cost and savings related to this project. The guaranteed maximum project cost is $1,150,431. The project is projected to receive an OSPI Energy Efficiency Grant of $500,000.

All construction costs will be open book to the Owner, and any cost savings related to savings on our labor & material costs will revert to the Owner at the end of the project.

The project will produce over $86,672 annually in energy and maintenance related savings. Based on State Treasurer financing, the project produces a positive cash flow of $336 in the first year of operation. This is based on the district financing $689,116 through the State Treasurer's lease purchase program, via a ten year loan, and based on an OSPI grant of $500,000, and a

capitol investment of $100,000. The savings grows to $4,754 in year five due to energy rate increases.

Maintenance Related Benefits

Lighting maintenance savings of $6,859 per year are estimated due to reduced need for replacement lamps and ballasts for the next five years. While there will be significant savings in maintenance cost due to failed HVAC controls equipment, no maintenance savings are factored into this analysis.

Environmental Benefits

In addition to building improvements and energy savings, there is a significant positive impact on the environment as a result of this project. The energy savings produced as a result of this project will directly reduce the amount of power produced by the Utility. Because much of our electricity in the State of Washington is produced through hydroelectric power, the savings from this project will improve stream and river flows for endangered species such as salmon. The cumulative impact of many of these projects may very well result in saving a species from extinction. Also, reductions in emissions include over 853,825 lbs of CO_2 annually, and 92 lbs. of nitrous oxides.

D. GUARANTEES

Quantum Engineering guarantees that the project cost, related specifically to energy savings and the project scope, will not exceed the maximum price of $1,150,431 (project cost before sales tax and E&AS management fee). Also, Quantum Engineering is guaranteeing that the project will perform such that the energy savings will meet or exceed 661,473 kilowatt hours per year, 1,744 kW per year, 9,225 therms per year, and 1,590 CCF per year. This corresponds with 90 % of the projected energy savings.

E. CONCLUSION

This project represents an excellent opportunity for Centralia School District to greatly improve their facilities while saving energy. The project provides over $1,290,000 in facility improvements with limited capital investment. Quantum Engineering looks forward to working with Centralia School District and General Administration in making this project a success.

I. FACILITY DESCRIPTION

A. BUILDING

Centralia High School

Centralia High School is located at 813 Eshom Road, in Centralia Washington. The school consists of multiple classrooms, commons, gymnasium, administration offices, kitchen and library; totaling approximately 151,770 square feet.

The fixed building is constructed of structural steel pipe columns and glu-lam beams, wood studs with brick veneer exterior walls and metal fascia. The roof systems are constructed of steel joists and metal deck, with steel pitched roofs and a roll down, torch-down asphalt roof system.

Hours of operation for instruction are from 7:55 AM to 2:30 PM Monday through Friday with extended hours for the custodial staff and after school activities. The administration areas typically operate from 7:00 AM to 4:00 PM Monday through Friday.

Centralia Middle School

Centralia Middle School is located at 901 Johnson Road, in Centralia Washington. The school consists of multiple classrooms, a gymnasium, multi-purpose room, administration offices, kitchen and library; total approximately 91,938 square feet.

The fixed building is constructed of structural steel pipe columns and glu-lam beams, wood studs with brick veneer exterior walls. The roof systems are constructed of wood trusses and tongue and groove wood deck, with three-tab composition roofing.

Hours of operation for instruction are from 8:10 AM to 2:40 PM Monday through Friday with extended hours for the custodial staff and after school activities. The administration areas typically operate from 7:30 AM to 3:45 PM Monday through Friday.

Edison Elementary School

Edison Elementary School is located at 607 H Street, in Centralia Washington. The school's main building has multiple classrooms, a gymnasium/multi-purpose room, kitchen, administration offices and library; totaling approximately 35,553 square feet.

The fixed building is constructed of structural steel pipe columns and glu-lam beams, wood studs with brick veneer exterior walls. The roof systems are constructed of wood trusses and tongue and groove wood deck, with three-tab composition roofing.

Hours of operation for instruction are from 8:20 AM to 2:21 PM Monday through Friday with extended hours for the custodial staff and after school activities. The administration areas typically operate from 8:00 AM to 3:30 PM Monday through Friday.

Jefferson Lincoln Elementary School

Jefferson Lincoln Elementary School is located at 400 West Summa Street, in Centralia Washington. The school's main building has multiple classrooms, a gymnasium/multi-purpose room, kitchen, administration offices and library; totaling approximately 48,090 square feet.

The fixed building is constructed of structural steel pipe columns and glu-lam beams, wood studs with wood and brick veneer exterior walls. Glu-lam beams and car decking support and a role down, torch-down asphalt roof system.

Hours of operation for instruction are from 8:20 AM to 2:21 PM Monday through Friday with extended hours for the custodial staff and after school activities. The administration areas typically operate from 7:30 AM to 4:00 PM Monday through Friday.

Fords Prairie Elementary School

Fords Prairie Elementary School is located at 1620 Harrison Avenue, in Centralia Washington. This school consists of multiple classrooms, a gymnasium/multi-purpose room, kitchen, administration offices and library. Currently, the main building totals approximately 38,740 square feet.

The fixed building is constructed of structural steel pipe columns and glu-lam beams, wood studs with brick veneer exterior walls and metal fascia. The roof systems are constructed of steel joists and metal deck, with steel pitched roofs and a roll down, torch-down asphalt roof system.

Hours of operation for instruction are from 8:20 AM to 2:21 PM Monday through Friday with extended hours for the custodial staff and after school activities. The administration areas typically operate from 7:30 AM to 4:00 PM Monday through Friday.

Oakview Elementary School

Oakview Elementary School is located at 201 Oakview Avenue, in Centralia Washington. The school's main building has multiple classrooms, a gymnasium/multi-purpose room, kitchen, administration offices and library. Currently, the main building totals approximately 41,094 square feet.

The fixed building is constructed of structural steel pipe columns and glu-lam beams, wood studs with brick veneer exterior walls. The roof systems are constructed of wood trusses and tongue and groove wood deck, with three-tab composition roofing.

Hours of operation for instruction are from 8:25 AM to 3:00 PM Monday through Friday with extended hours for the custodial staff and after school activities. The administration areas typically operate from 7:30 AM to 4:00 PM Monday through Friday.

Washington Elementary School

Washington Elementary School is located at 800 Field Street, in Centralia Washington. The school's main building has multiple classrooms, a gymnasium/multi-purpose room, kitchen, administration offices and library. Currently, the main building totals approximately 48,483 square feet.

The fixed building is constructed of structural steel pipe columns and glu-lam beams, wood studs with brick veneer exterior walls and metal fascia. The roof systems are constructed of steel joists and metal deck, with steel pitched roofs and a hypalon membrane roof system.

Hours of operation for instruction are from 8:25 AM to 3:00 PM Monday through Friday with extended hours for the custodial staff and after school activities. The administration areas typically operate from 7:30 AM to 4:00 PM Monday through Friday.

B. MECHANICAL SYSTEMS

Centralia High School

A Barber-Coleman Direct Digital Control (DDC) and Energy Management System (EMS) provide runtime and temperature control at Centralia High School.

The classroom portion of Centralia High School is served by rooftop multi-zone air handling units. These units are manufactured by Lennox and are equipped with supply fans, hot deck with associated electric resistance heating coils, ventilation cold deck, mixing dampers with full economizer capability, and supply zones with associated zone control dampers. These units are being scheduled through the EMS and currently operate from 5:00 AM to 2:30 PM Monday through Friday and off on the weekends.

The commons is served by two heating and ventilation (H&V) units located on the roof. These units are manufactured by Lennox and are equipped with supply fans, electric resistance heating coils and mixing dampers with full economizer capability. These units are being scheduled through the EMS and currently operate from 6:00 AM to 3:00 PM Monday through Friday and off on the weekends.

The gymnasium is served by four H&V units located in upper level mechanical rooms at each corner of the gymnasium. These units are manufactured by Lennox and are equipped with supply fans, electric resistance heating coils and mixing dampers with full economizer capability. These units are being scheduled through the EMS and currently operate from 6:00 AM to 2:30 PM Monday through Friday and off on the weekends.

The locker rooms and shops are served by ceiling mounted H&V units. These units are manufactured by Lennox and are equipped with supply fans, electric resistance heating coils and mixing dampers with full economizer capability. These units are being scheduled through the EMS and currently operate from 6:00 AM to 2:30 PM Monday through Friday and off on the weekends.

Recommendations at Centralia High School include retro-commissioning of the existing control system. This process will implement proper runtime schedules, and verify operating sequences to save energy and enhance overall system performance.

Centralia Middle School

A Barber-Coleman Network 8000 DDC and EMS provides runtime and temperature control at Centralia Middle School. Based on information provided by the maintenance staff, two of the supervisory controllers are currently failed.

Unit ventilators (UV's) and H&V units provide the heating and ventilation for the school. These systems are equipped with supply fans, hot water heating coils, and mixing dampers with full economizer capability.

The monitoring data in Figure 1 illustrates that AHU-4 (Commons) is currently operating 24/7 and providing more than 90% outside air during the heating mode. This unit is associated with one of the failed controllers.

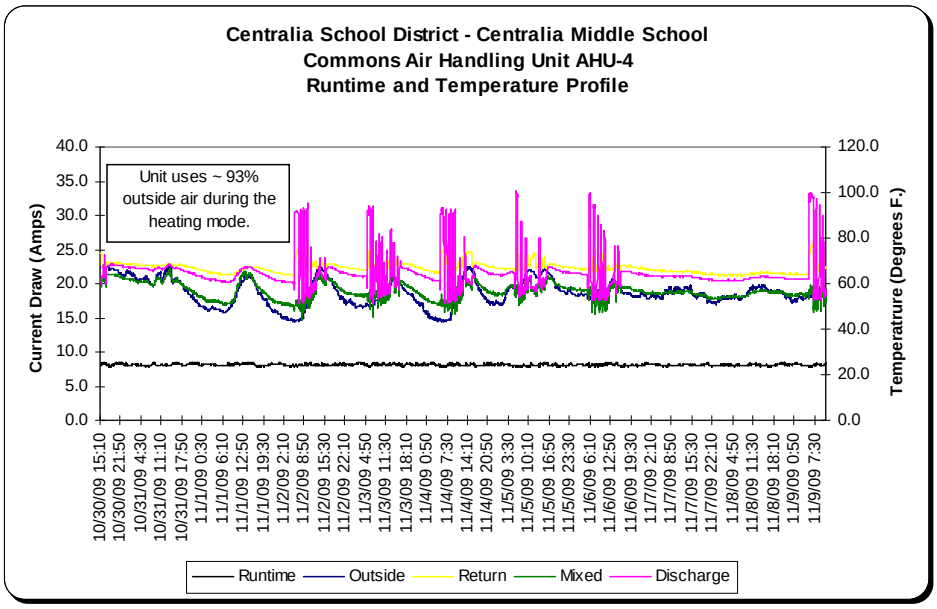

Figure 1 – Commons Air Handling Unit AHU-4 Runtime and Temperature Profile.

Heating hot water for Centralia Middle School is generated by three Raypack gas fired atmospheric boilers located in the main boiler mechanical room. Each boiler is sized for 1,285,000 Btu output at 83% efficiency. A primary / secondary piping system is utilized to distribute hot water out to the unit for heating. Combustion efficiency testing performed on each boiler revealed an average combustion efficiency of 82%.

Conservation measures developed for Centralia Middle School include replacing the existing gas fired boilers with new high efficiency condensing boilers, and upgrading the existing DDC and EMS with CO2 demand ventilation controls for the commons and gymnasium. CO2 demand ventilation control regulates the amount of outside air being delivered to the associated spaces based on actual occupancy. The controls upgrade will also replace the two fail supervisory controllers, and fully commission the system for optimal performance.

Edison Elementary School

Temperature and ventilation control at Edison Elementary School consist of an antiquated electronic and pneumatic control system. This system is marginally functional, out of calibration, and lacks remote monitoring capabilities.

Two air handling units (AHU-1 and AHU-2) located in mechanical attics at each end of the building provide conditioned primary air to hot water terminal units located throughout the school. These air handling units are equipped with supply fans, direct expansion (DX) cooling coils with remote condensing units, and mixing dampers with full economizer capability.

The multi-purpose room is served by a dedicated air handling unit (AHU-3) located in the adjacent store room. This unit is equipped with a supply fan, hot water heating coil, and mixing dampers with full economizer capability.

The monitoring data in Figure 2 illustrates that AHU-3 is being schedule to run from 7:00 AM to 5:00 PM on Monday, Tuesday, Thursday and Friday, and from 1:00 AM to 5:00 PM on Wednesday. This data also indicates that the air handling unit provides minimal to no outside air during operation.

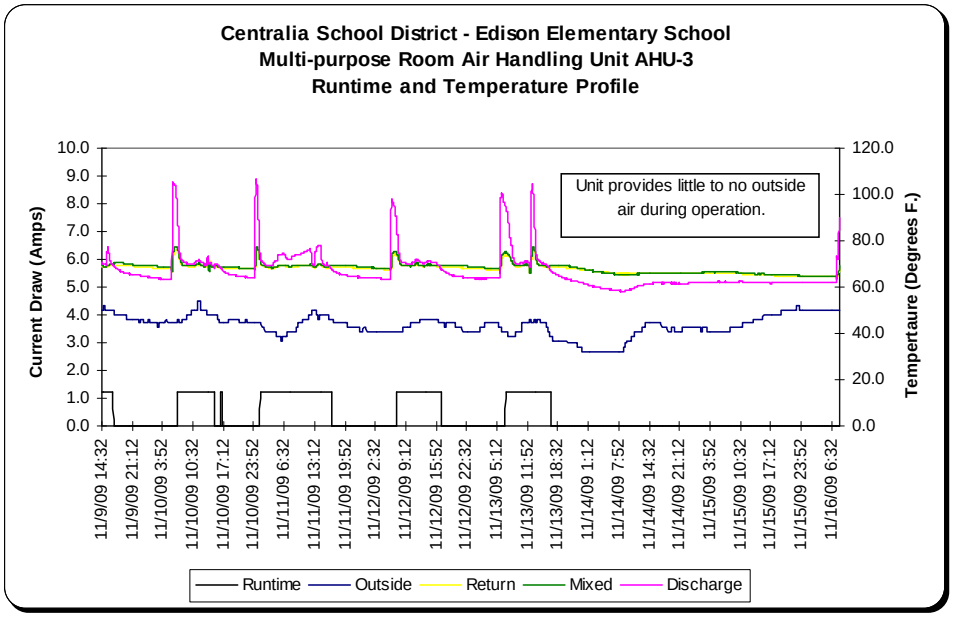

Figure 2 – MP Room Air Handling Unit AHU-3 Runtime and Temperature Profile

A Cleaver Brooks steam boiler, model number M4S-2500, provides low pressure steam to a steam-to-hot water converter located in the basement mechanical room. Hot water is then distributed throughout the school via three circulating pumps. Combustion testing revealed that the boiler is currently operating at 82% efficiency.

Recommendations at Edison Elementary School include replacing the existing steam boiler with a new high efficiency condensing boiler, and replacing the existing pneumatic control system with a new DDC and EMS. The new control system will be fully commissioned to provide optimal performance.

Jefferson Lincoln Elementary School

A pneumatic control system provides the runtime and temperature control for Jefferson Lincoln Elementary School.

Hot water unit ventilators provide heating and ventilation for the majority of the building. These unit ventilators are equipped with fractional horsepower supply fans, hot water heating coils, and mixing dampers with full economizer capability.

The multi-purpose room is served by a dedicated air handling unit. This unit is equipped with a supply fan, hot water heating coil , and mixing dampers with full economizer capability.

The monitoring data in Figure 3 indicates that AHU-1 is currently schedule to run from 6:00 AM to 2:00 PM Monday through Friday and off on the weekends. This data also illustrates that AHU-1 provides more than 45% outside air during the heating mode.

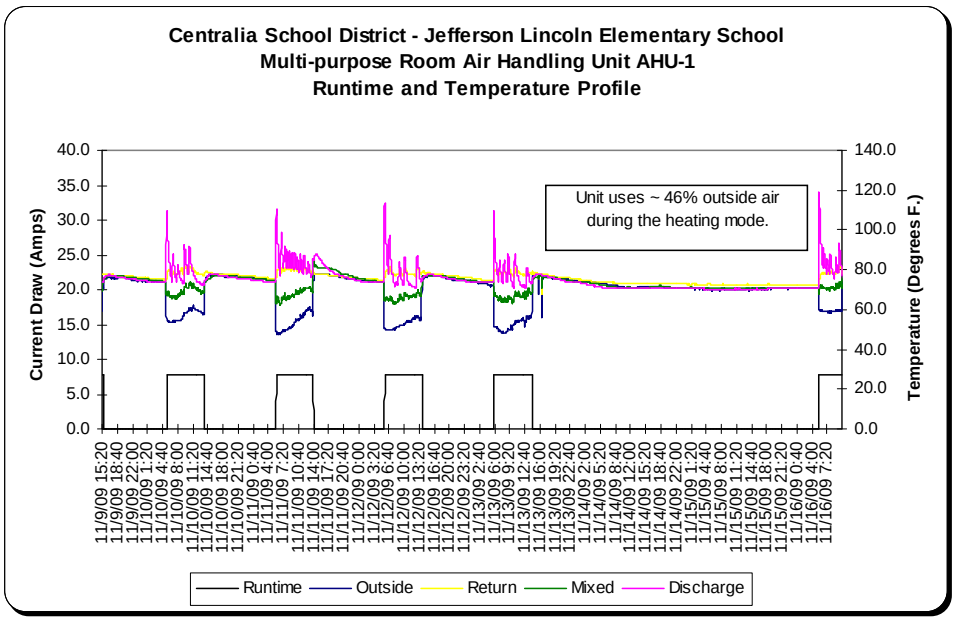

Figure 3 – MP Room Air Handling Unit AHU-1 Runtime and Temperature Profile

A Cleaver Brooks gas fired boiler, located in the main boiler mechanical room, provides hot water for heating Jefferson Lincoln Elementary School. This is a 2.1 MBH forced draft boiler; model number CB523.5. Combustion testing revealed that this boiler is currently operating at 82% efficiency.

Recommendations for Jefferson Lincoln Elementary School include replacing the existing boiler with a new high efficiency condensing boiler, and commissioning the existing pneumatic control system for optimal performance. Commissioning will also include calibrating the existing pneumatic thermostats.

See Exhibit 1 for the detailed energy calculations.

C. LIGHTING SYSTEMS

The lighting systems throughout the Centralia School District consist mainly of T-12 lamps with magnetic ballasts. In addition, numerous HID and incandescent lamps were found. The proposed lighting retrofits will replace the T-12 lamps and magnetic ballasts with T-8 lamps and electronic ballast technology resulting in reduced maintenance and improved systems. These retrofits will also enhance lighting levels in many areas that are currently under lit, and will enrich color rendering throughout the facilities. In addition, many HID and incandescent fixtures will be retrofitted or replaced with fluorescent technology.

Exit lights are incandescent, with a few LED fixtures.

Recommended lighting retrofits and replacements will include the following Schools:

- Centralia High School
- Edison Elementary School
- Jefferson Lincoln Elementary School
- Fords Prairie Elementary School
- Oakview Elementary School
- Washington Elementary School

See Exhibit 1 for the detailed lighting spreadsheets.

D. WATER SYSTEMS

The water using systems at Centralia School District consist of interior plumbing (faucets, urinals, water closets),

Recommended water retrofits and replacements will include the following Schools:

- Centralia High School
- Centralia Middle School
- Edison Elementary School
- Jefferson Lincoln Elementary School
- Fords Prairie Elementary School
- Oakview Elementary School
- Washington Elementary School

The proposed plumbing retrofits include replacing existing 3.5 GPF toilets with new 1.6 GPF toilets, replacing the existing 2.0 GPF urinals with new .25 GPF urinals, installing 1.5 GPM aerators on classroom sinks, and .5 aerators on restroom lavatories.

See Exhibit 1 for the detailed water audit calculations.

E. BUILDING SHELL

No conservation measures related to the building shell were recommended.

II. ENERGY CONSERVATION MEASURES (ECM's) TO BE INSTALLED

A. HVAC SYSTEMS

Centralia High School (CHS)

ECM-CHS-M3 – Retro-commissioning of the existing controls system: This measure will verify that the existing control sequences are operating as intended; including but not limited to runtime schedules, economizer operation, morning warm-up and night setback sequences.

Centralia Middle School (CMS)

ECM-CMS-M1 – Replace Boilers: This measure will replace the existing Raypack boilers with new high efficiency condensing boilers.

ECM-CMS-M3 – Upgrade existing DDC Energy Management System (EMS): This measure will implement "Demand Ventilation Control" using CO2 sensors and "occupied stand-by" control using occupancy sensors for areas of sporadic occupancy. This measure will also replace two failing control zone supervisors.

Edison Elementary School (EES)

ECM-EES-M1 – Replace Boilers: This measure will replace the existing Cleaver Brooks steam boiler with new high efficiency condensing hot water boilers.

ECM-CMS-M2 – Upgrade existing DDC Energy Management System (EMS): his measure will upgrade the existing Pneumatic Control system to full DDC and implement "Demand Ventilation Control" using CO2 sensors and "occupied stand-by" control using occupancy sensors for the Multi-purpose Room.

Jefferson Lincoln Elementary School (JLES)

ECM-JLES-M1 – Replace Boilers: This measure will replace the existing Cleaver Brooks hot water boiler with new high efficiency condensing hot water boilers.

ECM-CMS-M3 – Retro-commissioning of the existing controls system: This measure will verify that the existing control sequences are operating as intended; including but not limited to runtime schedules, economizer operation, morning warm-up and night setback sequences.

B. LIGHTING SYSTEMS

Centralia High School (CHS)

ECM-CHS-L1 – Lighting Retrofit and Replacement: This measure will retrofit or replace any remaining T-12, magnetic ballast or incandescent fixtures with T-8, electronic ballast and compact fluorescent technology. Additionally, many of the HID fixtures will be replaced with fluorescent technology.

Edison Elementary School (EES)

ECM-EES-L1 – Lighting Retrofit and Replacement: This measure will retrofit or replace any remaining T-12, magnetic ballast or incandescent fixtures with T-8, electronic ballast and compact fluorescent technology. Additionally, many of the HID fixtures will be replaced with fluorescent technology.

Jefferson Lincoln Elementary School (JLES)

ECM-JLES-L1 – Lighting Retrofit and Replacement: This measure will retrofit or replace any remaining T-12, magnetic ballast or incandescent fixtures with T-8, electronic ballast and compact fluorescent technology. Additionally, many of the HID fixtures will be replaced with fluorescent technology.

Fords Prairie Elementary School (FPES)

ECM-FPES-L1 – Lighting Retrofit and Replacement: This measure will retrofit or replace any remaining T-12, magnetic ballast or incandescent fixtures with T-8, electronic ballast and compact fluorescent technology. Additionally, many of the HID fixtures will be replaced with fluorescent technology.

Oakview Elementary School (OES)

ECM-OES-L1 – Lighting Retrofit and Replacement: This measure will retrofit or replace any remaining T-12, magnetic ballast or incandescent fixtures with T-8, electronic ballast and compact fluorescent technology. Additionally, many of the HID fixtures will be replaced with fluorescent technology.

Washington Elementary School (WES)

ECM-WES-L1 – Lighting Retrofit and Replacement: This measure will retrofit or replace any remaining T-12, magnetic ballast or incandescent fixtures with T-8, electronic ballast and compact fluorescent technology. Additionally, many of the HID fixtures will be replaced with fluorescent technology.

C. WATER USING SYSTEMS

Centralia High School (CHS)

ECM-CHS-W1 – Water Retrofit and Replacement: This measure will retrofit or replace toilets, urinals, and sinks with low consumption fixtures and devices.

Centralia Middle School (CMS)

ECM-CMS-W1 – Water Retrofit and Replacement: This measure will retrofit or replace toilets, urinals, and sinks with low consumption fixtures and devices.

Edison Elementary School (EES)

ECM-EES-W1 – Water Retrofit and Replacement: This measure will retrofit or replace toilets, urinals, and sinks with low consumption fixtures and devices.

Jefferson Lincoln Elementary School (JLES)

ECM-JLES-W1 –Water Retrofit and Replacement: This measure will retrofit or replace toilets, urinals, and sinks with low consumption fixtures and devices.

Fords Prairie Elementary School (FPES)

ECM-FPES-W1 – Water Retrofit and Replacement: This measure will retrofit or replace toilets, urinals, and sinks with low consumption fixtures and devices.

Oakview Elementary School (OES)

ECM-OES-W1 –Water Retrofit and Replacement: This measure will retrofit or replace toilets, urinals, and sinks with low consumption fixtures and devices.

Washington Elementary School (WES)

ECM-WES-W1 – Water Retrofit and Replacement: This measure will retrofit or replace toilets, urinals, and sinks with low consumption fixtures and devices.

III. ESCO (Energy Services Company) SERVICES

Quantum Engineering will provide the following services:

1. Energy Audit: The energy audit is complete and is included herein.
2. Design Services: Provide a detailed engineering design as needed to obtain Owner review and approval of the proposed system, and to obtain competitive bids. Provide construction support services, start-up, and testing. Provide as-built drawings and relevant O&M manuals.
3. Construction: Provide, or cause to be provided, all material, labor, and equipment, including paying for permits, fees, bonds, and insurance, required for the complete and working installation of the ESCO equipment.
   a) The ESCO may perform portions of the construction work, or may subcontract portions to qualified firms. In either case, the ESCO will share information regarding actual costs of the work with the Owner.
   b) The lighting retrofit is substantially a maintenance activity. As such, lighting maintenance workers will be used to perform fixture retrofits. These workers will be paid the applicable Washington State Department of Labor & Industries prevailing wage for the county of the work, under a classification of “Electrical Fixture Maintenance Workers” or equivalent.
   c) When the ESCO has completed the installation of the Equipment, including start-up and operation verification and training in accordance with the Proposal, the ESCO will provide to Owner a "Notice of Commencement of Energy Savings" and Owner shall have 10 days within which to accept the Notice.
   d) At the conclusion of the last phase of the project, the ESCO will submit a "Notice of Substantial Completion" to the Owner.
4. Construction Management: Provide construction management services to coordinate and supervise the work. The owner is expected to coordinate day-to-day communications with tenants and any scheduling of tenant relocations in and around occupied areas. The ESCO will provide construction superintendence of the work, and will coordinate any impact upon building tenants with the Owner.
5. Operation training: The ESCO will provide on-going training for the building staff during construction.

6. Performance Maintenance: The ESCO will provide on-going monitoring and support services to help insure the predicted savings are achieved throughout the first year of the agreement. Specific tasks will include:

   a) Year One (the first year following Notice of Commencement of Energy Savings):

      (1) *Annual review of Energy Management System (EMS) and system performance.* This will be done via trend logs of system performance. A detailed report will indicate system performance for the first year.

      (2) *Annual analysis of functionality of lighting and plumbing equipment.* This will be done via review of the installed lighting and plumbing systems.

      (3) *Attend one annual meeting* to review the ESCO equipment performance and reconcile energy savings.

7. Equipment Maintenance: The ESCO will provide no equipment maintenance or repairs after the warranty period. Following the completion of the installation and Owner acceptance of the Equipment, the Owner shall provide all necessary service, repairs, and adjustments to the Equipment so that the Equipment will perform in the manner and to the extent set forth in the Proposal. The ESCO shall have no obligation to service or maintain the Equipment after the warranty period.

8. Operation and Maintenance Procedures: None provided.

9. Warranty: The ESCO will warrant equipment for one year following Notice of Substantial Completion. The ESCO will specify a 5-year warranty on lighting ballasts. For all other equipment, the ESCO will obtain an extended warranty or service agreement only if this does not cause the Guaranteed Maximum Cost to be exceeded.

10. Hazardous Waste: Should the project require removal or disposal of hazardous material, the ESCO may have the hazardous material or substances removed and disposed of at the request of the Owner. The ESCO will not assume ownership of the material, but may act on behalf of the Owner to properly remove and dispose of the material. The Owner shall pay the ESCO for the cost of such work. The Owner agrees and acknowledges that it has not relied on or employed the ESCO to analyze or identify the presence of any hazardous substance on the Owner's premises. The cost of hazardous material abatement and disposal is not included in this proposal, with the exception of PCB ballasts.

IV. PROJECT COSTS

A. MAXIMUM PROJECT COST

The ESCO guarantees that the Maximum Project Cost will not exceed one million one hundred fifty thousand four hundred thirty-one and no/100 Dollars ($1,150,431). This cost does not include sales tax, or E&AS Project Management Fees, which are estimated. With sales tax and E&AS fees included, the Project Cost is one million two hundred eighty-nine thousand one hundred sixteen and no/100 Dollars ($1,289,116). The ESCO does not guarantee the value of sales tax, E&AS fees, or the utility incentive.

B. PROJECT COST TABLE

PROJECT COSTS

	Mechanical and Water	Lighting	Total Project costs
Engineering Audit	$ 20,543	$ -	$ 20,543
Estimated Labor and Material Cost	$ 568,708	$ 270,316	$ 839,024
Design @ 10.0% of Labor & Material	$ 56,871	$ -	$ 56,871
Design @ 4.0% of Labor & Material'	$ -	$ 10,813	$ 10,813
Construction Mgt @ 5.0% of Labor & Material	$ 28,435	$ 13,516	$ 41,951
Bonding @ 1.6% of Labor & Material	$ 9,099	$ 4,325	$ 13,424
ESCO overhead and profit @ 15.0% of Labor & Material	$ 85,306	$ 40,547	$ 125,854
Subtotal:	$ 768,963	$ 339,517	$ 1,108,480
Construction contingency @ 5.0% of CC	$ 28,435	$ 13,516	$ 41,951
Subtotal - Maximum Project Cost:	$ 797,399	$ 353,033	$ 1,150,431
Est. Sales Tax @ 7.9% of Maximum Project Cost	$ 62,994	$ 27,890	$ 90,884
E&AS Project Management Fees	$ -	$ -	$ 47,800
TOTAL PROJECT PRICE:	$ 860,393	$ 380,923	$ 1,289,116
Estimated Utility Incentive			$ -
Estimated Client Net Cost			$ 1,289,116
Client initial cash payment			$ 100,000
Amount of OSPI Grant Request			$ 500,000
Amount to be financed by client:			**$ 689,116**
Year 2 Cash Flow:			**$ 1,534**

C. ITEMS INCLUDED IN MAXIMUM PROJECT COST

1. Maximum project costs include the following:

a) Engineering audit, including the cost for preparation of this proposal. This is a fixed fee.

b) Engineering design. This is a fixed fee.

c) Construction management services. This is a fixed fee.

d) Installation of the ESCO Equipment including the following costs:

(1) All costs paid by the ESCO for the installation of the ESCO equipment. This includes costs paid to subcontractors or directly to ESCO personnel, when related to installation or system verification of the ESCO equipment.

(2) The portion of reasonable travel, lodging & meals expenses of the ESCO or of its officers or employees incurred while traveling in discharge of duties connected with the Work.

(3) Cost of all equipment, materials, supplies and equipment incorporated in the Work, including costs of transportation thereof.

(4) Cost or rental charges, including transportation and maintenance, of all materials, supplies, equipment, temporary facilities and hand tools not owned by the workers, which are consumed in the performance of the Work, and cost less salvage value on such items used but not consumed which remain the property of the ESCO.

(5) Cost of premiums for all bonds and insurance, which the ESCO is required to purchase and maintain.

(6) Sales, use or similar taxes related to the Work and for which the ESCO is liable imposed by a governmental authority.

(7) Permit fees, royalties, and deposits lost for causes other than the ESCO's negligence.

(8) Losses and expenses not compensated by insurance or otherwise, sustained by the ESCO in connection with the Work, provided they have resulted from causes other than the fault or neglect of the ESCO. Such losses shall include settlements made with the written consent and approval of the Owner. If, however, such loss requires reconstruction and the ESCO is placed in charge thereof, he shall be paid for his services a fee.

(9) Minor expenses such as copies, long distance telephone calls, telephone service at the site, express mail services, and similar petty cash items.

(10) Demolition cost and cost of removal of all debris.

(11) Costs incurred due to an emergency affecting the safety of persons and property.

(12) Other costs incurred in the performance of the Work if and to the extent approved in advance in writing by the Owner.

(13) The cost of construction financing including contingency and an allowance for Owner initiated scope improvements.

(14) Cost of equipment startup, training, system verification and balancing performed by the ESCO.

(15) Bonding, Liability Insurance, and Builder's Risk Insurance.

(16) ESCO fee. This includes the ESCO's remuneration for compensation of personnel, expenses, risks related to the project, and profit. This is a fixed fee.

(17) Metering equipment costs for any permanent metering or monitoring equipment left on site.

(18) The ESCO shall provide a Schedule of Values at the end of construction bidding. The schedule of values will include all costs related to the installation of the ESCO equipment, excepting fixed fee items.

D. CONSTRUCTION CONTINGENCY

A construction contingency of $41,951 (not including sales tax) has been established for this project. The ESCO is authorized to expend the contingency for items necessary to complete the original scope of this project at its sole discretion. The ESCO shall not be allowed to mark-up contingency funds expended for items included in the original Scope of this project. The ESCO and Owner will jointly manage any contingency left after the project scope is completed. The ESCO shall be allowed to mark-up items beyond the original scope and approved by Owner. All unused construction contingency funds shall reduce the overall project cost to the Owner.

E. ONGOING SERVICES

Ongoing monitoring services for the first year are included in the project fees. After the end of Year 1, the ESCO will present a proposal to the Owner for ongoing monitoring & verification services. These services will monitor energy savings and energy savings measures, provide engineering assistance in maintaining the savings, as described in Section III. The owner may cancel these services at any time.

F. ACCOUNTING RECORDS

The ESCO shall check all material, equipment and labor entering into the Work and shall keep such full and detailed accounts as may be necessary for proper financial management under this Agreement. The accounting system shall be satisfactory to the Owner. The Owner shall be afforded access to all the ESCO's records, books, correspondence, instructions, drawings, receipts, vouchers, memoranda and similar data relating to this Contract, and the Contract shall preserve all such records for a period of three years, or for such longer period as may be required by law, after the final payment.

G. RECONCILIATION OF LABOR & MATERIAL COSTS

1. The financed amount is based on an estimate of Labor & Material costs. In recognition that actual Labor & Material costs may vary from the estimate, the following procedures are established to reconcile this difference:

   a) When actual Labor & Material costs exceed the estimated Labor & Material costs (plus Contingency), the additional expense will be borne by the ESCO without affecting the Owner's payment.

   b) When actual Labor & Material costs are less than the estimated Labor & Material costs (plus Contingency), the remaining funds will be retained by the Owner.

V. RECOMMENDATIONS FOR REPLACEMENT OF EXISTING EQUIPMENT

None.

VI. STANDARDS OF COMFORT SERVICE

A. HVAC COMFORT

The heating, ventilating and air conditioning (HVAC) systems provided by the ESCO will provide comfort and indoor air quality in accordance with Exhibit 3. This standard will pertain only to buildings and areas of buildings in which the ESCO is installing new HVAC equipment that has direct control over space comfort conditions. HVAC comfort conditions cannot be guaranteed when operable windows are open.

B. ILLUMINATION LEVELS

The lighting and illumination levels for lighting systems provided by the ESCO will comply with Exhibit 3.

VII. BASELINE ENERGY CONSUMPTION

Centralia High School

The average annual electrical usage (kWh) and demand (kW) for the Centralia High School in years 2007 and 2008 was 2,582,400 kWh and 8,049 kW with an associated cost of $166,073.

The average annual gas usage for the Centralia High School in years 2007 and 2008 was 5,722 therms with an associated cost of $7,144.

The average annual water usage for the Centralia High School in 2007 and 2008 was 1,276 CCF with an associated cost of $20,983.

Centralia Middle School

The average annual electrical usage (kWh) and demand (kW) for the Centralia Middle School in years 2007 and 2008 was 729,046 kWh and 2,090 kW with an associated cost of $57,070.

The average annual gas usage for the Centralia Middle School in years 2007 and 2008 was 22,674 therms with an associated cost of $29,765.

The average annual water usage for the Centralia Middle School in 2007 and 2008 was 1,235 CCF with an associated cost of $14,248.

Edison Elementary School

The average annual electrical usage (kWh) and demand (kW) for the Edison Elementary School in years 2007 and 2008 was 265,120 kWh and 1,094 kW with an associated cost of $18,618.

The average annual gas usage for the Edison Elementary School in years 2007 and 2008 was 18,636 therms with an associated cost of $22,777.

The average annual water usage for the Edison Elementary School in 2007 and 2008 was 384 CCF with an associated cost of $5,018.

Jefferson Lincoln Elementary School

The average annual electrical usage (kWh) and demand (kW) for the Jefferson Lincoln Elementary School in years 2007 and 2008 was 350,741 kWh and 1,632 kW with an associated cost of $27,967.

The average annual gas usage for the Jefferson Lincoln Elementary School in years 2007 and 2008 was 4,646 therms with an associated cost of $6,206

The average annual water usage for the Jefferson Lincoln Elementary School in 2007 and 2008 was 509 CCF with an associated cost of $6,876.

Fords Prairie Elementary School

The average annual electrical usage (kWh) and demand (kW) for the Fords Prairie Elementary School in years 2007 and 2008 was 626,815 kWh and 2,092 kW with an associated cost of $42,998.

The average annual water usage for the Fords Prairie Elementary School in 2007 and 2008 was 728 CCF with an associated cost of $8,661.

Oakview Elementary School

The average annual electrical usage (kWh) and demand (kW) for the Oakview Elementary School in years 2007 and 2008 was 585,238 kWh and 2,640 kW with an associated cost of $42,983.

The average annual water usage for the Oakview Elementary School in 2007 and 2008 was 414 CCF with an associated cost of $5,020.

Washington Elementary School

The average annual electrical usage (kWh) and demand (kW) for the Washington Elementary School in years 2007 and 2008 was 683,315 kWh and 551 kW with an associated cost of $52,398.

The average annual water usage for the Oakview Elementary School in 2007 and 2008 was 510 CCF with an associated cost of $6,800.

VIII. ESTIMATED ANNUAL SAVINGS AMOUNT

1. The ESCO estimates that annual electrical costs will be reduced by $45,343. This estimate is based on an annual consumption being reduced by 734,970 kWh and demand being reduced by 1,938 kW (based on the sum of the monthly peak demand).
2. The ESCO estimates that annual gas cost will be reduced by $9,429. This estimate is based on the annual consumption being reduced by 10,250 Therms.
3. The ESCO estimates that annual water cost will be reduced by $25,040. This estimate is based on the annual consumption being reduced by 1,766 CCF (hundred cubic feet).

IX. METHOD OF CALCULATING ENERGY SAVINGS AND ENERGY COST SAVINGS

A. ENERGY AUDIT

The energy cost savings are calculated in Exhibit 1. These savings calculations have been reviewed and accepted by the Owner and the ESCO.

B. CALCULATION OF SAVINGS

1. The Owner and the ESCO agree that the energy savings exist if the ESCO equipment performs as described below:

   a) Lighting Systems installed by the ESCO: The lighting systems being replaced perform properly when new components with efficiencies at or greater than those in Exhibit 1 are installed.

   b) Boiler System: The boiler system performs properly if boiler combustion efficiency is equal to or greater than 90% combustion efficiency.

   c) Control System: The control system performs properly when equipment is able to be scheduled on and off, and when the systems properly modulate the outdoor air economizer.

   d) Water Systems installed by the ESCO: The water systems being replaced perform properly when new components with efficiencies at or greater than those in Exhibit 1 are installed.

2. The Owner and the ESCO agree that the energy savings will be reduced at the rates listed below when the ESCO installed equipment is not performing as a result of the sole failure of the ESCO installed equipment. The Owner agrees to notify the ESCO by telephone within 2 working days of detecting any non-performing ESCO installed equipment, with a follow-up in writing within three business days. Should the ESCO installed equipment not perform in accordance with this Section, the Energy Cost Savings will be reduced by:

   a) HVAC & Controls: $0.00085 per square foot per failed area per week.

   b) Lighting: $0.00209 per square foot per failed area per week.

   c) Water: $0.00116 per square foot per failed area per week.

3. The ESCO shall have two weeks from notification to repair the ESCO equipment without reduction of savings.

4. Modifications to Baseline by Owner: The Owner shall maintain all existing facilities and installed equipment during the term of this contract at or above current maintenance levels. Owner agrees to maintain the energy efficiency of the systems installed.

X. FINANCING

Project financing will be provided by the Owner.

XI. ENERGY SAVINGS GUARANTEE

1. The ESCO guarantees that the equipment will perform as indicated in Section IX - Method of Calculating Energy Savings and Energy Cost Savings. This performance level is guaranteed for one year following the notice of commencement of savings (defined as Years 1). Based on this performance, and as indicated in Exhibit 1, the electrical energy savings will not be less than 661,473 kilowatt-hours per year, and cumulative 1,744 kW per year; gas savings will be not less than 9,225 Therms per year, and water savings will not be less than 1,590 CCF per year. This amount is ninety percent (90%) of the estimated first year savings.

2. In the event that the guaranteed performance in year one, pursuant to Section IX Method of Calculating Energy Savings and Energy Cost Savings, is less than the guaranteed minimum, the ESCO shall pay the Owner the difference between the actual cost savings and the guaranteed amount.

XII. ESCO COMPENSATION

A. PAYMENTS

1. Owner agrees to make progress payments based on completion of each ECM as listed in Section II., and one subsequent payment for retention.

2. Retention will be released within 30 days after receipt of all lien releases, L&I, Revenue and Employment Security certificates and releases by Owner.

B. TAX INCENTIVES

1. Owner agrees to relinquish any and all tax credits and deductions associated with the project scope to the ESCO. This includes any tax deductions associated with the Federal Energy Policy Act of 2005. Upon determination of the value of these credits or deductions, the ESCO will credit a portion of these tax benefits back to the Owner.

XIII. TERM OF AGREEMENT

Subject to the following sentence, the term of this Contract shall be two years; measured beginning with the Notification of Commencement of Energy Savings. Nonetheless, the Contract shall be effective and binding upon the parties immediately upon its execution, and the period from contract execution until the Commencement Date shall be known as the "Interim Period". All energy savings achieved during the interim period will be fully credited to Customer, and may be used to offset any loss of energy savings; as mutually agreed to by the Owner and the ESCO.

XIV. TERMINATION VALUE

1. Upon commencement of energy savings, Owner may at any time terminate this Agreement.
2. Any termination shall fully and finally terminate and extinguish all of the Owner's rights and all of the ESCO's obligations under this agreement.

XV. PROJECT SCHEDULE

The ESCO will complete design work within four months of Notice to Proceed, and construction work will be substantially completed within nine months of design acceptance. Final completion will be within ten months of design acceptance.

XVI. EXTENT OF SUBCONTRACTING

1. The ESCO may subcontract the energy audit, design, construction management, start-up and training portions of this Contract to qualified firms at its sole discretion. Construction subcontracts will be awarded competitively.
2. The ESCO will endeavor to satisfy the MWBE goals of Washington State. The ESCO will not be required to meet these goals if the project budget is exceeded and cost effectiveness is impaired.

XVII. INSURANCE AND BONDING

1. The ESCO shall provide a payment and performance bond in accordance with Exhibit 3. Builders Risk Insurance will also be provided by the ESCO.

2. For the purposes of this Agreement, the "Sum Amount Of Bond" shall be $919,792. This amount does not include any construction contingencies.

   (1) The bond amount consists of the following:

   Labor and Material and Bond Cost $852,449

   Sales Tax $67,343

   Bond Total $919,792

   (2) Certificates of General Liability Insurance will be provided prior to Contract Signing. The State Of Washington shall be named as An Additional Insured on all insurance certificates.

3. The ESCO shall provide a payment and performance bond in the amount of 100% of the construction cost, as defined in the Energy Services Agreement Addendum. The amount shall include all authorized changes and state sales tax. The Bond shall be in the form attached to the Conditions of the Energy Services Agreement. The Contract listed on the bond form shall be the Addendum No. and Agreement No. which incorporates the work and the “Contract Date” shall be the date of the Addendum. The full and just sum of the Bond shall be as defined above and shall include the actual cost of purchasing and installing the ESCO Equipment, job superintendent and state sales tax. The Bond shall specifically exclude coverage for those portions of the Energy Services Agreement and/or Energy Services Agreement Addendum pertaining to design services, energy cost savings guarantee, maintenance guarantee, utility incentives, efficiency guarantees, and any other clauses which do not relate specifically to construction management and supervision of work for purchasing and installing of the ESCO Equipment, or for work to be accomplished by the Owner. The Bond shall be with a Surety or Bonding Company that is registered with the State of Washington Insurance Commissioner's Office.

XVIII. RENEGOTIATION

Both parties recognize that during the project implementation, the Owner and the ESCO may mutually agree to various modifications and that the energy savings may change as a result. Further, local code officials may require unanticipated changes to the project scope. In either event, both parties shall negotiate in good faith to restructure the project to maintain the intent of this Agreement.

XIX. EXHIBITS AND TABLES

Please see attached exhibits & tables

TABLE 1
Financial Analysis (Years 1 through 7)

I. PROJECT COSTS & ENERGY SAVINGS

PROJECT COSTS

	Mechanical and Water	Lighting	Total Project costs	Values - Services	Values - Construction	Values - Contingency
Engineering Audit	$ 20,543	$ -	$ 20,543	$ 20,543		
Estimated Labor and Material Cost	$ 568,708	$ 270,316	$ 839,024		$ 839,024	
Design @ 10.0% of Labor & Material	$ 56,871	$ -	$ 56,871	$ 56,871		
Design @ 4.0% of Labor & Material'	$ -	$ 10,813	$ 10,813	$ 10,813		
Construction Mgt @ 5.0% of Labor & Material	$ 28,435	$ 13,516	$ 41,951	$ 41,951		
Bonding @ 1.6% of Labor & Material	$ 9,099	$ 4,325	$ 13,424		$ 13,424	
ESCO overhead and profit @ 15.0% of Labor & Material	$ 85,306	$ 40,547	$ 125,854	$ 125,854		
Subtotal:	$ 768,963	$ 339,517	$ 1,108,480	$ 256,031	$ 852,449	
Construction contingency @ 5.0% of CC	$ 28,435	$ 13,516	$ 41,951			$ 41,951
Subtotal - Maximum Project Cost:	$ 797,399	$ 353,033	$ 1,150,431	**$ 256,031**	**$ 852,449**	**$ 41,951**
Est. Sales Tax @ 7.9% of Maximum Project Cost	$ 62,994	$ 27,890	$ 90,884	$ 20,226	$ 67,343	$ 3,314
E&AS Project Management Fees	$ -	$ -	$ 47,800			
TOTAL PROJECT PRICE:	$ 860,393	$ 380,923	$ 1,289,116	$ 276,258	$ 919,792	$ 45,265
Estimated Utility Incentive			$ -			
Estimated Client Net Cost			$ 1,289,116			
Client initial cash payment			$ 100,000			
Amount of OSPI Grant Request			$ 500,000			
Amount to be financed by client:			**$ 689,116**			
Year 2 Cash Flow:			**$ 1,534**			

ECONOMIC ASSUMPTIONS

Interest Rate :	4.50%	**Amount of grant request:**	**$ 500,000**
Financing Term:	10 years	**Leveraging ratio:**	**1.58**
Payments/year	2	**Simple payback:**	**16.15 years**
Inflation Rate:	3.50%	**Cost of energy saved:**	**$ 365 per million Btu's**
Est Annual Rate of Energy Increases:	1.50%		
Client Discount Rate	4.50%		
Client initial cash payment	0.00%		

ANNUAL ENERGY SAVINGS

Unit Price	Lighting	HVAC	Water & Sewer	Total	Annual $	Utility Costs
Large General Service - Electrical Savings (kWh and $)	617,827	92,679	24,464	734,970	$ 37,263	$0.0507/kW-hr
Large General Service - Electrical Savings (kW and $)	1,938	-	-	1,938	$ 8,080	$4.170/kW
PSE Rate Schedule 31G-C - Gas Savings (Therms)	(309)	586	129	406	$ 477	$1.1740/Therm
PSE Rate Schedule 41G-C2 - Gas Savings (Therms)	(315)	9,602	557	9,844	$ 8,953	$0.9095/Therm
Inside City Limits - Water Savings (CCF)	-	-	989	989	$ 11,492	$11.6200/CCF
Outside City Limits - Water Savings (CCF)	-	-	777	777	$ 13,548	$17.4300/CCF
	$ 38,755	$ 14,120	$ 26,938	$ 79,813	$ 79,813	

Project Name: Centralia School District

II. PROJECT CASH FLOW

Year ending	2009	2010	2011	2012	2013	2014	2015	2016
Reference year	0	1	2	3	4	5	6	7
PROJECT SAVINGS								
Lighting Energy Savings	$ -	$ 38,755	$ 39,336	$ 39,926	$ 40,525	$ 41,133	$ 41,750	$ 42,376
HVAC & Water Savings	$ -	$ 41,058	$ 41,673	$ 42,299	$ 42,933	$ 43,577	$ 44,231	$ 44,894
Lighting Maint. Savings:	$ -	$ 6,859	$ 6,859	$ 6,859	$ 6,859	$ 6,379	$ 5,754	$ 4,576
HVAC Maint. Savings :	$ -	$ -	$ -	$ -	$ -	$ -	$ -	$ -
Other Savings :	$ -							
Total Savings:	**$ -**	$ 86,672	$ 87,869	$ 89,084	$ 90,317	$ 91,089	$ 91,735	$ 91,847
ANNUAL PROJECT COSTS								
Amount Financed	$ (689,116)							
Cash Payment	$ (100,000)							
Annual Financing Costs		$ (86,335)	$ (86,335)	$ (86,335)	$ (86,335)	$ (86,335)	$ (86,335)	$ (86,335)
Quantum Technical Support and Monitoring					$ -	$ -	$ -	$ -
E&AS Technical Support & Monitoring			$ -	$ -	$ -	$ -	$ -	$ -
Total Annual Costs to Client	$ (100,000)	$ (86,335)	$ (86,335)	$ (86,335)	$ (86,335)	$ (86,335)	$ (86,335)	$ (86,335)
NET ANNUAL CASH FLOW WHEN FINANCING PROJECT:								
Based on savings from Utility & Maint. Equip. Costs		**$ 336**	**$ 1,534**	**$ 2,749**	**$ 3,982**	**$ 4,754**	**$ 5,399**	**$ 5,512**

Financial Analysis (Years 8 through 15)

II. PROJECT CASH FLOW								
	Year							
Year ending	2017	2018	2019	2020	2021	2022	2023	2024
Reference year	8	9	10	11	12	13	14	15
PROJECT SAVINGS								
Lighting Energy Savings	$ 43,012	$ 43,657	$ 44,312	$ 44,977	$ 45,651	$ 46,336	$ 47,031	$ 47,737
HVAC & Water Savings	$ 45,568	$ 46,251	$ 46,945	$ 47,649	$ 48,364	$ 49,089	$ 49,826	$ 50,573
Lighting Maint. Savings:	$ 4,576	$ 2,210	$ 2,210	$ -	$ -	$ -	$ -	$ -
HVAC Maint. Savings :	$ -	$ -	$ -	$ -	$ -	$ -	$ -	$ -
Other Savings :								
Total Savings:	$ 93,156	$ 92,119	$ 93,467	$ 92,626	$ 94,015	$ 95,425	$ 96,857	$ 98,310
ANNUAL PROJECT COSTS								
Amount Financed								
Cash Payment								
Annual Financing Costs	$ (86,335)	$ (86,335)	$ (86,335)	$ -	$ -	$ -	$ -	$ -
Quantum Technical Support and Monitoring	$ -	$ -	$ -	$ -	$ -	$ -	$ -	$ -
E&AS Technical Support & Monitoring	$ -	$ -	$ -	$ -	$ -	$ -	$ -	$ -
Total Annual Costs to Client	$ (86,335)	$ (86,335)	$ (86,335)	$ -	$ -	$ -	$ -	$ -
NET ANNUAL CASH FLOW WHEN FINANCING PROJECT:								
Based on savings from Utility & Maint. Equip. Costs	**$ 6,821**	**$ 5,783**	**$ 7,132**	**$ 92,626**	**$ 94,015**	**$ 95,425**	**$ 96,857**	**$ 98,310**

TABLE 2-1 Full List of Measures

ECM #	Conservation Measure	Baseline Energy & Water Use and Costs: Current Annual Use - Electrical Consume kWh	Current Annual Use - Electrical Demand kW	Current Gas Use (Therms)	Current Water Use (CCF)	Current Electric Cost $	Current Gas Cost $	Current Water Cost $	Current Total Cost $	Proposed Energy & Water Use and Costs: Future Total Annual Use - Electric Consume kWh	Future Total Annual Use - Electric Demand kW	Future Gas Use (Therms)	Future Water Use (CCF)	Future Electric Cost $	Future Gas Cost $	Future Water Cost $	Future Total Cost $	Proposed Savings: Annual Savings Electric Consume kWh	Annual Savings Electric Demand kW	Annual Gas Savings (Therms)	Annual Water Savings (CCF)	Annual Resource Savings $	Annual Maint. Savings $	Initial Labor/Mat'l Cost $	Estimated Utility Incentive $	Final Labor/Mat'l Cost $	Simple Payback Years
Centralia High School (CHS)																											
	Mechanical Conservation Measures																										
ECM-CHS-M1a	Replace Electric Resistance Air Handling Units (Gas Fired) - This measure will replace the existing electric heated multi-zone air handling units with new gas fired multi-zone air handling units.	1,254,500	2,007	-	-	$ 71,970	$ -	$ -	$ 71,970	-	-	50,372	-	$ -	$ 59,137	$ -	$ 59,137	1,254,500	2,007	(50,372)	-	$ 12,833	$ -	$ 2,317,500	$ -	$ 2,317,500	N/A
ECM-CHS-M1b	Replace Electric Resistance Air Handling Units (HW Boiler) - This measure will replace the existing electric heated multi-zone air handling units with new hot water heated multi-zone air handling units. New boilers will be installed to provide hot water to the air handling units.	1,254,500	2,007	-	-	$ 71,970	$ -	$ -	$ 71,970	-	-	47,573	-	$ -	$ 55,852	$ -	$ 55,852	1,254,500	2,007	(47,573)	-	$ 16,119	$ -	$ 2,410,200	$ -	$ 2,410,200	N/A
ECM-CHS-M2	Upgrade existing DDC energy management system (EMS) - This measure will implement "Demand Ventilation Control" using CO2 sensors and "occupied stand-by" control using occupancy sensors for areas of sporadic occupancy.	There are no Savings Associated with this Measure								There are no Savings Associated with this Measure								There are no Savings Associated with this Measure						$ 226,600	$ -	$ 226,600	#DIV/0!
ECM-CHS-M3	Retro-commissioning of the existing controls system - This measure will verify that the existing control sequences are operating as intended; including but not limited to runtime schedules, economizer operation, morning warm-up and night setback sequences.	1,254,500	2,007	-	-	$ 71,970	$ -	$ -	$ 71,970	1,216,865	2,007	-	-	$ 70,062	$ -	$ -	$ 70,062	37,635	-	-	-	$ 1,908	$ -	$ 21,012	$ -	$ 21,012	11.01
	Lighting Conservation Measures																										
ECM-CHS-L1	Lighting Retrofit/Replacement (High School) - This measure will retrofit or replace any remaining T-12, magnetic ballast or incandescent fixtures with T-8, electronic ballast and compact fluorescent technology.	340,810	939	-	-	$ 21,193	$ -	$ -	$ 21,193	181,003	485	-	-	$ 11,201	$ -	$ -	$ 11,201	159,807	453	-	-	$ 9,993	$ -	$ 77,612	$ -	$ 77,612	7.77
ECM-CHS-L2	Lighting Retrofit/Replacement (Stadium and Grand Stands) - This measure will retrofit or replace any remaining T-12, magnetic ballast or incandescent fixtures with T-8, electronic ballast and compact fluorescent technology in the Grand Stands. This measure will also investigate retrofit alternatives for the Stadium and Grand Stand HID lighting.	52,515	189	-	-	$ 3,450	$ -	$ -	$ 3,450	27,097	119	-	-	$ 1,870	$ -	$ -	$ 1,870	25,418	70	-	-	$ 1,580	$ -	$ 13,920	$ -	$ 13,920	8.81
	Water Conservation Measures																										
ECM-CHS-W1	Water Retrofit/Replacement - This measure will investigate water and sewer savings opportunities by installing low consumption fixture or devices.	17,554	-	-	647	$ 890	$ -	$ 11,280	$ 12,170	3,989	-	-	279	$ 202	$ -	$ 4,865	$ 5,068	13,564	-	-	368	$ 7,102	$ -	$ 16,316	$ -	$ 16,316	2.30
Centralia Middle School (CMS)																											
	Mechanical Conservation Measures																										
ECM-CMS-M1	Replace Boilers - This measure will replace the existing Raypack boilers with new high efficiency condensing boilers	-	-	22,865	-	$ -	$ 20,796	$ -	$ 20,796	-	-	20,833	-	$ -	$ 18,948	$ -	$ 18,948	-	-	2,032	-	$ 1,849	$ -	$ 127,067	$ -	$ 127,067	68.74
ECM-CMS-M2	Pump Consolidation and VFD's - This measure will remove the existing zone pumps and install a single pump with zone control valves and VFD.	93,547	141	-	-	$ 5,329	$ -	$ -	$ 5,329	5,556	59	-	-	$ 528	$ -	$ -	$ 528	87,990	81	-	-	$ 4,801	$ -	$ 62,871	$ -	$ 62,871	13.10
ECM-CMS-M3	Upgrade existing DDC energy management system (EMS) - This measure will implement "Demand Ventilation Control" using CO2 sensors and "occupied stand-by" control using occupancy sensors for areas of sporadic occupancy. This measure will also two failing control zone supervisors.	70,405	95	11,553	-	$ 3,965	$ 10,507	$ -	$ 14,472	30,292	95	5,874	-	$ 1,932	$ 5,342	$ -	$ 7,274	40,113	-	5,679	-	$ 7,198	$ -	$ 68,701	$ -	$ 68,701	9.54
ECM-CMS-M4	Retro-commissioning of the existing controls system - This measure will verify that the existing control sequences are operating as intended; including but not limited to runtime schedules, economizer operation, morning warm-up and night setback sequences.	70,405	95	11,553	-	$ 3,965	$ 10,507	$ -	$ 14,472	31,376	95	6,958	-	$ 1,986	$ 6,328	$ -	$ 8,315	39,029	-	4,595	-	$ 6,158	$ -	$ 14,008	$ -	$ 14,008	2.27
	Water Conservation Measures																										
ECM-CMS-W1	Water Retrofit/Replacement - This measure will investigate water and sewer savings opportunities by installing low consumption fixture or devices.	-	-	614	654	$ -	$ 558	$ 11,392	$ 11,950	-	-	139	244	$ -	$ 127	$ 4,258	$ 4,385	-	-	474	409	$ 7,565	$ -	$ 27,925	$ -	$ 27,925	3.69

		Baseline Energy & Water Use and Costs								*Proposed Energy & Water Use and Costs*								*Proposed Savings*									
ECM #	Conservation Measure	*Current Annual Use - Electrical*		*Current Gas Use*	*Current Water Use*	*Current Electric Cost*	*Current Gas Cost*	*Current Water Cost*	*Current Total Cost*	*Future Total Annual Use - Electric*		*Future Gas Use*	*Future Water Use*	*Future Electric Cost*	*Future Gas Cost*	*Future Water Cost*	*Future Total Cost*	*Annual Savings Electric*		*Annual Gas Savings*	*Annual Water Savings*	*Annual Resource Savings*	*Annual Maint. Savings*	Initial Labor/Mat'l Cost	Estimated Utility Incentive	Final Labor/Mat'l Cost	Simple Payback
		Consume kWh	Demand kW	(Therms)	(CCF)	$	$	$	$	Consume kWh	Demand kW	(Therms)	(CCF)	$	$	$	$	Consume kWh	Demand kW	(Therms)	(CCF)	$	$	$	$	$	Years
Edison Elementary School (EES)																											
	Mechanical Conservation Measures																										
ECM-EES-M1	Replace Boilers - This measure will replace the Cleaver Brooks steam boiler with new high efficiency condensing hot water boilers	-	-	15,497	-	$ -	$ 14,095	$ -	$ 14,095	-	-	14,120	-	$ -	$ 12,842	$ -	$ 12,842	-	-	1,378	-	$ 1,253	$ -	$ 86,052	$ -	$ 86,052	68.68
ECM-EES-M2	Upgrade existing Pneumatic Control System - This measure will upgrade the existing Pneumatic Control system to Full DDC and implement "Demand Ventilation Control" using CO2 sensors and "occupied stand-by" control using occupancy sensors for the Multi-purpose Room.	166,459	1,136	14,608	-	$ 13,179	$ 13,286	$ -	$ 26,464	161,176	1,136	14,094	-	$ 12,911	$ 12,819	$ -	$ 25,729	5,284	-	514	-	$ 735	$ -	$ 73,336	$ -	$ 73,336	99.77
ECM-EES-M3	Retro-commissioning of the existing controls system - This measure will verify that the existing control sequences are operating as intended; including but not limited to runtime schedules, economizer operation, morning warm-up and night setback sequences.	163,387	1,124	14,120	-	$ 12,971	$ 12,842	$ -	$ 25,813	158,485	1,124	13,696	-	$ 12,723	$ 12,457	$ -	$ 25,179	4,902	-	424	-	$ 634	$ -	$ 7,004	$ -	$ 7,004	11.05
	Lighting Conservation Measures																										
ECM-EES-L1	Lighting Retrofit/Replacement - This measure will retrofit or replace any remaining T-12, magnetic ballast or incandescent fixtures with T-8, electronic ballast and compact fluorescent technology.	179,453	587	-	-	$ 11,547	$ -	$ -	$ 11,547	74,898	246	315	-	$ 4,824	$ 287	$ -	$ 5,110	104,555	341	(315)	-	$ 6,436	$ -	$ 45,061	$ -	$ 45,061	7.00
	Water Conservation Measures																										
ECM-EES-W1	Water Retrofit/Replacement - This measure will investigate water and sewer savings opportunities by installing low consumption fixture or devices.	-	-	107	285	$ -	$ 97	$ 3,313	$ 3,410	-	-	24	112	$ -	$ 22	$ 1,296	$ 1,318	-	-	83	174	$ 2,092	$ -	$ 18,148	$ -	$ 18,148	8.68
Jefferson Lincoln Elementary School (JLES)																											
	Mechanical Conservation Measures																										
ECM-JLES-M1	Replace Boilers - This measure will replace the Cleaver Brooks hot water boiler with new high efficiency condensing hot water boilers	-	-	5,039	-	$ -	$ 5,916	$ -	$ 5,916	-	-	4,591	-	$ -	$ 5,390	$ -	$ 5,390	-	-	448	-	$ 526	$ -	$ 67,753	$ -	$ 67,753	128.85
ECM-JLES-M2	Upgrade existing Pneumatic Control System - This measure will upgrade the existing Pneumatic Control system to Full DDC and implement "Demand Ventilation Control" using CO2 sensors and "occupied stand-by" control using occupancy sensors for the Multi-purpose Room.	323,283	1,976	5,661	-	$ 24,629	$ 6,646	$ -	$ 31,275	313,635	1,976	4,939	-	$ 24,140	$ 5,799	$ -	$ 29,938	9,647	-	722	-	$ 1,336	$ -	$ 77,250	$ -	$ 77,250	57.81
ECM-JLES-M3	Retro-commissioning of the existing controls system - This measure will verify that the existing control sequences are operating as intended; including but not limited to runtime schedules, economizer operation, morning warm-up and night setback sequences.	321,582	1,966	4,591	-	$ 24,502	$ 5,390	$ -	$ 29,892	311,934	1,966	4,453	-	$ 24,013	$ 5,228	$ -	$ 29,241	9,647	-	138	-	$ 651	$ -	$ 7,004	$ -	$ 7,004	10.76
	Lighting Conservation Measures																										
ECM-JLES-L1	Lighting Retrofit/Replacement - This measure will retrofit or replace any remaining T-12, magnetic ballast or incandescent fixtures with T-8, electronic ballast and compact fluorescent technology.	172,884	540	-	-	$ 11,016	$ -	$ -	$ 11,016	68,017	233	309	-	$ 4,421	$ 362	$ -	$ 4,783	104,866	307	(309)	-	$ 6,233		$ 39,613	$ -	$ 39,613	6.36
	Water Conservation Measures																										
ECM-JLES-W1	Water Retrofit/Replacement - This measure will investigate water and sewer savings opportunities by installing low consumption fixture or devices.	-	-	167	439	$ -	$ 196	$ 5,103	$ 5,299	-	-	38	172	$ -	$ 44	$ 1,999	$ 2,043	-	-	129	267	$ 3,256	$ -	$ 17,925	$ -	$ 17,925	5.51
Fords Prairie Elementary School (FPES)																											
	Lighting Conservation Measures																										
ECM-FPES-L1	Lighting Retrofit/Replacement - This measure will retrofit or replace any remaining T-12, magnetic ballast or incandescent fixtures with T-8, electronic ballast and compact fluorescent technology.	170,484	576	-	-	$ 11,047	$ -	$ -	$ 11,047	76,441	250	-	-	$ 4,916	$ -	$ -	$ 4,916	94,043	327	-	-	$ 6,131	$ -	$ 37,907	$ -	$ 37,907	6.18
	Water Conservation Measures																										
ECM-FPES-W1	Water Retrofit/Replacement - This measure will investigate water and sewer savings opportunities by installing low consumption fixture or devices.	4,937	-	-	410	$ 250	$ -	$ 4,762	$ 5,012	1,122	-	-	172	$ 57	$ -	$ 1,994	$ 2,051	3,815	-	-	238	$ 2,961	$ -	$ 15,789	$ -	$ 15,789	5.33
Oakview Elementary School (OES)																											
	Lighting Conservation Measures																										
ECM-OES-L1	Lighting Retrofit/Replacement - This measure will retrofit or replace any remaining T-12, magnetic ballast or incandescent fixtures with T-8, electronic ballast and compact fluorescent technology.	109,904	358	-	-	$ 7,065	$ -	$ -	$ 7,065	50,852	166	-	-	$ 3,269	$ -	$ -	$ 3,269	59,052	192	-	-	$ 3,796	$ -	$ 25,999	$ -	$ 25,999	6.85
	Water Conservation Measures																										
ECM-OES-W1	Water Retrofit/Replacement - This measure will investigate water and sewer savings opportunities by installing low consumption fixture or devices.	4,232	-	-	196	$ 215	$ -	$ 2,281	$ 2,495	962	-	-	76	$ 49	$ -	$ 879	$ 928	3,270	-	-	121	$ 1,567	$ -	$ 8,099	$ -	$ 8,099	5.17

		Baseline Energy & Water Use and Costs								*Proposed Energy & Water Use and Costs*								*Proposed Savings*									
ECM #	Conservation Measure	*Current Annual Use - Electrical*		*Current Gas Use*	*Current Water Use*	*Current Electric Cost*	*Current Gas Cost*	*Current Water Cost*	*Current Total Cost*	*Future Total Annual Use - Electric*		*Future Gas Use*	*Future Water Use*	*Future Electric Cost*	*Future Gas Cost*	*Future Water Cost*	*Future Total Cost*	*Annual Savings Electric*		*Annual Gas Savings*	*Annual Water Savings*	*Annual Resource Savings*	*Annual Maint. Savings*	*Initial Labor/Mat'l Cost*	*Estimated Utility Incentive*	*Final Labor/Mat'l Cost*	*Simple Payback*
		Consume kWh	Demand kW	(Therms)	(CCF)	$	$	$	$	Consume kWh	Demand kW	(Therms)	(CCF)	$	$	$	$	Consume kWh	Demand kW	(Therms)	(CCF)	$	$	$	$	$	Years
Washington Elementary School (WES)																											
	Lighting Conservation Measures																										
ECM-WES-L1	Lighting Retrofit/Replacement - This measure will retrofit or replace any remaining T-12, magnetic ballast or incandescent fixtures with T-8, electronic ballast and compact fluorescent technology.	180,795	633	-	-	$ 11,805	$ -	$ -	$ 11,805	85,292	315	-	-	$ 5,639	$ -	$ -	$ 5,639	95,503	317	-	-	$ 6,166	$ -	$ 44,124	$ -	$ 44,124	7.16
	Water Conservation Measures																										
ECM-WES-W1	Water Retrofit/Replacement - This measure will investigate water and sewer savings opportunities by installing low consumption fixture or devices.	4,937	-	-	328	$ 250	$ -	$ 3,811	$ 4,061	1,122	-	-	138	$ 57	$ -	$ 1,609	$ 1,665	3,815	-	-	190	$ 2,396	$ -	$ 13,581	$ -	$ 13,581	5.67
Administration Office (AO)																											
	Lighting Conservation Measures																										
ECM-AO-L1	Lighting Retrofit/Replacement - This measure will retrofit or replace any remaining T-12, magnetic ballast or incandescent fixtures with T-8, electronic ballast and compact fluorescent technology.	23,828	88	-	-	$ 1,573	$ -	$ -	$ 1,573	11,251	39	-	-	$ 732	$ -	$ -	$ 732	12,577	49	-	-	$ 841	$ -	$ 6,243	$ -	$ 6,243	7.42
	Water Conservation Measures																										
ECM-AO-W1	Water Retrofit/Replacement - This measure will investigate water and sewer savings opportunities by installing low consumption fixture or devices.	522	-	-	45	$ 26	$ -	$ 791	$ 818	119	-	-	17	$ 6	$ -	$ 290	$ 296	404	-	-	29	$ 522	$ -	$ 3,187	$ -	$ 3,187	6.11
Maintenance Facility (MF)																											
	Lighting Conservation Measures																										
ECM-MF-L1	Lighting Retrofit/Replacement - This measure will retrofit or replace any remaining T-12, magnetic ballast or incandescent fixtures with T-8, electronic ballast and compact fluorescent technology.	36,415	117	-	-	$ 2,333	$ -	$ -	$ 2,333	15,250	46	45	-	$ 966	$ 41	$ -	$ 1,007	21,165	71	(45)	-	$ 1,327	$ -	$ 10,948	$ -	$ 10,948	8.25
	Water Conservation Measures																										
ECM-MF-W1	Water Retrofit/Replacement - This measure will investigate water and sewer savings opportunities by installing low consumption fixture or devices.	-	-	10	23	$ -	$ 10	$ 264	$ 273	-	-	8	8	$ -	$ 7	$ 93	$ 101	-	-	2	15	$ 173	$ -	$ 1,593	$ -	$ 1,593	9.22

TABLE 2-2 Selected Measures

		Baseline Energy & Water Use and Costs								*Proposed Energy & Water Use and Costs*								*Proposed Savings*									
ECM #	**Conservation Measure**	*Current Annual Use - Electrical*		*Current Gas Use*	*Current Water Use*	*Current Electric Cost*	*Current Gas Cost*	*Current Water Cost*	*Current Total Cost*	*Future Total Annual Use - Electric*		*Future Gas Use*	*Future Water Use*	*Future Electric Cost*	*Future Gas Cost*	*Future Water Cost*	*Future Total Cost*	*Annual Savings Electric*		*Annual Gas Savings*	*Annual Water Savings*	*Annual Resource Savings*	*Annual Maint. Savings*	**Initial Labor/Mat'l Cost**	**Estimated Utility Incentive**	**Final Labor/Mat'l Cost**	**Simple Payback**
		Consume kWh	Demand kW	(Therms)	(CCF)	$	$	$	$	Consume kWh	Demand kW	(Therms)	(CCF)	$	$	$	$	Consume kWh	Demand kW	(Therms)	(CCF)	$	$	$	$	$	Years
Centralia High School (CHS)																											
	Mechanical Conservation Measures																										
ECM-CHS-M3	Retro-commissioning of the existing controls system - This measure will verify that the existing control sequences are operating as intended; including but not limited to runtime schedules, economizer operation, morning warm-up and night setback sequences.	1,254,500	2,007	-	-	$ 71,970	$ -	$ -	$ 71,970	1,216,865	2,007	-	-	$ 70,062	$ -	$ -	$ 70,062	37,635	-	-	-	$ 1,908	$ -	$ 21,012	$ -	$ 21,012	11.01
	Lighting Conservation Measures																										
ECM-CHS-L1	Lighting Retrofit/Replacement (High School) - This measure will retrofit or replace any remaining T-12, magnetic ballast or incandescent fixtures with T-8, electronic ballast and compact fluorescent technology.	340,810	939	-	-	$ 21,193	$ -	$ -	$ 21,193	181,003	485	-	-	$ 11,201	$ -	$ -	$ 11,201	159,807	453	-	-	$ 9,993	$ -	$ 77,612	$ -	$ 77,612	7.77
	Water Conservation Measures																										
ECM-CHS-W1	Water Retrofit/Replacement - This measure will investigate water and sewer savings opportunities by installing low consumption fixture or devices.	17,554	-	-	647	$ 890	$ -	$ 11,280	$ 12,170	3,989	-	-	279	$ 202	$ -	$ 4,865	$ 5,068	13,564	-	-	368	$ 7,102	$ -	$ 16,316	$ -	$ 16,316	2.30
Centralia Middle School (CMS)																											
	Mechanical Conservation Measures																										
ECM-CMS-M1	Replace Boilers - This measure will replace the existing Raypack boilers with new high efficiency condensing boilers	-	-	22,865	-	$ -	$ 20,796	$ -	$ 20,796	-	-	20,833	-	$ -	$ 18,948	$ -	$ 18,948	-	-	2,032	-	$ 1,849	$ -	$ 127,067	$ -	$ 127,067	68.74
ECM-CMS-M3	Upgrade existing DDC energy management system (EMS) - This measure will implement "Demand Ventilation Control" using CO2 sensors and "occupied stand-by" control using occupancy sensors for areas of sporadic occupancy. This measure will also two failing control zone supervisors.	70,405	95	11,553	-	$ 3,965	$ 10,507	$ -	$ 14,472	30,292	95	5,874	-	$ 1,932	$ 5,342	$ -	$ 7,274	40,113	-	5,679	-	$ 7,198	$ -	$ 68,701	$ -	$ 68,701	9.54
	Water Conservation Measures																										
ECM-CMS-W1	Water Retrofit/Replacement - This measure will investigate water and sewer savings opportunities by installing low consumption fixture or devices.	-	-	614	654	$ -	$ 558	$ 11,392	$ 11,950	-	-	139	244	$ -	$ 127	$ 4,258	$ 4,385	-	-	474	409	$ 7,565	$ -	$ 27,925	$ -	$ 27,925	3.69
Edison Elementary School (EES)																											
	Mechanical Conservation Measures																										
ECM-EES-M1	Replace Boilers - This measure will replace the Cleaver Brooks steam boiler with new high efficiency condensing hot water boilers	-	-	15,497	-	$ -	$ 14,095	$ -	$ 14,095	-	-	14,120	-	$ -	$ 12,842	$ -	$ 12,842	-	-	1,378	-	$ 1,253	$ -	$ 86,052	$ -	$ 86,052	68.68
ECM-EES-M2	Upgrade existing Pneumatic Control System - This measure will upgrade the existing Pneumatic Control system to Full DDC and implement "Demand Ventilation Control" using CO2 sensors and "occupied stand-by" control using occupancy sensors for the Multi-purpose Room.	166,459	1,136	14,608	-	$ 13,179	$ 13,286	$ -	$ 26,464	161,176	1,136	14,094	-	$ 12,911	$ 12,819	$ -	$ 25,729	5,284	-	514	-	$ 735	$ -	$ 73,336	$ -	$ 73,336	99.77
	Lighting Conservation Measures																										
ECM-EES-L1	Lighting Retrofit/Replacement - This measure will retrofit or replace any remaining T-12, magnetic ballast or incandescent fixtures with T-8, electronic ballast and compact fluorescent technology.	179,453	587	-	-	$ 11,547	$ -	$ -	$ 11,547	74,898	246	315	-	$ 4,824	$ 287	$ -	$ 5,110	104,555	341	(315)	-	$ 6,436	$ -	$ 45,061	$ -	$ 45,061	7.00
	Water Conservation Measures																										
ECM-EES-W1	Water Retrofit/Replacement - This measure will investigate water and sewer savings opportunities by installing low consumption fixture or devices.	-	-	107	285	$ -	$ 97	$ 3,313	$ 3,410	-	-	24	112	$ -	$ 22	$ 1,296	$ 1,318	-	-	83	174	$ 2,092	$ -	$ 18,148	$ -	$ 18,148	8.68

		Baseline Energy & Water Use and Costs								*Proposed Energy & Water Use and Costs*								*Proposed Savings*									
ECM #	**Conservation Measure**	*Current Annual Use - Electrical*		*Current Gas Use*	*Current Water Use*	*Current Electric Cost*	*Current Gas Cost*	*Current Water Cost*	*Current Total Cost*	*Future Total Annual Use - Electric*		*Future Gas Use*	*Future Water Use*	*Future Electric Cost*	*Future Gas Cost*	*Future Water Cost*	*Future Total Cost*	*Annual Savings Electric*		*Annual Gas Savings*	*Annual Water Savings*	*Annual Resource Savings*	*Annual Maint. Savings*	**Initial Labor/Mat'l Cost**	**Estimated Utility Incentive**	**Final Labor/Mat'l Cost**	**Simple Payback**
		Consume kWh	**Demand kW**	**(Therms)**	**(CCF)**	**$**	**$**	**$**	**$**	**kWh**	**kW**	**(Therms)**	**(CCF)**	**$**	**$**	**$**	**$**	**kWh**	**kW**	**(Therms)**	**(CCF)**	**$**	**$**	**$**	**$**	**$**	***Years***
Jefferson Lincoln Elementary School (JLES)																											
	Mechanical Conservation Measures																										
ECM-JLES-M1	Replace Boilers - This measure will replace the Cleaver Brooks hot water boiler with new high efficiency condensing hot water boilers	-	-	5,039	-	$ -	$ 5,916	$ -	$ 5,916	-	-	4,591	-	$ -	$ 5,390	$ -	$ 5,390	-	-	448	-	$ 526	$ -	$ 67,753	$ -	$ 67,753	128.85
ECM-JLES-M3	Retro-commissioning of the existing controls system - This measure will verify that the existing control sequences are operating as intended; including but not limited to runtime schedules, economizer operation, morning warm-up and night setback sequences.	321,582	1,966	4,591	-	$ 24,502	$ 5,390	$ -	$ 29,892	311,934	1,966	4,453	-	$ 24,013	$ 5,228	$ -	$ 29,241	9,647	-	138	-	$ 651	$ -	$ 7,004	$ -	$ 7,004	10.76
	Lighting Conservation Measures																										
ECM-JLES-L1	Lighting Retrofit/Replacement - This measure will retrofit or replace any remaining T-12, magnetic ballast or incandescent fixtures with T-8, electronic ballast and compact fluorescent technology.	172,884	540	-	-	$ 11,016	$ -	$ -	$ 11,016	68,017	233	309	-	$ 4,421	$ 362	$ -	$ 4,783	104,866	307	(309)	-	$ 6,233	$ -	$ 39,613	$ -	$ 39,613	6.36
	Water Conservation Measures																										
ECM-JLES-W1	Water Retrofit/Replacement - This measure will investigate water and sewer savings opportunities by installing low consumption fixture or devices.	-	-	167	439	$ -	$ 196	$ 5,103	$ 5,299	-	-	38	172	$ -	$ 44	$ 1,999	$ 2,043	-	-	129	267	$ 3,256	$ -	$ 17,925	$ -	$ 17,925	5.51
Fords Prairie Elementary School (FPES)																											
	Lighting Conservation Measures																										
ECM-FPES-L1	Lighting Retrofit/Replacement - This measure will retrofit or replace any remaining T-12, magnetic ballast or incandescent fixtures with T-8, electronic ballast and compact fluorescent technology.	170,484	576	-	-	$ 11,047	$ -	$ -	$ 11,047	76,441	250	-	-	$ 4,916	$ -	$ -	$ 4,916	94,043	327	-	-	$ 6,131	$ -	$ 37,907	$ -	$ 37,907	6.18
	Water Conservation Measures																										
ECM-FPES-W1	Water Retrofit/Replacement - This measure will investigate water and sewer savings opportunities by installing low consumption fixture or devices.	4,937	-	-	410	$ 250	$ -	$ 4,762	$ 5,012	1,122	-	-	172	$ 57	$ -	$ 1,994	$ 2,051	3,815	-	-	238	$ 2,961	$ -	$ 15,789	$ -	$ 15,789	5.33
Oakview Elementary School (OES)																											
	Lighting Conservation Measures																										
ECM-OES-L1	Lighting Retrofit/Replacement - This measure will retrofit or replace any remaining T-12, magnetic ballast or incandescent fixtures with T-8, electronic ballast and compact fluorescent technology.	109,904	358	-	-	$ 7,065	$ -	$ -	$ 7,065	50,852	166	-	-	$ 3,269	$ -	$ -	$ 3,269	59,052	192	-	-	$ 3,796	$ -	$ 25,999	$ -	$ 25,999	6.85
	Water Conservation Measures																										
ECM-OES-W1	Water Retrofit/Replacement - This measure will investigate water and sewer savings opportunities by installing low consumption fixture or devices.	4,232	-	-	196	$ 215	$ -	$ 2,281	$ 2,495	962	-	-	76	$ 49	$ -	$ 879	$ 928	3,270	-	-	121	$ 1,567	$ -	$ 8,099	$ -	$ 8,099	5.17
Washington Elementary School (WES)																											
	Lighting Conservation Measures																										
ECM-WES-L1	Lighting Retrofit/Replacement - This measure will retrofit or replace any remaining T-12, magnetic ballast or incandescent fixtures with T-8, electronic ballast and compact fluorescent technology.	180,795	633	-	-	$ 11,805	$ -	$ -	$ 11,805	85,292	315	-	-	$ 5,639	$ -	$ -	$ 5,639	95,503	317	-	-	$ 6,166	$ -	$ 44,124	$ -	$ 44,124	7.16
	Water Conservation Measures																										
ECM-WES-W1	Water Retrofit/Replacement - This measure will investigate water and sewer savings opportunities by installing low consumption fixture or devices.	4,937	-	-	328	$ 250	$ -	$ 3,811	$ 4,061	1,122	-	-	138	$ 57	$ -	$ 1,609	$ 1,665	3,815	-	-	190	$ 2,396	$ -	$ 13,581	$ -	$ 13,581	5.67
	Totals																	**734,970**	**1,938**	**10,250**	**1,766**	**$ 79,813**	**$ -**	**$ 839,024**	**$ -**	**$ 839,024**	**10.51**

EXHIBIT 1

- **Detailed Energy Calculations (Provided Separately on CD-ROM)**
- **Detailed Lighting Spreadsheets (Provided Separately on CD-ROM)**
- **Detailed Water Audit Calculations (Provided Separately on CD-ROM)**

EXHIBIT 2

Bond Form

(Incorporated herein (AIA A312))

EXHIBIT 3

Energy Services Agreement
(Incorporated herein)

Measurement & Verification Report

Centralia School District

State Project Number: 2010-080 G (1-1)

For: Centralia School District
901 Johnson Road
Centralia, WA 98531

By: Ameresco Quantum, Inc.
222 Williams Avenue South, Suite 100
Renton, WA 98057
P: 206 522 4270 F: 425 687 3173 www.ameresco.com

Ameresco Quantum Project Number: 046-2009-01

January 10th, 2013

Table of Contents

I. EXECUTIVE SUMMARY 1

A. Introduction 1
B. Project Overview 1
C. Energy Savings Results 1
D. Conclusion 2

II. M&V PROCESS 2

A. International Performance Measurement and Verification Protocol (IPMVP) 2
B. M&V Agreement 3
C. Guarantee Method 3
D. Additional M&V 4

III. ECM DESCRIPTIONS 4

A. Lighting Measures 4
B. Water Measures 5
C. ECM-CHS-M3 6
D. ECM-CMS-M1 6
E. ECM-CMS-M3 6
F. ECM-EES-M1 8
G. ECM-EES-M2 8
H. ECM-JLES-M1 11
I. ECM-JLES-M3 12

IV. UTILITY BILL ANALYSIS 12

A. Baseline Period 12
B. Reporting Period 13
C. Consumption 13
D. Adjustments 14
E. Utility Rates 14
F. Utility Bill Analysis Results 15

V. CONCLUSION 16

VI. APPENDIX 18

A. Lighting As-builts 18
B. Water Measure Data Sheets 47
C. Boiler Efficiency Test Tapes 53
D. Utility Rates 56

List of Figures

Figure 1: CO_2 control at CMS gym 7
Figure 2: CO_2 levels for the CMS multipurpose room 7
Figure 3: EES AHU-1 fan start/stop..... 9
Figure 4: EES AHU-2 fan start/stop..... 9
Figure 5: EES AHU-3 fan start/stop..... 9
Figure 6: EES AHU-1 economizer functionality 10
Figure 7: EES AHU-2 economizer functionality 10
Figure 8: EES AHU-3 economizer functionality 11
Figure 9: Baseline and reporting period electricity consumption..... 15
Figure 10: Baseline and reporting period electricity demand..... 15
Figure 11: Baseline and reporting period natural gas consumption..... 16
Figure 12: Baseline and reporting period water consumption 16

List of Tables

Table 1: Summary of the energy guarantee and verified avoided energy use 1
Table 2: Change in avoided costs due to change in utility rates 2
Table 3: Comparison of proposed and as-built savings from lighting measures 5
Table 4: Total energy use by commodity at CHS for the baseline and reporting periods 13
Table 5: Total energy use by commodity at CMS for the baseline and reporting periods 13
Table 6: Total energy use by commodity at EES for the baseline and reporting periods 13
Table 7: Total energy use by commodity at JLES for the baseline and reporting periods 13
Table 8: Total energy use by commodity at FPES for the baseline and reporting periods 14
Table 9: Total energy use by commodity at OES for the baseline and reporting periods 14
Table 10: Total energy use by commodity at WES for the baseline and reporting periods..... 14
Table 11: Total energy use by commodity at all schools for the baseline and reporting periods 14
Table 12: Baseline and current utility rates 14
Table 13: Energy savings on the utility bills between the baseline and reporting periods..... 15

AMERESCO QUANTUM
Green • Clean • Sustainable

I. Executive Summary

A. Introduction

Ameresco Quantum completed a project valued at $1,240,236.05 for Centralia School District in July 2011. This report details the measurement and verification (M&V) of savings during the reporting period for that project. M&V efforts included a detailed analysis of each energy conservation measure (ECM) using energy management system (EMS) trends, utility bill analysis, and other means.

B. Project Overview

This project greatly improved comfort and visibility in the schools while saving energy and water. Centralia Middle School and Edison Elementary School both received upgrades to their respective heating and ventilation control systems. These controls upgrades were also fully commissioned. The boiler systems at Centralia Middle School, Edison Elementary School, and Jefferson Lincoln Elementary School were replaced with high efficiency condensing boiler systems. The existing control systems at Centralia High School and Jefferson Lincoln Elementary School were fully commissioned for optimal performance. The lighting systems in Centralia High School, Edison Elementary School, Jefferson Lincoln Elementary School, Fords Prairie Elementary School, Oakview Elementary School, and Washington Elementary School were retrofit with electronically ballasted T8 lamps and compact fluorescent technology. The plumbing systems at Centralia High School, Centralia Middle School, Edison Elementary School, Jefferson Lincoln Elementary School, Fords Prairie Elementary School, Oakview Elementary School, and Washington Elementary School were retrofit or replaced with low flow devices and fixtures.

C. Energy Savings Results

Detailed analysis of the conservation measures determined that the measures are operating properly. The guaranteed and verified commodity savings for the reporting year are shown below in Table 1.

Table 1: Summary of the energy guarantee and verified avoided energy use

	Electricity (kWh/yr.)	Electricity (kW/yr.)	Natural Gas (therm/yr.)	Water (CCF/yr.)
Guaranteed	661,473	1,744	9,225	1,590
Verified	734,970	1,938	10,250	1,766

Table 2 below shows the dollar value of the verified avoided energy use at the baseline and reporting rates. It is useful for seeing how the change in utility rates over the course of the project has affected the financial savings.

Table 2: Change in avoided costs due to change in utility rates

	Electric Consumption	Electric Demand	Natural Gas	Water	Total
Verified at 2009 Rates	$37,263	$8,081	$9,460	$26,072	$80,876
Verified at 2012 Rates	$42,996	$10,252	$7,958	$32,803	$94,009

At the reporting period rates, the net savings is $94,009. This is adequate to repay the estimated loan of $689,116.

In addition to the cost and energy savings, the project has reduced annual emissions by 358.6 tons of CO_2, 0.3 tons of SO_2, and 1.2 tons of NO_x.

D. Conclusion

Ameresco Quantum is pleased to report on the success of this project and has appreciated partnering with the Centralia School District to reduce their energy use along with the associated costs and emissions. The submission of this report and a meeting to discuss it completes Ameresco Quantum's M&V responsibility defined in section III.6 of the energy services proposal (ESP).

II. M&V Process

A. International Performance Measurement and Verification Protocol (IPMVP)

IPMVP is an international framework for establishing how energy savings can be determined. It provides a consistent terminology to discuss M&V and it offers guidelines for establishing M&V plans while allowing tradeoffs for measurement accuracy versus cost. The foundational principles of IPMVP are accuracy, completeness, conservativeness, consistency, relevance, and transparency.

The methodology employed for the M&V of this project follows modified IPMVP guidelines. IPMVP Option A was used for the boiler and controls measures and manufacturer ratings were used for the lighting and water measures. Additionally, a utility bill analysis based on IPMVP Option C is provided for informational purposes. Descriptions for the M&V options are provided below from the IPMVP handbook[1] and detailed descriptions of the M&V approach for each ECM can be found in section III.

Option A (Retrofit Isolation: Key Parameter Measurement)—"Savings are determined by field measurement of the key performance parameter(s) which define energy use of the ECM's affected system(s)…Parameters not selected for field measurement are estimated."

[1] *International Performance Measurement and Verification Protocol: Concepts and Options for Determining Energy and Water Savings*, Volume I, 2012, Chapter 4.6

Option C (Whole Facility)—"Savings are determined by measuring energy use at the whole facility or sub-facility level."

B. M&V Agreement

As stated in section III.6 of the ESP:

6. *Performance Maintenance: The ESCO will provide on-going monitoring and support services to help insure the predicted savings are achieved throughout the first year of the agreement. Specific tasks will include:*

   a) *Year One (the first year following Notice of Commencement of Energy Savings):*

      (1) *Annual review of Energy Management System (EMS) and system performance. This will be done via trend logs of system performance. A detailed report will indicate system performance for the first year.*

      (2) *Annual analysis of functionality of lighting and plumbing equipment. This will be done via review of the installed lighting and plumbing systems.*

      (3) *Attend one annual meeting to review the ESCO equipment performance and reconcile energy savings.*

C. Guarantee Method

As stated in section IX.B of the ESP:

1. *The Owner and the ESCO agree that the energy savings exist if the ESCO equipment performs as described below:*

   a) *Lighting Systems installed by the ESCO: The lighting systems being replaced perform properly when new components with efficiencies at or greater than those in Exhibit 1 are installed.*

   b) *Boiler System: The boiler system performs properly if boiler combustion efficiency is equal to or greater than 90% combustion efficiency.*

   c) *Control System: The control system performs properly when equipment is able to be scheduled on and off, and when the systems properly modulate the outdoor air economizer.*

   d) *Water Systems installed by the ESCO: The water systems being replaced perform properly when new components with efficiencies at or greater than those in Exhibit 1 are installed.*

2. *The Owner and the ESCO agree that the energy savings will be reduced at the rates listed below when the ESCO installed equipment is not performing as a result of the sole failure of the ESCO installed equipment. The Owner agrees to notify the ESCO by telephone within 2 working days of detecting any non-performing ESCO installed equipment, with a follow-up in writing within three business days. Should the ESCO installed equipment not perform in accordance with this Section, the Energy Cost Savings will be reduced by:*

a) *HVAC & Controls: $0.00085 per square foot per failed area per week.*

b) *Lighting: $0.00209 per square foot per failed area per week.*

c) *Water: $0.00116 per square foot per failed area per week.*

3. *The ESCO shall have two weeks from notification to repair the ESCO equipment without reduction of savings.*
4. *Modifications to Baseline by Owner: The Owner shall maintain all existing facilities and installed equipment during the term of this contract at or above current maintenance levels. Owner agrees to maintain the energy efficiency of the systems installed.*

D. Additional M&V

As part of the ESP, Ameresco Quantum has provided M&V after the first year of the agreement to help ensure the guaranteed savings are achieved and to report on the actual energy savings.

Continued M&V reports may be provided at a total cost of $7,400 per year ($5,400 is Ameresco Quantum's fee and $2,000 is the Department of Enterprise Services' fee) under a separate agreement at the owner's request to maintain the savings guarantee. The M&V services, however, must be continuous in order to maintain the guarantee. These services will measure energy savings and provide engineering assistance to maintain the savings. The owner may cancel these services at any time.

III. ECM Descriptions

A. Lighting Measures

1. <u>ECM List</u>

   ECM-CHS-L1, ECM-EES-L1, ECM-JLES-L1, ECM-FPES-L1, ECM-OES-L1, and ECM-WES-L1

2. <u>Description</u>

   These measures retrofit or replaced any remaining T12, magnetically ballasted or incandescent fixtures with T8, electronically ballasted fixtures and compact fluorescent technology. Additionally, many of the HID fixtures were replaced with fluorescent technology.

3. <u>M&V Approach</u>

   Per the ESP, the energy savings exist if the installed lighting meets or exceeds the efficiencies of the proposed lighting, so Ameresco Quantum compared the audit lighting spreadsheets with the as-built spreadsheets.

4. Findings

Due to some minor changes in scope, the installed lighting slightly outperformed what was proposed in the audit. Table 3 shows the energy and demand savings listed in the audit and as-built spreadsheets. Copies of the as-built spreadsheets are provided in the appendix.

Table 3: Comparison of proposed and as-built savings from lighting measures

Facility	Proposed Savings		As-Built Savings	
	Energy (kWh)	Demand (kW)	Energy (kWh)	Demand (kW)
Centralia HS	159,807	453	164,498	546
Edison ES	104,555	341	103,753	414
Jefferson Lincoln ES	104,866	307	107,413	373
Fords Prairie ES	94,043	327	100,425	392
Oakview ES	59,052	192	61,969	230
Washington ES	95,503	317	97,977	374
Total:	617,826	1,937	636,035	2,329

5. Other Benefits

The lighting measures improved the light quality and levels in the facilities.

B. Water Measures

1. ECM List

ECM-CHS-W1, ECM-CMS-W1, ECM-EES-W1, ECM-JLES-W1, ECM-FPES-W1, ECM-OES-W1, and ECM-WES-W1

2. Description

These measures retrofit or replaced toilets, urinals, and sinks with low consumption fixtures and devices.

3. M&V Approach

Per the ESP, the energy savings exist if the installed water conservation devices meet or exceed the efficiencies of those proposed. To verify this, Ameresco Quantum reviewed the data sheets for the installed urinals and water closets. They are provided in the appendix.

4. Findings

The urinals are rated at 0.13 gpf and the water closets are rated at 1.28 gpf. Both of those ratings exceed what Ameresco Quantum had proposed; therefore, the energy savings exist. The data sheets for the installed devices are provided in the appendix.

C. ECM-CHS-M3

1. Description

   This measure verified that the existing control sequences are operating as intended— including but not limited to runtime schedules, economizer operation, morning warm-up, and night setback sequences.

2. M&V Approach

   Per the ESP, no specific M&V tasks were assigned to these measures.

3. Other Benefits

   The retro commissioning of the Centralia HS control system optimized its performance, which leads to fewer comfort complaints and minimizes maintenance issues through proper operation of equipment.

D. ECM-CMS-M1

1. Description

   This measure replaced the existing Raypack boilers with new high efficiency condensing boilers.

2. M&V Approach

   Using IPMVP Option A, Ameresco Quantum measured the key parameter of combustion efficiency of the new boilers.

3. Findings

   With supply and return water temperatures of 132°F and 127°F respectively, boiler 1 tested at 89.4% efficient. With supply and return water temperatures of 135°F and 128°F respectively, boiler 2 also tested at 89.4%. Considering the poor temperature delta due to low heating load at the time of testing, Ameresco Quantum is confident the boilers can meet the 90% threshold identified in the ESP. Because of that, the energy saving guarantee has been met. The boiler test tapes are provided in the appendix.

E. ECM-CMS-M3

1. Description

   This measure implemented demand control ventilation using CO_2 sensors and occupied stand-by control using occupancy sensors for areas of sporadic occupancy. This measure also replaced two failing control zone supervisors.

2. M&V Approach

   Using IPMVP Option A, Ameresco Quantum trended the key parameters of CO_2 level and outside air damper position in order to verify the proper function of the demand control ventilation system.

3. Findings

Figure 1: CO_2 control at CMS gym

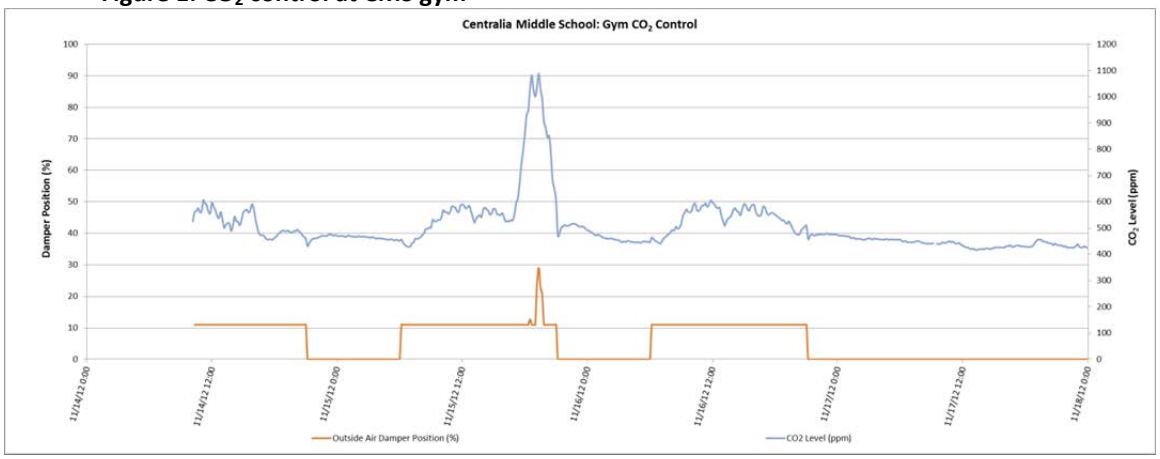

Due to the limitations of the existing control system, only about one week of data is available to download. The data show proper operation of the demand ventilation control in the gym. This is evidenced by the outside air damper remaining at minimum position during all occupied times except when the CO_2 limit is exceeded. The damper then opens enough to bring the CO_2 level down to acceptable levels. When the gym is scheduled as unoccupied, the data show that the outside air damper is closed—as it should be.

Ameresco Quantum also installed a CO_2 sensor in the multipurpose room; however, the data from it is clearly inaccurate as it is reading levels below 10 ppm (see Figure 2), which is far below the CO_2 concentration of outdoor air. Ameresco Quantum recommends that Centralia School District recalibrate the CO_2 sensor.

Figure 2: CO_2 levels for the CMS multipurpose room

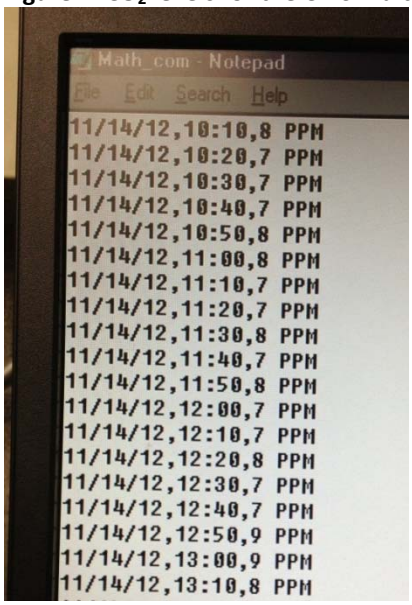

4. Other Benefits

The controls measure improved indoor air quality at the middle school.

F. ECM-EES-M1

1. Description

This measure replaced the existing Cleaver Brooks steam boiler with new high efficiency condensing hot water boilers.

2. M&V Approach

Using IPMVP Option A, Ameresco Quantum measured the key parameter of combustion efficiency of the new boilers.

3. Findings

With supply and return water temperatures of 143°F and 136°F respectively, boiler 2 tested at 89.8% efficient. Boiler 1 was offline and unavailable for testing at the time of the site visit. Considering the poor temperature delta due to low heating load at the time of testing, Ameresco Quantum is confident the boilers can meet the 90% threshold identified in the ESP. Because of that, the energy saving guarantee has been met. The boiler test tapes are provided in the appendix.

G. ECM-EES-M2

1. Description

This measure upgraded the existing pneumatic control system to full DDC and implemented demand control ventilation using CO_2 sensors and occupied stand-by control using occupancy sensors for the multi-purpose room.

2. M&V Approach

Using IPMVP Option A, Ameresco Quantum trended the key parameters of fan status, outside air damper position, mixed air temperature, return air (or zone) temperature, and outside air temperature in order to verify the system's capability to properly modulate the outside air dampers and run the HVAC equipment according to schedule.

3. Findings

Schedules

Figure 3: EES AHU-1 fan start/stop

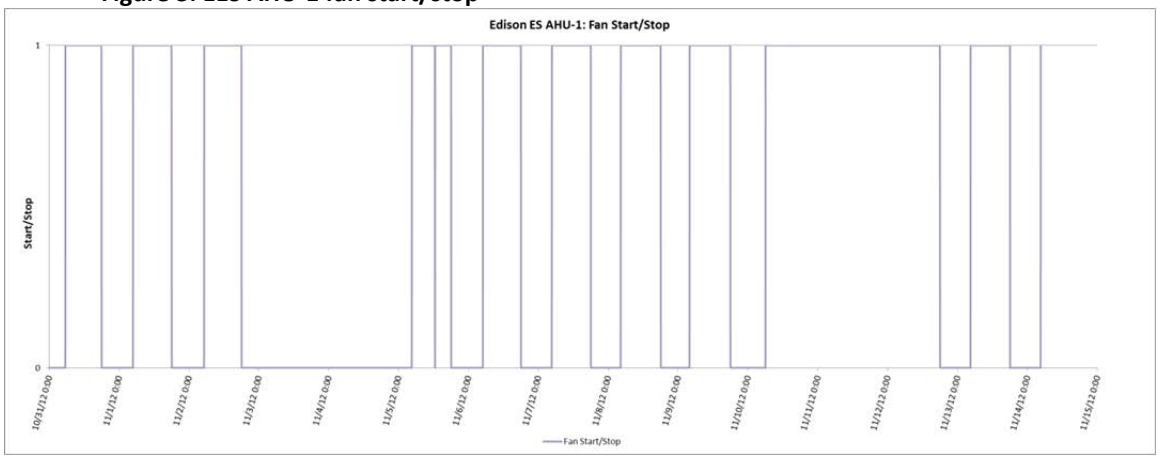

Figure 4: EES AHU-2 fan start/stop

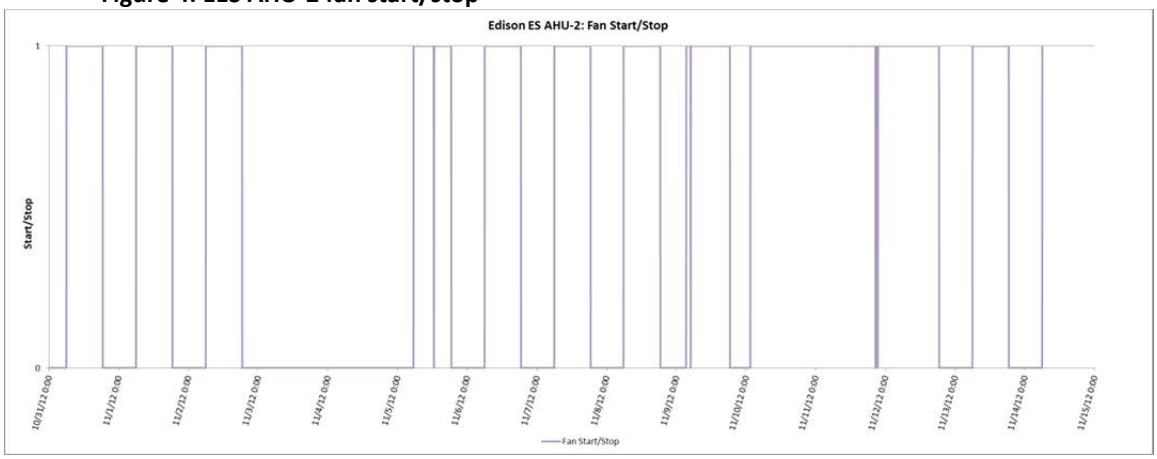

Figure 5: EES AHU-3 fan start/stop

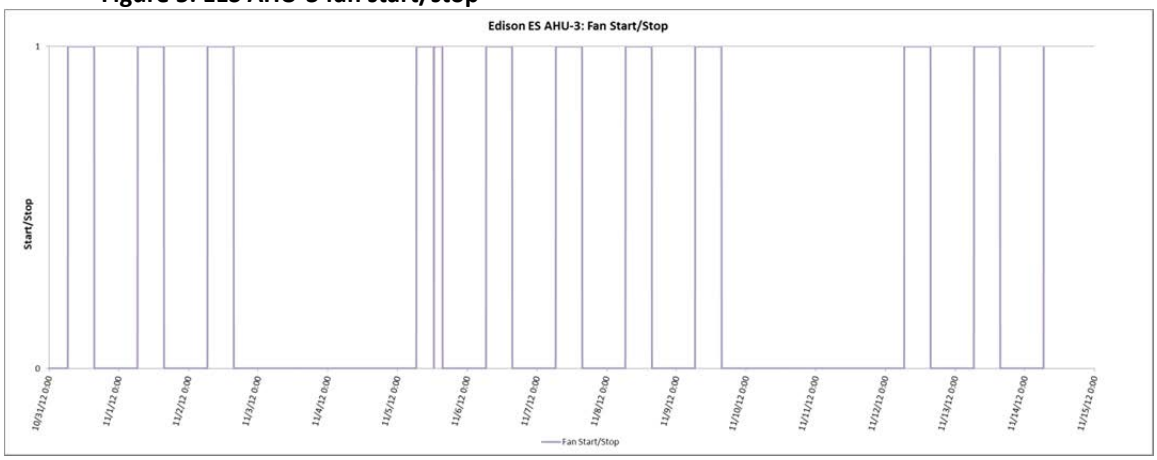

All of the air handlers at Edison Elementary School are stopping on schedule, but AHU-1 and -2 are starting a little early most mornings. This is likely due to optimum start functionality considering the cold mornings during the trending period. AHU-3 is starting on schedule. The only significant deviation from schedule is the weekend of November 10th-11th when AHU-1 and -2 were on continuously. Since that was an isolated incident that only occurred once, it was most likely due to a special event or manual override.

Economizers

Figure 6: EES AHU-1 economizer functionality

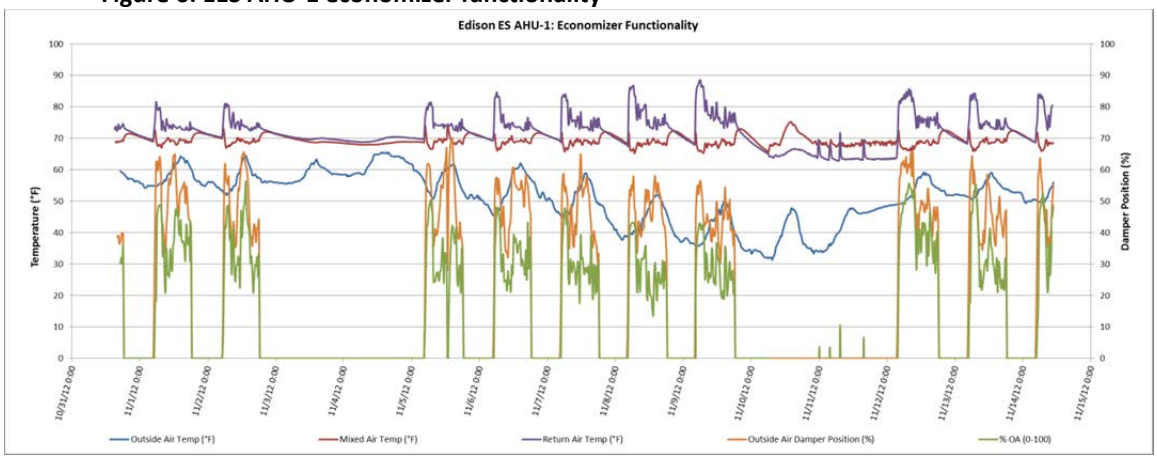

Figure 7: EES AHU-2 economizer functionality

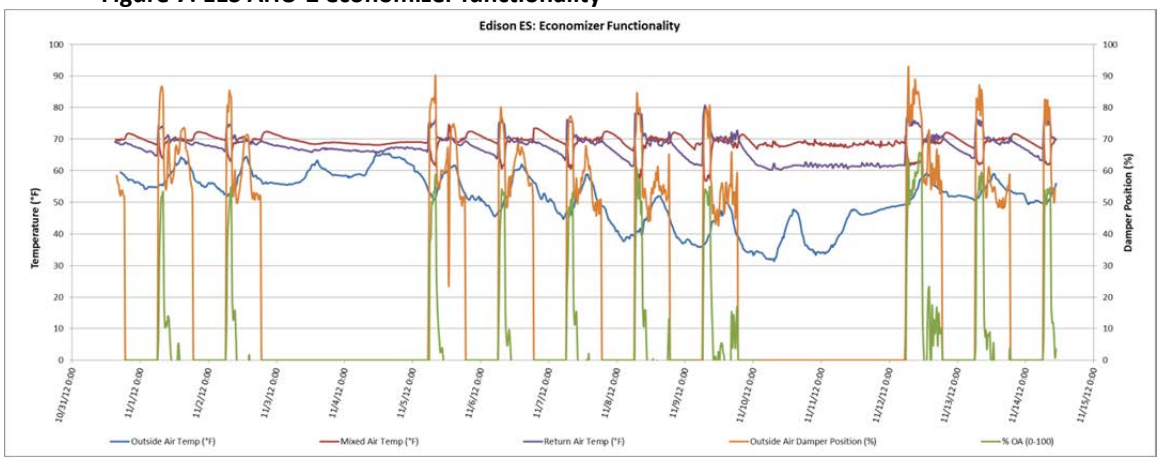

Figure 8: EES AHU-3 economizer functionality

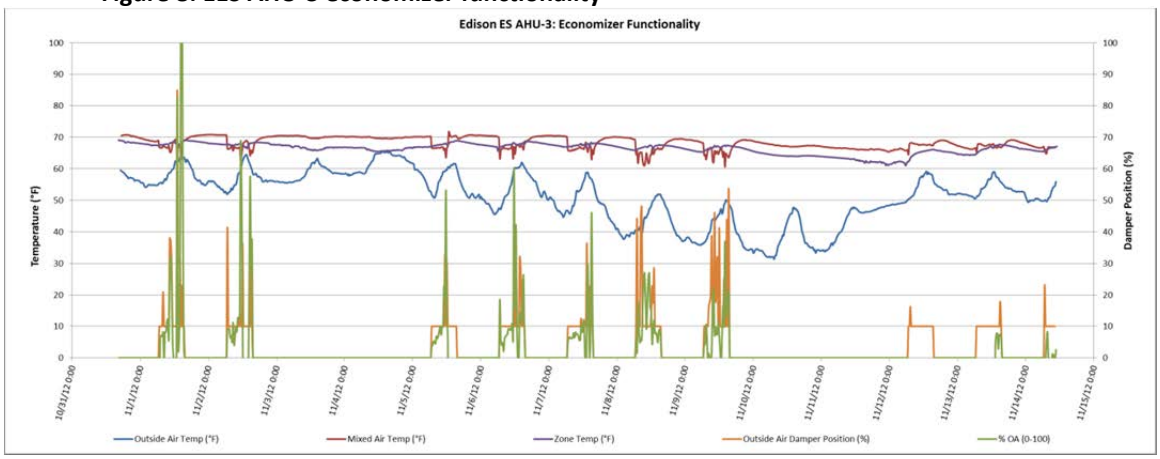

The economizer trends show that all of the air handlers have a distinct minimum position—about 40% for AHU-1, 50% for AHU-2, and 10% for AHU-3—and then they open further during occupied times for control purposes. As is appropriate, all of the outside air dampers close completely during unoccupied times. It should be noted that for AHU-2, the temperature differences were not great enough in the afternoons for the %OA values to be calculated correctly. That is why Figure 7 shows no outside air in the afternoons despite also showing that the outside air damper is open.

Because the systems are operating to schedule and the outside air dampers are functioning properly, the guaranteed energy savings associated with this measure has been verified.

4. Other Benefits

The controls measure at Edison ES improved comfort control in the building and optimized system functionality. Additionally, it upgraded the control system making it easier to use and easier for the maintenance personnel to respond to problems.

H. ECM-JLES-M1

1. Description

This measure verified that the existing control sequences are operating as intended— including but not limited to runtime schedules, economizer operation, morning warm-up, and night setback sequences.

2. M&V Approach

Per the ESP, no specific M&V tasks were assigned to these measures.

3. Other Benefits

The retro commissioning of the Jefferson Lincoln ES control system optimized its performance, which leads to fewer comfort complaints and minimizes maintenance issues through proper operation of equipment.

I. ECM-JLES-M3

1. Description

This measure replaced the existing Cleaver Brooks steam boiler with new high efficiency condensing hot water boilers.

2. M&V Approach

Using IPMVP Option A, Ameresco Quantum measured the key parameter of combustion efficiency of the new boilers.

3. Findings

With supply and return water temperatures of 155°F and 110°F respectively, the boiler tested at 93.0% efficient. Because of that, the energy saving guarantee has been met. The boiler test tapes are provided in the appendix.

IV. Utility Bill Analysis

This utility bill analysis is provided only for informational purposes—not for verifying avoided energy use. Ameresco Quantum relied on the findings reported in Section III to verify the guaranteed avoided energy use. It should be noted that the guaranteed savings for electrical consumption (kWh) and demand (kW) are nearly too small to be reliably seen on the utility bills. IPMVP guidelines state that utility bill analysis should generally only be used to verify savings greater than 10% of total use[2]. This is because the normal unexplained fluctuations in the bills overwhelm savings when they are less than 10% of total use. For this project, the consumption savings (kWh) is 11.4% of total use and demand savings (kW) is 9.6% of total use.

A. Baseline Period

In the ESP, the baseline period was stated as being 2007 and 2008; however, the numbers reported were actually from September 2008 through August 2009.

[2] *International Performance Measurement and Verification Protocol: Concepts and Options for Determining Energy and Water Savings*, Volume I, 2012, Chapter 4.8

B. Reporting Period

The first full year after the commencement of energy savings for this project was July 2011 through June 2012. This is the reporting period.

C. Consumption

The tables below show the energy use at each school, except Table 11 which shows the energy use for all seven schools in this project together. Please note that the natural gas consumption only includes use at Centralia HS, Centralia MS, Edison ES, and Jefferson Lincoln ES. The baseline numbers are slightly different from those reported in the ESP due to corrections made by the school district since the ESP was published.

Table 4: Total energy use by commodity at CHS for the baseline and reporting periods

	Centralia High School			
	Electricity (kWh)	Electricity (kW)	Natural Gas (therm)	Water (CCF)
Baseline	2,582,400	8,049	5,722	1,276
Reporting	2,454,600	9,182	5,281	1,044

Table 5: Total energy use by commodity at CMS for the baseline and reporting periods

	Centralia Middle School			
	Electricity (kWh)	Electricity (kW)	Natural Gas (therm)	Water (CCF)
Baseline	751,501	2,424	23,174	1,235
Reporting	707,532	2,228	24,867	688

Table 6: Total energy use by commodity at EES for the baseline and reporting periods

	Edison Elementary School			
	Electricity (kWh)	Electricity (kW)	Natural Gas (therm)	Water (CCF)
Baseline	265,120	1,094	18,479	259
Reporting	244,640	960	11,431	327

Table 7: Total energy use by commodity at JLES for the baseline and reporting periods

	Jefferson Lincoln Elementary School			
	Electricity (kWh)	Electricity (kW)	Natural Gas (therm)	Water (CCF)
Baseline	377,911	2,038	4,645	509
Reporting	374,055	1,595	4,236	619

Table 8: Total energy use by commodity at FPES for the baseline and reporting periods

	Fords Prairie Elementary School			
	Electricity (kWh)	Electricity (kW)	Natural Gas (therm)	Water (CCF)
Baseline	626,815	2,091	NA	728
Reporting	526,148	2,750	NA	440

Table 9: Total energy use by commodity at OES for the baseline and reporting periods

	Oakview Elementary School			
	Electricity (kWh)	Electricity (kW)	Natural Gas (therm)	Water (CCF)
Baseline	568,653	2,640	NA	787
Reporting	655,363	2,655	NA	305

Table 10: Total energy use by commodity at WES for the baseline and reporting periods

	Washington Elementary School			
	Electricity (kWh)	Electricity (kW)	Natural Gas (therm)	Water (CCF)
Baseline	766,796	2,651	NA	510
Reporting	781,161	2,692	NA	444

Table 11: Total energy use by commodity at all schools for the baseline and reporting periods

	Project Totals			
	Electricity (kWh)	Electricity (kW)	Natural Gas (therm)	Water (CCF)
Baseline	5,939,196	20,986	52,020	5,304
Reporting	5,743,499	22,062	45,814	3,867

D. Adjustments

Ameresco Quantum did not adjust the baseline.

E. Utility Rates

Table 12: Baseline and current utility rates

	Electricity ($/kWh)	Electricity ($/kW)	Natural Gas ($/therm)	Water ($/CCF)	Sewer ($/CCF)
Baseline (2009)	$0.0507	$4.17	$0.9229	$2.72	$12.04
Current (2012)	$0.0585	$5.29	$0.7764	$3.72	$14.85

These rates represent the dollar amount that is saved if the district avoids using one unit of each commodity. Fixed costs such as base charges or meter fees are not included since an energy saving project cannot impact those costs. In the case where the facility has multiple meters for a single commodity and they are on different rate schedules, the rate above is the weighted average.

F. Utility Bill Analysis Results

Table 13 shows the energy savings on the utility bills between the baseline and reporting periods. Note that this table is only for informational purposes as the guaranteed savings for the project are verified through the methods described in Section III.

Table 13: Energy savings on the utility bills between the baseline and reporting periods

Electricity (kWh)	Electricity (kW)	Natural Gas (therm)	Water (CCF)
195,697	-1,076	6,205	1,437

Figure 9: Baseline and reporting period electricity consumption

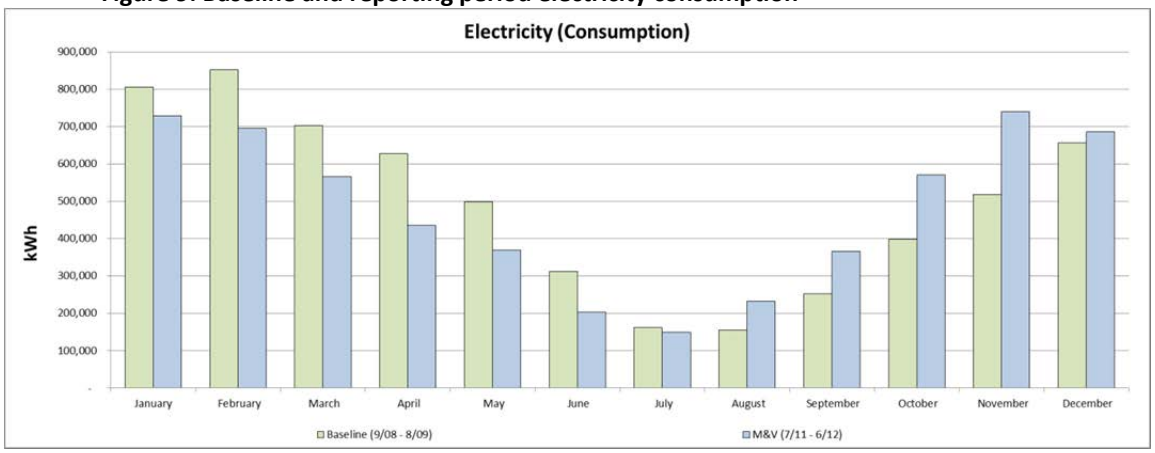

Figure 10: Baseline and reporting period electricity demand

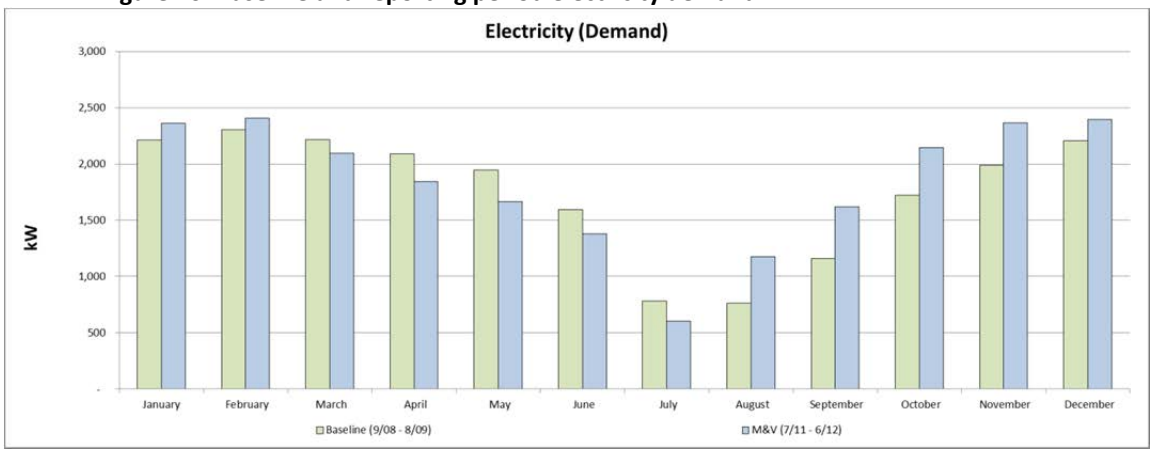

Figure 11: Baseline and reporting period natural gas consumption

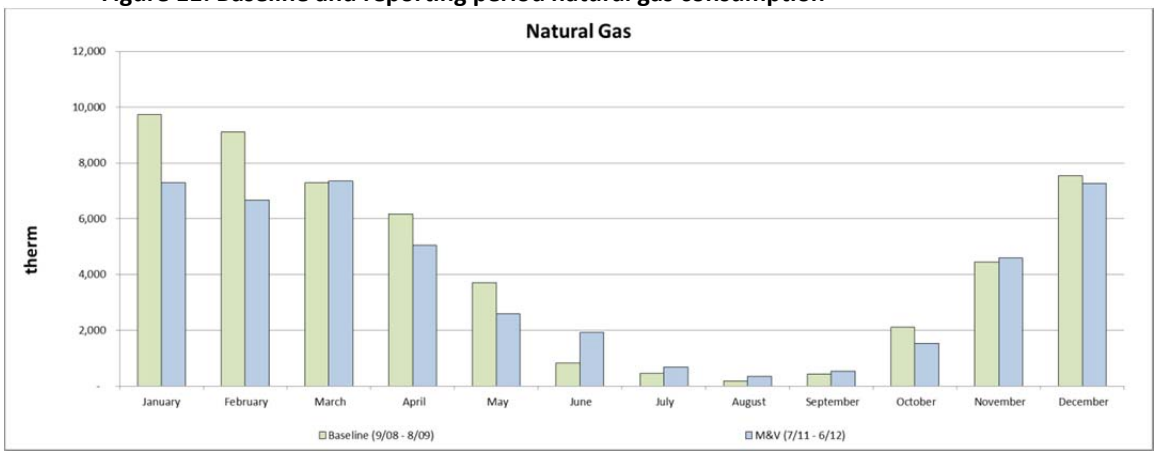

Figure 12: Baseline and reporting period water consumption

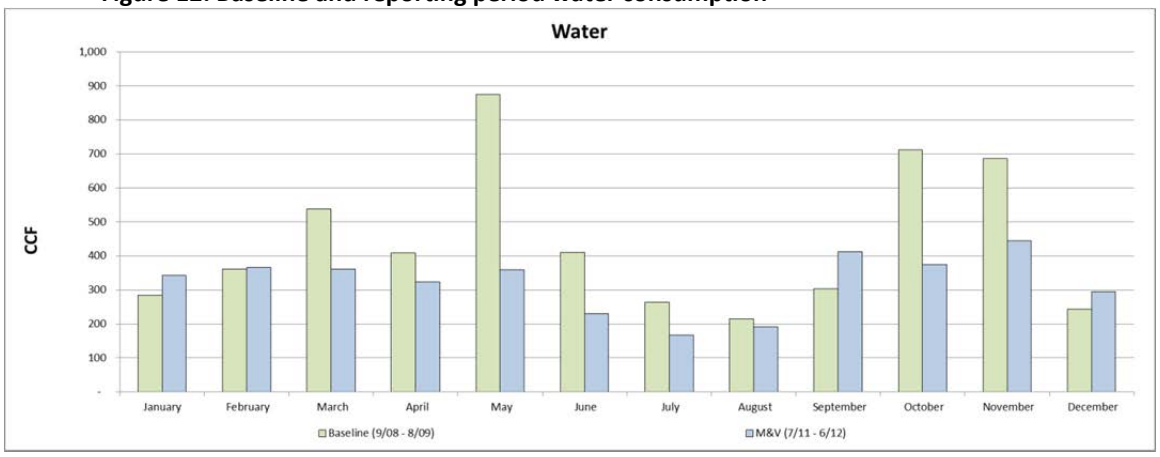

V. Conclusion

Ameresco Quantum is pleased to report that the results of M&V show the ECMs are functioning properly and have decreased Centralia School District's electricity, natural gas, and water consumption, which has lowered the cost to operate the buildings and reduced their carbon footprint. In addition, this project resulted in the following non-energy related benefits:

- The lighting measures improved the light quality and levels in the facilities.
- The retro commissioning of the Centralia HS control system optimized its performance, which leads to fewer comfort complaints and minimizes maintenance issues through proper operation of equipment.
- The controls measure at Centralia Middle School improved indoor air quality in the facility.
- The controls measure at Edison ES improved comfort control in the building and optimized system functionality. Additionally, it upgraded the control system

making it easier to use and easier for the maintenance personnel to respond to problems.

- The retro commissioning of the Jefferson Lincoln ES control system optimized its performance, which leads to fewer comfort complaints and minimizes maintenance issues through proper operation of equipment.

VI. Appendix

A. Lighting As-builts

Washington Elementary
Facility name
Rachael Rieken
Form completed by

	Location		Existing Lighting*														
				Quantity										kWh/Yr Adjusted		
Ln. #	Loc. #	Location Name (floor,	Existing Fixture Description/Model	Ind. Wired	Tandem Wired	Lamp Type	Lamp Watts	Ballast Type	Watts/ Unit**	Total kW	Hours/ Yr	kWh/Yr	N,R or A***	Remove Fixture	Retrofit with Kit/Comp.	Remain As Is
1	Washington Elementary	Main Office	F40T12ES 34W, std ballast, Wrap	8		F	2/34	M	72	0.576	2766	1,593	R		1593.216	
2	Washington Elementary	Office	F40T12ES 34W, std ballast, Surface	1		F	8/34	M	328	0.328	2402	788	R		787.856	
3	Washington Elementary	Office #2	F40T12, std ballast, Surface Mount	2		F	4/34	M	147	0.294	2402	706	R		706.188	
4	Washington Elementary	Lunch Room	F40T12ES 34W, std ballast, Wrap	4		F	2/34	M	72	0.288	2766	797	R		796.608	
5	Washington Elementary	Lunch Room	F40T12ES 34W, std ballast, Wrap	3		F	2/34	M	72	0.216	2766	597	R		597.456	
6	Washington Elementary	Lunch Room RR	F40T12ES 34W, std ballast, Wrap	1		F	2/34	M	72	0.072	2766	199	R		199.152	
7	Washington Elementary	Server Room	Incandescent 100 watt	1		I	1/100	N/A	100	0.1	2188	219	R		218.8	
8	Washington Elementary	Room Closet	Incandescent 100 watt	1		I	1/100	N/A	100	0.1	2188	219	R		218.8	
9	Washington Elementary	Storage	Incandescent 60 watt	1		I	1/60	N/A	60	0.06	2920	175	R		175.2	
10	Washington Elementary	Office Closet	Incandescent 100 watt	1		I	1/100	N/A	100	0.1	2920	292	R		292	
11	Washington Elementary	Room 106	F40T12ES 34W, std ballast, Wrap	2		F	2/34	M	72	0.144	2038	293	R		293.472	
12	Washington Elementary	Classroom 107	F40T12ES 34W, std ballast, Wrap	18		F	2/34	M	72	1.296	2038	2,641	R		2641.248	
13	Washington Elementary	Classroom 107	F40T12ES 34W, std ballast, Wrap	3		F	2/34	M	72	0.216	2038	440	R		440.208	
14	Washington Elementary	Classroom 108	F40T12ES 34W, std ballast, Wrap	18		F	2/34	M	72	1.296	2038	2,641	R		2641.248	
15	Washington Elementary	Classroom 108	F40T12ES 34W, std ballast, Wrap	3		F	2/34	M	72	0.216	2038	440	R		440.208	
16	Washington Elementary	Classroom 110	F40T12ES 34W, std ballast, Wrap	18		F	2/34	M	72	1.296	2038	2,641	R		2641.248	
17	Washington Elementary	Classroom 110	F40T12ES 34W, std ballast, Wrap	3		F	2/34	M	72	0.216	2038	440	R		440.208	
18	Washington Elementary	Classroom 112	F40T12ES 34W, std ballast, Wrap	18		F	2/34	M	72	1.296	2038	2,641	R		2641.248	
19	Washington Elementary	Classroom 112	F40T12ES 34W, std ballast, Wrap	3		F	2/34	M	72	0.216	2038	440	R		440.208	
20	Washington Elementary	Restroom	F40T12ES 34W, std ballast, Surface	1		F	2/34	M	72	0.072	2766	199	R		199.152	
21	Washington Elementary	Classroom 113	F40T12ES 34W, std ballast, Troffer	4		F	2/34	M	72	0.288	2038	587	R		586.944	
22	Washington Elementary	Classroom 113	F40T12ES 34W, std ballast, Troffer	1		F	2/34	M	72	0.072	2038	147	R		146.736	
23	Washington Elementary	Classroom 114	F40T12ES 34W, std ballast, Troffer	18		F	2/34	M	72	1.296	2038	2,641	R		2641.248	
24	Washington Elementary	Classroom 115	F40T12ES 34W, std ballast, Troffer	18		F	2/34	M	72	1.296	2038	2,641	R		2641.248	
25	Washington Elementary	Classroom 111	F40T12ES 34W, std ballast, Wrap	18		F	2/34	M	72	1.296	2038	2,641	R		2641.248	

	Location	Proposed Lighting*														
			Quantity									Enter	kWh/Yr Adjusted		
Ln #	Location Name (floor,	Proposed Fixture Description/Model	Ind. Wired	Tandem Wired	Lamp Type	Lamp Watts	Ballast Type	Watts/ Unit	Total kW	Hours/ Yr	kWh/ Yr	N,R or A***	New Fixture	Retro. with kit/comp.	Remain As Is
1	Main Office	Tandem HALCO EP432IS/L/MV/HE		4	F	4/28	E	84	0	2,766	929	R		929	
2	Office	lamp, F28T8/E HALCO (2) EP232IS/N/MV/HE +US	1		F	4/28	E	96	0	2,402	231	R		231	
3	Office #2	F28T8/E HALCO EP232IS/N/MV/HE +US	2		F	2/28	E	48	0	2,402	231	R		231	
4	Lunch Room	Tandem HALCO EP432IS/L/MV/HE		2	F	4/28	E	84	0	2,766	465	R		465	
5	Lunch Room	(Reduced Wattage) ballast HALCO EP232IS/L/MV/HE	3		F	2/28	E	42	0	2,766	349	R		349	
6	Lunch Room RR	(Reduced Wattage) ballast HALCO EP232IS/L/MV/HE	1		F	2/28	E	42	0	2,766	116	R		116	
7	Server Room	23watt CFL, Screwin TCP28923	1		CF	1/23		23	0	2,188	50	R		50	
8	Room Closet	23watt CFL, Screwin TCP28923	1		CF	1/23		23	0	2,188	50	R		50	
9	Storage	23watt CFL, Screwin TCP28923	1		CF	1/23		23	0	2,920	67	R		67	
10	Office Closet	23watt CFL, Screwin TCP28923	1		CF	1/23		23	0	2,920	67	R		67	
11	Room 106	(Reduced Wattage) ballast HALCO EP232IS/L/MV/HE	2		F	2/28	E	42	0	2,038	171	R		171	
12	Classroom 107	Tandem HALCO EP432IS/L/MV/HE		9	F	4/28	E	84	1	2,038	1,541	R		1,541	
13	Classroom 107	(Reduced Wattage) ballast HALCO EP232IS/L/MV/HE	3		F	2/28	E	42	0	2,038	257	R		257	
14	Classroom 108	Tandem HALCO EP432IS/L/MV/HE		9	F	4/28	E	84	1	2,038	1,541	R		1,541	
15	Classroom 108	(Reduced Wattage) ballast HALCO EP232IS/L/MV/HE	3		F	2/28	E	42	0	2,038	257	R		257	
16	Classroom 110	Tandem HALCO EP432IS/L/MV/HE		9	F	4/28	E	84	1	2,038	1,541	R		1,541	
17	Classroom 110	(Reduced Wattage) ballast HALCO EP232IS/L/MV/HE	3		F	2/28	E	42	0	2,038	257	R		257	
18	Classroom 112	Tandem HALCO EP432IS/L/MV/HE		9	F	4/28	E	84	1	2,038	1,541	R		1,541	
19	Classroom 112	(Reduced Wattage) ballast HALCO EP232IS/L/MV/HE	3		F	2/28	E	42	0	2,038	257	R		257	
20	Restroom	(Reduced Wattage) ballast HALCO EP232IS/L/MV/HE	1		F	2/28	E	42	0	2,766	116	R		116	
21	Classroom 113	(Reduced Wattage) ballast HALCO EP232IS/L/MV/HE	4		F	2/28	E	42	0	2,766	465	R		465	
22	Classroom 113	(Reduced Wattage) ballast HALCO EP232IS/L/MV/HE	1		F	2/28	E	42	0	2,038	86	R		86	
23	Classroom 114	(Reduced Wattage) ballast HALCO EP232IS/L/MV/HE	18		F	2/28	E	42	1	2,038	1,541	R		1,541	
24	Classroom 115	Tandem HALCO EP432IS/L/MV/HE	18		F	4/28	E	84	2	2,038	3,081	R		3,081	
25	Classroom 111	Tandem HALCO EP432IS/L/MV/HE		9	F	4/28	E	84	1	2,038	1,541	R		1,541	

Washington Elementary
Facility name
Rachael Rieken
Form completed by

	Location		Existing Lighting*														
				Quantity										kWh/Yr Adjusted		
Ln. #	Loc. #	Location Name (floor,	Existing Fixture Description/Model	Ind. Wired	Tandem Wired	Lamp Type	Lamp Watts	Ballast Type	Watts/ Unit**	Total kW	Hours/ Yr	kWh/Yr	N,R or A***	Remove Fixture	Retrofit with Kit/Comp.	Remain As Is
26	Washington Elementary	Classroom 111	F40T12ES 34W, std ballast, Wrap	3		F	2/34	M	72	0.216	2038	440	R		440.208	
27	Washington Elementary	Classroom 111 RR	Incandescent 60 watt	1		I	1/60	N/A	60	0.06	2766	166	R		165.96	
28	Washington Elementary	m 109 Book	F40T12ES 34W, std ballast, Wrap	12		F	2/34	M	72	0.864	2038	1,761	R		1760.832	
29	Washington Elementary	m 109 Book	F40T12ES 34W, std ballast, Wrap	3		F	2/34	M	72	0.216	2038	440	R		440.208	
30	Washington Elementary	Girls Restroom	F40T12ES 34W, std ballast, Wrap	6		F	2/34	M	72	0.432	2766	1,195	R		1194.912	
31	Washington Elementary	Girls Restroom	F40T12ES 34W, std ballast, Wrap	1		F	2/34	M	72	0.072	2766	199	R		199.152	
32	Washington Elementary	Boys Restroom	F40T12ES 34W, std ballast, Wrap	6		F	2/34	M	72	0.432	2766	1,195	R		1194.912	
33	Washington Elementary	Boys Restroom	F40T12ES 34W, std ballast, Wrap	1		F	2/34	M	72	0.072	2766	199	R		199.152	
34	Washington Elementary	Classroom 1104	F40T12ES 34W, std ballast, Wrap	18		F	2/34	M	72	1.296	2038	2,641	R		2641.248	
35	Washington Elementary	Classroom 1104	F40T12ES 34W, std ballast, Wrap	3		F	2/34	M	72	0.216	2038	440	R		440.208	
36	Washington Elementary	Classroom 201	F40T12ES 34W, std ballast, Wrap	18		F	2/34	M	72	1.296	2038	2,641	R		2641.248	
37	Washington Elementary	Classroom 201	F40T12ES 34W, std ballast, Wrap	3		F	2/34	M	72	0.216	2038	440	R		440.208	
38	Washington Elementary	Classroom 202	F40T12ES 34W, std ballast, Troffer	18		F	2/34	M	72	1.296	2038	2,641	R		2641.248	
39	Washington Elementary	Classroom 204	F40T12ES 34W, std ballast, Troffer	18		F	2/34	M	72	1.296	2038	2,641	R		2641.248	
40	Washington Elementary	Classroom 203	F40T12ES 34W, std ballast, Wrap	18		F	2/34	M	72	1.296	2038	2,641	R		2641.248	
41	Washington Elementary	Classroom 203	F40T12ES 34W, std ballast, Wrap	3		F	2/34	M	72	0.216	2038	440	R		440.208	
42	Washington Elementary	Boiler Room	Incandescent 150 watt	5		I	1/150	N/A	150	0.75	2188	1,641	N	1641		
43	Washington Elementary	Classroom 208	F40T12, std ballast, Troffer	6		F	4/34	M	147	0.882	2038	1,798	R		1797.516	
44	Washington Elementary	Library	F40T12ES 34W, std ballast, Surface	1		F	8/34	M	328	0.328	2766	907	R		907.248	
45	Washington Elementary	Library	F40T12ES 34W, std ballast, Wrap	54		F	2/34	M	72	3.888	2766	10,754	R		10754.208	
46	Washington Elementary	Library	F40T12ES 34W, std ballast, Wrap	1		F	2/34	M	72	0.072	2766	199	R		199.152	
47	Washington Elementary	Library Office	F40T12ES 34W, std ballast, Wrap	2		F	2/34	M	72	0.144	2402	346	R		345.888	
48	Washington Elementary	Library Office	F40T12ES 34W, std ballast, Wrap	1		F	2/34	M	72	0.072	2402	173	R		172.944	
49	Washington Elementary	Conference	F40T12ES 34W, std ballast, Wrap	4		F	2/34	M	72	0.288	2766	797	R		796.608	

	Location	Proposed Lighting*														
			Quantity									Enter	kWh/Yr Adjusted		
Ln #	Location Name (floor,	Proposed Fixture Description/Model	Ind. Wired	Tandem Wired	Lamp Type	Lamp Watts	Ballast Type	Watts/ Unit	Total kW	Hours/ Yr	kWh/ Yr	N,R or A***	New Fixture	Retro. with kit/comp.	Remain As Is
26	Classroom 111	(Reduced Wattage) ballast HALCO EP232IS/L/MV/HE	3		F	2/28	E	42	0	2,038	257	R		257	
27	Classroom 111 RR	23watt CFL, Screwin TCP28923	1		CF	1/23		23	0	2,766	64	R		64	
28	m 109 Book	(Reduced Wattage) ballast HALCO EP232IS/L/MV/HE	12		F	2/28	E	42	1	2,188	1,103	R		1,103	
29	m 109 Book	(Reduced Wattage) ballast HALCO EP232IS/L/MV/HE	3		F	2/28	E	42	0	2,038	257	R		257	
30	Girls Restroom	(Reduced Wattage) ballast HALCO EP232IS/L/MV/HE	6	3	F	2/28	E	42	0	2,766	697	R		697	
31	Girls Restroom	(Reduced Wattage) ballast HALCO EP232IS/L/MV/HE	1		F	2/28	E	42	0	2,766	116	R		116	
32	Boys Restroom	(Reduced Wattage) ballast HALCO EP232IS/L/MV/HE	6	3	F	2/28	E	42	0	2,766	697	R		697	
33	Boys Restroom	(Reduced Wattage) ballast HALCO EP232IS/L/MV/HE	1		F	2/28	E	42	0	2,766	116	R		116	
34	Classroom 1104	Tandem HALCO EP432IS/L/MV/HE		9	F	4/28	E	84	1	2,038	1,541	R		1,541	
35	Classroom 1104	(Reduced Wattage) ballast HALCO EP232IS/L/MV/HE	3		F	2/28	E	42	0	2,038	257	R		257	
36	Classroom 201	Tandem HALCO EP432IS/L/MV/HE		9	F	4/28	E	84	1	2,038	1,541	R		1,541	
37	Classroom 201	(Reduced Wattage) ballast HALCO EP232IS/L/MV/HE	3		F	2/28	E	42	0	2,038	257	R		257	
38	Classroom 202	(Reduced Wattage) ballast HALCO EP232IS/L/MV/HE	18		F	2/28	E	42	1	2,038	1,541	R		1,541	
39	Classroom 204	(Reduced Wattage) ballast HALCO EP232IS/L/MV/HE	18		F	2/28	E	42	1	2,038	1,541	R		1,541	
40	Classroom 203	Tandem HALCO EP432IS/L/MV/HE		9	F	4/28	E	84	1	2,038	1,541	R		1,541	
41	Classroom 203	(Reduced Wattage) ballast HALCO EP232IS/L/MV/HE	3		F	2/28	E	42	0	2,038	257	R		257	
42	Boiler Room	4', 2 lamp F32T8/E RW (Reduced Wattage) ballast, Strip Fixture TX FLOUR C232MV	5		F	2/28	E	44	0	2,188	481	N	481		
43	Classroom 208	F28T8/E HALCO EP232IS/N/MV/HE +US	6		F	2/28	E	48	0	2,038	587	R		587	
44	Library	lamp, F28T8/E HALCO (2) EP232IS/N/MV/HE +US	1		F	4/28	E	96	0	2,766	266	R		266	
45	Library	Tandem HALCO EP432IS/L/MV/HE		27	F	4/28	E	84	2	2,766	6,273	R		6,273	
46	Library	(Reduced Wattage) ballast HALCO EP232IS/L/MV/HE	1		F	2/28	E	42	0	2,766	116	R		116	
47	Library Office	Tandem HALCO EP432IS/L/MV/HE		1	F	4/28	E	84	0	2,402	202	R		202	
48	Library Office	(Reduced Wattage) ballast HALCO EP232IS/L/MV/HE	1		F	2/28	E	42	0	2,402	101	R		101	
49	Conference	Tandem HALCO EP432IS/L/MV/HE		2	F	4/28	E	84	0	2,766	465	R		465	

Washington Elementary
Facility name
Rachael Rieken
Form completed by

	Location		Existing Lighting*														
				Quantity										kWh/Yr Adjusted		
Ln. #	Loc. #	Location Name (floor,	Existing Fixture Description/Model	Ind. Wired	Tandem Wired	Lamp Type	Lamp Watts	Ballast Type	Watts/ Unit**	Total kW	Hours/ Yr	kWh/Yr	N,R or A***	Remove Fixture	Retrofit with Kit/Comp.	Remain As Is
50	Washington Elementary	Library Exits	Sign Fixture 2-15 Watt	1		I	2/15	N/A	30	0.03	8760	263	N	262.8		
51	Washington Elementary	under cabinets	F40T12ES 34W, std ballast, Strip	6		F	1/34	M	46	0.276	2766	763	R		763.416	
52	Washington Elementary	Classroom 206	F40T12ES 34W, std ballast, Wrap	18		F	2/34	M	72	1.296	2038	2,641	R		2641.248	
53	Washington Elementary	Classroom 206	F40T12ES 34W, std ballast, Wrap	3		F	2/34	M	72	0.216	2038	440	R		440.208	
54	Washington Elementary	Classroom 210	F40T12ES 34W, std ballast, Wrap	18		F	2/34	M	72	1.296	2038	2,641	R		2641.248	
55	Washington Elementary	Classroom 210	F40T12ES 34W, std ballast, Wrap	3		F	2/34	M	72	0.216	2038	440	R		440.208	
56	Washington Elementary	Room 211 Closet	F40T12ES 34W, std ballast, Wrap	1		F	2/34	M	72	0.072	2038	147	R		146.736	
57	Washington Elementary	Classroom 212	F40T12ES 34W, std ballast, Wrap	18		F	2/34	M	72	1.296	2038	2,641	R		2641.248	
58	Washington Elementary	Classroom 212	F40T12ES 34W, std ballast, Wrap	3		F	2/34	M	72	0.216	2038	440	R		440.208	
59	Washington Elementary	Classroom 213	F40T12ES 34W, std ballast, Wrap	18		F	2/34	M	72	1.296	2038	2,641	R		2641.248	
60	Washington Elementary	Classroom 213	F40T12ES 34W, std ballast, Wrap	3		F	2/34	M	72	0.216	2038	440	R		440.208	
61	Washington Elementary	Classroom 214	F40T12ES 34W, std ballast, Wrap	18		F	2/34	M	72	1.296	2038	2,641	R		2641.248	
62	Washington Elementary	Classroom 214	F40T12ES 34W, std ballast, Wrap	3		F	2/34	M	72	0.216	2038	440	R		440.208	
63	Washington Elementary	Girls Restroom	F40T12ES 34W, std ballast, Wrap	6		F	2/34	M	72	0.432	2766	1,195	R		1194.912	
64	Washington Elementary	Girls Restroom	F40T12ES 34W, std ballast, Wrap	1		F	2/34	M	72	0.072	2766	199	R		199.152	
65	Washington Elementary	Mens Restroom	F40T12ES 34W, std ballast, Wrap	6		F	2/34	M	72	0.432	2766	1,195	R		1194.912	
66	Washington Elementary	Mens Restroom	F40T12ES 34W, std ballast, Wrap	1		F	2/34	M	72	0.072	2766	199	R		199.152	
67	Washington Elementary	Gym	Metal halide , 400 watts	14		MH	1/400	M	461	6.454	2766	17,852	N	17851.764		
68	Washington Elementary	Stage Entry	F40T12ES 34W, std ballast, Wrap	1		F	2/34	M	72	0.072	2766	199	R		199.152	
69	Washington Elementary	Stage	Incandescent 150 watt	8		I	1/150	N/A	150	1.2	2766	3,319	N	3319.2		
70	Washington Elementary	Stage Loft	2 lamp, 4', F32T8 Electronic ballast	2		F	2/32	E	60	0.12	2766	332	R		331.92	
71	Washington Elementary	Stage Loft	F96T12 HO ES 95 watt lamp, std	1		F	2/95	M	227	0.227	2766	628	R		627.882	
72	Washington Elementary	Stage Storage	F40T12ES 34W, std ballast, Wrap	2		F	2/34	M	72	0.144	2920	420	R		420.48	
73	Washington Elementary	Gym Storage	F40T12ES 34W, std ballast, Wrap	3		F	2/34	M	72	0.216	2920	631	R		630.72	
74	Washington Elementary	Room 304	F40T12ES 34W, std ballast, Troffer	6		F	2/34	M	72	0.432	2038	880	R		880.416	

	Location	Proposed Lighting*														
			Quantity									Enter	kWh/Yr Adjusted		
Ln #	Location Name (floor,	Proposed Fixture Description/Model	Ind. Wired	Tandem Wired	Lamp Type	Lamp Watts	Ballast Type	Watts/ Unit	Total kW	Hours/ Yr	kWh/ Yr	N,R or A***	New Fixture	Retro. with kit/comp.	Remain As Is
50	Library Exits	battery , by TCP or equivalent 22745	1		LED	1/		3	0	8,760	26	N	26		
51	under cabinets	(Reduced Wattage) ballast HALCO EP132IS/L/MV/HE	6		F	1/28	E	22	0	2,766	365	R		365	
52	Classroom 206	Tandem HALCO EP432IS/L/MV/HE		9	F	4/28	E	84	1	2,038	1,541	R		1,541	
53	Classroom 206	(Reduced Wattage) ballast HALCO EP232IS/L/MV/HE	3		F	2/28	E	42	0	2,038	257	R		257	
54	Classroom 210	Tandem HALCO EP432IS/L/MV/HE		9	F	4/28	E	84	1	2,038	1,541	R		1,541	
55	Classroom 210	(Reduced Wattage) ballast HALCO EP232IS/L/MV/HE	3		F	2/28	E	42	0	2,038	257	R		257	
56	Room 211 Closet	(Reduced Wattage) ballast HALCO EP232IS/L/MV/HE	1		F	2/28	E	42	0	2,038	86	R		86	
57	Classroom 212	Tandem HALCO EP432IS/L/MV/HE		9	F	4/28	E	84	1	2,038	1,541	R		1,541	
58	Classroom 212	(Reduced Wattage) ballast HALCO EP232IS/L/MV/HE	3		F	2/28	E	42	0	2,038	257	R		257	
59	Classroom 213	Tandem HALCO EP432IS/L/MV/HE		9	F	4/28	E	84	1	2,038	1,541	R		1,541	
60	Classroom 213	(Reduced Wattage) ballast HALCO EP232IS/L/MV/HE	3		F	2/28	E	42	0	2,038	257	R		257	
61	Classroom 214	Tandem HALCO EP432IS/L/MV/HE		9	F	4/28	E	84	1	2,038	1,541	R		1,541	
62	Classroom 214	(Reduced Wattage) ballast HALCO EP232IS/L/MV/HE	3		F	2/28	E	42	0	2,038	257	R		257	
63	Girls Restroom	(Reduced Wattage) ballast HALCO EP232IS/L/MV/HE	6		F	2/28	E	42	0	2,766	697	R		697	
64	Girls Restroom	(Reduced Wattage) ballast HALCO EP232IS/L/MV/HE	1		F	2/28	E	42	0	2,766	116	R		116	
65	Mens Restroom	(Reduced Wattage) ballast HALCO EP232IS/L/MV/HE	6		F	2/28	E	42	0	2,766	697	R		697	
66	Mens Restroom	(Reduced Wattage) ballast HALCO EP232IS/L/MV/HE	1		F	2/28	E	42	0	2,766	116	R		116	
67	Gym	HLO High Light Output) with lens and wire guard -	14		F	6/32	E	222	3	2,213	6,877	N	6,877		
68	Stage Entry	(Reduced Wattage) ballast HALCO EP232IS/L/MV/HE	1		F	2/28	E	42	0	2,766	116	R		116	
69	Stage	(Reduced Wattage) ballast, Strip Fixture TX FLOUR	8		F	2/28	E	44	0	2,766	974	N	974		
70	Stage Loft	(Reduced Wattage) ballast HALCO EP232IS/L/MV/HE	2		F	2/28	E	42	0	2,766	232	R		232	
71	Stage Loft	Retrofit, NLO, Strip Kit HALCO EP232IS/N/MV/HE	1		F	2/28	E	48	0	2,766	133	R		133	
72	Stage Storage	Tandem HALCO EP432IS/L/MV/HE		1	F	4/28	E	84	0	2,920	245	R		245	
73	Gym Storage	(Reduced Wattage) ballast HALCO EP232IS/L/MV/HE	3		F	2/28	E	42	0	2,920	368	R		368	
74	Room 304	Tandem HALCO EP432IS/L/MV/HE		3	F	4/28	E	84	0	2,038	514	R		514	

Washington Elementary
Facility name
Rachael Rieken
Form completed by

	Location		Existing Lighting*														
				Quantity										kWh/Yr Adjusted		
Ln. #	Loc. #	Location Name (floor,	Existing Fixture Description/Model	Ind. Wired	Tandem Wired	Lamp Type	Lamp Watts	Ballast Type	Watts/ Unit**	Total kW	Hours/ Yr	kWh/Yr	N,R or A***	Remove Fixture	Retrofit with Kit/Comp.	Remain As Is
75	Washington Elementary	Room 304	F40T12ES 34W, std ballast, Troffer	3		F	2/34	M	72	0.216	2038	440	R		440.208	
76	Washington Elementary	Practice Rm	F40T12, std ballast, Troffer	3		F	4/34	M	147	0.441	2038	899	R		898.758	
77	Washington Elementary	under Counter	F40T12ES 34W, std ballast, Strip	1		F	1/34	M	46	0.046	2038	94	R		93.748	
78	Washington Elementary	Room 304	F40T12ES 34W, std ballast, Surface	16		F	2/34	M	72	1.152	2038	2,348	R		2347.776	
79	Washington Elementary	Room 304	F40T12ES 34W, std ballast, Surface	3		F	2/34	M	72	0.216	2038	440	R		440.208	
80	Washington Elementary	Storage #2	F40T12ES 34W, std ballast, Troffer	1		F	2/34	M	72	0.072	2920	210	R		210.24	
81	Washington Elementary	Storage #2	F40T12ES 34W, std ballast, Troffer	6		F	2/34	M	72	0.432	2920	1,261	R		1261.44	
82	Washington Elementary	Storage #2	F40T12, std ballast, Troffer	2		F	4/34	M	147	0.294	2920	858	R		858.48	
83	Washington Elementary	Kitchen	F40T12ES 34W, std ballast, Wrap	10		F	2/34	M	72	0.72	1822	1,312	R		1311.84	
84	Washington Elementary	Kitchen	F40T12ES 34W, std ballast, Wrap	4		F	2/34	M	72	0.288	1822	525	R		524.736	
85	Washington Elementary	Kitchen Hood	Incandescent 100 watt	2		I	1/100	N/A	100	0.2	1822	364	R		364.4	
86	Washington Elementary	Storage #1	Incandescent 100 watt	1		I	1/100	N/A	100	0.1	2920	292	R		292	
87	Washington Elementary	Loading Dock	Mercury Vapor, 100 watts	2		MV	1/100	M	119	0.238	8760	2,085	N	2084.88		
88	Washington Elementary	Hallway	F40T12ES 34W, std ballast, Wrap	2		F	2/34	M	72	0.144	8760	1,261	R		1261.44	
89	Washington Elementary	Hallway	2x4, 4 lamp, F40T12, std ballast, Surface Mount	32		F	4/34	M	147	4.704	8760	41,207	R		41207.04	
90	Washington Elementary	Hallway Exits	Sign Fixture 2-15 Watt	6		I	2/15	N/A	30	0.18	8760	1,577	N	1576.8		
91	Washington Elementary	Portable 403	F40T12, std ballast, Troffer	8		F	4/34	M	147	1.176	2038	2,397	R		2396.688	
92	Washington Elementary	Portable 404	F40T12, std ballast, Troffer	8		F	4/34	M	147	1.176	2038	2,397	R		2396.688	
93	Washington Elementary	Portable 402	F40T12, std ballast, Troffer	8		F	4/34	M	147	1.176	2038	2,397	R		2396.688	
94	Washington Elementary	Portable 401	F40T12, std ballast, Troffer	8		F	4/34	M	147	1.176	2038	2,397	R		2396.688	
95	Washington Elementary	Portable Exterior	Incandescent 60 watt	2		I	1/60	N/A	60	0.12	4380	526	N	525.6		
96	Washington Elementary	Potable 405/406	F40T12, std ballast, Troffer	10		F	4/34	M	147	1.47	2038	2,996	R		2995.86	
97	Washington Elementary	405/406 Exterior	Incandescent 60 watt	1		I	1/60	N/A	60	0.06	4380	263	N	262.8		
98	Washington Elementary	Playshed	High Pressure Sodium, 150 watts	1		HPS	1/150	M	173	0.173	4380	758	N	757.74		
99	Washington Elementary	Exterior	Mercury Vapor, 100 watts	5		MV	1/100	M	119	0.595	4380	2,606	N	2606.1		

	Location	Proposed Lighting*														
			Quantity									Enter	kWh/Yr Adjusted		
Ln #	Location Name (floor,	Proposed Fixture Description/Model	Ind. Wired	Tandem Wired	Lamp Type	Lamp Watts	Ballast Type	Watts/ Unit	Total kW	Hours/ Yr	kWh/ Yr	N,R or A***	New Fixture	Retro. with kit/comp.	Remain As Is
75	Room 304	(Reduced Wattage) ballast HALCO EP232IS/L/MV/HE	3		F	2/28	E	42	0	2,038	257	R		257	
76	Practice Rm	F28T8/E HALCO EP232IS/N/MV/HE +US	3		F	2/28	E	48	0	2,038	293	R		293	
77	under Counter	(Reduced Wattage) ballast HALCO EP132IS/L/MV/HE	1		F	1/28	E	22	0	2,038	45	R		45	
78	Room 304	(Reduced Wattage) ballast HALCO EP232IS/L/MV/HE	16		F	2/28	E	42	1	2,038	1,370	R		1,370	
79	Room 304	(Reduced Wattage) ballast HALCO EP232IS/L/MV/HE	3		F	2/28	E	42	0	2,038	257	R		257	
80	Storage #2	(Reduced Wattage) ballast HALCO EP232IS/L/MV/HE	1		F	2/28	E	42	0	2,920	123	R		123	
81	Storage #2	Tandem HALCO EP432IS/L/MV/HE		3	F	4/28	E	84	0	2,920	736	R		736	
82	Storage #2	F28T8/E HALCO EP232IS/N/MV/HE +US	2		F	2/28	E	48	0	2,920	280	R		280	
83	Kitchen	Tandem HALCO EP432IS/L/MV/HE		5	F	4/28	E	84	0	1,822	765	R		765	
84	Kitchen	(Reduced Wattage) ballast HALCO EP232IS/L/MV/HE	4		F	2/28	E	42	0	1,822	306	R		306	
85	Kitchen Hood	23watt CFL, Screwin TCP28923	2		CF	1/23		23	0	1,822	84	R		84	
86	Storage #1	23watt CFL, Screwin TCP28923	1		CF	1/23		23	0	2,920	67	R		67	
87	Loading Dock	Electronic, Ceiling Mount 16x16 Incon 12591-213QE-	2		CF	1/26	E	26	0	8,760	456	N	456		
88	Hallway	(Reduced Wattage) ballast HALCO EP232IS/L/MV/HE	2		F	2/28	E	42	0	8,760	736	R		736	
89	Hallway	2x4' EA Troffer Kit , 2 lamp, F28T8/E HALCO EP232IS/N/MV/HE +US	32		F	2/28	E	48	2	8,760	13,455	R		13,455	
90	Hallway Exits	battery , by TCP or equivalent 22745	6		LED	1/		3	0	8,760	158	N	158		
91	Portable 403	F28T8/E HALCO EP232IS/N/MV/HE +US	8		F	2/28	E	48	0	2,038	783	R		783	
92	Portable 404	F28T8/E HALCO EP232IS/N/MV/HE +US	8		F	2/28	E	48	0	2,038	783	R		783	
93	Portable 402	F28T8/E HALCO EP232IS/N/MV/HE +US	8		F	2/28	E	48	0	2,038	783	R		783	
94	Portable 401	F28T8/E HALCO EP232IS/N/MV/HE +US	8		F	2/28	E	48	0	2,038	783	R		783	
95	Portable Exterior	watts - Electronic, Wall Mount Incon 31591-13QE-	2		CF	1/13	E	13	0	4,380	114	N	114		
96	Potable 405/406	F28T8/E HALCO EP232IS/N/MV/HE +US	10		F	2/28	E	48	0	2,038	978	R		978	
97	405/406 Exterior	watts - Electronic, Wall Mount Incon 31591-13QE-	1		CF	1/13	E	13	0	4,380	57	N	57		
98	Playshed	watts - Electronic, Ceiling Mount w/ Trim Plate Incon	1		CF	1/42	E	42	0	4,380	184	N	184		
99	Exterior	Electronic, Ceiling Mount 16x16 Incon 12591-213QE-	3		CF	1/26	E	26	0	4,380	569	N	569		

Washington Elementary
Facility name
Rachael Rieken
Form completed by

Ln. #	Location: Loc. #	Location: Location Name (floor,	Existing Fixture Description/Model	Quantity: Ind. Wired	Quantity: Tandem Wired	Lamp Type	Lamp Watts	Ballast Type	Watts/ Unit**	Total kW	Hours/ Yr	kWh/Yr	N,R or A***	kWh/Yr Adjusted: Remove Fixture	kWh/Yr Adjusted: Retrofit with Kit/Comp.	kWh/Yr Adjusted: Remain As Is
100	Washington Elementary	Exterior	Mercury Vapor, 175 watts	1		MV	1/175	M	197	0.197	4380	863	N	862.86		
101	Washington Elementary	Exterior	High Pressure Sodium, 250 watts	1		HPS	1/250	M	302	0.302	4380	1,323	A			1322.76
102	Washington Elementary	Exterior	F40T12ES 34W, std ballast, Wrap	1		F	2/34	M	72	0.072	4380	315	R		315.36	
TOTAL					**687**					**63.5**		**181,838**				

Ln #	Location: Location Name (floor,	Proposed Fixture Description/Model	Quantity: Ind. Wired	Quantity: Tandem Wired	Lamp Type	Lamp Watts	Ballast Type	Watts/ Unit	Total kW	Hours/ Yr	kWh/ Yr	Enter N,R or A***	kWh/Yr Adjusted: New Fixture	kWh/Yr Adjusted: Retro. with kit/comp.	kWh/Yr Adjusted: Remain As Is
100	Exterior	watts - Electronic, Wallpack Incon 31493B-84TT-41K	1		CF	2/42	E	84	0	4,380	368	N	368		
101	Exterior	High Pressure Sodium, 250 watts	1		HPS	1/250	M	302	0	4,380	1,323	A			1,323
102	Exterior	(Reduced Wattage) ballast HALCO EP232IS/L/MV/HE	1		F	2/28	E	42	0	4,380	184	R		184	
									32.3		**83,861**				

Interior Locations	62.0	175,184	31.7	81,062
Exterior Locations	1.5	6,653	0.6	2,799

		Interior	Exterior
Baseline Total kWh	181,838	175,184	6,653
Baseline Total kW	63.5	62	1.5
Baseline Annual kW	762.1	743.9	18.2

		Interior	Exterior
Proposed Total kWh	83,861	81,062	2,799
Proposed Total kW	32.3	32	0.6
Proposed Annual kW	388.0	380.3	7.7

		Interior	Exterior
Savings kWh	97,977	94,122	3,854
Savings kW	31.2	30.3	0.9
Annual Savings kW	374.1	364	10.6

*** N=New Fixture; R=Retrofit with kit/component; A=As Is

Oakview Elementary
Facility name
Rachael Rieken
Form completed by

	Location			Existing Lighting*											
				Quantity									kWh/Yr Adjusted		
Ln. #	Loc. #	Location Name (floor, room #,	Existing Fixture Description/Model	Ind. Wired	Tandem Wired	Lamp Type	Lamp Watts	Ballast Type	Watts/ Unit**	Hours / Yr	kWh/Yr	N,R or A***	Remove Fixture	Retrofit with Kit/Comp.	Remain As Is
1	Oakview Elementary	Library	2x4, 4 lamp, F40T12, std ballast, Surface Mount Fixture	17		F	4/34	M	147	2766	6,912	R		6912.234	
2	Oakview Elementary	Library	4 foot, 8 lamp, F40T12ES 34W, std ballast, Surface Mnt Fixture	1		F	8/34	M	328	2766	907	R		907.248	
3	Oakview Elementary	Library Storage	4 foot, 2 lamp, F40T12ES 34W, std ballast, Surface Mount	6		F	2/34	M	72	1822	787	R		787.104	
4	Oakview Elementary	Main Office	4 foot, 8 lamp, F40T12ES 34W, std ballast, Surface Mnt Fixture	3		F	8/34	M	328	2766	2,722	R		2721.744	
5	Oakview Elementary	Main Office Cove	4 foot, 1 lamp, F40T12ES 34W, std ballast, Strip	4		F	1/34	M	46	2766	509	R		508.944	
6	Oakview Elementary	Principal's Office	4 foot, 8 lamp, F40T12ES 34W, std ballast, Surface Mnt Fixture	2		F	8/34	M	328	2402	1,576	R		1575.712	
7	Oakview Elementary	Work Room	2x4, 4 lamp, F40T12, std ballast, Surface Mount Fixture	4		F	4/34	M	147	2038	1,198	R		1198.344	
8	Oakview Elementary	Lunch Room	4 foot, 2 lamp, F40T12ES 34W, std ballast, Surface Mount	5		F	2/34	M	72	2766	996	R		995.76	
9	Oakview Elementary	Storage	4 foot, 2 lamp, F40T12ES 34W, std ballast, Surface Mount	2		F	2/34	M	72	1822	262	R		262.368	
10	Oakview Elementary	Storage Room #46	4 foot, 2 lamp, F40T12ES 34W, std ballast, Surface Mount	1		F	2/34	M	72	1822	131	R		131.184	
11	Oakview Elementary	Staff RR	4 foot, 2 lamp, F40T12ES 34W, std ballast, w/ Battery Ballast	2		F	2/34	M	72	8760	1,261	R		1261.44	
12	Oakview Elementary	Staff RR	Incandescent 60 watt	4		I	1/60	N/A	60	2766	664	R		663.84	
13	Oakview Elementary	Boiler Room	Incandescent 150 watt	5		I	1/150	N/A	150	2188	1,641	R		1641	
14	Oakview Elementary	Band Room	4 foot, 2 lamp, F40T12ES 34W, std ballast, Surface Mount	18		F	2/34	M	72	2766	3,585	R		3584.736	
15	Oakview Elementary	Band Room	4 foot, 4 lamp, F40T12, std ballast, Troffer	1		F	4/34	M	147	2766	407	R		406.602	
16	Oakview Elementary	Band Practice	4 foot, 4 lamp, F40T12, std ballast, Troffer	3		F	4/34	M	147	2766	1,220	R		1219.806	
17	Oakview Elementary	Stage	4 foot, 2 lamp, F40T12ES 34W, std ballast, Wrap	12		F	2/34	M	72	2766	2,390	R		2389.824	
18	Oakview Elementary	Stage Office	4 foot, 2 lamp, F40T12ES 34W, std ballast, Wrap	1		F	2/34	M	72	2766	199	R		199.152	
19	Oakview Elementary	Gym Storage	4 foot, 2 lamp, F40T12ES 34W, std ballast, Wrap	4		F	2/34	M	72	1822	525	R		524.736	
20	Oakview Elementary	Stage	Incandescent Exit Sign Fixture 2-15 Watt	1		I	2/15	N/A	30	8760	263	N	262.8		
21	Oakview Elementary	Gym	Metal halide , 400 watts	10		MH	1/400	M	461	2766	12,751	N	12751.26		
22	Oakview Elementary	Gym Entry	Mercury Vapor, 100 watts	1		MV	1/100	M	119	2766	329	N	329.154		
23	Oakview Elementary	Gym storage #2	4 foot, 2 lamp, F40T12ES 34W, std ballast, Surface Mount	1		F	2/34	M	72	1822	131	R		131.184	
24	Oakview Elementary	Gym Paint Storage	4 foot, 2 lamp, F40T12ES 34W, std ballast, Surface Mount	1		F	2/34	M	72	1822	131	R		131.184	
25	Oakview Elementary	Gym Paper Storage	4 foot, 2 lamp, F40T12ES 34W, std ballast, Surface Mount	4		F	2/34	M	72	1822	525	R		524.736	
26	Oakview Elementary	Gym storage #3	Incandescent 100 watt	2		I	1/100	N/A	100	1822	364	N	364.4		
27	Oakview Elementary	Kitchen Storage #1	4 foot, 2 lamp, F40T12ES 34W, std ballast, Surface Mount	2		F	2/34	M	72	1822	262	R		262.368	
28	Oakview Elementary	Kitchen Storage #2	Incandescent 150 watt	1		I	1/150	N/A	150	1822	273	N	273.3		
29	Oakview Elementary	Kitchen Storage #2	4 foot, 2 lamp, F40T12ES 34W, std ballast, Surface Mount	8		F	2/34	M	72	1822	1,049	R		1049.472	
30	Oakview Elementary	Kitchen Storage #2	4 foot, 2 lamp, F40T12ES 34W, std ballast, Surface Mount	2		F	2/34	M	72	1822	262	R		262.368	

	Location			Proposed Lighting*													
				Quantity										Enter	kWh/Yr Adjusted		
Ln #	Loc. #	Location Name (floor, room #, etc.)	Proposed Fixture Description/Model	Ind. Wired	Tandem Wired	Lamp Type	Lamp Watts	Ballast Type	Watts/ Unit	Total kW	Hours/ Yr	kWh/ Yr	Adjmt. Factor	N,R or A***	New Fixture	Retro. with kit/comp.	Remain As Is
1	Oakview Elementary	Library	F28T8/E HALCO EP232IS/N/MV/HE +US	17		F	2/28	E	48	1	2,766	2,257	1	R		2,257	
2	Oakview Elementary	Library	F28T8/E HALCO (2) EP232IS/N/MV/HE +US	1		F	4/28	E	96	0	2,766	266	1	R		266	
3	Oakview Elementary	Library Storage	Tandem HALCO EP432IS/L/MV/HE		3	F	4/28	E	84	0	1,822	459	1	R		459	
4	Oakview Elementary	Main Office	F28T8/E HALCO (2) EP232IS/N/MV/HE +US	3		F	4/28	E	96	0	2,766	797	1	R		797	
5	Oakview Elementary	Main Office Cove	(Reduced Wattage) ballast HALCO EP232IS/L/MV/HE		2	F	2/28	E	42	0	2,766	232	1	R		232	
6	Oakview Elementary	Principal's Office	F28T8/E HALCO (2) EP232IS/N/MV/HE +US	2		F	4/28	E	96	0	2,402	461	1	R		461	
7	Oakview Elementary	Work Room	Tandem HALCO EP432IS/L/MV/HE		2	F	4/28	E	84	0	2,038	342	1	R		342	
8	Oakview Elementary	Lunch Room	F28T8/E HALCO EP232IS/N/MV/HE +US	5		F	2/28	E	48	0	2,766	664	1	R		664	
9	Oakview Elementary	Storage	Tandem HALCO EP432IS/L/MV/HE		1	F	4/28	E	84	0	1,822	153	1	R		153	
10	Oakview Elementary	Storage Room #46	(Reduced Wattage) ballast HALCO EP232IS/L/MV/HE	1		F	2/28	E	42	0	1,822	77	1	R		77	
11	Oakview Elementary	Staff RR	(Reduced Wattage) ballast with Battery Ballast HALCO	2		F	2/28	E	42	0	8,760	736	1	R		736	
12	Oakview Elementary	Staff RR	F17T8/E. TX FLOUR 555A117MV	2		F	1/17	E	20	0	2,766	111	1	R		111	
13	Oakview Elementary	Boiler Room	32 watt Screw In, TCP 28932	6		CF	1/32	E	32	0	2,188	350	1	R		350	
14	Oakview Elementary	Band Room	Tandem HALCO EP432IS/L/MV/HE		9	F	4/28	E	84	1	2,766	2,091	1	R		2,091	
15	Oakview Elementary	Band Room	F28T8/E HALCO EP232IS/N/MV/HE +US	4		F	2/28	E	48	0	2,766	133	1	R		133	
16	Oakview Elementary	Band Practice	F28T8/E HALCO EP232IS/N/MV/HE +US	3		F	2/28	E	48	0	2,766	398	1	R		398	
17	Oakview Elementary	Stage	Tandem HALCO EP432IS/L/MV/HE		6	F	4/28	E	84	1	2,766	1,394	1	R		1,394	
18	Oakview Elementary	Stage Office	(Reduced Wattage) ballast HALCO EP232IS/L/MV/HE	1		F	2/28	E	42	0	2,766	116	1	R		116	
19	Oakview Elementary	Gym Storage	(Reduced Wattage) ballast HALCO EP232IS/L/MV/HE	4		F	2/28	E	42	0	1,822	306	1	R		306	
20	Oakview Elementary	Stage	New LED Exit Sign, by TCP or equivalent	1		LED	1/		3	0	8,760	26	1	N	26		
21	Oakview Elementary	Gym	High Light Output) with lens and wire guard -COOPER HBI-632	10		F	4/32	E	222	2	2,766	6,141	1	N	6,141		
22	Oakview Elementary	Gym Entry	F28T8/E, RW (Reduced Wattage) ballast TX FLOUR	1		F	2/28	E	42	0	2,766	116	1	N	116		
23	Oakview Elementary	Gym storage #2	(Reduced Wattage) ballast HALCO EP232IS/L/MV/HE	1		F	2/28	E	42	0	1,822	77	1	R		77	
24	Oakview Elementary	Gym Paint Storage	(Reduced Wattage) ballast HALCO EP232IS/L/MV/HE	1		F	2/28	E	42	0	1,822	77	1	R		77	
25	Oakview Elementary	Gym Paper Storage	(Reduced Wattage) ballast HALCO EP232IS/L/MV/HE	4		F	2/28	E	42	0	1,822	306	1	R		306	
26	Oakview Elementary	Gym storage #3	F28T8/E, RW (Reduced Wattage) ballast TX FLOUR	2		F	2/28	E	42	0	1,822	153	1	N	153		
27	Oakview Elementary	Kitchen Storage #1	(Reduced Wattage) ballast HALCO EP232IS/L/MV/HE	2		F	2/28	E	42	0	1,822	153	1	R		153	
28	Oakview Elementary	Kitchen Storage #2	Electronic, Drum INCON 11111-13QE-41K	1		CF	1/13	E	13	0	1,822	24	1	N	24		
29	Oakview Elementary	Kitchen Storage #2	Tandem HALCO EP432IS/L/MV/HE		4	F	4/28	E	84	0	1,822	612	1	R		612	
30	Oakview Elementary	Kitchen Storage #2	(Reduced Wattage) ballast HALCO EP232IS/L/MV/HE	2		F	2/28	E	42	0	1,822	153	1	R		153	

Oakview Elementary
Facility name
Rachael Rieken
Form completed by

	Location		Existing Lighting*													
				Quantity									kWh/Yr Adjusted		
Ln. #	Loc. #	Location Name (floor, room #,	Existing Fixture Description/Model	Ind. Wired	Tandem Wired	Lamp Type	Lamp Watts	Ballast Type	Watts/ Unit**	Hours / Yr	kWh/Yr	N,R or A***	Remove Fixture	Retrofit with Kit/Comp.	Remain As Is
31	Oakview Elementary	Classroom 37	4 foot, 2 lamp, F40T12ES 34W, std ballast, Wrap	18		F	2/34	M	72	2038	2,641	R		2641.248	
32	Oakview Elementary	Classroom 37	4 foot, 2 lamp, F40T12ES 34W, std ballast, Wrap	2		F	2/34	M	72	2038	293	R		293.472	
33	Oakview Elementary	Office #38	4 foot, 2 lamp, F40T12ES 34W, std ballast, Surface Mount		4	F	2/34	M	72	2402	692	R		691.776	
34	Oakview Elementary	Office #38	4 foot, 2 lamp, F40T12ES 34W, std ballast, Surface Mount	1		F	2/34	M	72	2402	173	R		172.944	
35	Oakview Elementary	Nurse	4 foot, 2 lamp, F40T12ES 34W, std ballast, Surface Mount	2		F	2/34	M	72	2766	398	R		398.304	
36	Oakview Elementary	Nurse Closet	Incandescent 60 watt	1		I	1/60	N/A	60	1822	109	N	109.32		
37	Oakview Elementary	Nurse RR	Incandescent 60 watt	1		I	1/60	N/A	60	2766	166	N	165.96		
38	Oakview Elementary	Electrical Room	Incandescent 150 watt	1		I	1/150	N/A	150	2188	328	N	328.2		
39	Oakview Elementary	Classroom 53	4 foot, 2 lamp, F40T12ES 34W, std ballast, Wrap	18		F	2/34	M	72	2038	2,641	R		2641.248	
40	Oakview Elementary	Classroom 53	4 foot, 2 lamp, F40T12ES 34W, std ballast, Wrap	3		F	2/34	M	72	2038	440	R		440.208	
41	Oakview Elementary	Classroom 41	4 foot, 2 lamp, F40T12ES 34W, std ballast, Wrap	18		F	2/34	M	72	2038	2,641	R		2641.248	
42	Oakview Elementary	Classroom 41	4 foot, 2 lamp, F40T12ES 34W, std ballast, Wrap	3		F	2/34	M	72	2038	440	R		440.208	
43	Oakview Elementary	Storage Room #54	4 foot, 2 lamp, F40T12ES 34W, std ballast, Surface Mount	2		F	2/34	M	72	1822	262	R		262.368	
44	Oakview Elementary	Storage Room #42	4 foot, 2 lamp, F40T12ES 34W, std ballast, Surface Mount	2		F	2/34	M	72	1822	262	R		262.368	
45	Oakview Elementary	Classroom 55	4 foot, 2 lamp, F40T12ES 34W, std ballast, Surface Mount	18		F	2/34	M	72	2038	2,641	R		2641.248	
46	Oakview Elementary	Classroom 55	4 foot, 2 lamp, F40T12ES 34W, std ballast, Surface Mount	3		F	2/34	M	72	2038	440	R		440.208	
47	Oakview Elementary	Classrom 43	4 foot, 2 lamp, F40T12ES 34W, std ballast, Surface Mount	18		F	2/34	M	72	2038	2,641	R		2641.248	
48	Oakview Elementary	Classrom 43	4 foot, 2 lamp, F40T12ES 34W, std ballast, Surface Mount	3		F	2/34	M	72	2038	440	R		440.208	
49	Oakview Elementary	Classroom 57	4 foot, 2 lamp, F40T12ES 34W, std ballast, Troffer Fixture	18		F	2/34	M	72	2038	2,641	R		2641.248	
50	Oakview Elementary	Classroom 45	4 foot, 2 lamp, F40T12ES 34W, std ballast, Troffer Fixture	18		F	2/34	M	72	2038	2,641	R		2641.248	
51	Oakview Elementary	Boys Restroom	4 foot, 2 lamp, F40T12ES 34W, std ballast, Surface Mount	5		F	2/34	M	72	2766	996	R		995.76	
52	Oakview Elementary	Girls Restroom	4 foot, 2 lamp, F40T12ES 34W, std ballast, Surface Mount	5		F	2/34	M	72	2766	996	R		995.76	
53	Oakview Elementary	Main Hall	2x4, 4 lamp, F40T12, std ballast, Surface Mount Fixture	14		F	4/34	M	147	8760	18,028	R		18028.08	
54	Oakview Elementary	Main Hall	2 lamp, 4', F32T8 Electronic ballast	3		F	2/32	E	60	8760	1,577	R		1576.8	
55	Oakview Elementary	Main Hall	4 foot, 8 lamp, F40T12ES 34W, std ballast, Surface Mnt Fixture	3		F	8/34	M	328	8760	8,620	R		8619.84	
56	Oakview Elementary	Main Hall Case Lighting	2 foot, 2 lamp, F20T12, std ballast	5		F	2/20	M	50	8760	2,190	N	2190		
57	Oakview Elementary	Main Hall Case Lighting	4 foot, 1 lamp, F40T12ES 34W, std ballast, Strip	1		F	2/34	M	46	8760	403	N	402.96		
58	Oakview Elementary	Exterior	Metal halide , 100 watts	2		MH	1/100	M	142	4380	1,244	N	1243.92		
59	Oakview Elementary	Exterior	High Pressure Sodium, 70 watts	2		HPS	1/70	M	95	4380	832	N	832.2		
60	Oakview Elementary	Exterior	High Pressure Sodium, 70 watts	2		HPS	1/70	M	95	4380	832	N	832.2		

	Location		Proposed Lighting*													
				Quantity										Enter	kWh/Yr Adjusted		
Ln #	Loc. #	Location Name (floor, room #, etc.)	Proposed Fixture Description/Model	Ind. Wired	Tandem Wired	Lamp Type	Lamp Watts	Ballast Type	Watts/ Unit	Total kW	Hours/ Yr	kWh/ Yr	Adjmt. Factor	N,R or A***	New Fixture	Retro. with kit/comp.	Remain As Is
31	Oakview Elementary	Classroom 37	Tandem HALCO EP432IS/L/MV/HE		9	F	4/28	E	84	1	2,038	1,541	1	R		1,541	
32	Oakview Elementary	Classroom 37	(Reduced Wattage) ballast HALCO EP232IS/L/MV/HE	3		F	2/28	E	42	0	2,038	171	1	R		171	
33	Oakview Elementary	Office #38	Tandem HALCO EP432IS/L/MV/HE	3		F	4/28	E	84	0	2,402	404	1	R		404	
34	Oakview Elementary	Office #38	(Reduced Wattage) ballast HALCO EP232IS/L/MV/HE	2		F	2/28	E	42	0	2,402	101	1	R		101	
35	Oakview Elementary	Nurse	(Reduced Wattage) ballast HALCO EP232IS/L/MV/HE	2		F	2/28	E	42	0	2,766	232	1	R		232	
36	Oakview Elementary	Nurse Closet	Electronic, Drum INCON 11111-13QE-41K	1		CF	1/13	E	13	0	1,822	24	1	N	24		
37	Oakview Elementary	Nurse RR	Electronic, Drum INCON 11111-13QE-41K	1		CF	1/13	E	13	0	2,766	36	1	N	36		
38	Oakview Elementary	Electrical Room	Wattage) ballast, Strip Fixture TX Flour S1328LOWMV	1		F	2/28	E	42	0	2,188	92	1	N	92		
39	Oakview Elementary	Classroom 53	Tandem HALCO EP432IS/L/MV/HE		9	F	4/28	E	84	1	2,038	1,541	1	R		1,541	
40	Oakview Elementary	Classroom 53	(Reduced Wattage) ballast HALCO EP232IS/L/MV/HE	3		F	2/28	E	42	0	2,038	257	1	R		257	
41	Oakview Elementary	Classroom 41	Tandem HALCO EP432IS/L/MV/HE		9	F	4/28	E	84	1	2,038	1,541	1	R		1,541	
42	Oakview Elementary	Classroom 41	(Reduced Wattage) ballast HALCO EP232IS/L/MV/HE	3		F	2/28	E	42	0	2,038	257	1	R		257	
43	Oakview Elementary	Storage Room #54	Tandem HALCO EP432IS/L/MV/HE		1	F	4/28	E	84	0	1,822	153	1	R		153	
44	Oakview Elementary	Storage Room #42	Tandem HALCO EP432IS/L/MV/HE		1	F	4/28	E	84	0	1,822	153	1	R		153	
45	Oakview Elementary	Classroom 55	Tandem HALCO EP432IS/L/MV/HE		9	F	4/28	E	84	1	2,038	1,541	1	R		1,541	
46	Oakview Elementary	Classroom 55	(Reduced Wattage) ballast HALCO EP232IS/L/MV/HE	3		F	2/28	E	42	0	2,038	257	1	R		257	
47	Oakview Elementary	Classrom 43	Tandem HALCO EP432IS/L/MV/HE		9	F	4/28	E	84	1	2,038	1,541	1	R		1,541	
48	Oakview Elementary	Classrom 43	(Reduced Wattage) ballast HALCO EP232IS/L/MV/HE	3		F	2/28	E	42	0	2,038	257	1	R		257	
49	Oakview Elementary	Classroom 57	Tandem HALCO EP432IS/L/MV/HE		18	F	4/28	E	84	1	2,038	1,541	1	R		1,541	
50	Oakview Elementary	Classroom 45	Tandem HALCO EP432IS/L/MV/HE		18	F	4/28	E	84	1	2,038	1,541	1	R		1,541	
51	Oakview Elementary	Boys Restroom	(Reduced Wattage) ballast HALCO EP232IS/L/MV/HE	5		F	2/28	E	42	0	2,766	581	1	R		581	
52	Oakview Elementary	Girls Restroom	(Reduced Wattage) ballast HALCO EP232IS/L/MV/HE	5		F	2/28	E	42	0	2,766	581	1	R		581	
53	Oakview Elementary	Main Hall	F28T8/E HALCO EP232IS/N/MV/HE +US	14		F	2/28	E	48	1	8,760	5,887	1	R		5,887	
54	Oakview Elementary	Main Hall	4', 2 lamp, F28T8/E Relamp Only	3		F	2/28	E	42	0	8,760	1,104	1	R		1,104	
55	Oakview Elementary	Main Hall	F28T8/E HALCO (2) EP232IS/N/MV/HE +US	3		F	4/28	E	96	0	8,760	2,523	1	R		2,523	
56	Oakview Elementary	Main Hall Case Lighting	2', New Strip Fixture 2 lamp, F17T8/E, TX FLOUR C217MV	5		F	2/17	E	34	0	8,760	1,489	1	N	1,489		
57	Oakview Elementary	Main Hall Case Lighting	Wattage) ballast, Strip Fixture TX Flour S1328LOWMV	1		F	2/28	E	42	0	8,760	368	1	N	368		
58	Oakview Elementary	Exterior	Electronic, Ceiling Mount 16x16 INCON 12591-213QE-41K	2		CF	1/26	E	26	0	4,380	228	1	N	228		
59	Oakview Elementary	Exterior	Modular with reflector and dedicated base 1-26w, HPF, low	2		CF	1/26	M	26	0	4,380	228	1	N	228		
60	Oakview Elementary	Exterior	Electronic, Wall Mount INCON 32591-26QE-41K	2		CF	1/26	E	26	0	4,380	228	1	N	228		

Oakview Elementary
Facility name
Rachael Rieken
Form completed by

	Location			Existing Lighting*											
				Quantity									kWh/Yr Adjusted		
Ln. #	Loc. #	Location Name (floor, room #,	Existing Fixture Description/Model	Ind. Wired	Tandem Wired	Lamp Type	Lamp Watts	Ballast Type	Watts/ Unit**	Hours / Yr	kWh/Yr	N,R or A***	Remove Fixture	Retrofit with Kit/Comp.	Remain As Is
61	Oakview Elementary	Exterior	High Pressure Sodium, 50 watts	6		HPS	1/50	M	61	4380	1,603	N	1603.08		
62	Oakview Elementary	Portable A1	4 foot, 4 lamp, F40T12, std ballast, Troffer	8		F	4/34	M	147	2038	2,397	R		2396.688	
63	Oakview Elementary	Portable A2	4 foot, 4 lamp, F40T12, std ballast, Troffer	8		F	4/34	M	147	2038	2,397	R		2396.688	
64	Oakview Elementary	Exterior Front	Metal halide , 100 watts	1		MH	1/100	M	142	4380	622	N	621.96		
TOTAL					**347**						**109,904**				

	Location			Proposed Lighting*														
				Quantity										kWh/Yr Adjusted		
Ln #	Loc. #	Location Name (floor, room #, etc.)	Proposed Fixture Description/Model	Ind. Wired	Tandem Wired	Lamp Type	Lamp Watts	Ballast Type	Watts/ Unit	Total kW	Hours/ Yr	kWh/ Yr	Adjmt. Factor	Enter N,R or A***	New Fixture	Retro. with kit/comp.	Remain As Is
61	Oakview Elementary	Exterior	Electronic, Wall Mount INCON 32591-26QE-41K	6		CF	1/26	E	26	0	4,380	683	1	N	683		
62	Oakview Elementary	Portable A1	F28T8/E HALCO EP232IS/N/MV/HE +US	8		F	2/28	E	48	0	2,038	783	1	R		783	
63	Oakview Elementary	Portable A2	F28T8/E HALCO EP232IS/N/MV/HE +US	8		F	2/28	E	48	0	2,038	783	1	R		783	
64	Oakview Elementary	Exterior Front	Electronic, Ceiling Mount 16x16 INCON 12591-213QE-41K	1		CF	1/26	E	26	0	4,380	114	1	N	114		
TOTAL										**16.6**		**47,936**					

Interior Locations	104,771	16.2 / 46,455
Exterior Locations	5,133	0.3 / 1,480

		Interior	Exterior
Baseline Total kWh	109,904	104,771	5,133
Baseline Total kW	35.8	35	1.2
Baseline Annual kW	429.6	415.5	14.1

		Interior	Exterior
Proposed Total kWh	47,936	46,455	1,480
Proposed Total kW	16.6	16	0.3
Proposed Annual kW	198.7	194.7	4.1

		Interior	Exterior
Savings kWh	61,969	58,316	3,653
Savings kW	19.2	18.4	0.8
Annual Savings kW	230.9	221	10.0

*** N=New Fixture; R=Retrofit with kit/component; A=As Is

Fords Prairie Elementary
Facility name

Rachael Rieken
Form completed by

	Location			Existing Lighting*														Location		Proposed Lighting*													
				Quantity										kWh/Yr Adjusted						Quantity									Enter	kWh/Yr Adjusted		
Ln. #	Loc. #	Location Name (floor, room #, etc.)	Existing Fixture Description/Model	Ind. Wired	Tandem Wired	Lamp Type	Lamp Watts	Ballast Type	Watts/ Unit**	Total kW	Hours/ Yr	kWh/Yr	N,R or A***	Remove Fixture	Retrofit with Kit/Comp.	Remain As Is	Ln #	Location Name (floor, room #, etc.)	Proposed Fixture Description/Model	Ind. Wired	Tandem Wired	Lamp Type	Lamp Watts	Ballast Type	Watts/ Unit	Total kW	Hours/ Yr	kWh/ Yr	N,R or A***	New Fixture	Retro. with kit/comp.	Remain As Is
1	Fords Prairie Elementary	Main Office	4 foot, 2 lamp, F40T12ES 34W, std ballast, Wrap	2		F	2/34	M	72	0.144	2766	398	R		398.304		1	Main Office	8', 4 lamp, F28T8/E RLO Tandem HALCO EP432IS/L/MV/HE		1	F	4/28	E	84	0	2,766	232	R		232	
2	Fords Prairie Elementary	Pricipal's Office	2x4, 4 lamp, F40T12, std ballast, Surface Mount Fixture	4		F	4/34	M	147	0.588	2402	1,412	R		1412.376		2	Pricipal's Office	2x4' EA Troffer Kit , 2 lamp, F28T8/E HALCO EP232IS/N/MV/HE +US ENERGY KTC-02B04-WA	4		F	2/28	E	48	0	2,402	461	R		461	
3	Fords Prairie Elementary	Teacher Lounge	2x4, 4 lamp, F40T12, std ballast, Surface Mount Fixture	4		F	4/34	M	147	0.588	2916	1,715	R		1714.608		3	Teacher Lounge	2x4' EA Troffer Kit , 2 lamp, F28T8/E HALCO EP232IS/N/MV/HE +US ENERGY KTC-02B04-WA	4		F	2/28	E	48	0	2,916	560	R		560	
4	Fords Prairie Elementary	Health Room	4 foot, 2 lamp, F40T12ES 34W, std ballast, Surface Mount	2		F	2/34	M	72	0.144	2916	420	R		419.904		4	Health Room	4', 2 lamp, F28T8/E RW (Reduced Wattage) ballast HALCO EP232IS/L/MV/HE	2		F	2/28	E	42	0	2,916	245	R		245	
5	Fords Prairie Elementary	Restroom	4 foot, 4 lamp, F40T12, std ballast, Wrap	1		F	4/34	M	147	0.147	2916	429	R		428.652		5	Restroom	4', 2 lamp, F28T8/E RW (Reduced Wattage) ballast HALCO EP232IS/L/MV/HE	1		F	2/28	E	42	0	2,916	122	R		122	
6	Fords Prairie Elementary	Student Support	4 foot, 2 lamp, F40T12ES 34W, std ballast, Surface Mount	10		F	2/34	M	72	0.72	2916	2,100	R		2099.52		6	Student Support	8', 4 lamp, F28T8/E RLO Tandem HALCO EP432IS/L/MV/HE		5	F	4/28	E	84	0	2,916	1,225	R		1,225	
7	Fords Prairie Elementary	Student Support	4 foot, 2 lamp, F40T12ES 34W, std ballast, Surface Mount	4		F	2/34	M	72	0.288	2916	840	R		839.808		7	Student Support	4', 2 lamp, F28T8/E RW (Reduced Wattage) ballast HALCO EP232IS/L/MV/HE	4		F	2/28	E	42	0	2,916	490	R		490	
8	Fords Prairie Elementary	Student Support	2x4, 4 lamp, F40T12, std ballast, Surface Mount Fixture	2		F	4/34	M	147	0.294	2916	857	R		857.304		8	Student Support	2x4' EA Troffer Kit , 2 lamp, F28T8/E HALCO EP232IS/N/MV/HE +US ENERGY KTC-02B04-WA	2		F	2/28	E	48	0	2,916	280	R		280	
9	Fords Prairie Elementary	Counselor's Office	4 foot, 2 lamp, F40T12ES 34W, std ballast, Surface Mount	4		F	2/34	M	72	0.288	2766	797	R		796.608		9	Counselor's Office	4', 2 lamp, F28T8/E RW (Reduced Wattage) ballast HALCO EP232IS/L/MV/HE		2	F	2/28	E	42	0	2,766	232	R		232	
10	Fords Prairie Elementary	Gym	2x4, 4 lamp, F40T12, std ballast, Surface Mount Fixture	15		F	4/34	M	147	2.205	2766	6,099	R		6099.03		10	Gym	8', 4 lamp, F28T8/E RLO Tandem HALCO EP432IS/L/MV/HE	15		F	4/28	E	84	1	2,766	3,485	R		3,485	
11	Fords Prairie Elementary	Kitchen	2x4, 4 lamp, F40T12, std ballast, Surface Mount Fixture	4		F	4/34	M	147	0.588	1822	1,071	R		1071.336		11	Kitchen	8', 4 lamp, F28T8/E RLO Tandem HALCO EP432IS/L/MV/HE	4		F	4/28	E	84	0	1,822	612	R		612	
12	Fords Prairie Elementary	Kitchen	4 foot, 2 lamp, F40T12ES 34W, std ballast, Wrap	1		F	2/34	M	72	0.072	1822	131	R		131.184		12	Kitchen	4', 2 lamp, F28T8/E RW (Reduced Wattage) ballast HALCO EP232IS/L/MV/HE	1		F	2/28	E	42	0	1,822	77	R		77	
13	Fords Prairie Elementary	Kitchen RR	Incandescent 60 watt	1		I	1/60	N/A	60	0.06	2916	175	N	174.96			13	Kitchen RR	New CFL Fixture, 1-13 watts - Electronic, Drum INCON 11111-13QE-41K	1		CF	1/13	E	13	0	2,916	38	N	38		
14	Fords Prairie Elementary	Kitchen Storage	Incandescent 60 watt	1		I	1/60	N/A	60	0.06	2920	175	N	175.2			14	Kitchen Storage	New CFL Fixture, 1-13 watts - Electronic, Drum INCON 11111-13QE-41K	1		CF	1/13	E	13	0	2,920	38	N	38		
15	Fords Prairie Elementary	Gym Storage	Incandescent 100 watt	1		I	1/100	N/A	100	0.1	2920	292	N	292			15	Gym Storage	4', 1 lamp F28T8/E RW (Reduced Wattage) ballast, Strip Fixture TX FLOUR S132LOWMV	1		F	1/28	E	22	0	2,920	64	N	64		

Fords Prairie Elementary
Facility name

Rachael Rieken
Form completed by

	Location		Existing Lighting*															Location	Proposed Lighting*														
				Quantity										kWh/Yr Adjusted						Quantity									Enter	kWh/Yr Adjusted		
Ln. #	Loc. #	Location Name (floor, room #, etc.)	Existing Fixture Description/Model	Ind. Wired	Tandem Wired	Lamp Type	Lamp Watts	Ballast Type	Watts/ Unit**	Total kW	Hours/ Yr	kWh/Yr	N,R or A***	Remove Fixture	Retrofit with Kit/Comp.	Remain As Is	Ln #	Location Name (floor, room #, etc.)	Proposed Fixture Description/Model	Ind. Wired	Tandem Wired	Lamp Type	Lamp Watts	Ballast Type	Watts/ Unit	Total kW	Hours/ Yr	kWh/ Yr	N,R or A***	New Fixture	Retro. with kit/comp.	Remain As Is
16	Fords Prairie Elementary	Storage by Classroom 6	4 foot, 2 lamp, F40T12ES 34W, std ballast, Surface Mount	2		F	2/34	M	72	0.144	2920	420	R		420.48		16	Storage by Classroom 6	8', 4 lamp, F28T8/E RLO Tandem HALCO EP432IS/L/MV/HE		1	F	4/28	E	84	0	2,920	245	R		245	
17	Fords Prairie Elementary	Storage by Classroom 6	4 foot, 2 lamp, F40T12ES 34W, std ballast, Surface Mount	1		F	2/34	M	72	0.072	2920	210	R		210.24		17	Storage by Classroom 6	4', 2 lamp, F28T8/E RW (Reduced Wattage) ballast HALCO EP232IS/L/MV/HE	1		F	2/28	E	42	0	2,920	123	R		123	
18	Fords Prairie Elementary	Classrooms 1-6 A & B	4 foot, 4 lamp, F40T12, std ballast, Troffer	88		F	4/34	M	147	12.936	2038	26,364	R		26363.568		18	Classrooms 1-6 A & B	2x4' EA Troffer Kit , 2 lamp, F28T8/E HALCO EP232IS/N/MV/HE +US ENERGY KTC-02B04-WA	88		F	2/28	E	48	4	2,038	8,609	R		8,609	
19	Fords Prairie Elementary	Classrooms 1-6 A & B	4 foot, 1 lamp, F40T12ES 34W, std ballast, Strip	48		F	1/34	M	46	2.208	2038	4,500	R		4499.904		19	Classrooms 1-6 A & B	4', 2 lamp, F28T8/E RW (Reduced Wattage) ballast Tandem Wired HALCO EP232IS/L/MV/HE		24	F	2/28	E	42	1	2,038	2,054	R		2,054	
20	Fords Prairie Elementary	Classrooms 2, 5, & 6	4 foot, 8 lamp, F40T12ES 34W, std ballast, Surface Mnt Fixture	3		F	8/34	M	328	0.984	2038	2,005	R		2005.392		20	Classrooms 2, 5, & 6	2 - 2x4' EA Troffer Kit , 2 lamp, F28T8/E HALCO (2) EP232IS/N/MV/HE +US ENERGY (2) KTC-02B04-WA	3		F	4/28	E	96	0	2,038	587	R		587	
21	Fords Prairie Elementary	Classroom 3	4 foot, 2 lamp, F40T12ES 34W, std ballast, Wrap	2		F	2/34	M	72	0.144	2038	293	R		293.472		21	Classroom 3	4', 2 lamp, F28T8/E RW (Reduced Wattage) ballast HALCO EP232IS/L/MV/HE	2		F	2/28	E	42	0	2,038	171	R		171	
22	Fords Prairie Elementary	Custodian	4 foot, 2 lamp, F40T12ES 34W, std ballast, Surface Mount	2		F	2/34	M	72	0.144	2188	315	R		315.072		22	Custodian	8', 4 lamp, F28T8/E RLO Tandem HALCO EP432IS/L/MV/HE		1	F	4/28	E	84	0	2,188	184	R		184	
23	Fords Prairie Elementary	Custodian	4 foot, 2 lamp, F40T12ES 34W, std ballast, Surface Mount	1		F	2/34	M	72	0.072	2188	158	R		157.536		23	Custodian	4', 2 lamp, F28T8/E RW (Reduced Wattage) ballast with Battery Ballast HALCO EP232IS/L/MV/HE+ BATTERY	1		F	2/28	E	42	0	2,188	92	R		92	
24	Fords Prairie Elementary	Girls Restroom	4 foot, 2 lamp, F40T12ES 34W, std ballast, Surface Mount	2		F	2/34	M	72	0.144	2916	420	R		419.904		24	Girls Restroom	8', 4 lamp, F28T8/E RLO Tandem HALCO EP432IS/L/MV/HE		1	F	4/28	E	84	0	2,916	245	R		245	
25	Fords Prairie Elementary	Girls Restroom	4 foot, 2 lamp, F40T12ES 34W, std ballast, Surface Mount	1		F	2/34	M	72	0.072	2916	210	R		209.952		25	Girls Restroom	4', 2 lamp, F28T8/E RW (Reduced Wattage) ballast HALCO EP232IS/L/MV/HE	1		F	2/28	E	42	0	2,916	122	R		122	
26	Fords Prairie Elementary	Girls Restroom	4 foot, 2 lamp, F40T12ES 34W, std ballast, w/ Battery Ballast	1		F	2/34	M	72	0.072	8760	631	R		630.72		26	Girls Restroom	4', 2 lamp, F28T8/E RW (Reduced Wattage) ballast with Battery Ballast HALCO EP232IS/L/MV/HE+ BATTERY	1		F	2/28	E	42	0	8,760	368	R		368	
27	Fords Prairie Elementary	Boys Restroom	4 foot, 2 lamp, F40T12ES 34W, std ballast, Surface Mount	2		F	2/34	M	72	0.144	2916	420	R		419.904		27	Boys Restroom	8', 4 lamp, F28T8/E RLO Tandem HALCO EP432IS/L/MV/HE		1	F	4/28	E	84	0	2,916	245	R		245	
28	Fords Prairie Elementary	Boys Restroom	4 foot, 2 lamp, F40T12ES 34W, std ballast, w/ Battery Ballast	1		F	2/34	M	72	0.072	8760	631	R		630.72		28	Boys Restroom	4', 2 lamp, F28T8/E RW (Reduced Wattage) ballast with Battery Ballast HALCO EP232IS/L/MV/HE+ BATTERY	1		F	2/28	E	42	0	8,760	368	R		368	

Fords Prairie Elementary
Facility name

Rachael Rieken
Form completed by

	Location		Existing Lighting*																Location	Proposed Lighting*														
				Quantity										kWh/Yr Adjusted							Quantity								Enter	kWh/Yr Adjusted		
Ln. #	Loc. #	Location Name (floor, room #, etc.)	Existing Fixture Description/Model	Ind. Wired	Tandem Wired	Lamp Type	Lamp Watts	Ballast Type	Watts/ Unit**	Total kW	Hours/ Yr	kWh/Yr	N,R or A***	Remove Fixture	Retrofit with Kit/Comp.	Remain As Is	Ln #	Location Name (floor, room #, etc.)	Proposed Fixture Description/Model	Ind. Wired	Tandem Wired	Lamp Type	Lamp Watts	Ballast Type	Watts/ Unit	Total kW	Hours/ Yr	kWh/ Yr	N,R or A***	New Fixture	Retro. with kit/comp.	Remain As Is
29	Fords Prairie Elementary	Boys Restroom	4 foot, 2 lamp, F40T12ES 34W, std ballast, Surface Mount	1		F	2/34	M	72	0.072	2916	210	R		209.952		29	Boys Restroom	4', 2 lamp, F28T8/E RW (Reduced Wattage) ballast HALCO EP232IS/L/MV/HE	1		F	2/28	E	42	0	2,916	122	R		122	
30	Fords Prairie Elementary	Reading Room	4 foot, 8 lamp, F40T12ES 34W, std ballast, Surface Mnt Fixture	2		F	8/34	M	328	0.656	2916	1,913	R		1912.896		30	Reading Room	2 - 2x4' EA Troffer Kit , 2 lamp, F28T8/E HALCO (2) EP232IS/N/MV/HE +US ENERGY (2) KTC-02B04-WA	2		F	4/28	E	96	0	2,916	560	R		560	
31	Fords Prairie Elementary	Speech Room	4 foot, 8 lamp, F40T12ES 34W, std ballast, Surface Mnt Fixture	2		F	8/34	M	328	0.656	2038	1,337	R		1336.928		31	Speech Room	2 - 2x4' EA Troffer Kit , 2 lamp, F28T8/E HALCO (2) EP232IS/N/MV/HE +US ENERGY (2) KTC-02B04-WA	2		F	4/28	E	96	0	2,038	391	R		391	
32	Fords Prairie Elementary	Classroom 7	4 foot, 2 lamp, F40T12ES 34W, std ballast, Wrap	12		F	2/34	M	72	0.864	2038	1,761	R		1760.832		32	Classroom 7	8', 4 lamp, F28T8/E RLO Tandem HALCO EP432IS/L/MV/HE		6	F	4/28	E	84	1	2,038	1,027	R		1,027	
33	Fords Prairie Elementary	Classroom 7	4 foot, 2 lamp, F40T12ES 34W, std ballast, Wrap	2		F	2/34	M	72	0.144	2038	293	R		293.472		33	Classroom 7	4', 2 lamp, F28T8/E RW (Reduced Wattage) ballast HALCO EP232IS/L/MV/HE	2		F	2/28	E	42	0	2,038	171	R		171	
34	Fords Prairie Elementary	Classroom 8	4 foot, 2 lamp, F40T12ES 34W, std ballast, Wrap	12		F	2/34	M	72	0.864	2038	1,761	R		1760.832		34	Classroom 8	8', 4 lamp, F28T8/E RLO Tandem HALCO EP432IS/L/MV/HE		6	F	4/28	E	84	1	2,038	1,027	R		1,027	
35	Fords Prairie Elementary	Classroom 8	4 foot, 2 lamp, F40T12ES 34W, std ballast, Wrap	2		F	2/34	M	72	0.144	2038	293	R		293.472		35	Classroom 8	4', 2 lamp, F28T8/E RW (Reduced Wattage) ballast HALCO EP232IS/L/MV/HE	2		F	2/28	E	42	0	2,038	171	R		171	
36	Fords Prairie Elementary	Boys Restroom	4 foot, 2 lamp, F40T12ES 34W, std ballast, Surface Mount	4		F	2/34	M	72	0.288	2916	840	R		839.808		36	Boys Restroom	4', 2 lamp, F28T8/E RW (Reduced Wattage) ballast HALCO EP232IS/L/MV/HE	4		F	2/28	E	42	0	2,916	490	R		490	
37	Fords Prairie Elementary	Boys Restroom	4 foot, 2 lamp, F40T12ES 34W, std ballast, w/ Battery Ballast	1		F	2/34	M	72	0.072	8760	631	R		630.72		37	Boys Restroom	4', 2 lamp, F28T8/E RW (Reduced Wattage) ballast with Battery Ballast HALCO EP232IS/L/MV/HE+ BATTERY	1		F	2/28	E	42	0	8,760	368	R		368	
38	Fords Prairie Elementary	Girls Restroom	4 foot, 2 lamp, F40T12ES 34W, std ballast, Surface Mount	4		F	2/34	M	72	0.288	2916	840	R		839.808		38	Girls Restroom	4', 2 lamp, F28T8/E RW (Reduced Wattage) ballast HALCO EP232IS/L/MV/HE	4		F	2/28	E	42	0	2,916	490	R		490	
39	Fords Prairie Elementary	Girls Restroom	4 foot, 2 lamp, F40T12ES 34W, std ballast, w/ Battery Ballast	1		F	2/34	M	72	0.072	8760	631	R		630.72		39	Girls Restroom	4', 2 lamp, F28T8/E RW (Reduced Wattage) ballast with Battery Ballast HALCO EP232IS/L/MV/HE+ BATTERY	1		F	2/28	E	42	0	8,760	368	R		368	
40	Fords Prairie Elementary	Classroom 9	4 foot, 2 lamp, F40T12ES 34W, std ballast, Wrap	12		F	2/34	M	72	0.864	2038	1,761	R		1760.832		40	Classroom 9	8', 4 lamp, F28T8/E RLO Tandem HALCO EP432IS/L/MV/HE		6	F	4/28	E	84	1	2,038	1,027	R		1,027	
41	Fords Prairie Elementary	Classroom 9	4 foot, 2 lamp, F40T12ES 34W, std ballast, Wrap	2		F	2/34	M	72	0.144	2038	293	R		293.472		41	Classroom 9	4', 2 lamp, F28T8/E RW (Reduced Wattage) ballast HALCO EP232IS/L/MV/HE	2		F	2/28	E	42	0	2,038	171	R		171	
42	Fords Prairie Elementary	Classroom 11	4 foot, 2 lamp, F40T12ES 34W, std ballast, Wrap	12		F	2/34	M	72	0.864	2038	1,761	R		1760.832		42	Classroom 11	8', 4 lamp, F28T8/E RLO Tandem HALCO EP432IS/L/MV/HE		6	F	4/28	E	84	1	2,038	1,027	R		1,027	

Fords Prairie Elementary
Facility name

Rachael Rieken
Form completed by

	Location		Existing Lighting*															Location	Proposed Lighting*															
				Quantity										kWh/Yr Adjusted						Quantity									Enter	kWh/Yr Adjusted		
Ln. #	Loc. #	Location Name (floor, room #, etc.)	Existing Fixture Description/Model	Ind. Wired	Tandem Wired	Lamp Type	Lamp Watts	Ballast Type	Watts/ Unit**	Total kW	Hours/ Yr	kWh/Yr	N,R or A***	Remove Fixture	Retrofit with Kit/Comp.	Remain As Is	Ln #	Location Name (floor, room #, etc.)	Proposed Fixture Description/Model	Ind. Wired	Tandem Wired	Lamp Type	Lamp Watts	Ballast Type	Watts/ Unit	Total kW	Hours/ Yr	kWh/ Yr	N,R or A***	New Fixture	Retro. with kit/comp.	Remain As Is
43	Fords Prairie Elementary	Classroom 11	4 foot, 2 lamp, F40T12ES 34W, std ballast, Wrap	2		F	2/34	M	72	0.144	2038	293	R		293.472		43	Classroom 11	4', 2 lamp, F28T8/E RW (Reduced Wattage) ballast HALCO EP232IS/L/MV/HE	2		F	2/28	E	42	0	2,038	171	R		171	
44	Fords Prairie Elementary	Classroom 12	4 foot, 2 lamp, F40T12ES 34W, std ballast, Wrap	18		F	2/34	M	72	1.296	2038	2,641	R		2641.248		44	Classroom 12	8', 4 lamp, F28T8/E RLO Tandem HALCO EP432IS/L/MV/HE		9	F	4/28	E	84	1	2,038	1,541	R		1,541	
45	Fords Prairie Elementary	Classroom 10	4 foot, 2 lamp, F40T12ES 34W, std ballast, Wrap	12		F	2/34	M	72	0.864	2038	1,761	R		1760.832		45	Classroom 10	8', 4 lamp, F28T8/E RLO Tandem HALCO EP432IS/L/MV/HE		6	F	4/28	E	84	1	2,038	1,027	R		1,027	
46	Fords Prairie Elementary	Classroom 10	4 foot, 2 lamp, F40T12ES 34W, std ballast, Wrap	2		F	2/34	M	72	0.144	2038	293	R		293.472		46	Classroom 10	4', 2 lamp, F28T8/E RW (Reduced Wattage) ballast HALCO EP232IS/L/MV/HE	2		F	2/28	E	42	0	2,038	171	R		171	
47	Fords Prairie Elementary	Main School Halls	4 foot, 4 lamp, F40T12, std ballast, Troffer	20		F	4/34	M	147	2.94	8760	25,754	R		25754.4		47	Main School Halls	2x4' EA Troffer Kit , 2 lamp, F28T8/E HALCO EP232IS/N/MV/HE +US ENERGY KTC-02B04-WA	20		F	2/28	E	48	1	8,760	8,410	R		8,410	
48	Fords Prairie Elementary	Main School Halls	4 foot, 2 lamp, F40T12ES 34W, std ballast, Troffer Fixture	1		F	2/34	M	72	0.072	8760	631	R		630.72		48	Main School Halls	4', 2 lamp, F28T8/E RW (Reduced Wattage) ballast HALCO EP232IS/L/MV/HE	1		F	2/28	E	42	0	8,760	368	R		368	
49	Fords Prairie Elementary	Main School Halls	4 foot, 8 lamp, F40T12ES 34W, std ballast, Troffer Fixture	3		F	8/34	M	328	0.984	8760	8,620	R		8619.84		49	Main School Halls	2 - 2x4' EA Troffer Kit , 2 lamp, F28T8/E HALCO (2) EP232IS/N/MV/HE +US ENERGY (2) KTC-02B04-WA	3		F	4/28	E	96	0	8,760	2,523	R		2,523	
50	Fords Prairie Elementary	Classroom 17	4 foot, 2 lamp, F40T12ES 34W, std ballast, Wrap	18		F	2/34	M	72	1.296	2038	2,641	R		2641.248		50	Classroom 17	8', 4 lamp, F28T8/E RLO Tandem HALCO EP432IS/L/MV/HE		9	F	4/28	E	84	1	2,038	1,541	R		1,541	
51	Fords Prairie Elementary	Classroom 14	4 foot, 2 lamp, F40T12ES 34W, std ballast, Wrap	18		F	2/34	M	72	1.296	2038	2,641	R		2641.248		51	Classroom 14	8', 4 lamp, F28T8/E RLO Tandem HALCO EP432IS/L/MV/HE		9	F	4/28	E	84	1	2,038	1,541	R		1,541	
52	Fords Prairie Elementary	Classroom 14	4 foot, 2 lamp, F40T12ES 34W, std ballast, Wrap	3		F	2/34	M	72	0.216	2038	440	R		440.208		52	Classroom 14	4', 2 lamp, F28T8/E RW (Reduced Wattage) ballast HALCO EP232IS/L/MV/HE	3		F	2/28	E	42	0	2,038	257	R		257	
53	Fords Prairie Elementary	Classroom 15	4 foot, 2 lamp, F40T12ES 34W, std ballast, Wrap	18		F	2/34	M	72	1.296	2038	2,641	R		2641.248		53	Classroom 15	8', 4 lamp, F28T8/E RLO Tandem HALCO EP432IS/L/MV/HE		9	F	4/28	E	84	1	2,038	1,541	R		1,541	
54	Fords Prairie Elementary	Classroom 18	4 foot, 2 lamp, F40T12ES 34W, std ballast, Wrap	18		F	2/34	M	72	1.296	2038	2,641	R		2641.248		54	Classroom 18	8', 4 lamp, F28T8/E RLO Tandem HALCO EP432IS/L/MV/HE		9	F	4/28	E	84	1	2,038	1,541	R		1,541	
55	Fords Prairie Elementary	Classroom 16	4 foot, 2 lamp, F40T12ES 34W, std ballast, Wrap	18		F	2/34	M	72	1.296	2038	2,641	R		2641.248		55	Classroom 16	8', 4 lamp, F28T8/E RLO Tandem HALCO EP432IS/L/MV/HE		9	F	4/28	E	84	1	2,038	1,541	R		1,541	
56	Fords Prairie Elementary	Classroom 20	4 foot, 2 lamp, F40T12ES 34W, std ballast, Wrap	18		F	2/34	M	72	1.296	2038	2,641	R		2641.248		56	Classroom 20	8', 4 lamp, F28T8/E RLO Tandem HALCO EP432IS/L/MV/HE		9	F	4/28	E	84	1	2,038	1,541	R		1,541	
57	Fords Prairie Elementary	Boys Restroom	4 foot, 2 lamp, F40T12ES 34W, std ballast, Surface Mount	2		F	2/34	M	72	0.144	2916	420	R		419.904		57	Boys Restroom	8', 4 lamp, F28T8/E RLO Tandem HALCO EP432IS/L/MV/HE		1	F	4/28	E	84	0	2,916	245	R		245	

Fords Prairie Elementary
Facility name

Rachael Rieken
Form completed by

	Location		Existing Lighting*															Location	Proposed Lighting*															
				Quantity										kWh/Yr Adjusted						Quantity									Enter	kWh/Yr Adjusted		
Ln. #	Loc. #	Location Name (floor, room #, etc.)	Existing Fixture Description/Model	Ind. Wired	Tandem Wired	Lamp Type	Lamp Watts	Ballast Type	Watts/ Unit**	Total kW	Hours/ Yr	kWh/Yr	N,R or A***	Remove Fixture	Retrofit with Kit/Comp.	Remain As Is	Ln #	Location Name (floor, room #, etc.)	Proposed Fixture Description/Model	Ind. Wired	Tandem Wired	Lamp Type	Lamp Watts	Ballast Type	Watts/ Unit	Total kW	Hours/ Yr	kWh/ Yr	N,R or A***	New Fixture	Retro. with kit/comp.	Remain As Is
58	Fords Prairie Elementary	Boys Restroom	4 foot, 2 lamp, F40T12ES 34W, std ballast, w/ Battery Ballast	1		F	2/34	M	72	0.072	8760	631	R		630.72		58	Boys Restroom	4', 2 lamp, F28T8/E RW (Reduced Wattage) ballast with Battery Ballast HALCO EP232IS/L/MV/HE+ BATTERY	1		F	2/28	E	42	0	8,760	368	R		368	
59	Fords Prairie Elementary	Girls Restroom	4 foot, 2 lamp, F40T12ES 34W, std ballast, Surface Mount	2		F	2/34	M	72	0.144	2916	420	R		419.904		59	Girls Restroom	8', 4 lamp, F28T8/E RLO Tandem HALCO EP432IS/L/MV/HE		1	F	4/28	E	84	0	2,916	245	R		245	
60	Fords Prairie Elementary	Girls Restroom	4 foot, 2 lamp, F40T12ES 34W, std ballast, w/ Battery Ballast	1		F	2/34	M	72	0.072	8760	631	R		630.72		60	Girls Restroom	4', 2 lamp, F28T8/E RW (Reduced Wattage) ballast with Battery Ballast HALCO EP232IS/L/MV/HE+ BATTERY	1		F	2/28	E	42	0	8,760	368	R		368	
61	Fords Prairie Elementary	Custodian	4 foot, 2 lamp, F40T12ES 34W, std ballast, Wrap	1		F	2/34	M	72	0.072	2188	158	R		157.536		61	Custodian	4', 2 lamp, F28T8/E RW (Reduced Wattage) ballast HALCO EP232IS/L/MV/HE	1		F	2/28	E	42	0	2,188	92	R		92	
62	Fords Prairie Elementary	Hallway from Separate Building	4 foot, 4 lamp, F40T12, std ballast, Troffer	8		F	4/34	M	147	1.176	8760	10,302	R		10301.76		62	Hallway from Separate Building	2x4' EA Troffer Kit , 2 lamp, F28T8/E HALCO EP232IS/N/MV/HE +US ENERGY KTC-02B04-WA	8		F	2/28	E	48	0	8,760	3,364	R		3,364	
63	Fords Prairie Elementary	Portable C1	4 foot, 3 lamp, F40T12ES 34W, std ballast, Troffer	9		F	3/34	M	127	1.143	2038	2,329	R		2329.434		63	Portable C1	2x4' EA Troffer Kit , 2 lamp, F28T8/E HALCO EP232IS/N/MV/HE +US ENERGY KTC-02B04-WA	9		F	2/28	E	48	0	2,038	880	R		880	
64	Fords Prairie Elementary	Portable C2	4 foot, 3 lamp, F40T12ES 34W, std ballast, Troffer	9		F	3/34	M	127	1.143	2038	2,329	R		2329.434		64	Portable C2	2x4' EA Troffer Kit , 2 lamp, F28T8/E HALCO EP232IS/N/MV/HE +US ENERGY KTC-02B04-WA	9		F	2/28	E	48	0	2,038	880	R		880	
65	Fords Prairie Elementary	Portable A1	4 foot, 4 lamp, F40T12, std ballast, Troffer	8		F	4/34	M	147	1.176	2038	2,397	R		2396.688		65	Portable A1	2x4' EA Troffer Kit , 2 lamp, F28T8/E HALCO EP232IS/N/MV/HE +US ENERGY KTC-02B04-WA	8		F	2/28	E	48	0	2,038	783	R		783	
66	Fords Prairie Elementary	Portable A2	4 foot, 4 lamp, F40T12, std ballast, Troffer	8		F	4/34	M	147	1.176	2038	2,397	R		2396.688		66	Portable A2	2x4' EA Troffer Kit , 2 lamp, F28T8/E HALCO EP232IS/N/MV/HE +US ENERGY KTC-02B04-WA	8		F	2/28	E	48	0	2,038	783	R		783	
67	Fords Prairie Elementary	Portable D	4 foot, 2 lamp, F40T12ES 34W, std ballast, Troffer Fixture	16		F	2/34	M	72	1.152	2038	2,348	R		2347.776		67	Portable D	4', 2 lamp, F28T8/E RW (Reduced Wattage) ballast HALCO EP232IS/L/MV/HE	16		F	2/28	E	42	1	2,038	1,370	R		1,370	
68	Fords Prairie Elementary	Portable B1	4 foot, 3 lamp, F40T12ES 34W, std ballast, Troffer	9		F	3/34	M	127	1.143	2038	2,329	R		2329.434		68	Portable B1	2x4' EA Troffer Kit , 2 lamp, F28T8/E HALCO EP232IS/N/MV/HE +US ENERGY KTC-02B04-WA	9		F	2/28	E	48	0	2,038	880	R		880	
69	Fords Prairie Elementary	Portable B2	4 foot, 3 lamp, F40T12ES 34W, std ballast, Troffer	9		F	3/34	M	127	1.143	2038	2,329	R		2329.434		69	Portable B2	2x4' EA Troffer Kit , 2 lamp, F28T8/E HALCO EP232IS/N/MV/HE +US ENERGY KTC-02B04-WA	9		F	2/28	E	48	0	2,038	880	R		880	
70	Fords Prairie Elementary	Portable B Exterior	Incandescent 60 watt	1		I	1/60	N/A	60	0.06	4380	263	N	262.8			70	Portable B Exterior	New CFL Fixture, 1-13 watts - Electronic, Wall Mount Incon 31591-13QE-41K	1		CF	1/13	E	13	0	4,380	57	N	57		

Fords Prairie Elementary
Facility name

Rachael Rieken
Form completed by

	Location			Existing Lighting*														Location		Proposed Lighting*													
				Quantity										kWh/Yr Adjusted						Quantity									Enter	kWh/Yr Adjusted		
Ln. #	Loc. #	Location Name (floor, room #, etc.)	Existing Fixture Description/Model	Ind. Wired	Tandem Wired	Lamp Type	Lamp Watts	Ballast Type	Watts/ Unit**	Total kW	Hours/ Yr	kWh/Yr	N,R or A***	Remove Fixture	Retrofit with Kit/Comp.	Remain As Is	Ln #	Location Name (floor, room #, etc.)	Proposed Fixture Description/Model	Ind. Wired	Tandem Wired	Lamp Type	Lamp Watts	Ballast Type	Watts/ Unit	Total kW	Hours/ Yr	kWh/ Yr	N,R or A***	New Fixture	Retro. with kit/comp.	Remain As Is
71	Fords Prairie Elementary	Playshed	High Pressure Sodium, 250 watts	3		HPS	1/250	M	302	0.906	4380	3,968	N	3968.28			71	Playshed	New CFL Fixture, 2-42 watts - Electronic, Wallpack Incon 31493B-84TT-41K	3		CF	2/42	E	84	0	4,380	1,104	N	1,104		
72	Fords Prairie Elementary	Exterior Recessed	Mercury Vapor, 100 watts	10		MV	1/100	M	119	1.19	4380	5,212	N	5212.2			72	Exterior Recessed	New CFL Fixture, 26 watts - Electronic, Ceiling Mount 16x16 Incon 12591-213QE-41K	10		CF	1/26	E	26	0	4,380	1,139	N	1,139		
73	Fords Prairie Elementary	Playshed Flood Fixture	High Pressure Sodium, 70 watts	1		HPS	1/70	M	95	0.095	4380	416	N	416.1			73	Playshed Flood Fixture	New CFL Flood Fixture, 26 watts - Incon 80595-213QE-41K	1		CF	1/26	E	26	0	4,380	114	N	114		
74	Fords Prairie Elementary	Exterior Ceiling Mount	Mercury Vapor, 100 watts	6		MV	1/100	M	119	0.714	4380	3,127	N	3127.32			74	Exterior Ceiling Mount	New CFL Fixture, 26 watts - Electronic, Ceiling Mount 16x16 Incon 12591-213QE-41K	6		CF	1/26	E	26	0	4,380	683	N	683		
75	Fords Prairie Elementary	Extertior Kitchen Loading Dock	High Pressure Sodium, 70 watts	1		HPS	1/70	M	95	0.095	4380	416	N	416.1			75	Extertior Kitchen Loading Dock	New CFL Flood Fixture, 26 watts - Incon 80595-213QE-41K	1		CF	1/26	E	26	0	4,380	114	N	114		
76	Fords Prairie Elementary	Extertior Kitchen Loading Dock	High Pressure Sodium, 250 watts	2		HPS	1/250	M	302	0.604	4380	2,646	A			2645.52	76	Extertior Kitchen Loading Dock	High Pressure Sodium, 250 watts	2		HPS	1/250	M	302	1	4,380	2,646	A			2,646
77	Fords Prairie Elementary	Exterior back door of Gym	High Pressure Sodium, 250 watts	1		HPS	1/250	M	302	0.302	4380	1,323	N	1322.76			77	Exterior back door of Gym	New CFL Fixture, 2-42 watts - Electronic, Wallpack Incon 31493B-84TT-41K	1		CF	2/42	E	84	0	4,380	368	N	368		
TOTAL					**556**					**57.6**		**170,484**														**25.0**		**70,060**				
Interior Locations										53.7		153,113														23.5		63,836				
Exterior Locations										4.0		17,371														1.4		6,224				

		Interior	Exterior
Baseline Total kWh	170,484	153,113	17,371
Baseline Total kW	57.6	54	4.0
Baseline Annual kW	691.7	644.1	47.6
		Interior	Exterior
Proposed Total kWh	70,060	63,836	6,224
Proposed Total kW	25.0	24	1.4
Proposed Annual kW	299.5	282.5	17.1
		Interior	Exterior
Savings kWh	100,425	89,278	11,147
Savings kW	32.7	30.1	2.5
Annual Savings kW	392.2	361.7	30.5

*** N=New Fixture; R=Retrofit with kit/component; A=As Is

Jefferson Lincoln Elementary
Facility name

Rachael Rieken
Form completed by

	Location		Existing Lighting*														
				Quantity										kWh/Yr Adjusted		
Ln. #	Loc. #	Location Name (floor, room	Existing Fixture Description/Model	Ind. Wired	Tandem Wired	Lamp Type	Lamp Watts	Ballast Type	Watts/ Unit**	Total kW	Hours/ Yr	kWh/Yr	N,R or A***	Remove Fixture	Retrofit with Kit/Comp.	Remain As Is
1	Jefferson Lincoln Elementary	Main Office	2x4, 4 lamp, F40T12, std ballast, Surface Mount Fixture	10		F	4/34	M	147	1.47	2766	4,066	R		4066.02	
2	Jefferson Lincoln Elementary	Main Office	4 foot, 2 lamp, F40T12ES 34W, std ballast, Surface Mount	4		F	2/34	M	72	0.288	2766	797	R		796.608	
3	Jefferson Lincoln Elementary	Main Office	4 foot, 2 lamp, F40T12ES 34W, std ballast, Troffer Fixture	1		F	2/34	M	72	0.072	2766	199	R		199.152	
4	Jefferson Lincoln Elementary	Main Office	4 foot, 2 lamp, F40T12ES 34W, std ballast, Surface Mount	2		F	2/34	M	72	0.144	2766	398	R		398.304	
5	Jefferson Lincoln Elementary	Nurse	2x4, 4 lamp, F40T12, std ballast, Surface Mount Fixture	2		F	4/34	M	147	0.294	2766	813	R		813.204	
6	Jefferson Lincoln Elementary	Mail Room	2x4, 4 lamp, F40T12, std ballast, Surface Mount Fixture	2		F	4/34	M	147	0.294	2766	813	R		813.204	
7	Jefferson Lincoln Elementary	Restrooms	4 foot, 2 lamp, F40T12ES 34W, std ballast, Surface Mount	5		F	2/34	M	72	0.36	2766	996	R		995.76	
8	Jefferson Lincoln Elementary	Kitchen	4 foot, 2 lamp, F40T12ES 34W, std ballast, Surface Mount	8		F	2/34	M	72	0.576	2188	1,260	N	1260.288		
9	Jefferson Lincoln Elementary	Kitchen Storage	Incandescent 100 watt	2		I	1/100	N/A	100	0.2	2920	584	R		584	
10	Jefferson Lincoln Elementary	Gym Hall	2x4, 4 lamp, F40T12, std ballast, Surface Mount Fixture	4		F	4/34	M	147	0.588	8760	5,151	R		5150.88	
11	Jefferson Lincoln Elementary	Gym	4 foot, 4 lamp, F40T12, std ballast, Troffer	16		F	4/34	M	147	2.352	2766	6,506	R		6505.632	
12	Jefferson Lincoln Elementary	Custodian Office	Incandescent 100 watt	1		I	1/100	N/A	100	0.1	2402	240	N	240.2		
13	Jefferson Lincoln Elementary	Boiler Room	Incandescent 100 watt	8		I	1/100	N/A	100	0.8	2188	1,750	N	1750.4		
14	Jefferson Lincoln Elementary	Entry Hall	2x4, 4 lamp, F40T12, std ballast, Surface Mount Fixture	2		F	4/34	M	147	0.294	8760	2,575	R		2575.44	
15	Jefferson Lincoln Elementary	Entry Hall Cove	4 foot, 1 lamp, F40T12ES 34W, std ballast, Strip	2		F	1/34	M	46	0.092	8760	806	R		805.92	
16	Jefferson Lincoln Elementary	Classroom 6	4 foot, 2 lamp, F40T12ES 34W, std ballast, Wrap	18		F	2/34	M	72	1.296	2038	2,641	R		2641.248	
17	Jefferson Lincoln Elementary	Classroom 5	4 foot, 2 lamp, F40T12ES 34W, std ballast, Wrap	18		F	2/34	M	72	1.296	2038	2,641	R		2641.248	
18	Jefferson Lincoln Elementary	Classroom 4	4 foot, 2 lamp, F40T12ES 34W, std ballast, Wrap	18		F	2/34	M	72	1.296	2038	2,641	R		2641.248	
19	Jefferson Lincoln Elementary	Gym Storage #1	Incandescent 150 watt	2		I	1/150	N/A	150	0.3	2920	876	N	876		
20	Jefferson Lincoln Elementary	Gym Storage #2	Incandescent 150 watt	5		I	1/150	N/A	150	0.75	2920	2,190	N	2190		
21	Jefferson Lincoln Elementary	Classroom 3	4 foot, 2 lamp, F40T12ES 34W, std ballast, Wrap	18		F	2/34	M	72	1.296	2038	2,641	R		2641.248	

	Location		Proposed Lighting*													
				Quantity								Enter	kWh/Yr Adjusted		
Ln #	Loc. #	Location Name (floor, room #, etc.)	Proposed Fixture Description/Model	Ind. Wired	Tandem Wired	Lamp Watts	Ballast Type	Watts/ Unit	Total kW	Hours/ Yr	kWh/ Yr	N,R or A***	New Fixture	Retro. with kit/comp.	Remain As Is
1	Jefferson Lincoln Elementary	Main Office	2x4' EA Troffer Kit , 2 lamp, F28T8/E Halco EP232IS/N/MV/HE+US	10		2/28	E	48	0	2,766	1,328	R		1,328	
2	Jefferson Lincoln Elementary	Main Office	8', 4 lamp, F28T8/E RLO Tandem Halco EP432IS/L/MV/HE		2	4/28	E	84	0	2,766	465	R		465	
3	Jefferson Lincoln Elementary	Main Office	4', 2 lamp, F28T8/E RW (Reduced Wattage) ballast Halco EP232IS/L/MV/HE	1		2/28	E	42	0	2,766	116	R		116	
4	Jefferson Lincoln Elementary	Main Office	4', 2 lamp, F28T8/E RW (Reduced Wattage) ballast Halco EP232IS/L/MV/HE	2		2/28	E	42	0	2,766	232	R		232	
5	Jefferson Lincoln Elementary	Nurse	2x4' EA Troffer Kit , 2 lamp, F28T8/E Halco EP232IS/N/MV/HE+US	2		2/28	E	48	0	2,766	266	R		266	
6	Jefferson Lincoln Elementary	Mail Room	2x4' EA Troffer Kit , 2 lamp, F28T8/E Halco EP232IS/N/MV/HE+US	2		2/28	E	48	0	2,766	266	R		266	
7	Jefferson Lincoln Elementary	Restrooms	4', 2 lamp, F28T8/E RW (Reduced Wattage) ballast Halco EP232IS/L/MV/HE	5		2/28	E	42	0	2,766	581	R		581	
8	Jefferson Lincoln Elementary	Kitchen	4', 2 lamp, F28T8/E RW (Reduced Wattage) ballast Halco EP232IS/L/MV/HE	8		2/28	E	42	0	2,188	735	N	735		
9	Jefferson Lincoln Elementary	Kitchen Storage	New Strip Fixture, 4', 2 lamp F28T8/E, RLO ballast TX FLOUR C232LOWMV	1		2/28	E	42	0	2,920	123	R		123	
10	Jefferson Lincoln Elementary	Gym Hall	2x4' EA Troffer Kit , 2 lamp, F28T8/E Halco EP232IS/N/MV/HE+US	4		2/28	E	48	0	8,760	1,682	R		1,682	
11	Jefferson Lincoln Elementary	Gym	8', 4 lamp, F28T8/E RLO Tandem Halco EP432IS/L/MV/HE	16		4/28	E	84	1	2,213	2,974	R		2,974	
12	Jefferson Lincoln Elementary	Custodian Office	New Strip Fixture, 4', 2 lamp F28T8/E, RLO ballast TX FLOUR C232LOWMV	1		2/28	E	42	0	2,402	101	N	101		
13	Jefferson Lincoln Elementary	Boiler Room	4', 1 lamp F28T8/E NLO ballast, Strip Fixture TX FLOUR S132LOWMV	8		1/28	E	24	0	2,188	420	N	420		
14	Jefferson Lincoln Elementary	Entry Hall	2x4' EA Troffer Kit , 2 lamp, F28T8/E Halco EP232IS/N/MV/HE+US	2		2/28	E	48	0	8,760	841	R		841	
15	Jefferson Lincoln Elementary	Entry Hall Cove	4', 1 lamp, F28T8/E RW (Reduced Wattage) ballast Halco EP132IS/L/MV/HE	2		1/28	E	22	0	8,760	385	R		385	
16	Jefferson Lincoln Elementary	Classroom 6	8', 4 lamp, F28T8/E RLO Tandem Halco EP432IS/L/MV/HE		9	4/28	E	84	1	2,038	1,541	R		1,541	
17	Jefferson Lincoln Elementary	Classroom 5	8', 4 lamp, F28T8/E RLO Tandem Halco EP432IS/L/MV/HE		9	4/28	E	84	1	2,038	1,541	R		1,541	
18	Jefferson Lincoln Elementary	Classroom 4	8', 4 lamp, F28T8/E RLO Tandem Halco EP432IS/L/MV/HE		9	4/28	E	84	1	2,038	1,541	R		1,541	
19	Jefferson Lincoln Elementary	Gym Storage #1	4', 1 lamp F28T8/E NLO ballast, Strip Fixture TX FLOUR S132LOWMV	2		1/28	E	24	0	2,920	140	N	140		
20	Jefferson Lincoln Elementary	Gym Storage #2	4', 1 lamp F28T8/E NLO ballast, Strip Fixture TX FLOUR S132LOWMV	5		1/28	E	24	0	2,920	350	N	350		
21	Jefferson Lincoln Elementary	Classroom 3	8', 4 lamp, F28T8/E RLO Tandem Halco EP432IS/L/MV/HE		9	4/28	E	84	1	2,038	1,541	R		1,541	

Jefferson Lincoln Elementary
Facility name
Rachael Rieken
Form completed by

	Location		Existing Lighting*														
				Quantity											kWh/Yr Adjusted		
Ln. #	Loc. #	Location Name (floor, room	Existing Fixture Description/Model	Ind. Wired	Tandem Wired	Lamp Type	Lamp Watts	Ballast Type	Watts/ Unit**	Total kW	Hours/ Yr	kWh/Yr	N,R or A***	Remove Fixture	Retrofit with Kit/Comp.	Remain As Is
22	Jefferson Lincoln Elementary	Classroom 2	4 foot, 2 lamp, F40T12ES 34W, std ballast, Wrap	18		F	2/34	M	72	1.296	2038	2,641	R		2641.248	
23	Jefferson Lincoln Elementary	Classroom 1	4 foot, 2 lamp, F40T12ES 34W, std ballast, Wrap	18		F	2/34	M	72	1.296	2038	2,641	R		2641.248	
24	Jefferson Lincoln Elementary	Library Entry from Gym	4 foot, 4 lamp, F40T12, std ballast, Troffer	2		F	4/34	M	147	0.294	2766	813	R		813.204	
25	Jefferson Lincoln Elementary	Library	4 foot, 6 lamp F40T12ES, 34W 3-EE ballast Surface Mnt Fixture	12		F	6/34	M	216	2.592	2766	7,169	R		7169.472	
26	Jefferson Lincoln Elementary	Classroom 7	4 foot, 6 lamp F40T12ES, 34W 3-EE ballast Surface Mnt Fixture	4		F	6/34	M	216	0.864	2038	1,761	R		1760.832	
27	Jefferson Lincoln Elementary	Classroom 7 Office	4 foot, 2 lamp, F40T12ES 34W, std ballast, Wrap	8		F	2/34	M	72	0.576	2402	1,384	R		1383.552	
28	Jefferson Lincoln Elementary	Classroom 7 Office	4 foot, 2 lamp, F40T12ES 34W, std ballast, Wrap	4		F	2/34	M	72	0.288	2402	692	R		691.776	
29	Jefferson Lincoln Elementary	Server Room / Paper	4 foot, 2 lamp, F40T12ES 34W, std ballast, Wrap	2		F	2/34	M	72	0.144	2920	420	R		420.48	
30	Jefferson Lincoln Elementary	Server Room / Paper	4 foot, 2 lamp, F40T12ES 34W, std ballast, Wrap	3		F	2/34	M	72	0.216	2920	631	R		630.72	
31	Jefferson Lincoln Elementary	Server Room / Paper	4 foot, 1 lamp, F40T12ES 34W, std ballast, Strip	1		F	1/34	M	46	0.046	2920	134	R		134.32	
32	Jefferson Lincoln Elementary	Teacher's Lounge	4 foot, 2 lamp, F40T12ES 34W, std ballast, Surface Mount	5		F	2/34	M	72	0.36	2766	996	R		995.76	
33	Jefferson Lincoln Elementary	Teacher's Lounge under	4 foot, 1 lamp, F40T12ES 34W, std ballast, Strip	1		F	1/34	M	46	0.046	2766	127	R		127.236	
34	Jefferson Lincoln Elementary	Library Office	4 foot, 2 lamp, F40T12ES 34W, std ballast, Wrap	4		F	2/34	M	72	0.288	2402	692	R		691.776	
35	Jefferson Lincoln Elementary	Counselor	4 foot, 2 lamp, F40T12ES 34W, std ballast, Wrap	4		F	2/34	M	72	0.288	2766	797	R		796.608	
36	Jefferson Lincoln Elementary	Counselor	4 foot, 2 lamp, F40T12ES 34W, std ballast, Wrap	2		F	2/34	M	72	0.144	2766	398	R		398.304	
37	Jefferson Lincoln Elementary	Classroom18	4 foot, 4 lamp, F40T12, std ballast, Troffer	11		F	4/34	M	147	1.617	2038	3,295	R		3295.446	
38	Jefferson Lincoln Elementary	Classroom18	4 foot, 1 lamp, F40T12ES 34W, std ballast, Strip	6		F	1/34	M	46	0.276	2038	562	R		562.488	
39	Jefferson Lincoln Elementary	Classroom19	4 foot, 4 lamp, F40T12, std ballast, Troffer	11		F	4/34	M	147	1.617	2038	3,295	R		3295.446	
40	Jefferson Lincoln Elementary	Classroom19	4 foot, 1 lamp, F40T12ES 34W, std ballast, Strip	6		F	1/34	M	46	0.276	2038	562	R		562.488	
41	Jefferson Lincoln Elementary	Classroom20	4 foot, 4 lamp, F40T12, std ballast, Troffer	11		F	4/34	M	147	1.617	2038	3,295	R		3295.446	
42	Jefferson Lincoln Elementary	Classroom20	4 foot, 1 lamp, F40T12ES 34W, std ballast, Strip	6		F	1/34	M	46	0.276	2038	562	R		562.488	

	Location		Proposed Lighting*													
				Quantity								Enter	kWh/Yr Adjusted		
Ln #	Loc. #	Location Name (floor, room #, etc.)	Proposed Fixture Description/Model	Ind. Wired	Tandem Wired	Lamp Watts	Ballast Type	Watts/ Unit	Total kW	Hours/ Yr	kWh/ Yr	N,R or A***	New Fixture	Retro. with kit/comp.	Remain As Is
22	Jefferson Lincoln Elementary	Classroom 2	8', 4 lamp, F28T8/E RLO Tandem Halco EP432IS/L/MV/HE		9	4/28	E	84	1	2,038	1,541	R		1,541	
23	Jefferson Lincoln Elementary	Classroom 1	8', 4 lamp, F28T8/E RLO Tandem Halco EP432IS/L/MV/HE		9	4/28	E	84	1	2,038	1,541	R		1,541	
24	Jefferson Lincoln Elementary	Library Entry from Gym	2x4' EA Troffer Kit , 2 lamp, F28T8/E Halco EP232IS/N/MV/HE+US	2		2/28	E	48	0	2,766	266	R		266	
25	Jefferson Lincoln Elementary	Library	8', 4 lamp, F28T8/E RLO Tandem Halco EP432IS/L/MV/HE	12		4/28	E	84	1	2,766	2,788	R		2,788	
26	Jefferson Lincoln Elementary	Classroom 7	8', 4 lamp, F28T8/E RLO Tandem Halco EP432IS/L/MV/HE	4		4/28	E	84	0	2,038	685	R		685	
27	Jefferson Lincoln Elementary	Classroom 7 Office	8', 4 lamp, F28T8/E RLO Tandem Halco EP432IS/L/MV/HE		4	4/28	E	84	0	2,402	807	R		807	
28	Jefferson Lincoln Elementary	Classroom 7 Office	4', 2 lamp, F28T8/E RW (Reduced Wattage) ballast Halco EP232IS/L/MV/HE	4		2/28	E	42	0	2,402	404	R		404	
29	Jefferson Lincoln Elementary	Server Room / Paper Room	8', 4 lamp, F28T8/E RLO Tandem Halco EP432IS/L/MV/HE		1	4/28	E	84	0	2,920	245	R		245	
30	Jefferson Lincoln Elementary	Server Room / Paper Room	4', 2 lamp, F28T8/E RW (Reduced Wattage) ballast Halco EP232IS/L/MV/HE	3		2/28	E	42	0	2,920	368	R		368	
31	Jefferson Lincoln Elementary	Server Room / Paper Room	4', 1 lamp, F28T8/E RW (Reduced Wattage) ballast Halco EP132IS/L/MV/HE	1		1/28	E	22	0	2,920	64	R		64	
32	Jefferson Lincoln Elementary	Teacher's Lounge	4', 2 lamp, F28T8/E RW (Reduced Wattage) ballast Halco EP232IS/L/MV/HE	5		2/28	E	42	0	2,766	581	R		581	
33	Jefferson Lincoln Elementary	Teacher's Lounge under counter	4', 1 lamp, F28T8/E RW (Reduced Wattage) ballast Halco EP132IS/L/MV/HE	1		1/28	E	22	0	2,766	61	R		61	
34	Jefferson Lincoln Elementary	Library Office	8', 4 lamp, F28T8/E RLO Tandem Halco EP432IS/L/MV/HE		2	4/28	E	84	0	2,402	404	R		404	
35	Jefferson Lincoln Elementary	Counselor	8', 4 lamp, F28T8/E RLO Tandem Halco EP432IS/L/MV/HE		2	4/28	E	84	0	2,766	465	R		465	
36	Jefferson Lincoln Elementary	Counselor	4', 2 lamp, F28T8/E RW (Reduced Wattage) ballast Halco EP232IS/L/MV/HE	2		2/28	E	42	0	2,766	232	R		232	
37	Jefferson Lincoln Elementary	Classroom18	2x4' EA Troffer Kit , 2 lamp, F28T8/E Halco EP232IS/N/MV/HE+US	11		2/28	E	48	1	2,038	1,076	R		1,076	
38	Jefferson Lincoln Elementary	Classroom18	4', 2 lamp, F28T8/E RW (Reduced Wattage) ballast - Tandem Wired Halco		3	2/28	E	42	0	2,038	257	R		257	
39	Jefferson Lincoln Elementary	Classroom19	2x4' EA Troffer Kit , 2 lamp, F28T8/E Halco EP232IS/N/MV/HE+US	11		2/28	E	48	1	2,038	1,076	R		1,076	
40	Jefferson Lincoln Elementary	Classroom19	4', 2 lamp, F28T8/E RW (Reduced Wattage) ballast - Tandem Wired Halco		3	2/28	E	42	0	2,038	257	R		257	
41	Jefferson Lincoln Elementary	Classroom20	2x4' EA Troffer Kit , 2 lamp, F28T8/E Halco EP232IS/N/MV/HE+US	11		2/28	E	48	1	2,038	1,076	R		1,076	
42	Jefferson Lincoln Elementary	Classroom20	4', 2 lamp, F28T8/E RW (Reduced Wattage) ballast - Tandem Wired Halco		3	2/28	E	42	0	2,038	257	R		257	

Jefferson Lincoln Elementary
Facility name
Rachael Rieken
Form completed by

	Location		Existing Lighting*														
				Quantity											kWh/Yr Adjusted		
Ln. #	Loc. #	Location Name (floor, room	Existing Fixture Description/Model	Ind. Wired	Tandem Wired	Lamp Type	Lamp Watts	Ballast Type	Watts/ Unit**	Total kW	Hours/ Yr	kWh/Yr	N,R or A***	Remove Fixture	Retrofit with Kit/Comp.	Remain As Is
43	Jefferson Lincoln Elementary	Classroom2 1	4 foot, 4 lamp, F40T12, std ballast, Troffer	11		F	4/34	M	147	1.617	2038	3,295	R		3295.446	
44	Jefferson Lincoln Elementary	Classroom2 1	4 foot, 1 lamp, F40T12ES 34W, std ballast, Strip	6		F	1/34	M	46	0.276	2038	562	R		562.488	
45	Jefferson Lincoln Elementary	Classroom 21/19 Breezeway	4 foot, 8 lamp, F40T12ES 34W, std ballast, Surface Mnt Fixture	4		F	8/34	M	328	1.312	4380	5,747	R		5746.56	
46	Jefferson Lincoln Elementary	Upper Classroom	4 foot, 8 lamp, F40T12ES 34W, std ballast, Surface Mnt Fixture	2		F	8/34	M	328	0.656	2038	1,337	R		1336.928	
47	Jefferson Lincoln Elementary	Upper Classroom Storage	Incandescent 60 watt	2		I	1/60	N/A	60	0.12	2920	350	R		350.4	
48	Jefferson Lincoln Elementary	Upper Classroom Storage	4 foot, 1 lamp, F40T12ES 34W, std ballast, Strip	1		F	1/34	M	46	0.046	2920	134	R		134.32	
49	Jefferson Lincoln Elementary	Custodian Storage	Incandescent 60 watt	2		I	1/60	N/A	60	0.12	2920	350	R		350.4	
50	Jefferson Lincoln Elementary	Classroom 9-12 & 14-17	4 foot, 4 lamp, F40T12, std ballast, Troffer	8		F	4/34	M	147	1.176	2038	2,397	R		2396.688	
51	Jefferson Lincoln Elementary	Classroom 9-12 & 14-17	4 foot, 1 lamp, F40T12ES 34W, std ballast, Strip	48		F	1/34	M	46	2.208	2038	4,500	R		4499.904	
52	Jefferson Lincoln Elementary	Clm 9/10 11/13 15/17 Breezeways	4 foot, 8 lamp, F40T12ES 34W, std ballast, Surface Mnt Fixture	8		F	8/34	M	328	2.624	4380	11,493	R		11493.12	
53	Jefferson Lincoln Elementary	Hallway	4 foot, 4 lamp, F40T12, std ballast, Troffer	17		F	4/34	M	147	2.499	8760	21,891	R		21891.24	
54	Jefferson Lincoln Elementary	Hallway	Incandescent 90 watt	12		I	1/90	N/A	90	1.08	8760	9,461	R		9460.8	
55	Jefferson Lincoln Elementary	Hallway	Mercury Vapor, 100 watts	2		MV	1/100	M	119	0.238	8760	2,085	N	2084.88		
56	Jefferson Lincoln Elementary	Hallway Upper Storage	4 foot, 2 lamp, F40T12ES 34W, std ballast, Wrap	4		F	2/34	M	72	0.288	2920	841	R		840.96	
57	Jefferson Lincoln Elementary	Hallway Upper Storage	Incandescent 150 watt	5		I	1/150	N/A	150	0.75	2920	2,190	N	2190		
58	Jefferson Lincoln Elementary	Hallway Upper Storage	4 foot, 1 lamp, F40T12ES 34W, std ballast, Strip	2		F	1/34	M	46	0.092	2920	269	R		268.64	
59	Jefferson Lincoln Elementary	Hall to Stairs	4 foot, 2 lamp, F40T12ES 34W, std ballast, Wrap	3		F	2/34	M	72	0.216	8760	1,892	R		1892.16	
60	Jefferson Lincoln Elementary	Boys / Girls RR	4 foot, 2 lamp, F40T12ES 34W, std ballast, Surface Mount	2		F	2/34	M	72	0.144	2766	398	R		398.304	
61	Jefferson Lincoln Elementary	Boys / Girls RR	4 foot, 1 lamp, F40T12ES 34W, std ballast, Wrap	12		F	2/34	M	46	0.552	2766	1,527	R		1526.832	
62	Jefferson Lincoln Elementary	Boys / Girls RR	4 foot, 1 lamp, F40T12ES 34W, std ballast, Wrap	2		F	2/34	M	46	0.092	2766	254	R		254.472	
63	Jefferson Lincoln Elementary	Small Hallway RR	Incandescent 60 watt	4		I	1/60	N/A	60	0.24	2766	664	N	663.84		
64	Jefferson Lincoln Elementary	Portable C	4 foot, 2 lamp, F40T12ES 34W, std ballast, Troffer Fixture	16		F	2/34	M	72	1.152	2038	2,348	R		2347.776	

	Location		Proposed Lighting*													
				Quantity								Enter	kWh/Yr Adjusted		
Ln #	Loc. #	Location Name (floor, room #, etc.)	Proposed Fixture Description/Model	Ind. Wired	Tandem Wired	Lamp Watts	Ballast Type	Watts/ Unit	Total kW	Hours/ Yr	kWh/ Yr	N,R or A***	New Fixture	Retro. with kit/comp.	Remain As Is
43	Jefferson Lincoln Elementary	Classroom21	2x4' EA Troffer Kit , 2 lamp, F28T8/E Halco EP232IS/N/MV/HE+US	11		2/28	E	48	1	2,038	1,076	R		1,076	
44	Jefferson Lincoln Elementary	Classroom21	4', 2 lamp, F28T8/E RW (Reduced Wattage) ballast - Tandem Wired Halco		3	2/28	E	42	0	2,038	257	R		257	
45	Jefferson Lincoln Elementary	Classroom 21/19 Breezeway	2 - 2x4' EA Troffer Kit , 2 lamp, F28T8/E Halco (2) EP232IS/N/MV/HE+US	4		4/28	E	96	0	4,380	1,682	R		1,682	
46	Jefferson Lincoln Elementary	Upper Classroom	2 - 2x4' EA Troffer Kit , 2 lamp, F28T8/E Halco (2) EP232IS/N/MV/HE+US	2		4/28	E	96	0	2,038	391	R		391	
47	Jefferson Lincoln Elementary	Upper Classroom Storage	23watt CFL, Screwin TCP 28923	2		1/23		23	0	2,920	134	R		134	
48	Jefferson Lincoln Elementary	Upper Classroom Storage	4', 1 lamp, F28T8/E RW (Reduced Wattage) ballast Halco EP132IS/L/MV/HE	1		1/28	E	22	0	2,920	64	R		64	
49	Jefferson Lincoln Elementary	Custodian Storage	23watt CFL, Screwin TCP 28923	2		1/23		23	0	2,920	134	R		134	
50	Jefferson Lincoln Elementary	Classroom 9-12 & 14-17	2x4' EA Troffer Kit , 2 lamp, F28T8/E Halco EP232IS/N/MV/HE+US	8		2/28	E	48	0	2,038	783	R		783	
51	Jefferson Lincoln Elementary	Classroom 9-12 & 14-17	4', 2 lamp, F28T8/E RW (Reduced Wattage) ballast - Tandem Wired Halco		24	2/28	E	42	1	2,038	2,054	R		2,054	
52	Jefferson Lincoln Elementary	Clm 9/10 11/13 15/17 Breezeways	2 - 2x4' EA Troffer Kit , 2 lamp, F28T8/E Halco (2) EP232IS/N/MV/HE+US	8		4/28	E	96	1	4,380	3,364	R		3,364	
53	Jefferson Lincoln Elementary	Hallway	2x4' EA Troffer Kit , 2 lamp, F28T8/E Halco EP232IS/N/MV/HE+US	17		2/28	E	48	1	8,760	7,148	R		7,148	
54	Jefferson Lincoln Elementary	Hallway	Remove Fixture	12		/				8,760		R			
55	Jefferson Lincoln Elementary	Hallway	New Wrap Fixture, 4', 2 lamp F28T8/E, RW (Reduced Wattage) ballast TEXAS	2		2/28	E	42	0	8,760	736	N	736		
56	Jefferson Lincoln Elementary	Hallway Upper Storage	4', 2 lamp, F28T8/E RW (Reduced Wattage) ballast Halco EP232IS/L/MV/HE	4		2/28	E	42	0	2,920	491	R		491	
57	Jefferson Lincoln Elementary	Hallway Upper Storage	New Strip Fixture, 4', 2 lamp F28T8/E, RLO ballast TX FLOUR C232LOWMV	5		2/28	E	42	0	2,920	613	N	613		
58	Jefferson Lincoln Elementary	Hallway Upper Storage	4', 1 lamp, F28T8/E RW (Reduced Wattage) ballast Halco EP132IS/L/MV/HE	2		1/28	E	22	0	2,920	128	R		128	
59	Jefferson Lincoln Elementary	Hall to Stairs	4', 2 lamp, F28T8/E RW (Reduced Wattage) ballast Halco EP232IS/L/MV/HE	3		2/28	E	42	0	8,760	1,104	R		1,104	
60	Jefferson Lincoln Elementary	Boys / Girls RR	4', 2 lamp, F28T8/E RW (Reduced Wattage) ballast Halco EP232IS/L/MV/HE	2		2/28	E	42	0	2,766	232	R		232	
61	Jefferson Lincoln Elementary	Boys / Girls RR	4', 2 lamp, F28T8/E RW (Reduced Wattage) ballast - Tandem Wired Halco		6	2/28	E	42	0	2,766	697	R		697	
62	Jefferson Lincoln Elementary	Boys / Girls RR	4', 1 lamp, F28T8/E RW (Reduced Wattage) ballast Halco EP132IS/L/MV/HE	2		1/28	E	22	0	2,766	122	R		122	
63	Jefferson Lincoln Elementary	Small Hallway RR	New T8 Vanity Fixture, 2', 1 lamp, F17T8/E. TX FLOUR 555A217MV	2		1/17	E	20	0	2,766	111	N	111		
64	Jefferson Lincoln Elementary	Portable C	4', 2 lamp, F28T8/E RW (Reduced Wattage) ballast Halco EP232IS/L/MV/HE	16		2/28	E	42	1	2,038	1,370	R		1,370	

Jefferson Lincoln Elementary
Facility name
Rachael Rieken
Form completed by

	Location		Existing Lighting*														
				Quantity										kWh/Yr Adjusted			
Ln. #	Loc. #	Location Name (floor, room	Existing Fixture Description/Model	Ind. Wired	Tandem Wired	Lamp Type	Lamp Watts	Ballast Type	Watts/ Unit**	Total kW	Hours/ Yr	kWh/Yr	N,R or A***	Remove Fixture	Retrofit with Kit/Comp.	Remain As Is
65	Jefferson Lincoln Elementary	Portable A1 - A2	3 lamp, 4', F32T8 Electronic ballast	18		F	3/32	E	90	1.62	2038	3,302	A			3301.56
66	Jefferson Lincoln Elementary	Portable A1 - A2 Exterior	Incandescent 60 watt	1		I	1/60	N/A	60	0.06	4380	263	N	262.8		
67	Jefferson Lincoln Elementary	PortBble B1 - B2	4 foot, 3 lamp, F40T12ES 34W, std ballast, Troffer	18		F	3/34	M	127	2.286	2038	4,659	R		4658.868	
68	Jefferson Lincoln Elementary	PortBble B1 - B2 Exterior	Incandescent 60 watt	1		I	1/60	N/A	60	0.06	4380	263	N	262.8		
69	Jefferson Lincoln Elementary	Exterior Recessed	Incandescent 100 watt	14		I	1/100	N/A	100	1.4	4380	6,132	N	6132		
70	Jefferson Lincoln Elementary	Exterior	High Pressure Sodium, 70 watts	3		HPS	1/70	M	95	0.285	4380	1,248	N	1248.3		
71	Jefferson Lincoln Elementary	Exterior	High Pressure Sodium, 250 watts	2		HPS	1/250	M	302	0.604	4380	2,646	A			2645.52
72	Jefferson Lincoln Elementary	Exterior	High Pressure Sodium, 50 watts	2		HPS	1/50	M	61	0.122	4380	534	N	534.36		
73	Jefferson Lincoln Elementary	Exterior	Metal halide , 250 watts	1		MH	1/250	M	295	0.295	4380	1,292	N	1292.1		
74	Jefferson Lincoln Elementary	Exterior	Mercury Vapor, 100 watts	4		MV	1/100	M	119	0.476	4380	2,085	N	2084.88		
75	Jefferson Lincoln Elementary	Exterior Parking Lot	Metal halide , 1000 watts	1		MH	1/1000	M	1080	1.08	4380	4,730	N	4730.4		
76	Jefferson Lincoln Elementary	Exterior Parking Lot Floods	High Pressure Sodium, 250 watts	2		HPS	1/250	M	302	0.604	4380	2,646	A			2645.52
TOTAL					**527**					**55.0**		**177,242**				

	Location		Proposed Lighting*													
				Quantity								Enter	kWh/Yr Adjusted		
Ln #	Loc. #	Location Name (floor, room #, etc.)	Proposed Fixture Description/Model	Ind. Wired	Tandem Wired	Lamp Watts	Ballast Type	Watts/ Unit	Total kW	Hours/ Yr	kWh/ Yr	N,R or A***	New Fixture	Retro. with kit/comp.	Remain As Is
65	Jefferson Lincoln Elementary	Portable A1 - A2	3 lamp, 4', F32T8 Electronic ballast	18		3/32	E	90	2	2,038	3,302	A			3,302
66	Jefferson Lincoln Elementary	Portable A1 - A2 Exterior	New CFL Fixture, 1-13 watts - Electronic, Wall Mount Incon 32595-13QE-41K	1		1/13	E	13	0	4,380	57	N	57		
67	Jefferson Lincoln Elementary	PortBble B1 - B2	2x4' EA Troffer Kit , 2 lamp, F28T8/E Halco EP232IS/N/MV/HE+US	18		2/28	E	48	1	2,038	1,761	R		1,761	
68	Jefferson Lincoln Elementary	PortBble B1 - B2 Exterior	New CFL Fixture, 1-13 watts - Electronic, Wall Mount Incon 32595-13QE-41K	1		1/13	E	13	0	4,380	57	N	57		
69	Jefferson Lincoln Elementary	Exterior Recessed	New CFL Fixture, 26 watts - Electronic, Ceiling Mount 16x16 Incon 12591-26QE-41K	14		1/26	E	26	0	4,380	1,594	N	1,594		
70	Jefferson Lincoln Elementary	Exterior	New CFL Fixture, 26 watts - Electronic, W/ Photocell Incon 32595-26QE-PC-41K	3		1/26	E	26	0	4,380	342	N	342		
71	Jefferson Lincoln Elementary	Exterior	High Pressure Sodium, 250 watts	2		1/250	M	302	1	4,380	2,646	A			2,646
72	Jefferson Lincoln Elementary	Exterior	New CFL Flood Fixture, 26 watts - Electronic Econo Incon 80595-213QE-41K	2		1/26	E	26	0	4,380	228	N	228		
73	Jefferson Lincoln Elementary	Exterior	8', 4 lamp F28T8/E, Vaportite Fixture TX FLOUR CITLB2328 LOWMV	1		4/28	E	88	0	4,380	385	N	385		
74	Jefferson Lincoln Elementary	Exterior	New CFL Fixture, 26 watts - Electronic, Ceiling Mount 16x16 Incon 12591-26QE-41K	4		1/26	E	26	0	4,380	456	N	456		
75	Jefferson Lincoln Elementary	Exterior Parking Lot	New T5HO Fixture, 4' 4 lamp, F54T5HO, Slipfitter, Pole Fixture with Sensor ESTE-1X4-	2		4/54	E	234	0	4,380	2,050	N	2,050		
76	Jefferson Lincoln Elementary	Exterior Parking Lot Floods	High Pressure Sodium, 250 watts	2		1/250	M	302	1	4,380	2,646	A			2,646
TOTAL									**23.9**		**69,829**				

Interior Locations	46.0	138,163	20.3	54,324
Exterior Locations	8.9	39,078	3.5	15,505

		Interior	Exterior
Baseline Total kWh	177,242	138,163	39,078
Baseline Total kW	55.0	46	8.9
Baseline Annual kW	659.6	552.5	107.1
		Interior	Exterior
Proposed Total kWh	69,829	54,324	15,505
Proposed Total kW	23.9	20	3.5
Proposed Annual kW	286.5	244.0	42.5
		Interior	Exterior
Savings kWh	107,413	83,840	23,573
Savings kW	31.1	25.7	5.4
Annual Savings kW	373.1	309	64.6

*** N=New Fixture; R=Retrofit with kit/component; A=As Is

Edison Elementary
Facility name

Rachael Rieken
Form completed by

Existing Lighting
Worksheet

Ln. #	Location: Loc. #	Location: Location Name (floor, room #, etc.)	Existing Lighting*: Existing Fixture Description/Model	Quantity: Ind. Wired	Quantity: Tandem Wired	Lamp Type	Lamp Watts	Ballast Type	Watts/ Unit**	Total kW	Hours/ Yr	kWh/Yr	N,R or A***	kWh/Yr Adjusted: Remove Fixture	kWh/Yr Adjusted: Retrofit with Kit/Comp.	kWh/Yr Adjusted: Remain As Is	Remarks(Lens condition, light switchings, dual switching
1	Edison Elementary	Main Office	2x4, 4 lamp, F40T12, std ballast, Surface Mount Fixture	7		F	4/34	M	147	1.029	2402	2,472	R		2471.658		
2	Edison Elementary	Main Office Hall	4 foot, 2 lamp, F40T12ES 34W, std ballast, Troffer Fixture	4		F	2/34	M	72	0.288	8760	2,523	R		2522.88		
3	Edison Elementary	Health	4 foot, 4 lamp, F40T12, std ballast, Troffer	2		F	4/34	M	147	0.294	2402	706	R		706.188		
4	Edison Elementary	Health RR	4 foot, 2 lamp, F40T12ES 34W, std ballast, Surface Mount	1		F	2/34	M	72	0.072	2402	173	R		172.944		
5	Edison Elementary	Main Office under Cabinet	4 foot, 1 lamp, F40T12ES 34W, std ballast, Strip	1		F	1/34	M	46	0.046	2402	110	R		110.492		
6	Edison Elementary	Main Office Wall mount fixtures	Incandescent 60 watt	2		I	1/60	N/A	60	0.12	2402	288	N	288.24			
7	Edison Elementary	Principal's Office	2x4, 4 lamp, F40T12, std ballast, Surface Mount Fixture	3		F	4/34	M	147	0.441	2402	1,059	R		1059.282		
8	Edison Elementary	Lunch Room	4 foot, 3 lamp, F40T12ES 34W, std ballast, Troffer	6		F	3/34	M	127	0.762	2402	1,830	R		1830.324		
9	Edison Elementary	Lunch Room under counter	4 foot, 1 lamp, F40T12ES 34W, std ballast, Strip	1		F	1/34	M	46	0.046	2402	110	R		110.492		
10	Edison Elementary	Phone Room	Incandescent 150 watt	1		I	1/150	N/A	150	0.15	2402	360	R		360.3		
11	Edison Elementary	Copier Room	4 foot, 4 lamp, F40T12, std ballast, Troffer	4		F	4/34	M	147	0.588	2402	1,412	R		1412.376		
12	Edison Elementary	Copier Room under counter	4 foot, 1 lamp, F40T12ES 34W, std ballast, Strip	7		F	1/34	M	46	0.322	2402	773	R		773.444		
13	Edison Elementary	Classroom 1	4 foot, 4 lamp, F40T12, std ballast, Troffer	17		F	4/34	M	147	2.499	2038	5,093	R		5092.962		
14	Edison Elementary	Classroom 1	4 foot, 2 lamp, F40T12ES 34W, std ballast, Surface Mount	1		F	2/34	M	72	0.072	2038	147	R		146.736		
15	Edison Elementary	Classroom 1 RR	4 foot, 2 lamp, F40T12ES 34W, std ballast, Surface Mount	1		F	2/34	M	72	0.072	2402	173	R		172.944		
16	Edison Elementary	Classroom 2	4 foot, 3 lamp, F40T12ES 34W, std ballast, Troffer	11		F	3/34	M	127	1.397	2038	2,847	R		2847.086		
17	Edison Elementary	Classroom 2	4 foot, 2 lamp, F40T12ES 34W, std ballast, Surface Mount	2		F	2/34	M	72	0.144	2038	293	R		293.472		
18	Edison Elementary	Classroom 3	4 foot, 4 lamp, F40T12, std ballast, Troffer	9		F	4/34	M	147	1.323	2038	2,696	R		2696.274		
19	Edison Elementary	Classroom 3	4 foot, 2 lamp, F40T12ES 34W, std ballast, Surface Mount	2		F	2/34	M	72	0.144	2038	293	R		293.472		
20	Edison Elementary	Classroom 4	4 foot, 4 lamp, F40T12, std ballast, Troffer	9		F	4/34	M	147	1.323	2038	2,696	R		2696.274		
21	Edison Elementary	Classroom 4	4 foot, 2 lamp, F40T12ES 34W, std ballast, Surface Mount	2		F	2/34	M	72	0.144	2038	293	R		293.472		
22	Edison Elementary	Classroom 5	4 foot, 3 lamp, F40T12ES 34W, std ballast, Troffer	12		F	3/34	M	127	1.524	2038	3,106	R		3105.912		3G Switch
23	Edison Elementary	Classroom 5	4 foot, 2 lamp, F40T12ES 34W, std ballast, Surface Mount	2		F	2/34	M	72	0.144	2038	293	R		293.472		2G Switch
24	Edison Elementary	Classroom 7	4 foot, 3 lamp, F40T12ES 34W, std ballast, Troffer	9		F	3/34	M	127	1.143	2038	2,329	R		2329.434		37-45 ftcd

Ln #	Location: Loc. #	Location: Location Name (floor, room #, etc.)	Proposed Lighting*: Proposed Fixture Description/Model	Quantity: Ind. Wired	Quantity: Tandem Wired	Lamp Type	Lamp Watts	Ballast Type	Watts/ Unit	Total kW	Hours/ Yr	kWh/ Yr	Adjmt. Factor	Enter N,R or A***	kWh/Yr Adjusted: New Fixture	kWh/Yr Adjusted: Retro. with kit/comp.	kWh/Yr Adjusted: Remain As Is
1	Edison Elementary	Main Office	4', 2 lamp, F28T8/E RW (Reduced Wattage) ballast HALCO EP232IS/L/MV/HE	7		F	2/28	E	42	0	2,402	706	1	R		706	
2	Edison Elementary	Main Office Hall	4', 2 lamp, F28T8/E RW (Reduced Wattage) ballast HALCO EP232IS/L/MV/HE	4		F	2/28	E	42	0	8,760	1,472	1	R		1,472	
3	Edison Elementary	Health	2x4' EA Troffer Kit , 2 lamp, F28T8/E HALCO EP232IS/N/MV/HE + USENERGY KTC-02B04-WA	2		F	2/28	E	48	0	2,402	231	1	R		231	
4	Edison Elementary	Health RR	4', 2 lamp, F28T8/E RW (Reduced Wattage) ballast HALCO EP232IS/L/MV/HE	1		F	2/28	E	42	0	2,402	101	1	R		101	
5	Edison Elementary	Main Office under Cabinet	4', 1 lamp, F28T8/E RW (Reduced Wattage) ballast HALCO EP232IS/L/MV/HE	1		F	1/28	E	22	0	2,402	53	1	R		53	
6	Edison Elementary	Main Office Wall mount fixtures	New CFL Fixture, 1-13 watts - Electronic, Wall Mount INCON 31591-13QE-41K	2		CF	1/13	E	13	0	2,402	62	1	N	62		
7	Edison Elementary	Principal's Office	4', 2 lamp, F28T8/E RW (Reduced Wattage) ballast HALCO EP232IS/L/MV/HE	3		F	2/28	E	42	0	2,402	303	1	R		303	
8	Edison Elementary	Lunch Room	2x4' EA Troffer Kit , 2 lamp, F28T8/E HALCO EP232IS/N/MV/HE + USENERGY KTC-02B04-WA	6		F	2/28	E	48	0	2,402	692	1	R		692	
9	Edison Elementary	Lunch Room under counter	4', 1 lamp, F28T8/E RW (Reduced Wattage) ballast HALCO EP232IS/L/MV/HE	1		F	1/28	E	22	0	2,402	53	1	R		53	
10	Edison Elementary	Phone Room	23watt CFL, Screwin TCP 28923	1		CF	1/23		23	0	2,402	55	1	R		55	
11	Edison Elementary	Copier Room	2x4' EA Troffer Kit , 2 lamp, F28T8/E HALCO EP232IS/N/MV/HE + USENERGY KTC-02B04-WA	4		F	2/28	E	48	0	2,402	461	1	R		461	
12	Edison Elementary	Copier Room under counter	4', 1 lamp, F28T8/E RW (Reduced Wattage) ballast HALCO EP232IS/L/MV/HE	7		F	1/28	E	22	0	2,402	370	1	R		370	
13	Edison Elementary	Classroom 1	2x4' EA Troffer Kit , 2 lamp, F28T8/E HALCO EP232IS/N/MV/HE + USENERGY KTC-02B04-WA	17		F	2/28	E	48	1	2,038	1,663	1	R		1,663	
14	Edison Elementary	Classroom 1	4', 2 lamp, F28T8/E RW (Reduced Wattage) ballast HALCO EP232IS/L/MV/HE	1		F	2/28	E	42	0	2,038	86	1	R		86	
15	Edison Elementary	Classroom 1 RR	4', 2 lamp, F28T8/E RW (Reduced Wattage) ballast HALCO EP232IS/L/MV/HE	1		F	2/28	E	42	0	2,402	101	1	R		101	
16	Edison Elementary	Classroom 2	2x4' EA Troffer Kit , 2 lamp, F28T8/E HALCO EP232IS/N/MV/HE + USENERGY KTC-02B04-WA	11		F	2/28	E	48	1	2,038	1,076	1	R		1,076	
17	Edison Elementary	Classroom 2	8', 4 lamp, F28T8/E RLO Tandem HALCO EP432IS/L/MV/HE		1	F	4/28	E	84	0	2,038	171	1	R		171	
18	Edison Elementary	Classroom 3	2x4' EA Troffer Kit , 2 lamp, F28T8/E HALCO EP232IS/N/MV/HE + USENERGY KTC-02B04-WA	9		F	2/28	E	48	0	2,038	880	1	R		880	
19	Edison Elementary	Classroom 3	8', 4 lamp, F28T8/E RLO Tandem HALCO EP432IS/L/MV/HE		1	F	4/28	E	84	0	2,038	171	1	R		171	
20	Edison Elementary	Classroom 4	2x4' EA Troffer Kit , 2 lamp, F28T8/E HALCO EP232IS/N/MV/HE + USENERGY KTC-02B04-WA	9		F	2/28	E	48	0	2,038	880	1	R		880	
21	Edison Elementary	Classroom 4	8', 4 lamp, F28T8/E RLO Tandem HALCO EP432IS/L/MV/HE		1	F	4/28	E	84	0	2,038	171	1	R		171	
22	Edison Elementary	Classroom 5	2x4' EA Troffer Kit , 2 lamp, F28T8/E HALCO EP232IS/N/MV/HE + USENERGY KTC-02B04-WA	12		F	2/28	E	48	1	2,038	1,174	1	R		1,174	
23	Edison Elementary	Classroom 5	8', 4 lamp, F28T8/E RLO Tandem HALCO EP432IS/L/MV/HE		1	F	4/28	E	84	0	2,038	171	1	R		171	
24	Edison Elementary	Classroom 7	2x4' EA Troffer Kit , 2 lamp, F28T8/E HALCO EP232IS/N/MV/HE + USENERGY KTC-02B04-WA	9		F	2/28	E	48	0	2,038	880	1	R		880	

Edison Elementary
Facility name

Rachael Rieken
Form completed by

Existing Lighting
Worksheet

	Location			Existing Lighting*														
				Quantity										kWh/Yr Adjusted				
Ln. #	Loc. #	Location Name (floor, room #, etc.)	Existing Fixture Description/Model	Ind. Wired	Tandem Wired	Lamp Type	Lamp Watts	Ballast Type	Watts/ Unit**	Total kW	Hours/ Yr	kWh/Yr	N,R or A***	Remove Fixture	Retrofit with Kit/Comp.	Remain As Is	Remarks(Lens condition, light switchings, dual switching
25	Edison Elementary	Classroom 6	4 foot, 4 lamp, F40T12, std ballast, Troffer	9		F	4/34	M	147	1.323	2038	2,696	R		2696.274		3G Switch
26	Edison Elementary	Classroom 6	4 foot, 2 lamp, F40T12ES 34W, std ballast, Surface Mount	2		F	2/34	M	72	0.144	2038	293	R		293.472		33-43 ftcd
27	Edison Elementary	Custodian Closet 1 & 2	4 foot, 2 lamp, F40T12ES 34W, std ballast, Reflector Fixture	2		F	2/34	M	72	0.144	1460	210	R		210.24		
28	Edison Elementary	Restroom common area cove	4 foot, 1 lamp, F40T12ES 34W, std ballast, Strip	6		F	1/34	M	46	0.276	2402	663	R		662.952		
29	Edison Elementary	Restroom common area cove	4 foot, 1 lamp, F40T12ES 34W, std ballast, Strip	1		F	1/34	M	46	0.046	2402	110	R		110.492		
30	Edison Elementary	Boys Restroom	4 foot, 2 lamp, F40T12ES 34W, std ballast, Surface Mount	4		F	2/34	M	72	0.288	2402	692	R		691.776		
31	Edison Elementary	Boys Restroom	4 foot, 2 lamp, F40T12ES 34W, std ballast, w/ Battery Ballast	2		F	2/34	M	72	0.144	8760	1,261	R		1261.44		
32	Edison Elementary	Girls Restroom	4 foot, 2 lamp, F40T12ES 34W, std ballast, Surface Mount	4		F	2/34	M	72	0.288	2402	692	R		691.776		
33	Edison Elementary	Girls Restroom	4 foot, 2 lamp, F40T12ES 34W, std ballast, w/ Battery Ballast	2		F	2/34	M	72	0.144	8760	1,261	R		1261.44		
34	Edison Elementary	Mens Restroom	4 foot, 2 lamp, F40T12ES 34W, std ballast, Surface Mount	2		F	2/34	M	72	0.144	2402	346	R		345.888		
35	Edison Elementary	Mens Restroom	4 foot, 2 lamp, F40T12ES 34W, std ballast, w/ Battery Ballast	1		F	2/34	M	72	0.072	8760	631	R		630.72		
36	Edison Elementary	Womens Restroom	4 foot, 2 lamp, F40T12ES 34W, std ballast, Surface Mount	2		F	2/34	M	72	0.144	2402	346	R		345.888		
37	Edison Elementary	Womens Restroom	4 foot, 2 lamp, F40T12ES 34W, std ballast, w/ Battery Ballast	1		F	2/34	M	72	0.072	8760	631	R		630.72		
38	Edison Elementary	Back Hall to Boys/Girls RR	2x4, 4 lamp, F40T12, std ballast, Surface Mount Fixture	3		F	4/34	M	147	0.441	2402	1,059	R		1059.282		
39	Edison Elementary	Kitchen	4 foot, 3 lamp, F40T12ES 34W, std ballast, Troffer	7		F	3/34	M	127	0.889	1822	1,620	R		1619.758		
40	Edison Elementary	Kitchen	4 foot, 3 lamp, F40T12ES 34W, std ballast, Troffer w/ Battery Ballast	1		F	3/34	M	127	0.127	1822	231	R		231.394		
41	Edison Elementary	Kitchen Range Hood	Incandescent 60 watt	6		I	1/60	N/A	60	0.36	1822	656	R		655.92		
42	Edison Elementary	Main Foyer	Incandescent 100 watt, Globe	6		I	1/100	N/A	200	1.2	2402	2,882	R		2882.4		
43	Edison Elementary	Main Foyer	4 foot, 2 lamp, F40T12ES 34W, std ballast, w/ Battery Ballast	2		F	2/34	M	72	0.144	8760	1,261	R		1261.44		
44	Edison Elementary	Main Foyer	4 foot, 2 lamp, F40T12ES 34W, std ballast, Surface Mount	2		F	2/34	M	72	0.144	2402	346	R		345.888		
45	Edison Elementary	Multi Purpose Room	2x4, 4 lamp, F40T12, std ballast, Surface Mount Fixture	28		F	4/34	M	147	4.116	2402	9,887	R		9886.632		26ft Scissor Lift
46	Edison Elementary	Multi Purpose Room	4 foot, 4 lamp, F40T12, std ballast, Troffer w/ Battery Ballast	2		F	4/34	M	147	0.294	8760	2,575	R		2575.44		
47	Edison Elementary	Choir Storage	4 foot, 2 lamp, F40T12ES 34W, std ballast, Reflector Fixture	5		F	2/34	M	72	0.36	2920	1,051	R		1051.2		
48	Edison Elementary	Gym Storage	4 foot, 2 lamp, F40T12ES 34W, std ballast, Reflector Fixture	2		F	2/34	M	72	0.144	2920	420	R		420.48		

	Location			Proposed Lighting*												
				Quantity									Enter	kWh/Yr Adjusted		
Ln #	Loc. #	Location Name (floor, room #, etc.)	Proposed Fixture Description/Model	Ind. Wired	Tandem Wired	Lamp Type	Lamp Watts	Ballast Type	Watts/ Unit	Total kW	Hours/ Yr	kWh/ Yr	Adjmt. Factor	N,R or A***	New Fixture	Retro. with kit/comp.	Remain As Is
25	Edison Elementary	Classroom 6	2x4' EA Troffer Kit , 2 lamp, F28T8/E HALCO EP232IS/N/MV/HE + USENERGY KTC-02B04-WA	9		F	2/28	E	48	0	2,038	880	1	R		880	
26	Edison Elementary	Classroom 6	8', 4 lamp, F28T8/E RLO Tandem HALCO EP432IS/L/MV/HE		1	F	4/28	E	84	0	2,038	171	1	R		171	
27	Edison Elementary	Custodian Closet 1 & 2	4', 2 lamp, F28T8/E RW (Reduced Wattage) ballast HALCO EP232IS/L/MV/HE	2		F	2/28	E	42	0	1,460	123	1	R		123	
28	Edison Elementary	Restroom common area cove	4', 2 lamp, F28T8/E RW (Reduced Wattage) ballast HALCO EP232IS/L/MV/HE		3	F	2/28	E	42	0	2,402	303	1	R		303	
29	Edison Elementary	Restroom common area cove	4', 1 lamp, F28T8/E RW (Reduced Wattage) ballast HALCO EP232IS/L/MV/HE	1		F	1/28	E	22	0	2,402	53	1	R		53	
30	Edison Elementary	Boys Restroom	4', 2 lamp, F28T8/E RW (Reduced Wattage) ballast HALCO EP232IS/L/MV/HE	4		F	2/28	E	42	0	2,402	404	1	R		404	
31	Edison Elementary	Boys Restroom	4', 2 lamp, F28T8/E RW (Reduced Wattage) ballast with Battery Ballast HALCO EP232IS/L/MV/HE+BATTERY	2		F	2/28	E	42	0	8,760	736	1	R		736	
32	Edison Elementary	Girls Restroom	4', 2 lamp, F28T8/E RW (Reduced Wattage) ballast HALCO EP232IS/L/MV/HE	4		F	2/28	E	42	0	2,402	404	1	R		404	
33	Edison Elementary	Girls Restroom	4', 2 lamp, F28T8/E RW (Reduced Wattage) ballast with Battery Ballast HALCO EP232IS/L/MV/HE+BATTERY	2		F	2/28	E	42	0	8,760	736	1	R		736	
34	Edison Elementary	Mens Restroom	4', 2 lamp, F28T8/E RW (Reduced Wattage) ballast HALCO EP232IS/L/MV/HE	2		F	2/28	E	42	0	2,402	202	1	R		202	
35	Edison Elementary	Mens Restroom	4', 2 lamp, F28T8/E RW (Reduced Wattage) ballast with Battery Ballast HALCO EP232IS/L/MV/HE+BATTERY	1		F	2/28	E	42	0	8,760	368	1	R		368	
36	Edison Elementary	Womens Restroom	4', 2 lamp, F28T8/E RW (Reduced Wattage) ballast HALCO EP232IS/L/MV/HE	2		F	2/28	E	42	0	2,402	202	1	R		202	
37	Edison Elementary	Womens Restroom	4', 2 lamp, F28T8/E RW (Reduced Wattage) ballast with Battery Ballast HALCO EP232IS/L/MV/HE+BATTERY	1		F	2/28	E	42	0	8,760	368	1	R		368	
38	Edison Elementary	Back Hall to Boys/Girls RR	2x4' EA Troffer Kit , 2 lamp, F28T8/E HALCO EP232IS/N/MV/HE + USENERGY KTC-02B04-WA	3		F	2/28	E	48	0	2,402	346	1	R		346	
39	Edison Elementary	Kitchen	2x4' EA Troffer Kit , 2 lamp, F28T8/E HALCO EP232IS/N/MV/HE + USENERGY KTC-02B04-WA	7		F	2/28	E	48	0	1,822	612	1	R		612	
40	Edison Elementary	Kitchen	2x4' EA Troffer Kit , 2 lamp, F28T8/E w/ Battery Ballast HALCO EP232IS/N/MV/HE + USENERGY	1		F	2/28	E	48	0	1,822	87	1	R		87	
41	Edison Elementary	Kitchen Range Hood	23watt CFL, Screwin TCP 28923	6		CF	1/23		23	0	1,822	251	1	R		251	
42	Edison Elementary	Main Foyer	32 watt Screw In,	6		CF	1/32	E	32	0	2,402	461	1	R		461	
43	Edison Elementary	Main Foyer	4', 2 lamp, F28T8/E RW (Reduced Wattage) ballast with Battery Ballast HALCO EP232IS/L/MV/HE+BATTERY	2		F	2/28	E	42	0	8,760	736	1	R		736	
44	Edison Elementary	Main Foyer	4', 2 lamp, F28T8/E RW (Reduced Wattage) ballast HALCO EP232IS/L/MV/HE	1		F	2/28	E	42	0	2,402	101	1	R		101	
45	Edison Elementary	Multi Purpose Room	8', 4 lamp, F28T8/E RLO Tandem HALCO EP432IS/L/MV/HE	24		F	4/28	E	84	2	2,402	4,842	1	R		4,842	
46	Edison Elementary	Multi Purpose Room	8', 4 lamp, F28T8/E RLO Tandem, with Battery Ballast HALCO EP432IS/L/MV/HE+ BATTERY	6		F	4/28	E	84	1	8,760	4,415	1	R		4,415	
47	Edison Elementary	Choir Storage	4', 2 lamp, F28T8/E RW (Reduced Wattage) ballast HALCO EP232IS/L/MV/HE	5		F	2/28	E	42	0	2,920	613	1	R		613	
48	Edison Elementary	Gym Storage	4', 2 lamp, F28T8/E RW (Reduced Wattage) ballast HALCO EP232IS/L/MV/HE	2		F	2/28	E	42	0	2,920	245	1	R		245	

Edison Elementary
Facility name

Rachael Rieken
Form completed by

Existing Lighting
Worksheet

	Location			Existing Lighting*														
				Quantity										kWh/Yr Adjusted				
Ln. #	Loc. #	Location Name (floor, room #, etc.)	Existing Fixture Description/Model	Ind. Wired	Tandem Wired	Lamp Type	Lamp Watts	Ballast Type	Watts/ Unit**	Total kW	Hours/ Yr	kWh/Yr	N,R or A***	Remove Fixture	Retrofit with Kit/Comp.	Remain As Is	Remarks(Lens condition, light switchings, dual switching
49	Edison Elementary	Classroom Computer	4 foot, 4 lamp, F40T12, std ballast, Troffer	12		F	4/34	M	147	1.764	2038	3,595	R		3595.032		19ft Scissor Lift
50	Edison Elementary	Counselor Office	4 foot, 3 lamp, F40T12ES 34W, std ballast, Troffer	3		F	3/34	M	127	0.381	2402	915	R		915.162		
51	Edison Elementary	Stairs to upper loft	4 foot, 2 lamp, F40T12ES 34W, std ballast, Surface Mount	1		F	2/34	M	72	0.072	8760	631	R		630.72		
52	Edison Elementary	Stairs to Boiler Room	4 foot, 2 lamp, F40T12ES 34W, std ballast, Surface Mount	2		F	2/34	M	72	0.144	8760	1,261	R		1261.44		
53	Edison Elementary	Boiler Room	4 foot, 2 lamp, F40T12ES 34W, std ballast, Reflector Fixture	8		F	2/34	M	72	0.576	1460	841	R		840.96		
54	Edison Elementary	Boiler Room	4 foot, 2 lamp, F40T12ES 34W, std ballast, Reflector Fixture	6		F	2/34	M	72	0.432	1460	631	R		630.72		
55	Edison Elementary	Boiler Room Storage	2x4, 4 lamp, F40T12, std ballast, Surface Mount Fixture	7		F	4/34	M	147	1.029	2920	3,005	R		3004.68		
56	Edison Elementary	Library	4 foot, 3 lamp, F40T12ES 34W, std ballast, Troffer	22		F	3/34	M	127	2.794	2402	6,711	R		6711.188		
57	Edison Elementary	Library	4 foot, 3 lamp, F40T12ES 34W, std ballast, Troffer w/ Battery Ballast	1		F	3/34	M	127	0.127	2402	305	R		305.054		
58	Edison Elementary	Library under counter	4 foot, 1 lamp, F40T12ES 34W, std ballast, Strip	2		F	1/34	M	46	0.092	2402	221	R		220.984		
59	Edison Elementary	Library Work Room	4 foot, 3 lamp, F40T12ES 34W, std ballast, Troffer	4		F	3/34	M	127	0.508	2402	1,220	R		1220.216		
60	Edison Elementary	Library Conference Room	4 foot, 4 lamp, F40T12, std ballast, Troffer	2		F	4/34	M	147	0.294	2402	706	R		706.188		
61	Edison Elementary	Classroom 8	4 foot, 4 lamp, F40T12, std ballast, Troffer	6		F	4/34	M	147	0.882	2038	1,798	R		1797.516		
62	Edison Elementary	Classromm 10	4 foot, 4 lamp, F40T12, std ballast, Troffer	9		F	4/34	M	147	1.323	2038	2,696	R		2696.274		
63	Edison Elementary	Classromm 12	4 foot, 4 lamp, F40T12, std ballast, Troffer	9		F	4/34	M	147	1.323	2038	2,696	R		2696.274		
64	Edison Elementary	Classromm 12	4 foot, 2 lamp, F40T12ES 34W, std ballast, Surface Mount	2		F	2/34	M	72	0.144	2038	293	R		293.472		
65	Edison Elementary	Common Area Restroom	4 foot, 1 lamp, F40T12ES 34W, std ballast, Strip	6		F	1/34	M	46	0.276	2402	663	R		662.952		
66	Edison Elementary	Common Area Restroom	4 foot, 1 lamp, F40T12ES 34W, std ballast, Strip	1		F	1/34	M	46	0.046	2402	110	R		110.492		
67	Edison Elementary	Boys/ Girls RR	4 foot, 2 lamp, F40T12ES 34W, std ballast, Surface Mount	8		F	2/34	M	72	0.576	2402	1,384	R		1383.552		
68	Edison Elementary	Boys/ Girls RR	4 foot, 2 lamp, F40T12ES 34W, std ballast, w/ Battery Ballast	2		F	2/34	M	72	0.144	8760	1,261	R		1261.44		
69	Edison Elementary	Custodial	4 foot, 2 lamp, F40T12ES 34W, std ballast, Reflector Fixture	2		F	2/34	M	72	0.144	1460	210	R		210.24		
70	Edison Elementary	Classroom 11	4 foot, 3 lamp, F40T12ES 34W, std ballast, Troffer	11		F	3/34	M	127	1.397	2038	2,847	R		2847.086		
71	Edison Elementary	Classroom 11	4 foot, 2 lamp, F40T12ES 34W, std ballast, Surface Mount	2		F	2/34	M	72	0.144	2038	293	R		293.472		
72	Edison Elementary	Classroom 13	4 foot, 4 lamp, F40T12, std ballast, Troffer	9		F	4/34	M	147	1.323	2038	2,696	R		2696.274		

	Location			Proposed Lighting*													
				Quantity										Enter	kWh/Yr Adjusted		
Ln #	Loc. #	Location Name (floor, room #, etc.)	Proposed Fixture Description/Model	Ind. Wired	Tandem Wired	Lamp Type	Lamp Watts	Ballast Type	Watts/ Unit	Total kW	Hours/ Yr	kWh/ Yr	Adjmt. Factor	N,R or A***	New Fixture	Retro. with kit/comp.	Remain As Is
49	Edison Elementary	Classroom Computer	8', 4 lamp, F28T8/E RLO Tandem HALCO EP432IS/L/MV/HE	12		F	4/28	E	84	1	2,038	2,054	1	R		2,054	
50	Edison Elementary	Counselor Office	2x4' EA Troffer Kit , 2 lamp, F28T8/E HALCO EP232IS/N/MV/HE + USENERGY KTC-02B04-WA	3		F	2/28	E	48	0	2,402	346	1	R		346	
51	Edison Elementary	Stairs to upper loft	4', 2 lamp, F28T8/E RW (Reduced Wattage) ballast HALCO EP232IS/L/MV/HE	1		F	2/28	E	42	0	8,760	368	1	R		368	
52	Edison Elementary	Stairs to Boiler Room	4', 2 lamp, F28T8/E RW (Reduced Wattage) ballast HALCO EP232IS/L/MV/HE	2		F	2/28	E	42	0	8,760	736	1	R		736	
53	Edison Elementary	Boiler Room	8', 4 lamp, F28T8/E RLO Tandem HALCO EP432IS/L/MV/HE	8		F	4/28	E	84	1	1,460	981	1	R		981	
54	Edison Elementary	Boiler Room	4', 2 lamp, F28T8/E RW (Reduced Wattage) ballast HALCO EP232IS/L/MV/HE	6		F	2/28	E	42	0	1,460	368	1	R		368	
55	Edison Elementary	Boiler Room Storage	2x4' EA Troffer Kit , 2 lamp, F28T8/E HALCO EP232IS/N/MV/HE + USENERGY KTC-02B04-WA	7		F	2/28	E	48	0	2,920	981	1	R		981	
56	Edison Elementary	Library	2x4' EA Troffer Kit , 2 lamp, F28T8/E HALCO EP232IS/N/MV/HE + USENERGY KTC-02B04-WA	22		F	2/28	E	48	1	2,402	2,537	1	R		2,537	
57	Edison Elementary	Library	2x4' EA Troffer Kit , 2 lamp, F28T8/E w/ Battery Ballast HALCO EP232IS/N/MV/HE + USENERGY	1		F	2/28	E	48	0	2,402	115	1	R		115	
58	Edison Elementary	Library under counter	4', 2 lamp, F28T8/E RW (Reduced Wattage) ballast HALCO EP232IS/L/MV/HE		1	F	2/28	E	42	0	2,402	101	1	R		101	
59	Edison Elementary	Library Work Room	2x4' EA Troffer Kit , 2 lamp, F28T8/E HALCO EP232IS/N/MV/HE + USENERGY KTC-02B04-WA	4		F	2/28	E	48	0	2,402	461	1	R		461	
60	Edison Elementary	Library Conference Room	2x4' EA Troffer Kit , 2 lamp, F28T8/E HALCO EP232IS/N/MV/HE + USENERGY KTC-02B04-WA	2		F	2/28	E	48	0	2,402	231	1	R		231	
61	Edison Elementary	Classroom 8	2x4' EA Troffer Kit , 2 lamp, F28T8/E HALCO EP232IS/N/MV/HE + USENERGY KTC-02B04-WA	6		F	2/28	E	48	0	2,038	587	1	R		587	
62	Edison Elementary	Classromm 10	2x4' EA Troffer Kit , 2 lamp, F28T8/E HALCO EP232IS/N/MV/HE + USENERGY KTC-02B04-WA	9		F	2/28	E	48	0	2,038	880	1	R		880	
63	Edison Elementary	Classromm 12	2x4' EA Troffer Kit , 2 lamp, F28T8/E HALCO EP232IS/N/MV/HE + USENERGY KTC-02B04-WA	9		F	2/28	E	48	0	2,038	880	1	R		880	
64	Edison Elementary	Classromm 12	8', 4 lamp, F28T8/E RLO Tandem HALCO EP432IS/L/MV/HE		1	F	4/28	E	84	0	2,038	171	1	R		171	
65	Edison Elementary	Common Area Restroom	4', 2 lamp, F28T8/E RW (Reduced Wattage) ballast HALCO EP232IS/L/MV/HE		3	F	2/28	E	42	0	2,402	303	1	R		303	
66	Edison Elementary	Common Area Restroom	4', 2 lamp, F28T8/E RW (Reduced Wattage) ballast HALCO EP232IS/L/MV/HE	1		F	2/28	E	42	0	2,402	101	1	R		101	
67	Edison Elementary	Boys/ Girls RR	8', 4 lamp, F28T8/E RLO Tandem HALCO EP432IS/L/MV/HE		4	F	4/28	E	84	0	2,402	807	1	R		807	
68	Edison Elementary	Boys/ Girls RR	4', 2 lamp, F28T8/E RW (Reduced Wattage) ballast with Battery Ballast HALCO EP232IS/L/MV/HE+BATTERY	2		F	2/28	E	42	0	8,760	736	1	R		736	
69	Edison Elementary	Custodial	8', 4 lamp, F28T8/E RLO Tandem HALCO EP432IS/L/MV/HE	2		F	4/28	E	84	0	1,460	245	1	R		245	
70	Edison Elementary	Classroom 11	2x4' EA Troffer Kit , 2 lamp, F28T8/E HALCO EP232IS/N/MV/HE + USENERGY KTC-02B04-WA	11		F	2/28	E	48	1	2,038	1,076	1	R		1,076	
71	Edison Elementary	Classroom 11	8', 4 lamp, F28T8/E RLO Tandem HALCO EP432IS/L/MV/HE		1	F	4/28	E	84	0	2,038	171	1	R		171	
72	Edison Elementary	Classroom 13	2x4' EA Troffer Kit , 2 lamp, F28T8/E HALCO EP232IS/N/MV/HE + USENERGY KTC-02B04-WA	9		F	2/28	E	48	0	2,038	880	1	R		880	

Edison Elementary
Facility name

Rachael Rieken
Form completed by

Existing Lighting
Worksheet

	Location			Existing Lighting*														
				Quantity										kWh/Yr Adjusted				
Ln. #	Loc. #	Location Name (floor, room #, etc.)	Existing Fixture Description/Model	Ind. Wired	Tandem Wired	Lamp Type	Lamp Watts	Ballast Type	Watts/ Unit**	Total kW	Hours/ Yr	kWh/Yr	N,R or A***	Remove Fixture	Retrofit with Kit/Comp.	Remain As Is	Remarks(Lens condition, light switchings, dual switching
73	Edison Elementary	Classroom 13	4 foot, 2 lamp, F40T12ES 34W, std ballast, Surface Mount	2		F	2/34	M	72	0.144	2038	293	R		293.472		
74	Edison Elementary	Classroom 14	4 foot, 3 lamp, F40T12ES 34W, std ballast, Troffer	11		F	3/34	M	127	1.397	2038	2,847	R		2847.086		
75	Edison Elementary	Classroom 14	4 foot, 2 lamp, F40T12ES 34W, std ballast, Surface Mount	2		F	2/34	M	72	0.144	2038	293	R		293.472		
76	Edison Elementary	Classroom 15	4 foot, 3 lamp, F40T12ES 34W, std ballast, Troffer	11		F	3/34	M	127	1.397	2038	2,847	R		2847.086		
77	Edison Elementary	Classroom 15	4 foot, 2 lamp, F40T12ES 34W, std ballast, Surface Mount	2		F	2/34	M	72	0.144	2038	293	R		293.472		
78	Edison Elementary	Hall Storage by Classroom 15	4 foot, 2 lamp, F40T12ES 34W, std ballast, Reflector Fixture	2		F	2/34	M	72	0.144	2920	420	R		420.48		
79	Edison Elementary	Hallways	4 foot, 3 lamp, F40T12ES 34W, std ballast, Troffer	23		F	3/34	M	127	2.921	8760	25,588	R		25587.96		
80	Edison Elementary	Hallways	4 foot, 3 lamp, F40T12ES 34W, std ballast, Troffer w/ Battery Ballast	8		F	3/34	M	127	1.016	8760	8,900	R		8900.16		
81	Edison Elementary	Potable 2	4 foot, 3 lamp, F40T12ES 34W, std ballast, Troffer	9		F	3/34	M	127	1.143	2038	2,329	R		2329.434		
82	Edison Elementary	Portable 1	4 foot, 3 lamp, F40T12ES 34W, std ballast, Troffer	9		F	3/34	M	127	1.143	2038	2,329	R		2329.434		
83	Edison Elementary	Exterior Portables	High Pressure Sodium, 150 watts	1		HPS	1/150	M	173	0.173	4380	758	N	757.74			
84	Edison Elementary	Exterior Wall Packs	Mercury Vapor, 175 watts	3		MV	1/175	M	197	0.591	4380	2,589	N	2588.58			
85	Edison Elementary	Exterior Recessed	Mercury Vapor, 175 watts	11		MV	1/175	M	197	2.167	4380	9,491	N	9491.46			
86	Edison Elementary	Play Shed	Metal halide , 175 watts	10		MH	1/175	M	210	2.1	4380	9,198	N	9198			
87	Edison Elementary	Exterior Poles	High Pressure Sodium, 400 watts	5		HPS	1/400	M	469	2.345	4380	10,271	N	10271.1			
88	Edison Elementary	Flag Light	Metal halide , 175 watts	1		MH	1/175	M	210	0.21	4380	920	A			919.8	
TOTAL					**465**					**58.6**		**180,263**					

	Location			Proposed Lighting*													
				Quantity										Enter	kWh/Yr Adjusted		
Ln #	Loc. #	Location Name (floor, room #, etc.)	Proposed Fixture Description/Model	Ind. Wired	Tandem Wired	Lamp Type	Lamp Watts	Ballast Type	Watts/ Unit	Total kW	Hours/ Yr	kWh/ Yr	Adjmt. Factor	N,R or A***	New Fixture	Retro. with kit/comp.	Remain As Is
73	Edison Elementary	Classroom 13	8', 4 lamp, F28T8/E RLO Tandem HALCO EP432IS/L/MV/HE		1	F	4/28	E	84	0	2,038	171	1	R		171	
74	Edison Elementary	Classroom 14	2x4' EA Troffer Kit , 2 lamp, F28T8/E HALCO EP232IS/N/MV/HE + USENERGY KTC-02B04-WA	11		F	2/28	E	48	1	2,038	1,076	1	R		1,076	
75	Edison Elementary	Classroom 14	8', 4 lamp, F28T8/E RLO Tandem HALCO EP432IS/L/MV/HE		1	F	4/28	E	84	0	2,038	171	1	R		171	
76	Edison Elementary	Classroom 15	2x4' EA Troffer Kit , 2 lamp, F28T8/E HALCO EP232IS/N/MV/HE + USENERGY KTC-02B04-WA	11		F	2/28	E	48	1	2,038	1,076	1	R		1,076	
77	Edison Elementary	Classroom 15	8', 4 lamp, F28T8/E RLO Tandem HALCO EP432IS/L/MV/HE		1	F	4/28	E	84	0	2,038	171	1	R		171	
78	Edison Elementary	Hall Storage by Classroom 15	4', 2 lamp, F28T8/E RW (Reduced Wattage) ballast HALCO EP232IS/L/MV/HE	2		F	2/28	E	42	0	2,920	245	1	R		245	
79	Edison Elementary	Hallways	2x4' EA Troffer Kit , 2 lamp, F28T8/E HALCO EP232IS/N/MV/HE + USENERGY KTC-02B04-WA	23		F	2/28	E	48	1	8,760	9,671	1	R		9,671	
80	Edison Elementary	Hallways	2x4' EA Troffer Kit , 2 lamp, F28T8/E w/ Battery Ballast HALCO EP232IS/N/MV/HE + USENERGY	8		F	2/28	E	48	0	8,760	3,364	1	R		3,364	
81	Edison Elementary	Potable 2	2x4' EA Troffer Kit , 2 lamp, F28T8/E HALCO EP232IS/N/MV/HE + USENERGY KTC-02B04-WA	9		F	2/28	E	48	0	2,038	880	1	R		880	
82	Edison Elementary	Portable 1	2x4' EA Troffer Kit , 2 lamp, F28T8/E HALCO EP232IS/N/MV/HE + USENERGY KTC-02B04-WA	9		F	2/28	E	48	0	2,038	880	1	R		880	
83	Edison Elementary	Exterior Portables	New CFL Fixture, 1-42 watts - Electronic, Wallpack INCON 32595-32TT-41K	1		CF	1/42	E	42	0	4,380	184	1	N	184		
84	Edison Elementary	Exterior Wall Packs	New CFL Fixture, 2-42 watts - Electronic, Wallpack INCON 31493B-84TT-41K	3		CF	2/42	E	84	0	4,380	1,104	1	N	1,104		
85	Edison Elementary	Exterior Recessed	New CFL Fixture, 2-32 watts - Electronic Ceiling Mount Fixture 18x18 INCON 76793B-64TT-41K	11		CF	2/32	E	64	1	4,380	3,084	1	N	3,084		
86	Edison Elementary	Play Shed	New Vaportite Fixture T8 Fixture, 4', 2 lamp F32T8/E TX FLOUR CITLB232MV	10		F	2/32	E	60	1	4,380	2,628	1	N	2,628		
87	Edison Elementary	Exterior Poles	New T5HO Fixture, 4' 4 lamp, F54T5HO, Slipfitter, Pole Fixture with Sensor ESTE-1X4-4L-T5HO-UL1-MN-	5		F	4/54	E	234	1	4,380	5,125	1	N	5,125		
88	Edison Elementary	Flag Light	Metal halide , 175 watts	1		MH	1/175	M	210	0	4,380	920	1	A			920
TOTAL										**24.1**		**76,510**					

Interior Locations	51.1	147,036
Exterior Locations	7.6	33,227
	21.1	63,466
	3.0	13,044

		Interior	Exterior
Baseline Total kWh	180,263	147,036	33,227
Baseline Total kW	58.6	51	7.6
Baseline Annual kW	703.8	612.8	91.0
		Interior	Exterior

Edison Elementary
Facility name

Rachael Rieken
Form completed by

Existing Lighting
Worksheet

Ln. #	Location: Loc. #	Location: Location Name (floor, room #, etc.)	Existing Lighting*: Existing Fixture Description/Model	Quantity: Ind. Wired	Quantity: Tandem Wired	Lamp Type	Lamp Watts	Ballast Type	Watts/ Unit**	Total kW	Hours/ Yr	kWh/Yr	N,R or A***	kWh/Yr Adjusted: Remove Fixture	kWh/Yr Adjusted: Retrofit with Kit/Comp.	kWh/Yr Adjusted: Remain As Is	Remarks(Lens condition, light switchings, dual switching

Proposed Total kWh	76,510	63,466	13,044
Proposed Total kW	24.1	21	3.0
Proposed Annual kW	289.5	253.7	35.7
		Interior	Exterior
Savings kWh	103,753	83,570	20,183
Savings kW	34.5	29.9	4.6
	414.3	359	55.3

*** N=New Fixture; R=Retrofit with kit/component; A=As Is

Ln #	Location: Loc. #	Location: Location Name (floor, room #, etc.)	Proposed Lighting*: Proposed Fixture Description/Model	Quantity: Ind. Wired	Quantity: Tandem Wired	Lamp Type	Lamp Watts	Ballast Type	Watts/ Unit	Total kW	Hours/ Yr	kWh/ Yr	Adjmt. Factor	Enter N,R or A***	kWh/Yr Adjusted: New Fixture	kWh/Yr Adjusted: Retro. with kit/comp.	kWh/Yr Adjusted: Remain As Is

Centralia High School
Facility name

Rachael Rieken
Form completed by

	Location		Existing Lighting*														
				Quantity											kWh/Yr Adjusted		
Ln. #	Loc. #	Location Name (floor, room #, etc.)	Existing Fixture Description/Model	Ind. Wired	Tandem Wired	Lamp Type	Lamp Watts	Ballast Type	Watts/ Unit**	Total kW	Hours/ Yr	kWh/Yr	N,R or A***	Remove Fixture	Retrofit with Kit/Comp.	Remain As Is
1	ralia High Sc	Electrical Room by Gym	Incandescent 200 watt	1		I	1/200	N/A	200	0.2	1458	292	N	291.6		
2	ralia High Sc	Hall to Locker Rooms	4 foot, 1 lamp, F40T12ES 34W, std ballast, Wrap	8		F	1/34	M	46	0.368	8760	3,224	R		3223.68	
3	ralia High Sc	Hall to Locker Rooms	4 foot, 2 lamp, F40T12ES 34W, std ballast, Wrap	1		F	2/34	M	72	0.072	8760	631	R		630.72	
4	ralia High Sc	Hall to Locker Rooms	Incandescent Exit Sign Fixture 2-15 Watt	1		I	2/15	N/A	30	0.03	8760	263	N	262.8		
5	ralia High Sc	Hall to Locker Rooms	2 lamp, 4', F32T8 Electronic ballast	8		F	2/32	E	60	0.48	8760	4,205	A			4204.8
6	ralia High Sc	Soccer Storage Room	4 foot, 2 lamp, F40T12ES 34W, std ballast, Surface Mount	2		F	2/34	M	72	0.144	2920	420	R		420.48	
7	ralia High Sc	Storage by Gym #1	4 foot, 2 lamp, F40T12ES 34W, std ballast, Wrap	2		F	2/34	M	72	0.144	2920	420	R		420.48	
8	ralia High Sc	Storage by Gym #2	4 foot, 2 lamp, F40T12ES 34W, std ballast, Wrap	2		F	2/34	M	72	0.144	2920	420	R		420.48	
9	ralia High Sc	Boys Locker Room	4 foot, 1 lamp, F40T12ES 34W, std ballast, Wrap	2		F	1/34	M	46	0.092	2916	268	R		268.272	
10	ralia High Sc	Boys Locker Room	4 foot, 2 lamp, F40T12ES 34W, std ballast, Wrap	14		F	2/34	M	72	1.008	2916	2,939	R		2939.328	
11	ralia High Sc	Boys Locker Room	2 lamp, 4', F32T8 Electronic ballast	3		F	2/32	E	60	0.18	2916	525	A			524.88
12	ralia High Sc	Boys Locker Small Storage	Incandescent 60 watt	8		I	1/60	N/A	60	0.48	2920	1,402	N	1401.6		
13	ralia High Sc	Boys Locker Storage	Incandescent 200 watt	3		I	1/200	N/A	200	0.6	2920	1,752	N	1752		
14	ralia High Sc	Boys Locker Shower	Incandescent 60 watt	4		I	1/60	N/A	60	0.24	2916	700	R		699.84	
15	ralia High Sc	Coach Locker Room	Incandescent 60 watt	4		I	1/60	N/A	60	0.24	2916	700	N	699.84		
16	ralia High Sc	Coaches Locker Restroom	Incandescent 60 watt	2		I	1/60	N/A	60	0.12	2916	350	N	349.92		
17	ralia High Sc	Coaches Office	4 foot, 2 lamp, F40T12ES 34W, std ballast, Wrap	2		F	2/34	M	72	0.144	2766	398	R		398.304	
18	ralia High S	Storage by Girl's Locker Room	Incandescent 60 watt	2		I	1/60	N/A	60	0.12	2920	350	N	350.4		
19	ralia High Sc	Girls Locker Room	4 foot, 2 lamp, F40T12ES 34W, std ballast, Wrap	14		F	2/34	M	72	1.008	2916	2,939	R		2939.328	
20	ralia High Sc	Girls Locker Room	4 foot, 1 lamp, F40T12ES 34W, std ballast, Wrap	4		F	1/34	M	46	0.184	2916	537	R		536.544	
21	ralia High Sc	Girls Locker Room Shower	Incandescent 60 watt	7		I	1/60	N/A	60	0.42	2916	1,225	R		1224.72	
22	ralia High Sc	Coaches Office	4 foot, 2 lamp, F40T12ES 34W, std ballast, Surface Mount	4		F	2/34	M	72	0.288	2766	797	R		796.608	
23	ralia High Sc	Coaches Restroom	Incandescent 60 watt	2		I	1/60	N/A	60	0.12	2916	350	N	349.92		
24	ralia High Sc	Basement	8 foot, 2 lamp, F96T12 HO ES 95 watt lamp, std ballast, Strip	8		F	2/95	M	227	1.816	1458	2,648	N	2647.728		
25	ralia High Sc	Basement Stairs	Incandescent 60 watt	2		I	1/60	N/A	60	0.12	8760	1,051	N	1051.2		
26	ralia High Sc	Boiler Room	8 foot, 2 lamp, F96T12 HO ES 95 watt lamp, std ballast, Strip	1		F	2/95	M	227	0.227	1458	331	R		330.966	
27	ralia High Sc	Gym Storage #1	Incandescent 300 watt	1		I	1/300	N/A	300	0.3	2920	876	N	876		
28	ralia High Sc	Gym Storage #2	Incandescent 300 watt	1		I	1/300	N/A	300	0.3	2920	876	N	876		
29	ralia High Sc	Commons and Main Entry	Incandescent Exit Sign Fixture 2-15 Watt	16		I	2/15	N/A	30	0.48	8760	4,205	N	4204.8		
30	ralia High Sc	Lower Locker Room	4 foot, 1 lamp, F40T12ES 34W, std ballast, Wrap	21		F	1/34	M	46	0.966	2916	2,817	N	2816.856		
31	ralia High Sc	Lower Locker Room	2 lamp, 4', F32T8 Electronic ballast	8		F	2/32	E	60	0.48	2916	1,400	A			1399.68
32	ralia High Sc	Lower Locker Room	3 lamp, 4', F32T8 Electronic ballast	8		F	3/32	E	90	0.72	2916	2,100	N	2099.52		
33	ralia High Sc	Classroom Room 301	2 lamp, 4', F32T8 Electronic ballast	56		F	2/32	E	60	3.36	2402	8,071	A			8070.72
34	ralia High Sc	Classroom Room 301	Incandescent Exit Sign Fixture 2-15 Watt	6		I	2/15	N/A	30	0.18	8760	1,577	N	1576.8		

	Location		Proposed Lighting*															
				Quantity										Enter	kWh/Yr Adjusted			
Ln #	Loc. #	Location Name (floor, room #, etc.)	Proposed Fixture Description/Model	Ind. Wired	Tandem Wired	Lamp Type	Lamp Watts	Ballast Type	Watts/ Unit	Total kW	Hours/ Yr	kWh/ Yr	N,R or A***	New Fixture	Retro. with kit/comp.	Remain As Is	Quantity
1	alia High S	Electrical Room by Gym	4', 2 lamp F32T8/E RW (Reduced Wattage) ballast, Strip Fixture TX FLOUR C232LOWMV	1		F	2/32	E	48	0	1,458	70	N	70			
2	alia High S	Hall to Locker Rooms	4', 1 lamp, F28T8/E RW (Reduced Wattage) ballast HALCO EP132IS/L/MV/HE	8		F	1/28	E	22	0	8,760	1,542	R		1,542		
3	alia High S	Hall to Locker Rooms	4', 2 lamp, F28T8/E RW (Reduced Wattage) ballast HALCO EP232IS/L/MV/HE	1		F	2/28	E	42	0	8,760	368	R		368		
4	alia High S	Hall to Locker Rooms	New LED Exit Sign, by TCP or equivalent TCP 22745	1		LED	1/		3	0	8,760	26	N	26			
5	alia High S	Hall to Locker Rooms	2 lamp, 4', F32T8 Electronic ballast	8		F	2/32	E	60	0	8,760	4,205	A			4,205	
6	alia High S	Soccer Storage Room	4', 2 lamp, F28T8/E RW (Reduced Wattage) ballast HALCO EP232IS/L/MV/HE	2		F	2/28	E	42	0	2,920	245	R		245		
7	alia High S	Storage by Gym #1	4', 2 lamp, F28T8/E RW (Reduced Wattage) ballast HALCO EP232IS/L/MV/HE	2		F	2/28	E	42	0	2,920	245	R		245		
8	alia High S	Storage by Gym #2	4', 2 lamp, F28T8/E RW (Reduced Wattage) ballast HALCO EP232IS/L/MV/HE	2		F	2/28	E	42	0	2,920	245	R		245		
9	alia High S	Boys Locker Room	4', 1 lamp, F28T8/E RW (Reduced Wattage) ballast HALCO EP132IS/L/MV/HE	2		F	1/28	E	22	0	2,916	128	R		128		
10	alia High S	Boys Locker Room	4', 2 lamp, F28T8/E RW (Reduced Wattage) ballast HALCO EP232IS/L/MV/HE	14		F	2/28	E	42	1	2,916	1,715	R		1,715		
11	alia High S	Boys Locker Room	2 lamp, 4', F32T8 Electronic ballast	3		F	2/32	E	60	0	2,916	525	A			525	6
12	alia High S	Boys Locker Small Storage	New CFL Fixture, 2-26 watts - Magnetic - HPF, 14" Drum Incon 11411-52QE-41K	2		CF	2/26	M	52	0	2,920	304	N	304			
13	alia High S	Boys Locker Storage	4', 2 lamp F32T8/E RW (Reduced Wattage) ballast, Strip Fixture TX FLOUR C232LOWMV	3		F	2/32	E	48	0	2,920	420	N	420			
14	alia High S	Boys Locker Shower	23watt CFL, Screwin TCP 28923	4		CF	1/23		23	0	2,916	268	R		268		
15	alia High S	Coach Locker Room	New CFL Fixture, 1-18 watts - Electronic, Drum Incon 11111-18QE-41K	2		CF	1/18	E	18	0	2,916	105	N	105			
16	alia High S	Coaches Locker Restroom	New T8 Vanity Fixture, 2', 1 lamp, F17T8/E. TX FLOUR 555A117MV	1		F	2/17	E	30	0	2,916	87	N	87			
17	alia High S	Coaches Office	4', 2 lamp, F28T8/E RW (Reduced Wattage) ballast HALCO EP232IS/L/MV/HE	2		F	2/28	E	42	0	2,766	232	R		232		1
18	alia High S	Storage by Girl's Locker Room	New CFL Fixture, 1-18 watts - Electronic, Drum Incon 11111-18QE-41K	1		CF	1/18	E	18	0	2,920	53	N	53			
19	alia High S	Girls Locker Room	4', 2 lamp, F28T8/E RW (Reduced Wattage) ballast HALCO EP232IS/L/MV/HE	14		F	2/28	E	42	1	2,916	1,715	R		1,715		
20	alia High S	Girls Locker Room	4', 1 lamp, F28T8/E RW (Reduced Wattage) ballast HALCO EP132IS/L/MV/HE	4		F	1/28	E	22	0	2,916	257	R		257		
21	alia High S	Girls Locker Room Shower	23watt CFL, Screwin TCP 28923	7		CF	1/23		23	0	2,916	469	R		469		
22	alia High S	Coaches Office	8', 4 lamp, F28T8/E RLO Tandem HALCO EP432IS/L/MV/HE		2	F	4/28	E	84	0	2,766	465	R		465		
23	alia High S	Coaches Restroom	New T8 Vanity Fixture, 2', 1 lamp, F17T8/E. TX FLOUR 555A117MV	1		F	2/17	E	30	0	2,916	87	N	87			
24	alia High S	Basement	8', 2 lamp F32T8/E RW (Reduced Wattage) ballast, Strip Fixture TX FLOUR S1328LOWMV	8		F	2/32	E	60	0	1,458	700	N	700			
25	alia High S	Basement Stairs	New CFL Fixture, 18 watts - Electronic, Wall Mount Incon 31811-18QE-41K	2		CF	1/18	E	18	0	8,760	315	N	315			
26	alia High S	Boiler Room	8', 4 lamp, F28T8/E Retrofit, RW (Reduced Wattage), Strip Kit HALCO EP432IS/L/MV/HE + US ENERGY SKSP6-43296-WPS-XCLIP	1		F	4/28	E	84	0	1,458	122	R		122		
27	alia High S	Gym Storage #1	4', 2 lamp F32T8/E RW (Reduced Wattage) ballast, Strip Fixture TX FLOUR C232LOWMV	1		F	2/32	E	48	0	2,920	140	N	140			
28	alia High S	Gym Storage #2	4', 2 lamp F32T8/E RW (Reduced Wattage) ballast, Strip Fixture TX FLOUR C232LOWMV	1		F	2/32	E	48	0	2,920	140	N	140			
29	alia High S	Commons and Main Entry	New LED Exit Sign, by TCP or equivalent TCP 22745	16		LED	1/		3	0	8,760	420	N	420			12
30	alia High S	Lower Locker Room	New T8 Vapor Tight Fixture, 4', 1 lamp F32T8 NLO (extra labor to remove additional fixtures) Texas Flour TOA132 LOWMV	9		F	1/32	E	30	0	2,916	787	N	787			
31	alia High S	Lower Locker Room	2 lamp, 4', F32T8 Electronic ballast	8		F	2/32	E	60	0	2,916	1,400	A			1,400	
32	alia High S	Lower Locker Room	New T8 Vapor Tight Fixture, 4', 2 lamp F32T8 RLO Texas Flour TOA232 LOWMV	8		F	2/32	E	60	0	2,916	1,400	N	1,400			
33	alia High S	Classroom Room 301	2 lamp, 4', F32T8 Electronic ballast	56		F	2/32	E	60	3	2,402	8,071	A			8,071	
34	alia High S	Classroom Room 301	New LED Exit Sign, by TCP or equivalent TCP 22745	6		LED	1/		3	0	8,760	158	N	158			

Centralia High School
Facility name

Rachael Rieken
Form completed by

	Location		Existing Lighting*													
				Quantity										kWh/Yr Adjusted		
Ln. #	Loc. #	Location Name (floor, room #, etc.)	Existing Fixture Description/Model	Ind. Wired	Tandem Wired	Lamp Type	Lamp Watts	Ballast Type	Watts/ Unit**	Total kW	Hours/ Yr	kWh/Yr	N,R or A***	Remove Fixture	Retrofit with Kit/Comp.	Remain As Is
35	ralia High Sc	lassroom Room 301 Projecto	Incandescent 90 watt	2		I	1/90	N/A	90	0.18	2402	432	R		432.36	
36	ralia High Sc	Stage	Incandescent 300 watt	8		I	1/300	N/A	300	2.4	2916	6,998	N	6998.4		
37	ralia High Sc	Classroom 301	Incandescent 150 watt	36		I	1/150	N/A	150	5.4	2402	12,971	A			12970.8
38	ralia High Sc	Commons	4 foot, 2 lamp, F40T12ES 34W, std ballast, Wrap	6		F	2/34	M	72	0.432	2916	1,260	R		1259.712	
39	ralia High Sc	300 Wing Hall	2 lamp, 4', F40T12 Magnetic , Vaportite	7		F	2/34	E	72	0.504	8760	4,415	R		4415.04	
40	ralia High Sc	300 Wing Hall	4 foot, 1 lamp, F40T12ES 34W, std ballast, Wrap	15		F	1/34	M	46	0.69	8760	6,044	R		6044.4	
41	ralia High Sc	300 Wing Hall	1 lamp, 4', F32T8 Electronic ballast	5		F	1/32	E	30	0.15	8760	1,314	A			1314
42	ralia High Sc	300 Wing Hall	Incandescent Exit Sign Fixture 2-15 Watt	6		I	2/15	N/A	30	0.18	8760	1,577	N	1576.8		
43	ralia High Sc	Custodian	Incandescent 300 watt	3		I	1/300	N/A	300	0.9	1458	1,312	N	1312.2		
44	ralia High Sc	Classroom 302 Storage	Incandescent 60 watt	2		I	1/60	N/A	60	0.12	2920	350	R		350.4	
45	ralia High Sc	lassroom 303 Practice Room	4 foot, 2 lamp, F40T12ES 34W, std ballast, Surface Mount	2		F	2/34	M	72	0.144	2402	346	R		345.888	
46	ralia High Sc	Classroom 304 Storage	Incandescent 60 watt	4		I	1/60	N/A	60	0.24	2920	701	N	700.8		
47	ralia High Sc	Classroom 304 Kilm Hall	4 foot, 2 lamp, F40T12ES 34W, std ballast, Wrap	2		F	2/34	M	72	0.144	2402	346	R		345.888	
48	ralia High Sc	Kilm	8 foot, 2 lamp, F96T12 HO ES 95 watt lamp, std ballast, Strip	2		F	2/95	M	227	0.454	2402	1,091	R		1090.508	
49	ralia High Sc	300 Wing Hall Electrical	Incandescent 300 watt	1		I	1/300	N/A	300	0.3	1458	437	N	437.4		
50	ralia High Sc	300 Wing Hall Drama Dress	Incandescent 60 watt	1		I	1/60	N/A	60	0.06	2916	175	R		174.96	
51	ralia High Sc	lassroom 305 Storage Room	Incandescent 300 watt	2		I	1/300	N/A	300	0.6	2920	1,752	N	1752		
52	ralia High Sc	Kitchen Lunch Room	4 foot, 2 lamp, F40T12ES 34W, std ballast, Wrap	2		F	2/34	M	72	0.144	1822	262	R		262.368	
53	ralia High Sc	itchen Lunch Room Restroon	Incandescent 60 watt	1		I	1/60	N/A	60	0.06	2916	175	N	174.96		
54	ralia High Sc	Kitchen Lunch Room Storage	2 lamp, 4', F40T12 Magnetic , Vaportite	10		F	2/34	E	72	0.72	2920	2,102	R		2102.4	
55	ralia High Sc	Library	Incandescent Exit Sign Fixture 2-15 Watt	2		I	2/15	N/A	30	0.06	8760	526	R		525.6	
56	ralia High Sc	Library Work Room	4 foot, 2 lamp, F40T12ES 34W, std ballast, Surface Mount	2		F	2/34	M	72	0.144	2916	420	R		419.904	
57	ralia High Sc	Library Work Room	2 lamp, 4', F32T8 Electronic ballast	17		F	2/32	E	60	1.02	2916	2,974	A			2974.32
58	ralia High Sc	Library Conference Room	4 foot, 2 lamp, F40T12ES 34W, std ballast, Surface Mount	4		F	2/34	M	72	0.288	2916	840	R		839.808	
59	ralia High Sc	Classroom 128	4 foot, 2 lamp, F40T12ES 34W, std ballast, Surface Mount	12		F	2/34	M	72	0.864	2402	2,075	R		2075.328	
60	ralia High Sc	Boys Restroom	4 foot, 1 lamp, F40T12ES 34W, std ballast, Wrap	3		F	1/34	M	46	0.138	2916	402	R		402.408	
61	ralia High Sc	Boys Restroom	Incandescent 60 watt	1		I	1/60	N/A	60	0.06	2916	175	N	174.96		
62	ralia High Sc	Girl's Restroom	4 foot, 1 lamp, F40T12ES 34W, std ballast, Wrap	3		F	1/34	M	46	0.138	8760	1,209	R		1208.88	
63	ralia High Sc	Girl's Restroom	Incandescent 60 watt	1		I	1/60	N/A	60	0.06	2916	175	N	174.96		
64	ralia High Sc	Office 124	Incandescent 60 watt	4		I	1/60	N/A	60	0.24	2916	700	N	699.84		
65	ralia High Sc	Advance Dark Room	2x4, 4 lamp, F40T12, std ballast, Surface Mount Fixture	1		F	4/34	M	147	0.147	2766	407	R		406.602	
66	ralia High Sc	Photo Develop Room	4 foot, 2 lamp, F40T12ES 34W, std ballast, Surface Mount	8		F	2/34	M	72	0.576	2402	1,384	R		1383.552	
67	ralia High Sc	Classroom 120	4 foot, 4 lamp, F40T12, std ballast, Wrap	12		F	4/34	M	147	1.764	2402	4,237	R		4237.128	
68	ralia High Sc	Classroom 120	Incandescent Exit Sign Fixture 2-15 Watt	2		I	2/15	N/A	30	0.06	8760	526	N	525.6		

	Location		Proposed Lighting*														
				Quantity									Enter	kWh/Yr Adjusted			
Ln #	Loc. #	Location Name (floor, room #, etc.)	Proposed Fixture Description/Model	Ind. Wired	Tandem Wired	Lamp Type	Lamp Watts	Ballast Type	Watts/ Unit	Total kW	Hours/ Yr	kWh/ Yr	N,R or A***	New Fixture	Retro. with kit/comp.	Remain As Is	Quantity
35	alia High S	lassroom Room 301 Projecto	R40, 23watt CFL, Screwin TCP 1R40 23	2		CF	1/23		23	0	2,402	110	R		110		
36	alia High S	Stage	New Wrap Fixture, 8', 4 lamp F28T8/E, NLO ballast TX FLOUR 207A8232MV	8		F	4/32	E	120	1	2,916	2,799	N	2,799			
37	alia High S	Classroom 301	Incandescent 150 watt	36		I	1/150	N/A	150	5	2,402	12,971	A			12,971	3
38	alia High S	Commons	8', 4 lamp, F28T8/E RLO Tandem HALCO EP432IS/L/MV/HE		3	F	4/28	E	84	0	2,916	735	R		735		
39	alia High S	300 Wing Hall	4', 2 lamp, F28T8/E RW (Reduced Wattage) ballast HALCO EP232IS/L/MV/HE	7		F	2/28	E	42	0	8,760	2,575	R		2,575		
40	alia High S	300 Wing Hall	4', 1 lamp, F28T8/E RW (Reduced Wattage) ballast HALCO EP132IS/L/MV/HE	15		F	1/28	E	22	0	8,760	2,891	R		2,891		
41	alia High S	300 Wing Hall	1 lamp, 4', F32T8 Electronic ballast	5		F	1/32	E	30	0	8,760	1,314	A			1,314	
42	alia High S	300 Wing Hall	New LED Exit Sign, by TCP or equivalent TCP 22745	6		LED	1/		3	0	8,760	158	N	158			
43	alia High S	Custodian	4', 2 lamp F32T8/E RW (Reduced Wattage) ballast, Strip Fixture TX FLOUR C232LOWMV	3		F	2/32	E	48	0	1,458	210	N	210			
44	alia High S	Classroom 302 Storage	18watt CFL, Screwin TCP 28918	2		CF	1/18		18	0	2,920	105	R		105		1
45	alia High S	lassroom 303 Practice Room	8', 4 lamp, F28T8/E RLO Tandem HALCO EP432IS/L/MV/HE		1	F	4/28	E	84	0	2,402	202	R		202		3
46	alia High S	Classroom 304 Storage	4', 2 lamp F32T8/E RW (Reduced Wattage) ballast, Strip Fixture TX FLOUR C232LOWMV	1		F	2/32	E	48	0	2,920	140	N	140			
47	alia High S	Classroom 304 Kilm Hall	4', 2 lamp, F28T8/E RW (Reduced Wattage) ballast HALCO EP232IS/L/MV/HE	2		F	2/28	E	42	0	2,402	202	R		202		
48	alia High S	Kilm	8', 4 lamp, F28T8/E Retrofit, RW (Reduced Wattage), Strip Kit HALCO EP432IS/L/MV/HE + US ENERGY SKSP6-43296-WPS-XCLIP	2		F	4/28	E	84	0	2,402	404	R		404		
49	alia High S	300 Wing Hall Electrical	4', 2 lamp F32T8/E RW (Reduced Wattage) ballast, Strip Fixture TX FLOUR C232LOWMV	1		F	2/32	E	48	0	1,458	70	N	70			
50	alia High S	300 Wing Hall Drama Dress	23watt CFL, Screwin TCP 28923	1		CF	1/23		23	0	2,916	67	R		67		
51	alia High S	lassroom 305 Storage Room	4', 2 lamp F32T8/E RW (Reduced Wattage) ballast, Strip Fixture TX FLOUR C232LOWMV	2		F	2/32	E	48	0	2,920	280	N	280			
52	alia High S	Kitchen Lunch Room	4', 2 lamp, F28T8/E RW (Reduced Wattage) ballast HALCO EP232IS/L/MV/HE	2		F	2/28	E	42	0	1,822	153	R		153		
53	alia High S	itchen Lunch Room Restroon	New CFL Fixture, 1-18 watts - Electronic, Drum Incon 11111-18QE-41K	1		CF	1/18	E	18	0	2,916	52	N	52			
54	alia High S	Kitchen Lunch Room Storage	4', 2 lamp, F28T8/E RW (Reduced Wattage) ballast HALCO EP232IS/L/MV/HE	10		F	2/28	E	42	0	2,920	1,226	R		1,226		
55	alia High S	Library	New LED Exit Sign, by TCP or equivalent TCP 22745	2		LED	1/		3	0	8,760	53	R		53		1
56	alia High S	Library Work Room	8', 4 lamp, F28T8/E RLO Tandem HALCO EP432IS/L/MV/HE		1	F	4/28	E	84	0	2,916	245	R		245		
57	alia High S	Library Work Room	2 lamp, 4', F32T8 Electronic ballast	17		F	2/32	E	60	1	2,916	2,974	A			2,974	2
58	alia High S	Library Conference Room	8', 4 lamp, F28T8/E RLO Tandem HALCO EP432IS/L/MV/HE		2	F	4/28	E	84	0	2,916	490	R		490		6
59	alia High S	Classroom 128	8', 4 lamp, F28T8/E RLO Tandem HALCO EP432IS/L/MV/HE		6	F	4/28	E	84	1	2,402	1,211	R		1,211		2
60	alia High S	Boys Restroom	4', 3-lamp, F28T8/E, RW (Reduced Wattage) ballast Tandem Wired 3 fixtures HALCO EP332IS/L/MV/HE		1	F	3/28	E	63	0	2,916	184	R		184		
61	alia High S	Boys Restroom	New CFL Fixture, 1-18 watts - Electronic, Ceiling Square 12x12Incon 76793B-18QE-41K	1		CF	1/18	E	18	0	2,916	52	N	52			2
62	alia High S	Girl's Restroom	4', 3-lamp, F28T8/E, RW (Reduced Wattage) ballast Tandem Wired 3 fixtures HALCO EP332IS/L/MV/HE		1	F	3/28	E	63	0	8,760	552	R		552		
63	alia High S	Girl's Restroom	New CFL Fixture, 1-18 watts - Electronic, Ceiling Square 12x12Incon 76793B-18QE-41K	1		CF	1/18	E	18	0	2,916	52	N	52			3
64	alia High S	Office 124	New CFL Fixture, 1-18 watts - Electronic, Drum Incon 11111-18QE-41K	1		CF	1/18	E	18	0	2,916	52	N	52			
65	alia High S	Advance Dark Room	4', 2 lamp, F28T8/E RW (Reduced Wattage) ballast HALCO EP232IS/L/MV/HE	1		F	2/28	E	42	0	2,766	116	R		116		4
66	alia High S	Photo Develop Room	8', 4 lamp, F28T8/E RLO Tandem HALCO EP432IS/L/MV/HE		4	F	4/28	E	84	0	2,402	807	R		807		
67	alia High S	Classroom 120	4', 2 lamp, F28T8/E HLO (High Light Output) ballast HALCO EP232IS/H/MV/HE	12		F	2/28	E	65	1	2,402	1,874	R		1,874		
68	alia High S	Classroom 120	New LED Exit Sign, by TCP or equivalent TCP 22745	2		LED	1/		3	0	8,760	53	N	53			

Centralia High School
Facility name

Rachael Rieken
Form completed by

	Location		Existing Lighting*														
				Quantity										kWh/Yr Adjusted		
Ln. #	Loc. #	Location Name (floor, room #, etc.)	Existing Fixture Description/Model	Ind. Wired	Tandem Wired	Lamp Type	Lamp Watts	Ballast Type	Watts/ Unit**	Total kW	Hours/ Yr	kWh/Yr	N,R or A***	Remove Fixture	Retrofit with Kit/Comp.	Remain As Is
69	ralia High Sc	Classroom 120	42 watt CFL screw in	15		CF	1/42		42	0.63	2402	1,513	A			1513.26
70	ralia High Sc	Main Office Work Room	4 foot, 2 lamp, F40T12ES 34W, std ballast, Surface Mount	10		F	2/34	M	72	0.72	2916	2,100	R		2099.52	
71	ralia High Sc	Main Office Work Room	2 lamp, 4', F32T8 Electronic ballast	3		F	2/32	E	60	0.18	2916	525	A			524.88
72	ralia High Sc	Main Office Work Room	4 foot, 2 lamp, F40T12ES 34W, std ballast, w/ Battery Ballast	1		F	2/34	M	72	0.072	8760	631	R		630.72	
73	ralia High Sc	Main Office Phone Room	Incandescent 100 watt	1		I	1/100	N/A	100	0.1	2920	292	N	292		
74	ralia High Sc	Teachers Lounge	4 foot, 2 lamp, F40T12ES 34W, std ballast, Surface Mount	4		F	2/34	M	72	0.288	2916	840	R		839.808	
75	ralia High Sc	Teachers Lounge	4 foot, 2 lamp, F40T12ES 34W, std ballast, Surface Mount	1		F	2/34	M	72	0.072	2916	210	R		209.952	
76	ralia High Sc	Teachers Work Room	4 foot, 2 lamp, F40T12ES 34W, std ballast, w/ Battery Ballast	1		F	2/34	M	72	0.072	8760	631	R		630.72	
77	ralia High Sc	Main Office Hall	4 foot, 1 lamp, F40T12ES 34W, std ballast, Wrap	10		F	1/34	M	46	0.46	8760	4,030	R		4029.6	
78	ralia High Sc	Main Office Restroom	Incandescent 60 watt	4		I	1/60	N/A	60	0.24	2916	700	N	699.84		
79	ralia High Sc	Main Office Nurse	4 foot, 2 lamp, F40T12ES 34W, std ballast, Surface Mount	2		F	2/34	M	72	0.144	2916	420	R		419.904	
80	ralia High Sc	Main Office Nurse	Incandescent 60 watt	2		I	1/60	N/A	60	0.12	2916	350	N	349.92		
81	ralia High Sc	Main Office Conference Room	4 foot, 2 lamp, F40T12ES 34W, std ballast, Surface Mount	4		F	2/34	M	72	0.288	2916	840	R		839.808	
82	ralia High Sc	Main Office Counselor Office	4 foot, 2 lamp, F40T12ES 34W, std ballast, Surface Mount	6		F	2/34	M	72	0.432	2766	1,195	R		1194.912	
83	ralia High Sc	Main Office Registrar	4 foot, 2 lamp, F40T12ES 34W, std ballast, Surface Mount	2		F	2/34	M	72	0.144	2766	398	R		398.304	
84	ralia High Sc	Main Office Sprinkler Room	Incandescent 60 watt	1		I	1/60	N/A	60	0.06	1458	87	N	87.48		
85	ralia High Sc	Counseling Office	4 foot, 1 lamp, F40T12ES 34W, std ballast, Wrap	6		F	1/34	M	46	0.276	2766	763	R		763.416	
86	ralia High Sc	Counseling Office	4 foot, 2 lamp, F40T12ES 34W, std ballast, Surface Mount	2		F	2/34	M	72	0.144	2766	398	R		398.304	
87	ralia High Sc	Counseling Office	4 foot, 3 lamp, F40T12ES 34W, std ballast, Troffer	1		F	3/34	M	127	0.127	2766	351	N	351.282		
88	ralia High Sc	Classroom 211	8 foot, 2 lamp, F96T12 HO, std ballast, Vapor Tight	24		F	2/110	M	252	6.048	2402	14,527	N	14527.296		
89	ralia High Sc	Classroom 211 Storage	Incandescent 300 watt	2		I	1/300	N/A	300	0.6	2920	1,752	N	1752		
90	ralia High Sc	Classroom 211	Incandescent 300 watt	5		I	1/300	N/A	300	1.5	2402	3,603	R		3603	
91	ralia High Sc	Classroom 211	Incandescent 100 watt	3		I	1/100	N/A	100	0.3	2402	721	N	720.6		
92	ralia High Sc	Classroom 211 Storage	4 foot, 2 lamp, F40T12ES 34W, std ballast, Surface Mount	2		F	2/34	M	72	0.144	2920	420	R		420.48	
93	ralia High Sc	Classroom Loft	8 foot, 2 lamp, F96T12 HO, std ballast, Vapor Tight	1		F	2/110	M	252	0.252	2916	735	R		734.832	
94	ralia High Sc	Girls Restroom	3 lamp, 4', F32T8 Electronic ballast	3		F	3/32	E	90	0.27	2916	787	A			787.32
95	ralia High Sc	Girl's Restroom	Incandescent 100 watt	1		I	1/100	N/A	100	0.1	2916	292	N	291.6		
96	ralia High Sc	Boy's Restroom	4 foot, 1 lamp, F40T12ES 34W, std ballast, Wrap	3		F	1/34	M	46	0.138	2916	402	R		402.408	
97	ralia High Sc	Boy's Restroom	Incandescent 100 watt	1		I	1/100	N/A	100	0.1	2916	292	N	291.6		
98	ralia High Sc	Classroom 209 Entry	8 foot, 2 lamp, F96T12 HO ES 95 watt lamp, std ballast, Strip	1		F	2/95	M	227	0.227	2402	545	N	545.254		
99	ralia High Sc	Classroom 209 Entry	Incandescent 100 watt	1		I	1/100	N/A	100	0.1	2402	240	R		240.2	
100	ralia High Sc	Classroom 209	8 foot, 2 lamp, F96T12 HO, std ballast, Vapor Tight	14		F	2/110	M	252	3.528	2402	8,474	N	8474.256		
101	ralia High Sc	Classroom 209	8 foot, 2 lamp, F96T12 HO ES 95 watt lamp, std ballast, Strip	2		F	2/95	M	227	0.454	2402	1,091	N	1090.508		
102	ralia High Sc	Classroom 209	4 foot, 4 lamp, F40T12, std ballast, Wrap	6		F	4/34	M	147	0.882	2402	2,119	N	2118.564		

	Location		Proposed Lighting*															
				Quantity									Enter	kWh/Yr Adjusted			
Ln #	Loc. #	Location Name (floor, room #, etc.)	Proposed Fixture Description/Model	Ind. Wired	Tandem Wired	Lamp Type	Lamp Watts	Ballast Type	Watts/ Unit	Total kW	Hours/ Yr	kWh/ Yr	N,R or A***	New Fixture	Retro. with kit/comp.	Remain As Is	Quantity
69	alia High S	Classroom 120	42 watt CFL screw in	15		CF	1/42		42	1	2,402	1,513	A			1,513	5
70	alia High S	Main Office Work Room	8', 4 lamp, F28T8/E RLO Tandem HALCO EP432IS/L/MV/HE		5	F	4/28	E	84	0	2,916	1,225	R		1,225		
71	alia High S	Main Office Work Room	2 lamp, 4', F32T8 Electronic ballast	3		F	2/32	E	60	0	2,916	525	A			525	
72	alia High S	Main Office Work Room	4', 2 lamp, F28T8/E RW (Reduced Wattage) ballast with Battery Ballast HALCO EP232IS/L/MV/HE + BATTERY	1		F	2/28	E	42	0	8,760	368	R		368		
73	alia High S	Main Office Phone Room	New CFL Fixture, 1-18 watts - Electronic, Drum Incon 11111-18QE-41K	1		CF	1/18	E	18	0	2,920	53	N	53			2
74	alia High S	Teachers Lounge	8', 4 lamp, F28T8/E RLO Tandem HALCO EP432IS/L/MV/HE		2	F	4/28	E	84	0	2,916	490	R		490		
75	alia High S	Teachers Lounge	4', 2 lamp, F28T8/E RW (Reduced Wattage) ballast HALCO EP232IS/L/MV/HE	1		F	2/28	E	42	0	2,916	122	R		122		
76	alia High S	Teachers Work Room	4', 2 lamp, F28T8/E RW (Reduced Wattage) ballast with Battery Ballast HALCO EP232IS/L/MV/HE + BATTERY	1		F	2/28	E	42	0	8,760	368	R		368		
77	alia High S	Main Office Hall	4', 1 lamp, F28T8/E RW (Reduced Wattage) ballast HALCO EP132IS/L/MV/HE	10		F	1/28	E	22	0	8,760	1,927	R		1,927		2
78	alia High S	Main Office Restroom	New T8 Vanity Fixture, 2', 1 lamp, F17T8/E. TX FLOUR 555A117MV	2		F	2/17	E	30	0	2,916	175	N	175			1
79	alia High S	Main Office Nurse	8', 4 lamp, F28T8/E RLO Tandem HALCO EP432IS/L/MV/HE		1	F	4/28	E	84	0	2,916	245	R		245		1
80	alia High S	Main Office Nurse	New T8 Vanity Fixture, 2', 1 lamp, F17T8/E. TX FLOUR 555A117MV	1		F	2/17	E	30	0	2,916	87	N	87			2
81	alia High S	Main Office Conference Room	8', 4 lamp, F28T8/E RLO Tandem HALCO EP432IS/L/MV/HE		2	F	4/28	E	84	0	2,916	490	R		490		3
82	alia High S	Main Office Counselor Office	8', 4 lamp, F28T8/E RLO Tandem HALCO EP432IS/L/MV/HE		3	F	4/28	E	84	0	2,766	697	R		697		1
83	alia High S	Main Office Registrar	8', 4 lamp, F28T8/E RLO Tandem HALCO EP432IS/L/MV/HE		1	F	4/28	E	84	0	2,766	232	R		232		
84	alia High S	Main Office Sprinkler Room	New CFL Fixture, 1-18 watts - Electronic, Drum Incon 11111-18QE-41K	1		CF	1/18	E	18	0	1,458	26	N	26			3
85	alia High S	Counseling Office	4', 2 lamp, F28T8/E RW (Reduced Wattage) ballast Tandem Wired HALCO EP232IS/L/MV/HE		3	F	2/28	E	42	0	2,766	349	R		349		1
86	alia High S	Counseling Office	8', 4 lamp, F28T8/E RLO Tandem HALCO EP432IS/L/MV/HE		1	F	4/28	E	84	0	2,766	232	R		232		
87	alia High S	Counseling Office	New Wrap Fixture, 4', 2 lamp F32T8/E, NLO ballast TX FLOUR 207A232LOWMV	1		F	2/32	E	60	0	2,766	166	N	166			
88	alia High S	Classroom 211	8', 4 lamp F32T8/E, 95% Polished Alum Reflector Fixture US ENERGY FSH-43296-EA-N	24		F	4/32	E	120	3	2,402	6,918	N	6,918			
89	alia High S	Classroom 211 Storage	4', 2 lamp F32T8/E RW (Reduced Wattage) ballast, Strip Fixture w/ Wire Guard TX FLOUR C232LOWMV C48WG	2		F	2/32	E	48	0	2,920	280	N	280			
90	alia High S	Classroom 211	68 watt Screw In, TCP 28968	5		CF	1/68	E	68	0	2,402	817	R		817		
91	alia High S	Classroom 211	New CFL Fixture, 26 watts - Electronic, Ceiling Mount 16x16 Incon 76793B-26QE-41K	3		CF	1/26	E	26	0	2,402	187	N	187			1
92	alia High S	Classroom 211 Storage	8', 4 lamp, F28T8/E RLO Tandem HALCO EP432IS/L/MV/HE		1	F	4/28	E	84	0	2,920	245	R		245		
93	alia High S	Classroom Loft	8', 4 lamp, F28T8/E Retrofit, RW (Reduced Wattage), Strip Kit HALCO EP432IS/L/MV/HE + US ENERGY SKSP6-43296-WPS-XCLIP	1		F	4/28	E	84	0	2,916	245	R		245		
94	alia High S	Girls Restroom	3 lamp, 4', F32T8 Electronic ballast	3		F	3/32	E	90	0	2,916	787	A			787	
95	alia High S	Girl's Restroom	New CFL Fixture, 26 watts - Electronic, Ceiling Mount 16x16 Incon 76793B-26QE-41K	1		CF	1/26	E	26	0	2,916	76	N	76			2
96	alia High S	Boy's Restroom	4', 3-lamp, F28T8/E, RW (Reduced Wattage) ballast Tandem Wired 3 fixtures HALCO EP332IS/L/MV/HE		1	F	3/28	E	63	0	2,916	184	R		184		
97	alia High S	Boy's Restroom	New CFL Fixture, 26 watts - Electronic, Ceiling Mount 16x16 Incon 76793B-26QE-41K	1		CF	1/26	E	26	0	2,916	76	N	76			
98	alia High S	Classroom 209 Entry	New Wrap Fixture, 8' 2 lamp, F32T8/E, RW (Reduced Wattage) ballast TX FLOUR 201A8132LOWMV	1		F	2/32	E	60	0	2,402	144	N	144			
99	alia High S	Classroom 209 Entry	Remove Fixture	1			/				2,402		R				
100	alia High S	Classroom 209	8', 4 lamp F32T8/E, 95% Polished Alum Reflector Fixture US ENERGY FSH-43296-EA-N	14		F	4/32	E	120	2	2,402	4,035	N	4,035			
101	alia High S	Classroom 209	New Wrap Fixture, 8' 2 lamp, F32T8/E, RW (Reduced Wattage) ballast TX FLOUR 201A8132LOWMV	2		F	2/32	E	60	0	2,402	288	N	288			
102	alia High S	Classroom 209	8', 4 lamp F32T8/E, 95% Polished Alum Reflector Fixture US ENERGY FSH-43296-EA-N	6		F	4/32	E	120	1	2,402	1,729	N	1,729			1

Centralia High School
Facility name

Rachael Rieken
Form completed by

	Location		Existing Lighting*														
				Quantity											kWh/Yr Adjusted		
Ln. #	Loc. #	Location Name (floor, room #, etc.)	Existing Fixture Description/Model	Ind. Wired	Tandem Wired	Lamp Type	Lamp Watts	Ballast Type	Watts/ Unit**	Total kW	Hours/ Yr	kWh/Yr	N,R or A***	Remove Fixture	Retrofit with Kit/Comp.	Remain As Is
103	ralia High Sc	Classroom 209	4 foot, 2 lamp, F40T12ES 34W, std ballast, Surface Mount	2		F	2/34	M	72	0.144	2402	346	R		345.888	
104	ralia High Sc	Classroom 209 Weld Hood	Incandescent 200 watt	3		I	1/200	N/A	200	0.6	2402	1,441	N	1441.2		
105	ralia High Sc	Classroom 209 Storage #1	Incandescent 300 watt	1		I	1/300	N/A	300	0.3	2920	876	N	876		
106	ralia High Sc	Classroom 209 Storage #2	Incandescent 200 watt	3		I	1/200	N/A	200	0.6	2920	1,752	N	1752		
107	ralia High Sc	Classroom 209 Tool Storage	Incandescent 300 watt	2		I	1/300	N/A	300	0.6	2920	1,752	N	1752		
108	ralia High Sc	Classroom 209 storage #3	Incandescent 300 watt	1		I	1/300	N/A	300	0.3	2920	876	N	876		
109	ralia High Sc	Classroom 208 Office	Incandescent 60 watt	4		I	1/60	N/A	60	0.24	2766	664	N	663.84		
110	ralia High Sc	Classroom 208 Closet	Incandescent 60 watt	1		I	1/60	N/A	60	0.06	2920	175	R		175.2	
111	ralia High Sc	Lab Closet	4 foot, 2 lamp, F40T12ES 34W, std ballast, Surface Mount	1		F	2/34	M	72	0.072	2920	210	R		210.24	
112	ralia High Sc	Lab Closet	Incandescent 60 watt	4		I	1/60	N/A	60	0.24	2920	701	R		700.8	
113	ralia High Sc	Photgraphy Lab									2916		A			
114	ralia High Sc	Classroom 203 Storage	4 foot, 2 lamp, F40T12ES 34W, std ballast, Wrap	7		F	2/34	M	72	0.504	2920	1,472	R		1471.68	
115	ralia High Sc	Classroom 203 Storage	4 foot, 1 lamp, F40T12ES 34W, std ballast, Wrap	2		F	1/34	M	46	0.092	2920	269	R		268.64	
116	ralia High Sc	Classroom 207 Storage	4 foot, 2 lamp, F40T12ES 34W, std ballast, Wrap	7		F	2/34	M	72	0.504	2920	1,472	R		1471.68	
117	ralia High Sc	Classroom 207 Storage	4 foot, 1 lamp, F40T12ES 34W, std ballast, Wrap	2		F	1/34	M	46	0.092	2920	269	R		268.64	
118	ralia High Sc	Classroom 213 Storage	Incandescent 100 watt	2		I	1/100	N/A	100	0.2	2920	584	N	584		
119	ralia High Sc	Classroom 214 Undercounter	4 foot, 1 lamp, F40T12ES 34W, std ballast, Strip	8		F	1/34	M	46	0.368	2402	884	R		883.936	
120	ralia High Sc	Office 106	4 foot, 1 lamp, F40T12ES 34W, std ballast, Strip	2		F	1/34	M	46	0.092	2766	254	R		254.472	
121	ralia High Sc	Classroom123	4 foot, 3 lamp, F40T12ES 34W, std ballast, Troffer	28		F	3/34	M	127	3.556	2402	8,542	R		8541.512	
122	ralia High Sc	Teacher Office Room	4 foot, 1 lamp, F40T12ES 34W, std ballast, Wrap	1		F	1/34	M	46	0.046	2766	127	R		127.236	
123	ralia High Sc	Office #1	2x4, 4 lamp, F40T12, std ballast, Surface Mount Fixture	2		F	4/34	M	147	0.294	2766	813	R		813.204	
124	ralia High Sc	Office #2	2x4, 4 lamp, F40T12, std ballast, Surface Mount Fixture	2		F	4/34	M	147	0.294	2766	813	R		813.204	
125	ralia High Sc	Office #3	2x4, 4 lamp, F40T12, std ballast, Surface Mount Fixture	4		F	4/34	M	147	0.588	2766	1,626	R		1626.408	
126	ralia High Sc	Classroom 119	4 foot, 3 lamp, F40T12ES 34W, std ballast, Troffer	13		F	3/34	M	127	1.651	2402	3,966	R		3965.702	
127	ralia High Sc	Classroom 117	2x4, 4 lamp, F40T12, std ballast, Surface Mount Fixture	2		F	4/34	M	147	0.294	2402	706	R		706.188	
128	ralia High Sc	200/300 Hallways	2 lamp, 4', F32T8 Electronic ballast	5		F	2/32	E	60	0.3	8760	2,628	A			2628
129	ralia High Sc	200/300 Hallways	4 foot, 2 lamp, F40T12ES 34W, std ballast, Wrap	65		F	2/34	M	72	4.68	8760	40,997	R		40996.8	
130	ralia High Sc	200/300 Hallways	4 foot, 1 lamp, F40T12ES 34W, std ballast, Strip	27		F	1/34	M	46	1.242	8760	10,880	R		10879.92	
131	ralia High Sc	200/300 Hallways	4 foot, 2 lamp, F40T12ES 34W, std ballast, w/ Battery Ballast	2		F	2/34	M	72	0.144	8760	1,261	R		1261.44	
132	ralia High Sc	Portable P5	Incandescent Exit Sign Fixture 2-15 Watt	2		I	2/15	N/A	30	0.06	8760	526	N	525.6		
133	ralia High Sc	Portable P6	4 foot, 2 lamp, F40T12ES 34W, std ballast, Troffer Fixture	16		F	2/34	M	72	1.152	2402	2,767	R		2767.104	
134	ralia High Sc	Portable P7	4 foot, 2 lamp, F40T12ES 34W, std ballast, Troffer Fixture	16		F	2/34	M	72	1.152	2402	2,767	R		2767.104	
135	ralia High Sc	Portable P1	4 foot, 2 lamp, F40T12ES 34W, std ballast, Troffer Fixture	16		F	2/34	M	72	1.152	2402	2,767	R		2767.104	
136	ralia High Sc	Portable Exterior	High Pressure Sodium, 70 watts	1		HPS	1/70	M	95	0.095	4380	416	N	416.1		

	Location		Proposed Lighting*															
				Quantity									Enter	kWh/Yr Adjusted			
Ln #	Loc. #	Location Name (floor, room #, etc.)	Proposed Fixture Description/Model	Ind. Wired	Tandem Wired	Lamp Type	Lamp Watts	Ballast Type	Watts/ Unit	Total kW	Hours/ Yr	kWh/ Yr	N,R or A***	New Fixture	Retro. with kit/comp.	Remain As Is	Quantity
103	alia High S	Classroom 209	8', 4 lamp, F28T8/E RLO Tandem HALCO EP432IS/L/MV/HE		1	F	4/28	E	84	0	2,402	202	R		202		
104	alia High S	Classroom 209 Weld Hood	23watt CFL, Screwin TCP 28923	3		CF	1/23		23	0	2,402	166	N	166			
105	alia High S	Classroom 209 Storage #1	23watt CFL, Screwin TCP 28923	1		CF	1/23		23	0	2,920	67	N	67			
106	alia High S	Classroom 209 Storage #2	New Strip Fixture, 4', 2 lamp F32T8/E, NLO ballast TX FLOUR C232MV	3		F	2/32	E	60	0	2,920	526	N	526			
107	alia High S	Classroom 209 Tool Storage	New Strip Fixture, 4', 2 lamp F32T8/E, NLO ballast TX FLOUR C232MV	2		F	2/32	E	60	0	2,920	350	N	350			
108	alia High S	Classroom 209 storage #3	New Strip Fixture, 4', 2 lamp F32T8/E, NLO ballast TX FLOUR C232MV	1		F	2/32	E	60	0	2,920	175	N	175			3
109	alia High S	Classroom 208 Office	New Wrap Fixture, 4', 2 lamp F28T8/E, RW (Reduced Wattage) ballast TX FLOUR 207A232LOWMV	1		F	2/32	E	48	0	2,766	133	N	133			
110	alia High S	Classroom 208 Closet	23watt CFL, Screwin TCP 28923	1		CF	1/23		23	0	2,920	67	R		67		
111	alia High S	Lab Closet	4', 2 lamp, F28T8/E RW (Reduced Wattage) ballast HALCO EP232IS/L/MV/HE	1		F	2/28	E	42	0	2,920	123	R		123		3
112	alia High S	Lab Closet	Remove Fixture	1			/				2,920		R				
113	alia High S	Photgraphy Lab	No Access				/				2,916		A				
114	alia High S	Classroom 203 Storage	4', 2 lamp, F28T8/E RW (Reduced Wattage) ballast HALCO EP232IS/L/MV/HE	7		F	2/28	E	42	0	2,920	858	R		858		
115	alia High S	Classroom 203 Storage	4', 1 lamp, F28T8/E RW (Reduced Wattage) ballast HALCO EP132IS/L/MV/HE	2		F	1/28	E	22	0	2,920	128	R		128		
116	alia High S	Classroom 207 Storage	4', 2 lamp, F28T8/E RW (Reduced Wattage) ballast HALCO EP232IS/L/MV/HE	7		F	2/28	E	42	0	2,920	858	R		858		
117	alia High S	Classroom 207 Storage	4', 1 lamp, F28T8/E RW (Reduced Wattage) ballast HALCO EP132IS/L/MV/HE	2		F	1/28	E	22	0	2,920	128	R		128		1
118	alia High S	Classroom 213 Storage	New CFL Fixture, 1-18 watts - Electronic, Drum Incon 11111-18QE-41K	1		CF	1/18	E	18	0	2,920	53	N	53			
119	alia High S	Classroom 214 Undercounter	4', 1 lamp, F28T8/E RW (Reduced Wattage) ballast HALCO EP132IS/L/MV/HE	8		F	1/28	E	22	0	2,402	423	R		423		
120	alia High S	Office 106	4', 1 lamp, F28T8/E RW (Reduced Wattage) ballast HALCO EP132IS/L/MV/HE	2		F	1/28	E	22	0	2,766	122	R		122		
121	alia High S	Classroom123	2x4' WHITE Troffer Kit , 2 lamp, F28T8/E NLO HALCO EP232IS/N/MV/HE+ US ENERGY KTC-02B04-WA	28		F	2/32	E	48	1	2,402	3,228	R		3,228		
122	alia High S	Teacher Office Room	4', 1 lamp, F28T8/E RW (Reduced Wattage) ballast HALCO EP132IS/L/MV/HE	1		F	1/28	E	22	0	2,766	61	R		61		
123	alia High S	Office #1	2x4' WHITE Troffer Kit , 2 lamp, F28T8/E NLO HALCO EP232IS/N/MV/HE+ US ENERGY KTC-02B04-WA	2		F	2/32	E	48	0	2,766	266	R		266		
124	alia High S	Office #2	2x4' WHITE Troffer Kit , 2 lamp, F28T8/E NLO HALCO EP232IS/N/MV/HE+ US ENERGY KTC-02B04-WA	2		F	2/32	E	48	0	2,766	266	R		266		
125	alia High S	Office #3	2x4' WHITE Troffer Kit , 2 lamp, F28T8/E NLO HALCO EP232IS/N/MV/HE+ US ENERGY KTC-02B04-WA	4		F	2/32	E	48	0	2,766	531	R		531		
126	alia High S	Classroom 119	2x4' WHITE Troffer Kit , 2 lamp, F28T8/E NLO HALCO EP232IS/N/MV/HE+ US ENERGY KTC-02B04-WA	13		F	2/32	E	48	1	2,402	1,499	R		1,499		
127	alia High S	Classroom 117	2x4' WHITE Troffer Kit , 2 lamp, F28T8/E NLO HALCO EP232IS/N/MV/HE+ US ENERGY KTC-02B04-WA	2		F	2/32	E	48	0	2,402	231	R		231		
128	alia High S	200/300 Hallways	2 lamp, 4', F32T8 Electronic ballast	5		F	2/32	E	60	0	8,760	2,628	A			2,628	
129	alia High S	200/300 Hallways	4', 2 lamp, F28T8/E RW (Reduced Wattage) ballast HALCO EP232IS/L/MV/HE	65		F	2/28	E	42	3	8,760	23,915	R		23,915		
130	alia High S	200/300 Hallways	4', 1 lamp, F28T8/E RW (Reduced Wattage) ballast HALCO EP132IS/L/MV/HE	27		F	1/28	E	22	1	8,760	5,203	R		5,203		
131	alia High S	200/300 Hallways	4', 2 lamp, F28T8/E RW (Reduced Wattage) ballast with Battery Ballast HALCO EP232IS/L/MV/HE + BATTERY	2		F	2/28	E	42	0	8,760	736	R		736		
132	alia High S	Portable P5	New LED Exit Sign, by TCP or equivalent TCP 22745	2		LED	1/		3	0	8,760	53	N	53			
133	alia High S	Portable P6	4', 2 lamp, F28T8/E RW (Reduced Wattage) ballast HALCO EP232IS/L/MV/HE	16		F	2/28	E	42	1	2,402	1,614	R		1,614		
134	alia High S	Portable P7	4', 2 lamp, F28T8/E RW (Reduced Wattage) ballast HALCO EP232IS/L/MV/HE	16		F	2/28	E	42	1	2,402	1,614	R		1,614		
135	alia High S	Portable P1	4', 2 lamp, F28T8/E RW (Reduced Wattage) ballast HALCO EP232IS/L/MV/HE	16		F	2/28	E	42	1	2,402	1,614	R		1,614		
136	alia High S	Portable Exterior	New CFL Fixture, 1-42 watts - Electronic, Wall Mount TX Flour DC050-42PL-MVLP-41K	1		CF	1/42	E	42	0	4,380	184	N	184			

Centralia High School
Facility name

Rachael Rieken
Form completed by

	Location			Existing Lighting*													
				Quantity										kWh/Yr Adjusted		
Ln. #	Loc. #	Location Name (floor, room #, etc.)	Existing Fixture Description/Model	Ind. Wired	Tandem Wired	Lamp Type	Lamp Watts	Ballast Type	Watts/ Unit**	Total kW	Hours/ Yr	kWh/Yr	N,R or A***	Remove Fixture	Retrofit with Kit/Comp.	Remain As Is
137	ralia High Sc	Portable Exterior	Mercury Vapor, 100 watts	1		MV	1/100	M	119	0.119	4380	521	N	521.22		
138	ralia High Sc	Exterior	Metal halide , 250 watts	2		MH	1/250	M	295	0.59	4380	2,584	N	2584.2		
139	ralia High Sc	Exterior	Mercury Vapor, 175 watts	1		MV	1/175	M	197	0.197	4380	863	N	862.86		
140	ralia High Sc	Exterior	High Pressure Sodium, 250 watts	3		HPS	1/250	M	302	0.906	4380	3,968	N	3968.28		
141	ralia High Sc	Exterior	High Pressure Sodium, 150 watts	2		HPS	1/150	M	173	0.346	4380	1,515	N	1515.48		
142	ralia High Sc	Exterior	High Pressure Sodium, 400 watts	1		HPS	1/400	M	469	0.469	4380	2,054	R		2054.22	
143	ralia High Sc	Exterior Post Top	High Pressure Sodium, 150 watts	1		HPS	1/150	M	173	0.173	4380	758	N	757.74		
144	ralia High Sc	Exterior	High Pressure Sodium, 400 watts	1		HPS	1/400	M	469	0.469	4380	2,054	N	2054.22		
145	ralia High Sc	Exterior	2 lamp, 4', F32T8 Electronic ballast	4		F	2/32	E	60	0.24	4380	1,051	A			1051.2
146	ralia High Sc	Loading Docks	High Pressure Sodium, 250 watts	1		HPS	1/250	M	302	0.302	4380	1,323	N	1322.76		
147	ralia High Sc	Wresling Build Exterior	High Pressure Sodium, 70 watts	2		HPS	1/70	M	95	0.19	4380	832	N	832.2		
148	ralia High Sc	Main Parking Lot	Metal halide , 400 watts	28		MH	1/400	M	461	12.908	4380	56,537	N	56537.04		
149	ralia High Sc	Trophy Cases	4 foot, 1 lamp, F40T12ES 34W, std ballast, Strip	11		F	1/34	M	46	0.506	8760	4,433	R		4432.56	
150	ralia High Sc	Trophy Cases	3 foot, 1 lamp, F30T12, std ballast	3		F	1/30	M	46	0.138	8760	1,209	R		1208.88	
151	ralia High Sc	Trophy Cases	4 foot, 2 lamp, F40T12ES 34W, std ballast, Strip	3		F	2/34	M	72	0.216	8760	1,892	R		1892.16	
152	ralia High Sc	Trophy Cases	2 foot, 1 lamp, F15T12, std ballast, Strip	4		F	1/15	M	20	0.08	8760	701	N	700.8		
TOTAL				**884**						**93.9**		**341,335**				
Interior Locations										76.9		266,858				
Exterior Locations										17.0		74,478				

	Location			Proposed Lighting*														
				Quantity									Enter	kWh/Yr Adjusted			
Ln #	Loc. #	Location Name (floor, room #, etc.)	Proposed Fixture Description/Model	Ind. Wired	Tandem Wired	Lamp Type	Lamp Watts	Ballast Type	Watts/ Unit	Total kW	Hours/ Yr	kWh/ Yr	N,R or A***	New Fixture	Retro. with kit/comp.	Remain As Is	Quantity
137	ralia High S	Portable Exterior	New CFL Fixture, 1-42 watts - Electronic, Wall Mount TX Flour DC050-42PL-MVLP-41K	1		CF	1/42	E	42	0	4,380	184	N	184			
138	ralia High S	Exterior	New CFL Fixture, 2-42 watts - Electronic, Wallpack Incon 31493B-84TT-41K	2		CF	2/42	E	84	0	4,380	736	N	736			
139	ralia High S	Exterior	New CFL Fixture, 2-42 watts - Electronic, Wallpack Incon 31493B-84TT-41K	1		CF	2/42	E	84	0	4,380	368	N	368			
140	ralia High S	Exterior	New CFL Fixture, 2-42 watts - Electronic, Wallpack Incon 31493B-84TT-41K	3		CF	2/42	E	84	0	4,380	1,104	N	1,104			
141	ralia High S	Exterior	New CFL Fixture, 2-42 watts - Electronic, Ceiling Mount Incon 76793B-84TT-41K	2		CF	2/42	E	84	0	4,380	736	N	736			
142	ralia High S	Exterior	Pulse Start Metal halide, 320 watts Retrofit Kit	1		MH	1/320	M	345	0	4,380	1,511	R		1,511		
143	ralia High S	Exterior Post Top	CFL Recessed Conversion, Modular with reflector and dedicated base 1-42w,HPF, low THD	1		CF	1/42	M	42	0	4,380	184	N	184			
144	ralia High S	Exterior	New T5HO Fixture, 4' 4 lamp, F54T5HO, Slipfitter, Pole Fixture with Sensor	1		F	4/54	E	234	0	4,380	1,025	N	1,025			
145	ralia High S	Exterior	2 lamp, 4', F32T8 Electronic ballast	4		F	2/32	E	60	0	4,380	1,051	A			1,051	
146	ralia High S	Loading Docks	New CFL Fixture, 2-42 watts - Electronic, Wallpack Incon 31493B-84TT-41K	1		CF	2/42	E	84	0	4,380	368	N	368			
147	ralia High S	Wresling Build Exterior	New CFL Fixture, 1-42 watts - Electronic, Wall Mount TX Flour DC050-42PL-MVLP-41K	2		CF	1/42	E	42	0	4,380	368	N	368			
148	ralia High S	Main Parking Lot	New T5HO Fixture, 4' 4 lamp, F54T5HO 480V, Side Arm Pole Fixture with Sensor & (7)- Post tops & Bullhorns	28		F	4/54	E	234	7	4,380	28,698	N	28,698			
149	ralia High S	Trophy Cases	4', 1 lamp, F28T8/E RW (Reduced Wattage) ballast HALCO EP132IS/L/MV/HE	11		F	1/28	E	22	0	8,760	2,120	R		2,120		
150	ralia High S	Trophy Cases	3', 1 lamp, F25T8/E RW (Reduced Wattage) ballast HALCO EP132IS/L/MV/HE	3		F	1/25	E	21	0	8,760	552	R		552		
151	ralia High S	Trophy Cases	4', 2 lamp, F28T8/E RW (Reduced Wattage) ballast HALCO EP232IS/L/MV/HE	3		F	2/28	E	42	0	8,760	1,104	R		1,104		
152	ralia High S	Trophy Cases	2', 1 lamp, F17T8/E, RLO, Strip Fixture TX Flour S117MV	4		F	1/17	E	17	0	8,760	596	N	596			
TOTAL										**48.4**		**176,837**					
Interior Locations										40.1		140,321					
Exterior Locations										8.3		36,516					

		Interior	Exterior
Baseline Total kWh	341,335	266,858	74,478
Baseline Total kW	93.9	77	17.0
Baseline Annual kW	1,127.1	923.1	204.0
		Interior	Exterior
Proposed Total kWh	176,837	140,321	36,516
Proposed Total kW	48.4	40	8.3
Proposed Annual kW	580.7	480.6	100.0
		Interior	Exterior
Savings kWh	164,498	126,536	37,961
Savings kW	45.5	36.9	8.7

*** N=New Fixture; R=Retrofit with kit/component; A=As Is

B. Water Measure Data Sheets

SLOAN.

Efficiency Series

Model

WEUS-1000.1403-0.13 SMOOTH

OPTIMA Systems Battery Powered HEU Flushometer and Urinal

DESCRIPTION

Complete HEU system with exposed, battery powered, sensor activated, Royal® OPTIMA® SMOOTH™ urinal Flushometer and vitreous china urinal.

Flush Cycle
Model WEUS 1000.1403-0.13 SMOOTH
(0.13 gpf/ 0.5 Lpf)

HEU
HIGH-EFFICIENCY URINAL

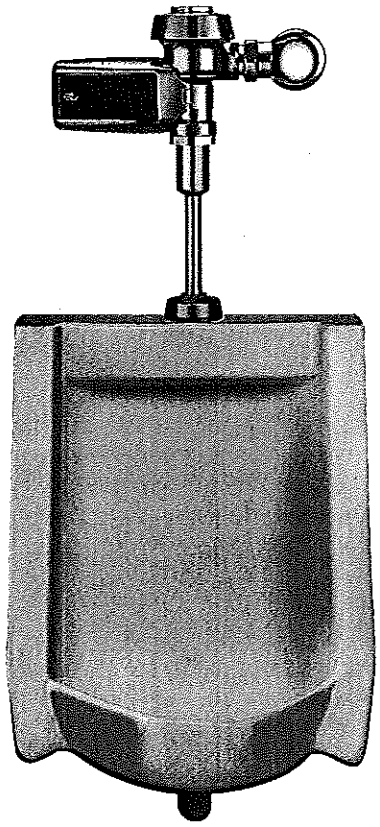

Meets the American Disabilities Guidlines and ANSI A117.1 requirements when installed according to these requirements.

NOTE: Plumbing System Requirements
√ Minimum Flowing Pressure: 25 PSI

SPECIFICATIONS

Outlet, exposed, diaphragm type, chrome plated urinal Flushometer and vitreous china urinal with the following features:

Flushometer

- PERMEX® Synthetic Rubber Diaphragm with Dual Filtered Fixed Bypass
- ADA compliant metal oscillating Non-Hold-Open Handle with Triple Seal Handle Packing
- 3/4" I.P.S. Screwdriver Bak-Chek® Angle Stop
- High Back Pressure Vacuum Breaker Flush Connection with One-piece Bottom Hex Coupling Nut
- Spud Coupling and Flange for 3/4" Top Spud
- Sweat Solder Adapter w/Cover Tube and Cast Wall Flange w/Set Screw
- High copper, low zinc brass castings for dezincification resistance
- Non-Hold-Open Handle, Fixed Metering Bypass and no external volume adjustment to ensure water conservation
- Flush accuracy controlled by CID® technology
- Diaphragm, Handle Packing, Stop Seat and Vacuum Breaker molded from PERMEX® rubber compound for chloramine resistance
- Valve Body, Cover, Tailpiece and Control Stop shall be in conformance with ASTM Alloy Classification for Semi-Red Brass. Valve shall be in compliance to the applicable sections of ASSE 1037, ANSI/ASME A112.19.2, and Military Specification V-29193.

OPTIMA® SMOOTH™ Unit

- ADA compliant OPTIMA® SMOOTH™ battery powered infrared sensor for automatic "Hands-free" operation
- Sensor with automatic range adjustment
- Chrome plated metal sensor housing
- Mechanical Manual Override Flush Handle
- Four (4) size C batteries included
- "Low Battery" flashing LED
- "User in View" flashing LED
- 25 to 80 psi operating range
- Vandal resistant 1/8" ball-type hex key included

Urinal

- Wall hung vitreous china
- Washdown flushing action
- 3/4" I.P.S. top spud inlet
- 2" NPT outlet flange
- All mounting hardware included
- Integral flushing rim
- 100 % factory flush tested
- Compatible with Jay R. Smith Carrier 0636 or 0637

FEATURES

ADA Compliant

Automatic
Sloan SMOOTH™ equipped Flushometers provide the ultimate in sanitary protection and automatic operation. There is no need for AC hookups or wall alterations. The Flushometer operates by means of a battery powered infrared sensor. True mechanical manual override button enables the Flushometer to work in the event of a power failure. State-of-the-art technology enables activation of a manual override without "double flushing" occurring as the user departs (locks out sensor for approximately 10 seconds).

Hygienic
The Royal® OPTIMA® SMOOTH™ Flushometer System is the next advancement in hygiene. User makes no physical contact with the Flushometer surface except to initiate the Mechanical Manual Override Flush Handle when required. Helps control the spread of infectious diseases.

Economical
Sloan installed batteries speed installation and provide years of metered flushing to control the use of water and energy. Batteries can be changed without turning off the water.

Warranty
3 year (limited)

U.S. GREEN BUILDING COUNCIL MEMBER

EPA GREEN POWER PARTNER

Sloan Valve Company is buying renewable energy certificates to meet 100% of the company's purchased electricity use at its Franklin Park, Illinois facility.

This space for Architect/Engineer approval

Job Name _____ Date _____

Model Specified _____ Quantity _____

Variations Specified _____

Customer/Wholesaler _____

Contractor _____

Architect _____

The information contained in this document is subject to change without notice.

SLOAN.

Sloan Valve Company
10500 Seymour Avenue
Franklin Park, IL 60131
Phone: 1-800-9-VALVE-9 (982-5839)
or 1-847-671-4300
Fax: 1-800-447-8329 or 1-847-671-4380
www.sloanvalve.com

Copyright © 2009 Sloan Valve Company
Printed in the U.S.A. Rev. 0a (08/09)

SLOAN.

Efficiency Series

Model

WEUS-1000.1403-0.13 SMOOTH

OPTIMA Systems Battery Powered HEU Flushometer and Urinal

DESCRIPTION

Complete HEU system with exposed, battery powered, sensor activated, Royal® OPTIMA® SMOOTH™ urinal Flushometer and vitreous china urinal.

Flush Cycle
Model WEUS 1000.1403-0.13 SMOOTH
(0.13 gpf/0.5 Lpf)

ELECTRICAL SPECIFICATIONS

- **Control Circuit**
  6 VDC input, 8 second arming delay, 72 hour Sentinel Flush
- **OPTIMA® Sensor Range**
  Normal Range (recommended for Water Closets) with 2 – 3 second flush delay:
  26" – 32" (660 mm – 813 mm)
  Normal Range (recommended for Water Closets) with 1 – 2 second flush delay:
  26" – 32" (660 mm – 813 mm)
  Reduced Range (recommended for Urinals) with 1 – 2 second flush delay:
  20" – 26" (508 mm – 660 mm)
- **OPTIMA® Sensor Type**
  Active Infrared with automatic adjustment
- **Battery Type**
  (4) Size C Alkaline
- **Battery Life**
  2 Years @ 4,000 flushes/month
- **Indicator Lights**
  User in view/low battery
- **Operating Pressure**
  25 – 80 psi (172-552 kPa)

OPERATION

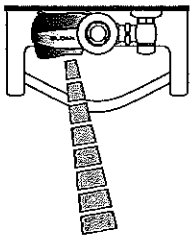

1. A continuous, invisible light beam is emitted from the SMOOTH™ unit's Infrared Sensor.

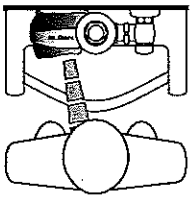

2. When the user enters the sensor's effective range, the Red LED light in the sensor window flashes for eight seconds. After eight seconds of sensing the user, the light will stop flashing and the unit waits for the user to step away before initiating a flush cycle.

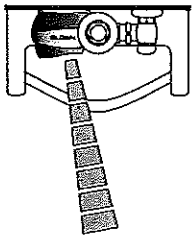

3. When the user steps away, the unit initiates a flush cycle. The unit then automatically resets and is ready for the next user.

DIMENSIONS

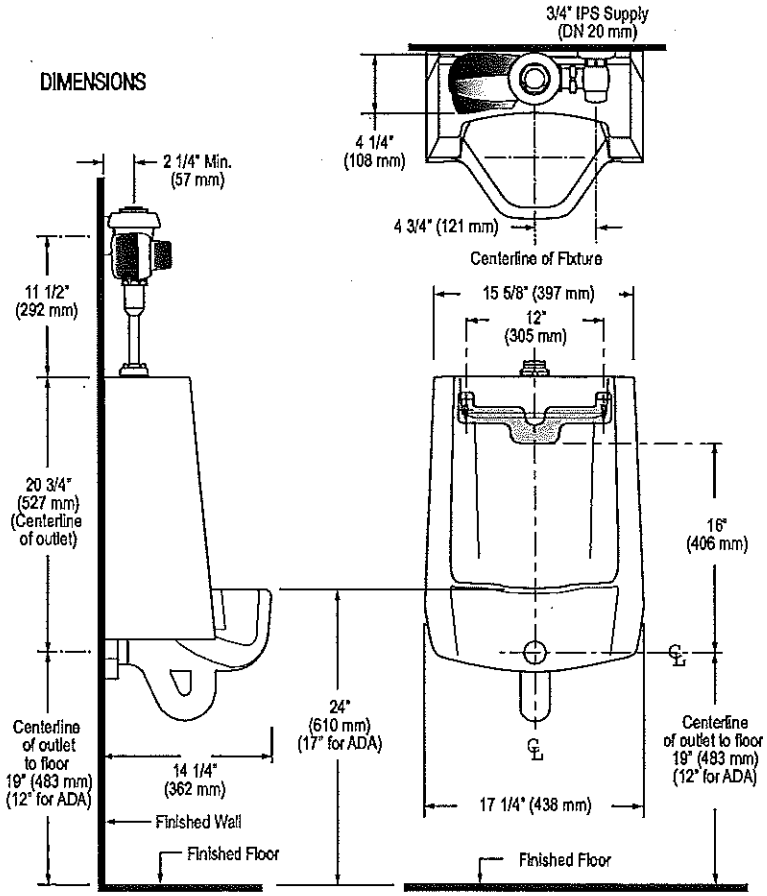

SLOAN.

Sloan Valve Company
10500 Seymour Avenue
Franklin Park, IL 60131
Phone: 1-800-9-VALVE-9 (982-5839)
or 1-847-671-4300
Fax: 1-800-447-8329 or 1-847-671-4380
www.sloanvalve.com

Copyright © 2009 Sloan Valve Company

Printed in the U.S.A. Rev. 0a (08/09)

BEMIS®
COMMERCIAL

COMMERCIAL PLASTIC SEATS

SPEC THE BEST 300 SERIES Stainless Steel WITH STA-TITE®

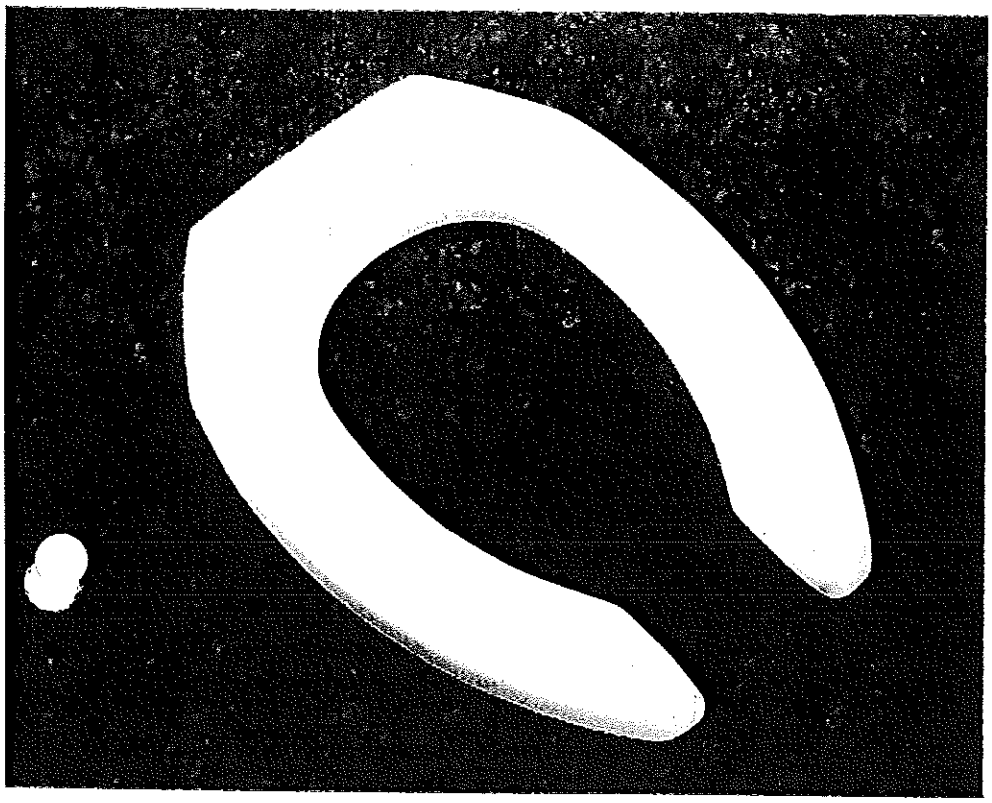

1955CT

Seats shall be No. _____ as manufactured by Bemis Manufacturing Co. Seats shall be heavy weight and injection-molded of solid plastic. Seats shall be open front less cover for elongated bowl and feature large molded-in bumpers. Seats shall have STA-TITE®, Commercial Fastening System™, featuring external check hinges with 300 Series stainless steel posts and pintles that stop seat 11 degrees beyond vertical.

Color to be _____.
(Specify white or fixture manufacturer's color.)

Hinges shall be 1955CT / 1955SSCT.
(Circle model based on description below.)

1955CT STA-TITE®, external check hinge stops seat 11° beyond vertical.

1955SSCT STA-TITE®, Stainless steel, self-sustaining and external check hinge holds seat in any raised position up to 11° beyond vertical.

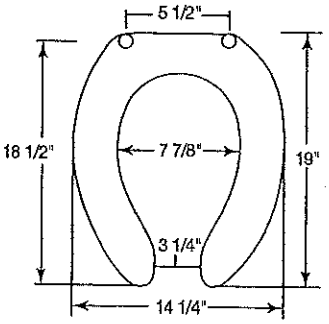

Ring thickness is 1"
Ring thickness including the bumper is 1-3/16"

STA-TITE®

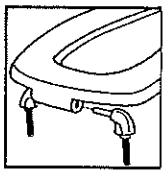

Assemble hinges.

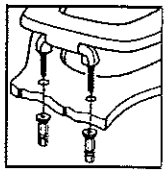

Finger-tighten fastening nuts.

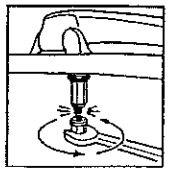

Using wrench, tighten until lower portion shears off.

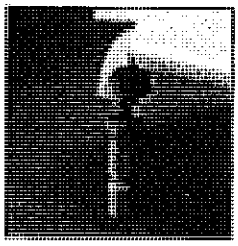

STA-TITE®, COMMERCIAL FASTENING SYSTEM™, ONE-PIECE INTEGRATED NUT AND WASHER

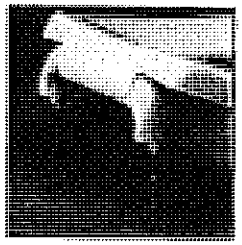

CONCEALED CHECK HINGE

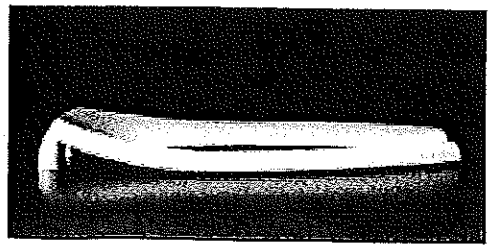

CONTOURED SEAT

Bemis Manufacturing Co., Sheboygan Falls, WI 53085
www.BemisSeats.com
Phone: 920-467-4621 800-558-7651 Fax: 920-467-8573

SLOAN®
Efficiency Series

Model
WETS 2050.1001-1.28
Manual HET Flushometer and Wall Hung Water Closet

DESCRIPTION

Complete system with exposed manual Royal® Flushometer and vitreous china wall hung water closet.

Flush Cycle
Model WETS-2050.1001-1.28 (1.28 gpf/4.8 Lpf)

HET
HIGH-EFFICIENCY TOILET

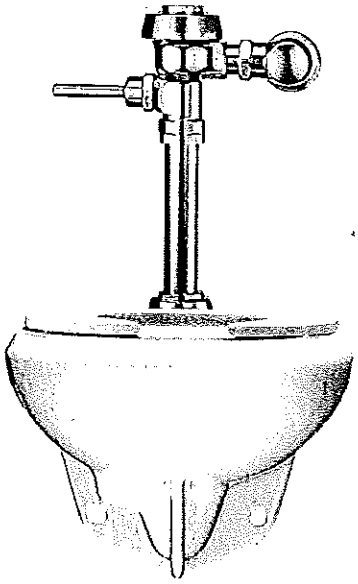

Meets the American Disabilities Guidlines and ANSI A117.1 requirements when installed according to these requirements.

NOTE:
Plumbing System Requirements
- Minimum Flowing Pressure: 25 PSI
- Minimum Flow Rate: 18 GPM

SPECIFICATIONS

These products when installed as a combination as shown, meet the Bub American Actb requirements

Quiet, exposed, diaphragm type, chrome plated closet Flushometer and vitreous china water closet with the following features:

Flushometer
- PERMEX® Synthetic Rubber Diaphragm with Dual Filtered Fixed Bypass
- ADA compliant metal oscillating Non-Hold-Open Handle with Triple Seal Handle Packing
- 1" I.P.S. Screwdriver Bak-Chek® Angle Stop
- Free spinning Vandal Resistant Stop Cap
- Adjustable Tailpiece
- High Back Pressure Vacuum Breaker Flush Connection with One-piece Bottom Hex Coupling Nut
- Spud Coupling and Flange for 1-1/2" Top Spud
- Sweat Solder Adapter with Cover Tube and Cast Wall Flange with Set Screw
- High copper, low zinc brass castings for dezincification resistance
- Non-Hold-Open Handle, Fixed Metering Bypass and no external volume adjustment to ensure water conservation
- Flush accuracy controlled by CID® technology
- Diaphragm, Handle Packing, Stop Seat and Vacuum Breaker molded from PERMEX® rubber compound for chloramine resistance
- Valve Body, Cover, Tailpiece and Control Step shall be in conformance with ASTM Alloy Classification for Semi-Red Brass. Valve shall be in compliance to the applicable sections of ASSE 1037, ANSI/ASME A112.19.2.

Water Closet
- Wall hung vitreous china elongated bowl
- Siphon jet flushing action
- 1-1/2" I.P.S. top spud inlet
- 2" fully glazed trapway diameter
- Integral flushing rim
- Water spot area 9 1/2" x 8 1/4"
- Mounting hardware, carrier and toilet seat not included
- Compatible with toilet seat models: Olsonite 10CT, Bemis 1955CT & Church Commercial 295CT
- Water closet shall be in compliance to the applicable sections of ASME A112.19.2/CSA B45.1

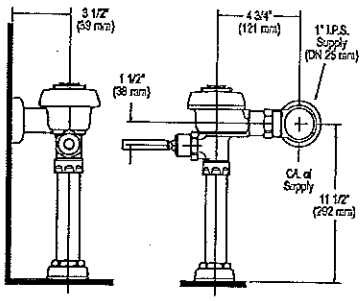

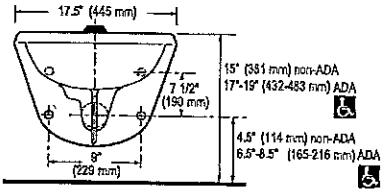

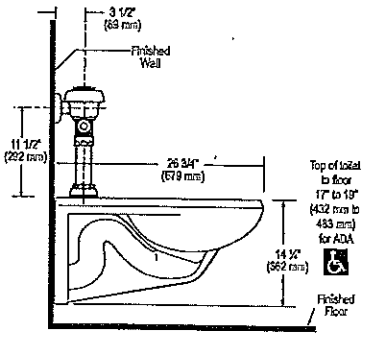

Made In The USA

EPA GREEN POWER PARTNER

Sloan Valve Company is buying renewable energy certificates to meet 100% of the company's purchased electricity use at its Franklin Park, Illinois facility.

This space for Architect/Engineer approval

Job Name _____ Date _____

Model Specified _____ Quantity _____

Variations Specified _____

Customer/Wholesaler _____

Contractor _____

Architect _____

The information contained in this document is subject to change without notice.

SLOAN®
Sloan Valve Company
10500 Seymour Avenue
Franklin Park, IL 60131
Phone: 1-800-9-VALVE-9 (982-5839)
or 1-847-671-4300
Fax: 1-800-447-8329 or 1-847-671-4380
www.sloanvalve.com

Copyright © 2009 Sloan Valve Company
Printed in the U.S.A. Rev. 0a (09/09)

SLOAN.
Efficiency Series

Model
WETS 2020.1001-1.28
Manual HET Flushometer and ADA Compliant Water Closet

DESCRIPTION

Complete HET system with exposed manual Royal® closet Flushometer and vitreous china ADA compliant water closet.

Flush Cycle
Model WETS 2020.1001-1.28 (1.28 gpf/4.8 Lpf)

HET
HIGH-EFFICIENCY TOILET

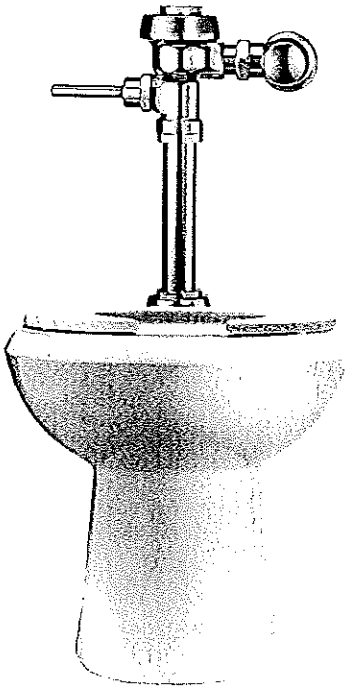

Meets the American Disabilities guidelines and ANSI A117.1 requirements when installed according to these requirements

NOTE:
Plumbing System Requirements
- Minimum Flowing Pressure: 25 PSI
- Minimum Flow Rate: 18 GPM

SPECIFICATIONS

These products when installed as a combination as shown, meet the "Buy American Act" requirements

Quiet, exposed, diaphragm type, chrome plated closet Flushometer and vitreous china ADA compliant water closet with the following features:

Flushometer
- PERMEX® Synthetic Rubber Diaphragm with Dual Filtered Fixed Bypass
- ADA compliant metal oscillating Non-Hold-Open Handle with Triple Seal Handle Packing
- 1" I.P.S. Screwdriver Bak-Chek® Angle Stop
- Free spinning Vandal Resistant Stop Cap
- Adjustable Tailpiece
- High Back Pressure Vacuum Breaker Flush Connection with One-piece Bottom Hex Coupling Nut
- Spud Coupling and Flange for 1-1/2" Top Spud
- Sweat Solder Adapter w/Cover Tube and Cast Wall Flange w/Set Screw
- High copper, low zinc brass castings for dezincification resistance
- Non-Hold-Open Handle, Fixed Metering Bypass and no external volume adjustment to ensure water conservation
- Flush accuracy controlled by CID® technology
- Diaphragm, Handle Packing, Stop Seat and Vacuum Breaker molded from PERMEX® rubber compound for chloramine resistance
- Valve Body, Cover, Tailpiece and Control Stop shall be in conformance with ASTM Alloy Classification for Semi-Red Brass. Valve shall be in compliance to the applicable sections of ASSE 1037, ANSI/ASME A112.19.2.

Water Closet
- ADA compliant
- Floor Mounted
- Vitreous china
- Elongated bowl
- 1-1/2" I.P.S. top spud inlet
- 2" trapway diameter
- Closet bolts and caps included
- Integral flushing rim
- 100 % factory flush tested
- Siphon jet flush
- Seat not included
  Compatible with toilet seat models:
  Olsonite 10CT, Bemis 1955CT &
  Church Commercial 295CT

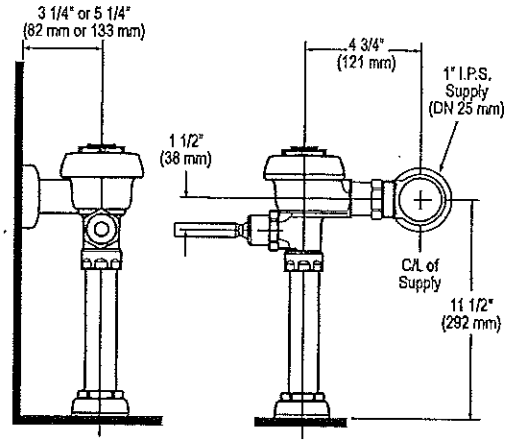

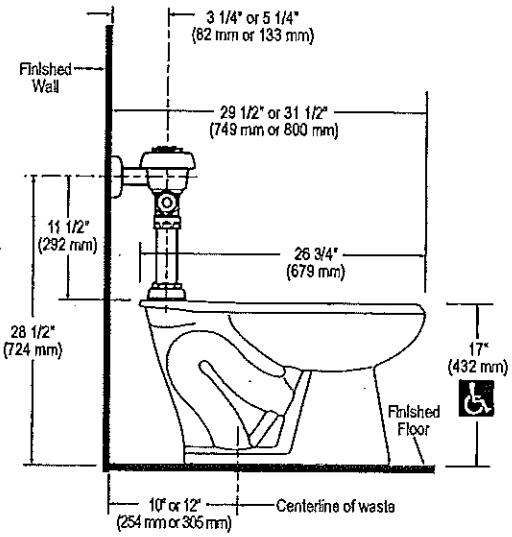

Made In The
USA

EPA GREEN POWER PARTNER
Sloan Valve Company is buying renewable energy certificates to meet 100% of the company's purchased electricity use at its Franklin Park, Illinois facility.

This space for Architect/Engineer approval

Job Name	Date
Model Specified	Quantity
Variations Specified	
Customer/Wholesaler	
Contractor	
Architect	

The information contained in this document is subject to change without notice.

SLOAN.

Sloan Valve Company
10500 Seymour Avenue,
Franklin Park, IL 60131
Phone: 1-800-9-VALVE-9 (982-5839)
or 1-847-671-4300
Fax: 1-800-447-8329 or 1-847-671-4380
www.sloanvalve.com

Copyright © 2009 Sloan Valve Company
Printed in the U.S.A. Rev. 0a (08/09)

C. Boiler Efficiency Test Tapes

Boiler 1

BACHARACH, INC.
PCA 3
SN: SV1014

Time: 01:10:48 PM
Date: 12/04/12

Fuel
NGAS

O_2	8.7 %
CO	3 ppm
Eff	89.4 %
CO_2	6.9 %
T-Stk	120 °F
T-Air	76.8 °F
EA	63.1 %
CO(0)	6 ppm
NO	*** ppm
NO_2	*** ppm
NOx	*** ppm
SO_2	*** ppm
NO(0)	*** ppm
NO_2(0)	*** ppm
NOx(0)	*** ppm
SO_2(0)	*** ppm

Comments: CMS Low Fire
127°F / 132°F

Boiler 2

BACHARACH, INC.
PCA 3
SN: SV1014

Time: 01:07:42 PM
Date: 12/04/12

Fuel
NGAS

O_2	7.8 %
CO	0 ppm
Eff	89.4 %
CO_2	7.4 %
T-Stk	121 °F
T-Air	76.1 °F
EA	52.9 %
CO(0)	1 ppm
NO	*** ppm
NO_2	*** ppm
NOx	*** ppm
SO_2	*** ppm
NO(0)	*** ppm
NO_2(0)	*** ppm
NOx(0)	*** ppm
SO_2(0)	*** ppm

Comments: CMS Low Fire
128°F / 135°F

Boiler 2

BACHARACH, INC.
PCA 3
SN: SV1014

==========

Time: 05:58:39 PM
Date: 12/04/12

Fuel
NGAS

O_2	7.3 %
CO	4 ppm
Eff	89.8 %
CO_2	7.7 %
T-Stk	121 °F
T-Air	69.0 °F
EA	48.2 %
CO(0)	6 ppm
NO	*** ppm
NO_2	*** ppm
NOx	*** ppm
SO_2	*** ppm
NO(0)	*** ppm
NO_2(0)	*** ppm
NOx(0)	*** ppm
SO_2(0)	*** ppm

Comments: EES Low Fire
136°F / 143°F

BACHARACH, INC.
PCA 3
SN: SV1014

==========

Time: 06:42:07 PM
Date: 12/04/12

Fuel
NGAS

O_2	5.9 %
CO	4 ppm
Eff	93.0 %
CO_2	8.5 %
T-Stk	115 °F
T-Air	66.4 °F
EA	35.1 %
CO(0)	6 ppm
NO	*** ppm
NO_2	*** ppm
NOx	*** ppm
SO_2	*** ppm
NO(0)	*** ppm
NO_2(0)	*** ppm
NOx(0)	*** ppm
SO_2(0)	*** ppm

Comments: JLES
110°F / 155°F

D. Utility Rates

Below is an example of how Ameresco Quantum calculates weighted average utility rates when a facility has multiple meters and rate schedules for a single commodity. For this example there are two meters measuring electric consumption (kWh) and meter 1 is on a rate schedule of $0.10/kWh and meter 2 is $0.05/kWh. If meter 1 had a total consumption of 900 kWh for the period and meter 2 had a total consumption of 100 kWh, then the weighted average rate for the two meters would be:

$$(\$0.10 * \frac{900}{900+100}) + (\$0.05 * \frac{100}{900+100}) = \$0.095 / kWh$$

Appendix 3: Resumes

Resume of Michael J. O'Connor

Education & Training

- M.B.A., College of William & Mary, 1988
- B.S. Mechanical Engineering, Clarkson University, 1984

Professional Registration

- Washington, Mechanical Engineer, 1992

Experience

Mr. O'Connor has been involved in the engineering, development, construction, and project management of energy and water savings performance contracts for over fifteen years, working extensively with the State of Washington, school districts, municipalities, and utilities to develop and implement energy and water conservation projects. He has supervised energy and water projects in over 60 million square feet of building space, generating over $70 million in performance contracting projects, and saving over $5.5 million in energy and water costs per year. Mr. O'Connor has led the project development for dozens of energy projects, and has prepared energy studies, financial analyses, and contracts. He has managed the engineering of projects and performed or managed construction management, balancing and commissioning, and monitoring & verification.

Prior Experience:

Prior to his career in energy and water conservation projects, Mr. O'Connor was a test engineer on nuclear aircraft carriers at Newport News Shipbuilding in Virginia, and an automated system test engineer at Babcock & Wilcox in Lynchburg, VA. In Lynchburg, he tested software and hardware used in the manufacturing and quality assurance of nuclear reactor cores

Resume of Grant Thorsland

Education & Training

- Green River Community College, 1990
- Computerized (DDC) EMCS Training, Certified Electrical Laddex Training,
- Alerton, Barber Coleman, Johnson Controls, Landis & Gyr Powers, Staefa Controls Training
- NADCA and ASHRAE Sponsored

Experience

Mr. Thorsland has performed project management on a wide range of energy projects; including municipalities, schools, office buildings and hospital facilities. He has performed energy audits and cost estimates for over $25 Million in performance contracting projects, and is adept at baseline monitoring and field testing, engineering calculations, and cost estimating of proposed measures. Mr. Thorsland has worked extensively in all phases of testing, adjusting & balancing of constant and variable volume air and hydronic distribution systems and has vast experience in field engineering and the troubleshooting of deficient air and hydronic conveying systems.

Projects in which Mr. Thorsland has played a key role include:

- City of Olympia, City of Edmonds,
- City of Longview,
- Kitsap County,
- Eastern State Hospital,
- Monroe Correctional Center
- Numerous School Districts

Prior Experience:

Mr. Thorsland was a test & balance technician with NIAC in Kent, WA and Penn Air Control in Las Vegas, NV, served in the US Army as a Tank Commander and was, honorably discharged at the E-5 grade.

Resume of Lonn A. Inman

Education & Training

- Green River Community College, Advanced Mathematics and Machine Technology
- National Environmental Balancing Bureau (NEBB) Certified, Air and Hydronics TAB Supervisor
- DDC Energy Management Control System Training: Alerton Controls, Barber Colman, Johnson Controls, Landis & Gyr Powers / Siemens, Delta Controls, Staefa Controls, Novar Controls
- Nuclear Work Environment Certification, Washington Public Power Supply System, Hanford WA
- CTI Cooling Tower Certification Training, Baltimore Air Coil
- City of Seattle Fire and Life Safety Systems Certified

Experience

Mr. Inman has over seven years experience managing and performing commercial and industrial electrical contracting and energy management controls system installations. He served as a NEBB certified TAB supervisor and has worked extensively in all phases of testing, adjusting & balancing of constant and variable volume air and hydronic distribution systems in accordance with NEBB & AABC procedural standards. He is adept at analyzing pneumatic/electric/DDC controls systems and components; sound and vibration testing; indoor air quality remediation; performance testing and evaluation of fans, pumps, boilers, chillers, cooling towers, economizers, heat recovery systems and electrical systems. Mr. Inman has vast experience in field engineering and the troubleshooting of deficient air and hydronic conveying systems. He has planned, managed and executed building commissioning projects.

Mr. Inman has audited and commissioned over $30 Million in performance contracting projects. He acts as Project Manager as well as Project Engineer on various projects. He is adept at baseline monitoring and field testing; evaluating facility operation and maintenance procedures for mechanical and electrical systems; analyzing trend data and field test data; engineering calculations, and cost estimating of proposed measures.

Projects in which Mr. Inman has played a key role include:

- Seattle Community College
- Green River Community College
- Bellingham Technical College
- Eastern State Hospital
- Kitsap County Facilities
- Western State Hospital
- Washington Correction Center for Women
- Washington DOC Mission Creek
- WSR Monroe Correctional Complex
- Washington DOC Olympic Correction Center

Prior Experience:

Prior to his career in energy and water conservation projects, Mr. Inman worked with NIAC Corporation in Kent, Washington as a Project Manager for TAB and commissioning projects. Prior to this, he was a test & balance and controls technician for Group Health Cooperative in Seattle.

Resume of Doug Rogers

Education & Training

- Certified Energy Manager
- Factory training programs for Energy Management Systems including TAC, Barber Colman, Tridium,

Experience

Mr. Rogers has more than twenty years of experience developing energy savings performance contracts in K-12 school, municipal, higher education and other market segments and is familiar with design, construction, and operation of mechanical systems for commercial, industrial, educational, government, and other facilities. Previous experience has included programming, troubleshooting and field engineering Energy Management Systems, as well as sales and account management roles with a leading building control vendor.

Ameresco Quantum projects in which Mr. Rogers has played a key role include:

- South Puget Sound Community College
- Port Angeles School District
- Peninsula School District
- Walla Walla School District
- Renton School District

Resume of Paul Ristow

Education & Training

- B.S. Mechanical Engineering, University of Alaska, Fairbanks, 1996

Professional Registration

- Professional Engineers License, Washington, Mechanical Engineer, 2003
- LEED Accredited Professional, New Construction (USGBC v2.2)

Experience:

Mr. Ristow has been involved in the engineering, development, construction, and project management of energy and water savings performance contracts for several years, working extensively with the State of Washington, school districts, colleges, municipalities, and utilities to develop and implement energy and water conservation projects. He has extensive engineering design experience with a variety of building mechanical systems including air handling, steam distribution, central heating and chiller plants, industrial process piping and domestic water systems. He also has experience in monitoring and field testing, utility analysis, and calculations for energy audits.

Mr. Ristow also has knowledge of software and techniques for analysis, energy modeling and design for new construction and major renovation projects, including sustainability strategies for USGBC-LEED certification. He has developed Measurement & Verification plans for numerous LEED-Certified facilities around the nation.

Projects in which Mr. Ristow played a key role include:

- Bates Technical College
- City of Longview
- Olympic College
- DSHS Facilities including the Child Study & Treatment Center and Western State Hospital
- Numerous School Districts including Kiona-Benton, Wenatchee, Shelton and Washtucna.

Prior Experience:

Prior to his career in energy and water conservation projects, Mr. Ristow worked in consulting firms over thirteen years as a mechanical engineer for projects with public and private institutions.

Resume of Randy McPherson

Education & Training

- Local 66 Sheet Metal Apprenticeship training – 1993-1997 – Journeyman;
- Seattle University – 1986-1989

Licenses and Certifications

- Medical Gas & Silver Soldier Certification
- Pressure Vessel Welding (ASME) Certification

Experience

Mr. McPherson has twenty plus years of experience and expertise in all facets of the construction industry. He has had successful completion of many fast track million dollar projects and is proficient in developing partnerships with owners, architects, engineers, local building officials, suppliers and contractors with an emphasis on costs and completion schedule. Mr. McPherson is versed in project estimating, design, building codes, safety regulations, contracts, site management (including direction of work force), procurement of materials and on-site installations.

Ameresco Quantum projects in which Mr. McPherson played a key role include:

- WA State Patrol (offices statewide), City of Edmonds WWTP, WA Department of Corrections Clallam Bay, Central Kitsap School District, North Kitsap School District, Pateros School District, Selah School District,

Resume of Jason Hite

Education & Training

- Associate of Occupational Studies/Air Conditioning and Refrigeration Technology- 2007
- Various Commissioning Courses and Certificates

Experience

Mr. Hite has 12 yeas of experience in the energy-related engineering and services field. He has performed commissioning of HVAC Systems, lighting control systems, fire alarm systems and building security systems. He has also performed the Startup, commissioning, balancing and measurement of power consumption of major HVAC system components including fans, variable speed drives, pumps, chillers, cooling towers, boilers, terminal boxes, and electric heating coils. Mr. Hite performed calibration of airflow, pressure, and temperature sensors for EMS control systems, testing of HVAC system components to determine equipment capacity and has an in depth knowledge of control systems, system analysis and computer skills.

Projects in which Mr. Hite played a key role include:

- WA Department of Corrections Cedar Creek and Stafford Creek
- WA Department of Corrections Stafford Creek
- WA School for the Deaf
- DSHS Special Commitment Center
- WA Dept. Veteran Affairs-Retsil
- North Kitsap School District, Battleground School District, Bremerton School District, South Kitsap School District

Resume of Daniel Fishbone

Education & Training

- Washington University in St Louis, BSME (cum laude)
- Combustion & Energy Research Lab Washington University, Independent Study
- National Science Foundation Undergraduate Research
- 248th Civil Engineer Flight, Washington Air National Guard

Licenses and Certifications

- LEED AP
- EIT (PE licensing track)

Experience:

Mr. Fishbone is a key source in engineering and auditing performance contracting projects. He is adept at baseline monitoring and field testing and engineering calculations. Prior to joining Ameresco Quantum Mr. Fishbone spent two years with Arup, a worldwide design and engineering firm where he assisted in the construction administration of the Art Institute of Chicago, Modern Wing in Chicago, was an assistant Mechanical Engineer for the Doha Convention Center and Tower in Doha, Qatar, was responsible for mechanical load testing and energy use for LEED qualification for the Delta Airlines Terminal 3 and Terminal 4 Concourse Extensions at JFK International Airport in New York, among other projects.

Projects in which Mr. Fishbone played a key role include:

South Kitsap School District, Washington State Patrol Offices, Skagit Valley College.

Resume of Pete Babington

Education & Training

- University of Washington-Tacoma, 2007 – 2008, Commercial Real Estate certificate program
- University of Washington, 1984 – 1988, Construction Management
- Pacific Lutheran University, 1980 – 1984. Biology

Licenses and Certifications

- Medical Gas & Silver Solder Certification
- Pressure Vessel Welding (ASME) Certification

Experience

Mr. Babington has over 24 years of experience in construction and capital project management and is well versed in all aspects of these activities, including bidding, sub-contractor management, supervision of on-site installations, contract administration, change orders, safety, quality control, occupant moves, close-out, and commissioning. From 2005 to 2009 he successfully completed numerous multi-million dollar projects at community colleges in Washington and is proficient at developing partnerships with customers, architects, engineers, local building officials, suppliers and contractors with an emphasis on cost containment and on-time completion.

Projects in which Mr. Babington played a key role include:

- Auburn School District,
- Shelton School District
- Montessano School District
- Orting Soldiers Home and Colony,
- DOC Airway Heights,
- Skagit Valley College,
- Bremerton School District,
- Bellingham School District,
- Kiona-Benton School District.

Resume of Deborah Larson

Education & Training

- Saint Martin's College – Master of Business Administration;
- Bachelor of Science in Mechanical Engineering

Licenses and Certifications

- LEED AP
- ISO 9000 Lead Auditor

Experience:

Ms. Larson is a key source in engineering and auditing performance contracting projects. She is adept baseline monitoring and field testing, engineering calculations, developing proposed measures. Ms. Larsen has a multitude of experience in energy conservation projects. She has worked as project manager, developing specifications for inclusion in contract documents, evaluating systems and controls for possible savings as well as a design engineer and commissioning agent, working closely with clients and contractors to evaluate installation and functionality of building equipment and systems. Ms. Larsen has experience in field engineering and troubleshooting with several proprietary energy management systems.

Ameresco Quantum projects in which Ms. Larsen played a key role include:

- WA Department of Corrections projects at Olympic View Corrections Center and
- WA Department of Veteran Affairs, Retsil,
- North Kitsap School District, Central Kitsap School District, Aberdeen School District, Cosmopolis School District, Montesano School District,

Prior Experience:

- Prior to her career at Ameresco Quantum, Ms. Larsen worked with Keithly Barber Associates as a Senior Project Manager in Energy Conservation projects, and Heery International, Inc. as a Commissioning Agent.

Resume of Jeremy Keller

Education & Training

- M.B.A., Oregon State University, 2007
- B.S. Mechanical Engineering,/B.S. Physics, University of Washington, 2005

Accreditations and Licenses

- Engineer in Training Certificate, Passed Fundamentals of Engineering Exam
- IGSHPA Certified Ground Source Heat Pump Designer and Installer

Experience

Prior to joining Ameresco Quantum, Mr. Keller was a Mechanical Engineer and Project Developer at Northwest Mechanical, Inc. where he specialized in the design and installation of hydronic, ground source heat pump, and solar thermal systems. In addition, Mr. Keller's career to date has included work for a major Northwest air conditioning equipment distributor, and the design, installation and servicing of commercial security, fire, video, and access systems.

Energy Projects in which Mr. Keller played a key role include:

- Retsil Veterans Administration Home
- Central Kitsap School District
- South Kitsap School District
- Bellevue College
- Issaquah School District
- Renton School District: Hazen Pool
- Clover Park Technical College

Resume for Bill Klein

Education & Training

- Construction Management / Project Management Level 1 Certification, 2009
- Local 66 Foreman / Management Training, 2004
- Local 66 Sheet Metal Building Trades Apprenticeship, 1997-2002

Accreditation

- Local 66 Sheet Metal Building Trades Journeyman, 2001

Experience

Mr. Klein has performed construction management for over six years on a wide range of large commercial and industrial projects. His construction management expertise includes: management and completion of projects on time and on budget; client/customer relations; management of and communication with general contractors and subcontractors; coordination with site supervision on scope and schedule, and regular review of work in field; development and maintenance of equipment requisition logs and materials submittals; writing, tracking and reviewing questions to design team; review of design changes and labor and material costs for accuracy; invoice preparation, financial performance tracking, completion of job close-out procedures, successful turnover of buildings, and approval of invoices for payment; supervise sheet metal fabrication, welding, soldering, brazing, as well as detailing of HVAC and architectural metals; tracking of deliveries and back orders; management of product development and specifications compliance; proficiency in blueprint reading, AutoCAD, and Quick Pen.

Prior Experience

Before beginning his career in the energy efficiency / conservation, Mr. Klein worked in the mechanical construction industry.

- Seattle Fire Station #10 /Emergency Center for all of Seattle Metro
- Kent Events Center "ShoWare Center"
- U.W. Savery Hall / City Multi-System
- U.W. Foster School of Business

Resume of Kyle Jones

Education & Training

- BA Architecture, University of Colorado at Boulder, 2002

Accreditation & Certification

- LEED Accreditation Professional in New Construction, 2009
- International Building Code 2009 Certificate
- RS Means Certificate for Professional Estimating, 2006

Experience

Mr. Jones has performed over 5 years of construction management services for Higher Education. His construction management expertise includes: developed construction budgets for capital improvement projects, managed and developed project scope and end-user program requirements, generated construction documents and specifications for public bids, managed general contractors for mulit-million dollar new construction and renovation projects, developed CPM schedules to track construction progress, owner representative responsible for responding to requests for information, verified back-up information from contractor change orders, performed construction field inspections and generated daily reports, developed detailed punchlists and correction manifests, reviewed as-builts for accuracy and transferred them into CAD, managed construction budgets and close-out process.

Prior Experience

Before beginning his career in the energy efficiency / conservation, Mr. Jones managed new construction projects in Higher Education at South Puget Sound Community College.

- SPSCC Science Complex
- SPSCC Automotive & Welding Building
  - SPSCC Administrative Building

Resume of Marcus Eidal

Accreditation & Certification

- Nebb Tab Technician Certified 2003
- City of Seattle Fire & Life Safety Certification 2003

Experience

Mr. Eidal has commissioned ESCO projects at the City of Kent, the State of Washington Labor & Industries Building, Green River Community College, and Rainier School. Systems commissioned include VAV air handling systems, boilers, chillers, pumping systems, and reheat systems.

Prior Experience

Prior to joining Ameresco Quantum, Mr. Eidal's career included:

- National Indoor Air Care (NIAC): Test & Balance engineer. Prepared deficiency reports, punch lists, and tab agendas to forward onto contractors and project managers. Conducted surveys of complete HVAC systems. Supervised technicians in the test and balance of air and hydronic systems
  - Macdonald-Miller: Field Engineering Foreman. Expedited communication between upper management and general personnel. Supervised team members in testing, tuning, and adjusting of equipment to obtain optimum operating performance. Identified HVAC problems, diagnosed cause, and followed up with corrective actions. Tested and balanced air and hydronic systems. Conducted safety meetings. Responsible for multiple crews

Resume of Fritz Feiten

Education & Training

- B.A. Politics (with honors), University of California at Santa Cruz

Experience:

Mr. Feiten is Manager, Business Development for Ameresco Quantum in Washington State and has over eight years of experience working with customers in the State and local government, higher education and K-12 school markets to develop energy savings performance contracts and solar power purchase agreements. Prior to joining Ameresco, Mr. Feiten was an Energy Services Account Executive at Honeywell. Before entering the energy services field, Mr. Feiten was VP, Sales and Marketing for Affinity Publishing, a leading alliance marketing firm in the software industry.

Energy Projects in which Mr. Feiten played a key role include:

- Bates Technical College
- Bellevue College
- Centralia School District
- City of Bellevue
- City of Longview
- Edmonds Community College
- Everett School District
- Grays Harbor College
- Issaquah School District
- Kelso School District
- Longview School District
- Mercer Island School District
- Napavine School District
- North Thurston School District
- Puyallup School District
- Renton School District
- Seattle Central Community College
- Skagit Valley College
- Sound Transit
- South Whidbey School District
- Tumwater School District 1
- Walla Walla School District
- Washington School for the Blind
- Wahkiakum School District
- Wenatchee School District
- Wenatchee Valley College
- Woodland School District

Resume of Jason Prall

Education & Training

- B.S., Manufacturing Engineering Technology , Western Washington University,
- Mechanical Engineering, Gonzaga University

Accreditation & Certification

- Certified Manufacturing Technologist (2004).

Experience

Mr. Prall has many years of experience analyzing existing HVAC, plumbing, and refrigeration designs to identify opportunities to implement energy saving strategies, performing building model simulation using eQUEST, Trace, and HAP, energy lifecycle cost analysis, and CAD modeling using BIM software. He has extensive experience with clients in K-12 schools, local government and higher education across the U.S. in in Washington State.

Prior Experience

Prior to joining Ameresco Quantum, Mr. Prall's career included:

- Hargis Engineers, Inc., Seattle, WA: Mechanical Design consultant
  - Boeing Commercial Airplanes, Everett, WA: Mechanical Engineer

Resume of Ron Haxton, PE

Education & Training

- M.S., Engineering Management: University of Idaho (in progress)
- B.S., Mechanical Engineering: University of Idaho (1994)
- Idaho State PE License 2000, #9778
- Various Direct Digital Control systems training (design engineering, project management etc)

Experience

Mr. Haxton has performed project management responsibilities on a wide range of Energy Savings Performance Contracts (ESPC) and Energy Management and Control Systems (EMCS) projects for various customers; including municipalities, higher education, K-12 schools, office buildings, critical environment and hospital facilities. He has directly performed or managed the execution of; energy audits, cost estimates, financial and technical engineering, installation, commissioning and measurement & verification for over $25 Million in guaranteed energy savings projects in four different northwest states. Mr. Haxton is adept at all aspects programing, designing, installing, commissioning, and servicing of Energy Management Systems. Mr. Haxton is familiar with a broad range of Energy Conservations solutions designed to improve the performance of; lighting systems, HVAC systems, control systems, water systems, steam systems, as well as, renewable energy solutions such as bio-mass boilers.

Select projects in which Mr. Haxton has played a key role include:

- Boise State University, Washington State University, Kellogg School District, University of Idaho, Council School District, Alaska Department of Corrections, King County Housing Authority Yamhill-Carlton School, Emmett School District, State of Idaho Capital Campus and dozens of other public sector projects across Alaska, Idaho, Oregon, and Washington.

Prior Experience:

- Mr. Haxton began his professional career as an engineering specialist for Landis & Gyr (currently Siemens, Inc.) and was gradually promoted to Group Operations Supervisor, Branch Construction Manager, District Energy Solutions Operations Manager and Branch Manager.

Resume of Shelly Pittman

Education & Training

- B.A. International Studies, Portland State University
- Continuing education in project management, marketing, sales, training, team-building

Experience:

An Account Executive for Ameresco Quantum's Spokane, WA office, Ms. Pittman has assisted customers in the K-12, Higher Education and Local & State Government markets across the state in establishing Energy Savings Performance Contracts. She is adept at assisting clients in successfully securing Energy & Operations Savings Grants and Utility Incentives.

Select projects in which Ms. Pittman played a key role include:

- City of Walla Walla
- College Place School District
- East Valley School District - Yakima
- Elma School District
- Franklin County
- Grays Harbor County
- Kittitas County
- Lake Quinault School District
- Liberty School District
- Okanogan County
- Okanogan School District
- Oroville School District
- Reardan School District
- Spokane County
- Wenatchee School District – Phases 2 & 3
- Wenatchee Valley College - Phase 2
- Department of Social & Health Services
- Department of Transportation

Prior Experience:
For the past seventeen years, Ms. Pittman has worked with businesses to round out and extend their capabilities and endeavors via her marketing and business development expertise. A diverse group of

- technology and energy-related companies have been served by Ms. Pittman including Lockheed Martin, Cascade Natural Gas Conservation Program, Energy Trust of Oregon, First Point Energy Services, Veris Industries and others.

Resume of Michael Pacella

Education & Training

- BS Renewable Energy Engineering, Oregon Institute of Technology, 2011
- MA Teaching, Western Oregon University, 2002
- BA English, Eastern Oregon University, 2001

Accreditation & Certification

- Certified Measurement and Verification Professional in Training (CMVP-IT)
- Engineer in Training (EIT)

Experience

Mr. Pacella has assisted in auditing facilities and calculating energy savings associated with energy conservation measures. He is proficient at collecting, processing, and analyzing utility data and has experience performing baseline adjustments. He has also developed a measurement and verification (M&V) process and written many M&V reports detailing over 56,000 MMBtu of savings.

Prior Experience

- Prior to joining the energy efficiency industry, Mr. Pacella was a teacher, primarily responsible for language arts courses. He mostly worked in public high schools in Oregon, but also taught in a native village in Alaska as well as a university in South Korea.

Resume for Baraka Poulin

Education & Training

- M.B.A., Georgia College and State University 2011
- B.S. Mechanical Engineering, Gonzaga University 2008

Accreditations and Licenses

- Engineer in Training Certificate, Passed Fundamentals of Engineering Exam
- Certified Energy Manager, AEE
- AEE 2012 Young Energy Professional of the Year Region V

Experience

Mr. Poulin has worked as a project mechanical engineer for both public and private institutions. He is adept at baseline monitoring, field testing and engineering calculations.

Prior Experience

Prior to joining Ameresco Quantum, Mr. Poulin was a mechanical engineer in Puget Sound Energy's commercial and industrial conservation program. He calculated energy savings and issued conservation grants for hundreds of projects including, HVAC, controls, lighting, refrigeration, and other mechanical upgrades.

- Shelton SD, WDOT , Pierce College, Snohomish SD, Port of Longview, Wenatchee Valley College, Central Kitsap SD, Olympic College

Appendix 3: Form 330

ARCHITECT - ENGINEER QUALIFICATIONS

PART I - CONTRACT-SPECIFIC QUALIFICATIONS

A. CONTRACT INFORMATION

1. TITLE AND LOCATION *(City and State):* Washington Department of Enterprise Services

2. PUBLIC NOTICE DATE: January 23, 2013

3. SOLICITATION OR PROJECT NUMBER: none

B. ARCHITECT-ENGINEER POINT OF CONTACT

4. NAME AND TITLE: Fritz Feiten

5. NAME OF FIRM: Ameresco, Inc.

6. TLEPHONE NUMBER: 206-523-5314

7. FAX NUMBER: 425-687-3173

8. E-MAIL ADDRESS: ffeiten@ameresco.com

C. PROPOSED TEAM

(Complete this section for the prime contractor and all key subcontractors.)

9a. PRIME (CHECK HERE): Yes

9a. JOINT-VENTURE PARTNER (CHECK HERE):

9a. SUBCONTRACTOR (CHECK HERE):

9a. FIRM NAME:

9a. IF BRANCH OFFICE CHECK HERE:

10a. ADDRESS

11a. ROLE IN THIS CONTRACT

9b. PRIME (CHECK HERE):

9b. JOINT-VENTURE PARTNER (CHECK HERE):

9b. SUBCONTRACTOR (CHECK HERE):

9b. FIRM NAME:

9b. IF BRANCH OFFICE CHECK HERE:

10b. ADDRESS

11b. ROLE IN THIS CONTRACT

10. PROFILE OF FIRM'S EXPERIENCE AND ANNUAL AVERAGE REVENUE FOR LAST 5 YEARS

a. Profile Code	b. Experience	c. Revenue Index
E07	**Energy services, renewable energy**	**10**

PROFESSIONAL SERVICES REVENUE INDEX NUMBER

1. Less than $100,000
2. $100,000 to less than $250,000
3. $250,000 to less than $500,00
4. $500,000 to less than $1 million
5. $1 million to less than $2 million
6. $2 million to less than $5 million
7. $5 million to less than $10 million
8. $10 million to less than $25 million
9. $25 million to less than $50 million
10. $50 million or greater

11. ANNUAL AVERAGE PROFESSIONAL SERVICES REVENUES OF FIRM FOR LAST 3 YEARS
(Insert revenue index number shown above)

11a. Federal Work: $106 million

11b. Non-Federal Work: $485 million

11c. Total Work: $591 million

12. AUTHORIZED REPRESENTATIVE. The foregoing is a statement of facts.

12a. SIGNATURE: M. J. O'Con

12b. DATE SIGNED: 2/20/13