Honeywell

Honeywell Building Solutions

STATEMENT OF QUALIFICATIONS
FOR
ESCO CONSULTANT SERVICES TO IDENTIFY, FINANCE, DESIGN AND INSTALL ENERGY AND UTILITY CONSERVATION MEASURES FOR THE STATE OF WASHINGTON GENERAL ADMINISTRATION

Project No. 2013-133
February 22, 2013

ENERGY & ENVIRONMENTAL SOLUTIONS

ESCO Summary Sheet

To:	Kathy Fyfe	From:	Mike Murphy
Phone:	N/A	Date:	2/21/2013
Address:	Department of Enterprise Services Engineering & Architectural Services Energy Program 1500 Jefferson PO Box 41012 Olympia, WA 98504-1012		
Re:	2013-133 WA GA ESCO Program Submittal, Honeywell		

Company Name:	Honeywell International, Inc. Honeywell Energy and Environmental Solutions
Address	2700 Richards Road, Ste. 102 Bellevue, WA 98005
Main Contact	Mike Murphy (425) 698-6129 michael.murphy@honeywell.com
UBI	601-040-967
State of Washington Contractor's License Number	CC HONEYII982JD expires: 4-30-2014 EC HONEYII985JB expires: 4-02-2014
Federal ID Number	22-2640650

Department of Labor and Industries
PO Box 44460
Olympia, WA 98504-4460

HONEYWELL INTERNATIONAL INC
PO BOX 524 MN10-131B
MINNEAPOLIS MN 55440

HONEYWELL INTERNATIONAL INC

Lic: EC HONEYII985JB
UBI: 601-040-967

Licensed as provided by Law as:
Electrical Contractor
(EC06) - LIMITED ENERGY
(EC6A) - HVAC/RFRG LTD ENERGY

Effective Date: 4/2/2002
Expiration Date: 4/2/2014

Department of Labor and Industries
PO Box 44450
Olympia, WA 98504-4450

HONEYWELL INTERNATIONAL INC
PO BOX 524
MN10-131B
MINNEAPOLIS MN 554400524

HONEYWELL INTERNATIONAL INC

Reg: CC HONEYII982JD
UBI: 601-040-967

Registered as provided by Law as:
Construction Contractor
(CC01) - GENERAL

Effective Date: 4/4/2002
Expiration Date: 4/30/2014

TABLE OF CONTENTS

EXPERIENCE	PAGES	1-16
1. Experience in auditing and identifying energy efficiency projects	Pages	1-2
2. Matrix of the range of energy and utility management services	Pages	3-6
3. Experience with measurement and verification (M&V) processes	Pages	6-7
4. Qualifications of staff and subconsultants assigned to team	Pages	7-9
5. ESCO's experience securing utility incentives	Pages	9-10
6. Description of the experience key staff have	Pages	11-14
7. Description of the ESCO's familiarity with the EPA's Energy Star Portfolio Manager	Pages	14
8. Discussion of problems experienced on projects	Pages	14-15
9. Makeup of a typical project team	Pages	15-16
MANAGEMENT APPROACH	PAGES	17-30
10. ESCO's organizational structure and management approach	Pages	17-20
11. ESCO's policies and procedures for managing and delivering committed work	Pages	21
12. ESCO's approach to marketing the DES Energy Program to potential client agencies	Pages	21
13. Minimum size project considered viable	Page	21
14. ESCO's approach to effectively communicate project information with the DES	Page	21-22
15. ESCO's approach to project development	Pages	22-23
16. Method for contracting the installation of measures	Page	23
17. ESCO's procedures for timely closeout of construction projects	Page	24
18. ESCO's procedures for timely submittal of required documentation	Page	24
19. ESCO's approach to mitigate risks	Page	24-27
20. ESCO's approach to sharing EPACT tax credits with client agencies	Page	28
21. ESCO's experience and approach to meeting public works requirements	Page	28
22. Minority and Women Owned Business (MWBE) enterprises	Page	28-29
23. ESCO's policies and procedures for recycling materials	Page	29
24. Management of hazardous materials	Page	30
COMPUTATION OF ENERGY BASELINE AND POST-INSTALLATION ENERGY USE	PAGES	31-34
25. Methodology used to calculate baseline energy use	Page	31-32
26. Potential scenarios where a modified baseline may be proposed	Page	32-33
27. ESCO's utilization of M&V processes in establishing the baseline	Page	33-34

SAVINGS AND EQUIPMENT PERFORMANCE GUARANTEES	PAGES 35-37
28. ESCO's project cost guarantee policies and procedures	Page 35
29. ESCO's energy savings guarantee policies and procedures	Page 35-36
30. ESCO's equipment performance guarantee policies procedures	Page 36-37
31. ESCO's warranty enforcement role and responsibility	Page 37
FINANCING ABILITY	PAGE 38-40
32. ESCO's project financing ability	Page 38-40

APPENDIX

1. Example energy audit with cost and pricing breakdown
2. Resumes of key personnel
3. SF 330

EXPERIENCE

For over 125 years, Honeywell has been recognized as a world leader in the building systems equipment, services and engineering solutions market.

Honeywell International provides materials, products, services and solutions across the globe, with over 132,000 employees in 100 countries and revenue greater than $38 Billion.

Nearly 50% of our product portfolio is linked to energy efficiency. We estimate the global economy could operate on 10-25% less energy just by using today's existing Honeywell technologies.

A general timeline of Honeywell can be illustrated as follows.

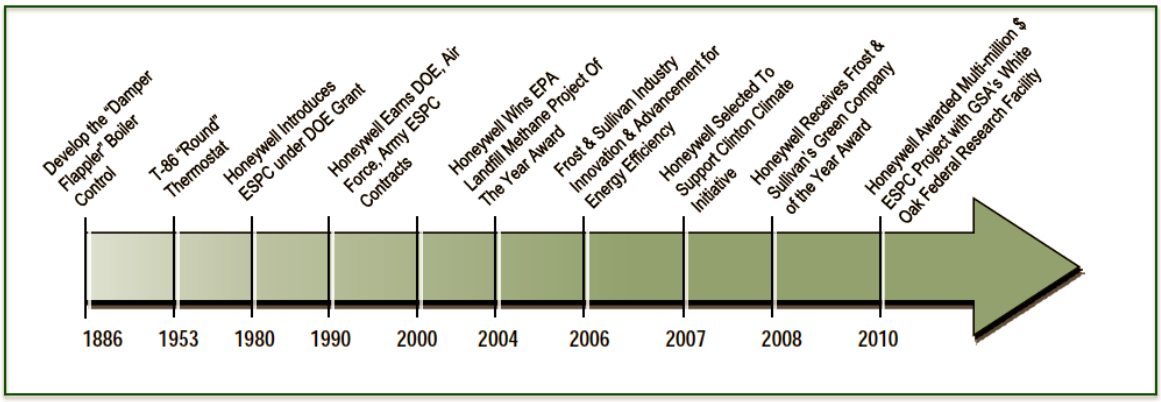

Beyond the numbers, we have the professional staff, resources and financial strength to continue to be a great partner for the State of Washington.

1. The ESCO's experience in auditing and identifying energy efficiency projects. Provide a list of all energy performance contracting projects completed in the past two years (if the ESCO has completed more than 15 projects within Washington State in the past 2 years, the ESCO may list just the Washington State projects, in either case the list should be no longer than the most recent 30 projects), including contract value, client contact and client phone number.

Honeywell has been in the energy control and efficiency related business for over 120 years, beginning with the invention of the electric thermostat through the Butz Thermo-Electric Regulator Company in 1885. With the award of our very first Energy Services Contract in 1979, Honeywell pioneered and revolutionized the performance contracting business, coining the concept of "guaranteed savings" under a U.S. Department of Energy grant in 1984.

To date, we have executed well over 5,000 Energy Savings Performance Contracts (ESPC) representing a combined total value of approximately $5 billion. We currently maintain an estimated $130.0 million in guarantees for Federal, state and local governments, K-12 schools, higher education, medical facilities, general office buildings, retail/commercial enterprises, and industrial facilities.

In the last two years, our performance contract experience Nationally can be summarized as follows:

Year	# of Projects	$ Value - Performance-Based Contracts Only
2012	84	$377.1 M
2011	106	$297.0 M

Per the State's request, we are pleased to provide the following list of representative projects performed in the West as a sampling of our experience.

Project Name	Location	Reference	Project Dollar Amount	Project Type
Scottsdale USD ESPC	AZ	David Peterson 480-484-6183	$2.3 M	ESPC project
City of Antioch Phase 1	CA	Ron Bernal 925-779-6820	$4.7 M	Street lighting retrofit
National City Public Works Phase 1	CA	Ron Morrison 619-336-4236	$1.7 M	ESPC and street lighting retrofit
Pueblo County School District #70 Phase 1	CO	Monte Montez 719-295-6543	$2.8 M	ESPC project
Chino Valley USD #51	AZ	Duane Noggle 928-636-2458	$597,000	ESPC project
East Grand USD	CO	John Weninger 970-887-2521	$1.4 M	ESPC project
Yuma County/City of Wray	CO	Stan Holmes 970-332-4432	$838,000	ESPC project
National City Public Works Phase 2	CA	Ron Morrison 619-336-4236	$970,000	ESPC project
Snohomish School District Phase 1	WA	Ralph Rohwer 360-563-3532	$828,000	ESPC project
Pueblo County School District #70 Phase 2	CO	Monte Montez 719-295-6543	$3.1 M	ESPC project
El Paso County ARRA Project	CO	George Diestelkamp 719-520-6575	$2.9 M	ESPC project
Snohomish School District - Phase 2	WA	Ralph Rohwer 360-563-3532	$568,000	ESPC project
City of Walla Walla Ph I	WA	Hal Thomas 509-527-4463	$315,000	Street lighting retrofit
City of Walla Walla Ph 2	WA	Hal Thomas 509-527-4463	$315,000	Street lighting retrofit
Scottsdale USD	AZ	David Peterson 480-484-6183	$750,000	Solar chiller
County of Alameda	CA	Bill Lepere 510-670-5431	$4.5 M	Street lighting retrofit
City of Phoenix	AZ	Neil Mann 602-262-4820	$2.3 M	ESPC project
Lamar Community College	CO	Sean Lirley 719-336-1543	$3.1 M	ESPC project
Merced Community College	CA	Rick Souhrada 209-384-6135	$3.1 M	ESPC project

2. Provide a matrix of the range of energy and utility management services provided by the ESCO, including the ESCO's capability to provide the following services: energy auditing, financing, design, general contracting, construction management/administration, testing and balancing, commissioning, warranty services, measurement and verification of savings, energy savings guarantees and facilitating utility participation to maximize utility rebates and incentives.

On our ESPC projects we act as the General Contractor (Performance Contractor), providing our clients with a single point-of-contact throughout the life of the program. We typically utilize our own employees to perform the energy survey, design specification and development of the technical solutions, financial and contract support, project management, and measurement and verification tasks. We have, on staff, professionals trained and skilled in fire, security, energy management systems, and temperature control/HVAC systems, mechanical and electrical systems and a variety of other trades.

Activity	Honeywell	Subcontractor
Project Development and Financing (if needed)	X	X
Engineering Analysis and Design	X	X
Project and Construction Management	X	
Low Voltage EMCS/Fire/Security Integration and Upgrades	X	X
Water System Upgrades (Xeriscape)	X	X
Electrical and Lighting Upgrades	X	X
HVAC and Mechanical Upgrades	X	X
Architectural, Insulation and Windows Upgrades		X
Maintenance of Installed Equipment	X	X
Monitoring/Verification Guarantee	X	
Training of Operations and Facilities Staff	X	X
Financial Responsibility for Energy Guarantees	X	

If a retrofit requires a Professional Engineering services, Honeywell will contract with a state registered local engineering/architectural firm to provide this service; with this in mind, if an engineering stamp is required, we would likely contract the services of the following individual, licensed in the State of Washington:

Jeff Nichols, PE, CEM, CPMP, LEED® AP
Engineering Economics, Incorporated
1201 Western Avenue, Suite 325
Seattle, Washington 98101
T: 206.622.1001
C: 206.920.1746
F: 206.622.5747
www.eeiengineers.com

Energy Auditing

Honeywell has extensive energy engineering expertise and has audited, analyzed, modeled, and developed creative energy saving strategies for hundreds of buildings of various types and their central plants. Honeywell has a wealth of in-house talent backed by years of experience, outstanding education credentials and industry certifications. Our experience enables us to furnish an expert analysis to optimize the best energy design for any situation.

Complementing our team of engineering and technical professionals are other team members forming the foundation behind Honeywell's design-build expertise. Honeywell excels at integrating the art of engineering with the practical implementation of large and complex projects.

We have on-staff estimators that are skilled in all areas of construction estimating with particular expertise in large scale energy infrastructure and central plant facilities. Our cost estimators have education credentials which include engineering and architecture and extensive contracting backgrounds.

Honeywell employs a highly collaborative process between engineering, cost estimating, construction, and financing partners throughout a project.

Financing

Honeywell has its own financial arrangement company, Honeywell Global Finance (HGF). HGF has helped our clients finance many large, complex energy-efficiency and central plant projects across the United States. HGF is able to work with our customers to help identify and implement the best financing plan for any retrofit or new plant development work.

Design

Our design approach strives to minimize energy consumption while maintaining the necessary levels of energy dependent services. Our strategy is to not merely replace existing equipment with more efficient equipment, but to determine facility needs and interactions, and then develop the most appropriate solution. Included in this phase is the provision of detailed design and documentation of approved EEMs. A project development plan will be prepared that provides the site management approach, an organizational chart, the description and functions of key members of the project team, a detailed project schedule, and the elements of cost control. This plan will also outline procedures for identifying, selecting and monitoring qualified subcontractors. Supporting the recommendations will be detailed engineering and financial analysis, including capital and maintenance costs, energy savings, simple payback terms, applicable incentives and rebates, and other potential funding sources. Additionally, the report will include a measure-specific monitoring and verification plan, project implementation schedule, and operations, maintenance and training approach.

General Contracting

Honeywell will be the general contractor on all State of Washington General Administration (WA GA) ESPC projects. Honeywell is synonymous with construction, providing a full-spectrum of commercial, industrial and government remodeling and general contracting services. Our continued success is based upon our use of materials from pre-qualified manufacturers as well as an expert staff licensed and trained in multiple disciplines.During the pre-construction phase of all projects, we collect input from our entire team (sales, engineering, and operations) to develop a detailed project schedule. In this general contractor role, we take responsibility for the entire project including all trades that are involved.

Our project management team will inspect the work of all subcontractors for compliance with design documents and EEM intent and will develop specific project acceptance criteria including startup, and retro-commissioning processes. Our Project managers will work closely with our engineering team on final design, specification, and procurement of equipment utilizing our own in-house supply management following established good business practices.

Our construction strategy will provide for fast payback items with short construction timelines to be installed first so that the Agency will begin to realize savings as early in the project as possible. We focus on scheduling work in a manner that minimizes disruption while maintaining a safe environment.

We believe by integrating health, safety and environmental considerations into all aspects of our business, we protect our people and the environment, achieve sustainable growth and accelerated productivity, drive compliance with all applicable regulations and develop the technologies that expand the sustainable capacity of our world. Our health, safety and environment management systems reflect our values and help us meet our business objectives.

Construction Management/Administration

The Honeywell project and construction management team is comprised of individuals from engineering, construction, and/or contracting backgrounds, with many years experience in the execution of large, complex energy retrofit projects. Supporting the project and construction managers during a project are the project scheduler and cost estimators.

Honeywell maintains a variety of tools such as Microsoft Project scheduling software that is utilized to monitor project progress and resource allocation. The cost estimating function directly supports the project and construction managers throughout the project and is responsible for project cost development, supporting the bid process and subcontract negotiations, and change order review. Cost estimating draws upon industry standard costing databases, custom databases based on Honeywell's nationally negotiated pricing with major equipment manufacturers, local labor standards, and others. Throughout execution of a project through audit and through construction completion, the project and construction managers have the ability to draw upon a wide variety of internal resources available within Honeywell including accounting, legal, administrative, commodity, financial and other specialized professionals.

Testing and Balancing

All air/hydronic testing, balancing and building commissioning is done in accordance with National Environmental Balancing Bureau (NEBB) guidelines. Building systems commissioning practices also incorporate the guidelines and principals set forth by the Building Commissioning Association (BCA). Qualified Honeywell site personnel perform or supervise all TAB work. Final TAB performance data is recorded onto appropriate forms where it is compared to the designed performance criteria given. Pre-functional Testing, as part of the Commissioning Process, involves primarily the test and balance and equipment startup personnel to ensure that individual pieces of equipment are capable of performing in accordance with the Specifications, Drawings and manufacturers' requirements. This is documented with a pre-functional checklist provided and completed by Honeywell.

Commissioning

Honeywell develops an overall commissioning plan for each project that will identify the key sequence of events, measurements, and processes necessary to commission the total EEMs delivered on the project. Key to this plan is identifying the coordination activities that must occur between the agency, Honeywell, and its subcontractors to ensure the EEMs deliver the savings in accordance with the proposed M&V methodology and plan. In developing the commissioning plan, Honeywell will identify and review with the agency all operational, performance, and schedule risks and develop appropriate mitigation measures to ensure the project objectives are achieved.

Warranty Services

Honeywell warrants that equipment and materials shall be of good quality and shall be free from defects in materials and workmanship, including installation and setup, for a period of one (1) year from the date of completion of the equipment installation and the acceptance of beneficial use by the owner. Warranty service is generally provided during normal business hours, although we can make it available 24 hours-a-day 365 days-a-year for a fixed fee or on a pre-determined overtime premium differential rate service for desired systems or equipment.

In some cases, warranties are available beyond the standard 1-year period. In all cases, we will transfer these to the owner after the expiration of the initial 1-year warranty period. Examples of extended warranties include:

- Lighting Equipment: Ballasts – 5 years
- Lamps – 2 years
- Mechanical Equipment: Refrigeration Compressors – 5 years
- Heat Exchangers – 15 years

Warranty service during the initial one-year warranty period will be handled and coordinated through Honeywell. All calls will go to our 24-hour service center and appropriate factory trained technicians from Honeywell, our subcontractor or the equipment manufacturer will be sent to the site.

As an additional option, WA GA clients can accept the provision of a maintained level of onsite lighting material bench stock in lieu of a full labor and material warranty on lighting lamps and ballasts. This allows the client's on-site staff to quickly replace any failed devices and avoid the inconvenience of having to wait for a warranty call-out to get this done.

Measurement and Verification of Savings

The Honeywell M&V team includes 39 employees consisting of M&V engineers, analysts, and monitoring and verification technicians. This team is fully conversant in the key global M&V guidelines, specifically the Federal Energy Management Program (FEMP) and the International Performance Measurement and Verification Protocol (IPMVP).

Energy Savings Guarantees

Honeywell is one of the most financially sound ESCOs in the world. We currently pay out on shortfalls for approximately 2% of our total savings guarantee dollars annually, which means that Honeywell stands behind its commitments and actually pays out if there is a shortfall.

We intend to secure our guarantee to the WA GA and its clients through our longevity, financial strength, and proven track record of meeting commitments.

Facilitating Utility Participation to Maximize Utility Rebates and Incentives

We are experienced at identifying and obtaining available energy efficiency incentives for our clients. We coordinate with the owner or his/her designee in the preparation of any and all documentation required to apply for applicable financial incentives, pursuing all grants, incentives and rebates available.

In the last seven years Honeywell has facilitated the following rebates and incentives for projects in the State of Washington:

Project	Year	Incentive	Utility	Program Name
City of Walla Walla Ph. I	2006	$ 57,945	PacifiCorp	Energy FinAnswer
Snohomish School District - Phase 1	2010	$111,815	Snohomish PUD	Incentive and Technical Assistance Program
Snohomish School District - Phase 2	2011	$28,380	Snohomish PUD	Incentive and Technical Assistance Program
City of Walla Walla Ph. II	2011	$156,503	Pacific Power + ARRA	FinAnswer + ARRA EECBG

3. The ESCO's experience with measurement and verification (M&V) processes. The ESCO should describe its familiarity with M&V protocols and when each is most appropriately applied.

Measurement and Verification (M&V) is a detailed analysis of energy consumption at a facility and the cost of the energy consumed. The Measurement and Verification process measures energy savings performance against baseline year performance. This provides for an ongoing assessment of the effectiveness of Honeywell's implemented EEMs.

An energy analyst will be assigned to each project, and will perform ongoing measurement of energy savings utilizing one or both of Honeywell approved methods: the METRIX software program and/or EEM Measurement and Verification. The energy analyst will also be responsible for ensuring that the auditing methodologies and applicable data gathering equipment are maintained for each specific EEM.

Honeywell's procedures for baseline establishment, post-installation and regular interval verification inspections ensure that the State and its clients receive the performance and savings for which they have contracted. The Honeywell M&V plan will identify the methodology to be used to capture and quantify the changes in the project performance and operational parameters to be measured. The values of the performance and operational parameters are needed to calculate energy savings associated with project's implementation.

Honeywell uses industry standard guidelines for measurement and verification (M&V) as defined by the International Performance Measurement and Verification Protocol (IPMVP) originally developed by the Department of Energy (DOE). Your expectations and project specifics dictate which protocol will be the most reasonable and cost-effective way to provide verifiable results. Through discussions conducted with the client during the energy audit, Honeywell will prepare

and submit a site-specific M&V plan that best suits their needs, and establish risks to be assumed by Honeywell. Both measured specific guarantees and stipulated savings may be used, if chosen as an option by the client.

An overview of the four options is provided below:

"Option A" is a verification approach that is designed for projects in which the potential to perform needs to be verified, but the actual performance can be stipulated based on the results of the "potential to perform and generate savings" verification and engineering calculations.

"Option B" is for projects in which the potential to perform and generate savings needs to be verified; and actual performance during the term of the contract needs to be measured (verified). Option B involves procedures for verifying the same items as Option A plus verifying actual achieved energy savings during the term of the contract. Performance verification techniques involve engineering calculations with metering and monitoring.

"Option C" is also for projects in which the potential to perform needs to be verified and actual performance during the term of the contract needs to be verified. Option C involves procedures for verifying the same items as Option A plus verifying actual achieved energy savings during the term of the contract. Performance verification techniques involve utility whole building meter analysis and/or computer simulation calibrated with utility billing data.

"Option D" is a verification technique where calibrated simulations of the baseline energy use and/or calibrated simulations of the post-installation energy consumption are used to measure savings from the energy conservation measures. Option D can involve measurements of energy use both before and after the retrofit for specific equipment or energy end use as needed to calibrate the simulation program. Periodic inspections of the equipment may also be warranted. Energy consumption is calculated by developing calibrated hourly simulation models of whole-building energy use, or equipment sub-systems in the baseline mode and in the post-installation mode and comparing the simulated annual differences for either an average year or for conditions that correspond to the specific year during either the baseline or post-installation period.

4. The ESCO's experience designing, costing and managing the construction of heating plants (including steam), chilled water plants, heating ventilation and air conditioning systems, heat recovery, energy management and control systems, lighting and lighting control systems, water efficiency, and other utility system improvements including renewable.

Honeywell's approach to projects is comprehensive and customer-oriented. Our entire focus is on helping our customers meet their energy reduction and capital facilities renewal needs through paid-from-savings energy conservation projects. Our solutions are directed by the individual facility's needs and objectives, and are structured to achieve the desired blend between increased cash flow and investments in new equipment.

We utilize over 300 energy conservation measures, continuously updating and adding to this list as new technologies are developed. Each of these measures is assessed and either selected or dismissed on a case-by-case basis, according to the value they present to the specific customer. We have expertise in a wide range of systems and technologies, and can offer a broad range of services to the WA GA. We have the in-house capability to identify, audit, build and provide performance guarantees for all of the potential technologies and strategies that may be applicable, including:

<u>Heating systems</u>
Projects performed range from simple forced air systems to complex heating plants. We have capabilities for most all air and hydronic HVAC heating systems, as well as process heating applications.

<u>Air Conditioning systems</u>
Our cooling system expertise ranges from the application of direct expansion to complex cooling plants and dual-fuel, dual effect water chillers. We have designed and installed a broad range of HVAC and process cooling systems.

Control and building automation systems

As a major manufacturer of temperature control and building automation systems and products, we have extensive knowledge and expertise in this area. However, it should be noted that we are vendor-neutral with respect to the selection and application of these products on our projects.

Ventilation systems

We assess ventilation requirements and compliance with ventilation standards and, where appropriate, offer and deliver integrated and energy efficient solutions for these systems.

Indoor air quality

As referenced above, assessment, design and implementations of comprehensive ventilation improvements is central to all of our projects. All work performed will meet appropriate codes and standards and, where appropriate, improve IAQ in the process.

Lighting systems: indoor and outdoor

Lighting measures we have performed include conversion from incandescent to fluorescent lamps, energy efficient ballast technology, conversion from high bay sodium fixtures to HID, traffic light LEDs, and parking lot HIDs

Water-consuming systems

We often replace or retrofit inefficient water-consuming plumbing fixtures such as toilets, urinals and faucet aerators with new lower-flow fixtures, devices and controls. We also automate irrigation systems and use advanced water filtration systems to allow for recycled use of sewer streams for gray water applications, such as outside irrigation.

Renewable or alternative energy

We have demonstrated experience in the application of PV power generation, solar (thermal) heating and hot water systems, cogeneration power plants and wind turbine based power generation. We have also designed and installed several bio-mass-to-energy projects and forest bio-mass gasification systems.

Other areas of technical expertise

- Central Plants – Re-commissioning, retrofit/upgrade and replacement of individual facility and central heating and cooling plants.
- Distributed Generation – The application and use of standby and continuous duty electrical generators for peak load shaving, base loading and emergency operations.
- Kitchens – Conversion of electric cooking appliances to natural gas; Waste heat recovery from kitchen exhaust systems; Ventilation optimization.
- Laundry Facilities – Conversion from electric to natural gas for dryers; Make-up air optimization;
- Pools – Humidity control; Pressurization control; Conversion from chlorine to ozone based water treatment; Waste heat recovery
- Fuel Switching – Real time switching of fuel sources on heating and process boilers; Use of steam absorption vs. electric centrifugal chillers to avoid peak demand charges; Dual-fuel, dual effect chillers

Project installations are designed in accordance with the specific requirements identified by the individual client. The building owner's standards of service, if provided, or those provided by the State of Washington Department of General Administration become the basis for acceptable temperature and humidity ranges, air quality parameters, lighting levels, and other performance related factors. However if standards are not specified, we traditionally utilize recognized standards including but not limited to: the National Electric Code, National Fire Protection Association, ASHRAE, Illuminating Engineering Society of North America, Air Conditioning and Refrigeration Institute, Occupational Safety and Heath Administration, and other design and construction standards required by State and local codes.

The vast majority of Honeywell's Energy Savings Performance Contracts (ESPCs) involve designing, costing and managing the implementation of the energy conservation measures, as illustrated below.

	Client Name						
EEM Type	Snohomish School District Ph 1&2	City of Wray	City of Rifle	Lamar Community College	City of Antioch	National City	City of Perris
Boiler Improvements		✓		✓		✓	
Chiller Improvements				✓		✓	
Building Automation/Energy Management and Control Systems	✓	✓		✓			✓
Heating, Ventilating, and Air Conditioning	✓	✓		✓		✓	✓
Indoor lighting improvements	✓	✓		✓	✓	✓	✓
Building Envelope Modifications		✓		✓			
Electric Motors and Drives				✓			
Distributed Generation/ Cogeneration Systems							✓
Renewable Energy Systems		✓				✓	✓
Energy/Utility AMR/AMI			✓	✓			
Water Conservation							
Traffic and Street lighting					✓		
Rate Reduction and Auditing Services					✓		
Proposal Development, Energy Surveys/Studies		✓	✓	✓	✓	✓	✓
Training/Miscellaneous	✓	✓	✓	✓	✓	✓	✓

5. The ESCO's experience securing utility incentives for its customers. Discuss successful strategies implemented for maximizing utility incentives.

The implementation of an ESPC often results in a client being eligible for financial incentives, including rebates and grants, from the serving utility company, local, state or Federal government, or other entities.

We are experienced at identifying and obtaining available energy efficiency incentives for our clients. We coordinate with the owner or his/her designee in the preparation of any and all documentation required to apply for applicable financial incentives, pursuing all grants, incentives and rebates available. Our expert staff members develop creative partnerships that go beyond traditional rebate applications, rewarding our customers with solutions that likewise go well beyond their typical funding expectations.

The Honeywell Energy and Environmental Services West team has negotiated the following rebates and incentives on behalf of our clients in the last five years alone:

Project	State	Year	Incentive	Utility	Program Name
City of Perris - ER	CA	2007	$4,916		SCE Lighting program rebate
County of Solano	CA	2007	$2,288,787	PG&E	CSI Self-Generation Incentive Program
City of Hillsboro	OR	2007	$220,750	PGE	Energy Trust of Oregon
City of Pendleton WTP	OR	2007	$200,000	Pacific Power	Energy Trust of Oregon
Lewis and Clark College	OR	2007	$225,000	PGE	Energy Trust of Oregon
Wilson School	AZ	2008	$248,081	APS	APS Solar Partners
Dixon High School	CA	2008	$1,730,352	PG&E	CSI Self-Generation Incentive Program
Riverdale School District Ph 1	CA	2008	$929,805	PG&E	CSI Self-Generation Incentive Program
Riverdale School District Ph 2	CA	2008	$358,968	PG&E	CSI Self-Generation Incentive Program
The Wine Group	CA	2008	$3,427,954	PG&E	CSI Self-Generation Incentive Program
County of Teton	CO	2008	$73,066	Lower Valley Energy	Deemed and Custom rebates
City of Pendleton WWTP	OR	2008	$200,000	Pacific Power	Energy Trust of Oregon
Mt. Hood Community College	OR	2008	$225,000	PGE	Energy Trust of Oregon
Scottsdale School District	AZ	2009	$117,899	AZ Public Service	Solutions for Business
City of Antoich	CA	2009	$160,000	PG&E	Non Residential Rebate (NRR) Program
National City Public Works - Phase 1	CA	2010	$40,592	SDG&E	Energy Efficiency Business Rebates
Pueblo County School District #70 - Phase 1	CO	2010	$267,633	Black Hills Energy	Colorado Electric Commercial Rebate Program
Chino Valley USD #51	AZ	2010	$72,948	APS	Solutions for Business
Snohomish School District - Phase 1	WA	2010	$111,815	Snohomish PUD	Incentive and Technical Assistance Program
Pueblo County School District #70 - Phase 2	CO	2010	$49,811	Black Hills Energy	Colorado Electric Commercial Rebate Program
El Paso County ARRA Project	CO	2010	$1,937,700	ARRA	ARRA EECBG
Snohomish School District - Phase 2	WA	2011	$28,380	Snohomish PUD	Incentive and Technical Assistance Program
City of Walla Walla - Street Lights	WA	2011	$156,503	Pacific Power + ARRA	FinAnswer + ARRA EECBG

6. A description of the experience key staff have, who are responsible for administration of any potential work awarded thru this project. This is to include any sub-consultants routinely used for execution of performance contracting work. This is not to be the resumes or curriculum vitaes (CVs) of personnel. Resumes or CVs may be attached as an appendix. Please indicate if the experience was obtained at other than this ESCO. Please identify the responsible licensed P.E.

Once a specific project is identified by Honeywell and the WA GA, it is staffed according to location, size, and project management availability at the time of project development and subcontractor selection. With this in mind, key Honeywell team members who would likely be involved in the development of projects for Washington State GA clients include, but are not limited to the following:

Michael Murphy Account Executive	♦ 22 years experience with Building Solutions ♦ AS, HVAC mechanical and control system design, South Seattle Community College Mike has experience with the sale and installation of DDC Controls, Security and Fire Alarm system architecture, sequence design, implementation, and system integration. He has worked in various positions over time from Service Technician to Account Manager.
Chris Whelihan Project Manager	♦ 19 years experience in Project Management. ♦ BS in Industrial Technology – Construction Management emphasis, University of Wisconsin - Stout Chris has experience in the direct supervision of construction projects and installations, specifically mechanical and control systems.
Fred Miller Project Manager, Install	♦ 20 years experience in Building Solutions Fred has extensive experience in the installation and service of integrated building solutions, including HVAC, fire and security.
Mary Wyand, P.E., CEM Solutions Development Engineer	♦ 27 years experience in Energy Services Industry ♦ BS in Mechanical Engineering, Arizona State University ♦ P.E., California Mary is responsible for providing energy engineering, project development, design engineering and estimating services for ER projects, as well as assisting in the production of financial packages and management of pre-installation subcontractors.
Kevin Cross, P.E., CEM Solutions Development Engineer	♦ 16 years experience in Energy Services Industry ♦ M.S. Mechanical Engineering, University of Wisconsin ♦ P.E., Colorado ♦ LEED 2.0 Accredited Professional Kevin is responsible for providing energy engineering, project development, design engineering and estimating services for ER projects, as well as performing technical analysis and assisting in the production of financial packages and management of pre-installation subcontractors.

Justin Rundle, P.E., CEM Solutions Development Engineer	♦ 25 years experience in Energy Services Industry ♦ MBA and MS, University of Iowa ♦ BS in Mechanical Engineering, Iowa State University ♦ P.E., Arizona, New Mexico, Texas, Michigan, Kentucky (renewing/lapsed) ♦ Certified Energy Manager (CEM) Justin has extensive project management and design and operations experience, having worked on water and wastewater treatment, industrial and automotive plants for fifteen years, with a specialization in water / wastewater energy savings projects and solutions.
Shoko Imamura Solutions Development Engineer	♦ 4 years experience in Energy Services Industry ♦ BS in Chemical Engineering, University of Utah ♦ EIT certification, Utah Shoko has experience in energy and financial analysis, measurement and verification, and renewable energy R&D.
Amy Cho Energy Auditor	♦ 13 years experience in energy auditing ♦ BS in Chemical Engineering, University of Utah ♦ EIT certification, Utah ♦ Shoko has experience in energy and financial analysis, measurement and verification, and renewable energy R&D.
Terry Johnson Engineering Estimator	♦ 31 years experience in Building Solutions ♦ Associates Degree, Anchorage Community College Terry has experience in the development and execution of Integrated Building Technologies and Performance-based solutions in the Western United States.
Aamer Athar Measurement and Verification (M&V) Leader Honeywell International	♦ 20 years experience in Energy Services Industry ♦ MBA in Global Energy Management, University of Houston ♦ MS in Mechanical Engineering, Texas A&M ♦ PE, States of Texas and Arkansas ♦ Certified Carbon Reduction Manager (CRM) Aamer Athar is responsible for the overall management of M&V Specialists and M&V Commissioning Analysts. He is responsible for the overall leadership of the guaranteed cost avoidance M&V activities and provides process development leadership relative to savings boundary determination, baseline development, normalization parameters, baseline adjustments, quality assurance of verification activities and review of risk allocation, as well as review of M&V plans and management of resources.
Robert Newkirk Contract Manager	♦ 22 years experience in contract management ♦ Juris Doctorate, University of Chicago ♦ BS degree in Accountancy and Economics, University of Illinois – Urbana Champaign ♦ Licensed Attorney, State of Illinois Bob is Senior Contracts Manager for Honeywell Building Solutions, responsible for writing, reviewing and negotiating all Energy Performance Contracts in the West region. He provides leadership and legal and process expertise for contracting and risk management, as well as support for overall project management.

Complete project resumes for key project team members referenced above can be found in Appendix 2.

Honeywell typically performs the Energy Survey, Design Specification, Financial and Contract, Project Management, and Monitoring and Verification tasks of our energy projects in-house, relying on the services of outside consultants and subcontractors to provide such services as professional engineering design and certification and construction of energy and facility related improvements. A State licensed professional engineering firm may be hired to supplement these capabilities and to assist with the permitting and certification efforts. We also engage subcontractors where expertise on a proprietary system or specialized EEM is desired or required.

Activity	Honeywell	Subcontractor
Project Development and Financing (if needed)	X	X
Engineering Analysis and Design	X	X
Project and Construction Management	X	
Low Voltage EMCS/Fire/Security Integration and Upgrades	X	X
Water System Upgrades (Xeriscape)	X	X
Electrical and Lighting Upgrades	X	X
HVAC and Mechanical Upgrades	X	X
Architectural, Insulation and Windows Upgrades		X
Maintenance of Installed Equipment	X	X
Monitoring/Verification Guarantee	X	
Training of Operations and Facilities Staff	X	X
Financial Responsibility for Energy Guarantees	X	

Our selection of outside team members is based on several factors: the specific areas of expertise offered by the firm or its individual members, our past experience in working with them, their designation, if applicable, as a W/M/DBE, and input from you, the customer. *The inclusion of any and all subcontracting partners is subject to the approval of the State of Washington GA, and the individual customer.*

In all our projects, we first look to keep work local. Our first step is to search our database of approved contractors who have passed stringent qualification criteria to provide service to our customers; some of these criteria include financial strength, bonding capacity, and levels of insurance. In some cases, smaller firms cannot meet all of these requirements; however, if they are a quality service provider and their inclusion on the project is desired, we have historically been able to include these firms under other subcontractors and been able to subcontract to them specific work scopes that do not exceed their capabilities.

Honeywell International and, more specifically, Honeywell Energy and Environmental Solutions recognizes that Small Businesses (SB), HUBZone Small Businesses (HUBSB), Small Disadvantaged Businesses (SDB), Woman-Owned Small Businesses (WOSB), Veteran-Owned Small Businesses (VOSB) and Service-Disabled Veteran-Owned Small Businesses (SDVOSB) are essential contributors to our social and economic community. We are committed to procuring goods and services from these business types whenever possible, and have developed a formal Commercial Subcontract Plan to maximize our opportunities to do so. It is the policy and intent of Honeywell to fully honor and implement the requirements of the laws governing contracts into which we enter.

During the Subcontracting Phase, Honeywell will review the availability and capability of local contractors. To do this, we consult our extensive database of subcontractors with previous experience on Honeywell projects, your requests and experience with local subcontractors, and State and Federal databases of local Subcontractors; one such database is the Small Business Administration Firm Listing.

We believe in the power of partnerships, and prefer whenever possible to work with local contractors with whom the WA GA or individual customer has had favorable experience. We work closely with contractors to ensure that the quality

standards established jointly by Honeywell and the customer are met or exceeded, further reinforcing one of the primary benefits of the Performance Contracting Approach- single point of contact.

Honeywell is dedicated to providing the highest quality services and products possible. All engineering and design work is reviewed and approved internally through estimate review and risk review processes to ensure consistent, high quality performance.

7. A description of the ESCO's familiarity with EPA's Energy Star Portfolio Manager and other benchmarking tools.

Honeywell has been proactive in promoting Energy Star® Certifications for its customers for many years. Energy Star® Certification is a program administered by the US Environmental Protection Agency (EPA) that evaluates buildings on the basis of their Energy Use Intensity. The EPA evaluates this through the Portfolio Manager – software that determines the Energy Use Intensity (EUI) and benchmarks the results.

Through the use of Energy Star's Portfolio Manager, facilities can be evaluated for energy efficiency and ranked among buildings falling within the same class. Taking into consideration factors like square footage, occupancy, number of computers, and other relevant assessment data, Energy Star's Portfolio Manager ranks a building, campus, or group of buildings on a rating system of 1-100. Buildings achieving a score greater than 75 are awarded Silver status by the EPA, and awarded a recognition certificate and plaque to the end user; this encourages customers to promote energy efficiency and reduce Greenhouse Gas emissions as well as develop a better carbon footprint.

Honeywell has several in-house staff members well versed in Portfolio Manager Software, and has helped many customers receive Energy Star® recognition over the last 10+ years.

When commencing a project, data collected from a client or facility's utilities will be used to populate the EPA Energy Star Portfolio Manager. Honeywell would organize the data, populate, manage, and provide training for owner and user agencies' employees, for ongoing management.

Clients for whom Honeywell has facilitated Energy Star recognition include the following:

- Rochester, NY
- Allen School
- Chamberlain School
- Nancy Loud School
- Gonic School
- Maple Street School
- McClelland School
- Middle School
- New East Rochester School
- School Street School
- Spaulding High School
- Richard W. Creteau Regional Technology Center
- Biddeford, ME
- Biddeford, ME Schools
- Biddeford Primary Schools
- Biddeford John F. Kennedy School
- Danbury, CT
- Danbury City Hall
- Danbury High School
- Morris Street Elementary School

We will work with the WA GA and its clients to prepare documentation for Energy Star Status and other applications and certifications as requested. We are on numerous Boards and Business Development Organizations to further improve the energy status of buildings, and are currently a voting member in the US Green Building Council, supporting its goals and developing LEED certified projects which have sustainable energy improvements.

8. A discussion of problems experienced on projects and the remedy for those problems.

Problems can occur at any point in the development and implementation of a performance contract. If a problem does exist, it is usually uncovered during the implementation or guarantee phases.

Our typical procedure for identifying problems includes the activities of our personnel in inspecting and monitoring the performance of equipment, parts, components and personnel. Our experience in all phases of energy management work

enables us to identify potential problems before they happen. We also carefully inspect all project components before they are installed in your facilities. We consider our approach to managing your project a "hands-on" approach. This hands-on attention is required of all project team members, including management personnel.

Schedule Problems

Our team will prevent schedule slippages by continuously tracking the location of all equipment and components required for the project. We make sure all equipment and components will be delivered on time, prior to the scheduled date of installation. Our thorough survey, evaluation and analysis of existing conditions, performed prior to the commencement of construction, will also prevent schedule slippages.

The Honeywell team will constantly monitor the work task duration of all construction workers, to facilitate hourly or daily task adjustments, as needed, to maintain the project schedule. In the event scheduling problems or delays in implementation occur, we will adjust timing and manpower allocations, as needed, to ensure ultimate project success and complete customer satisfaction.

A critical path schedule will be utilized. The critical path work tasks will be tracked and adjusted manually and by computer as the need arises in the event of scheduling problems or delays in implementation.

Maintenance Problems

The impact of retrofits installed under a performance-based energy services program is that they will improve operations and maintenance of the buildings in which they are installed. The new, higher technology equipment will reduce maintenance levels while lowering energy costs. However, preventative maintenance is still required to maintain the performance of the installed equipment. Our local branch personnel can provide the preventative and full service coverage as required. Although utilizing Honeywell's maintenance services is not a requirement, this further insures accountability for ongoing program operational results and customer satisfaction to avoid unnecessary downtime or disruption of services.

Savings Guarantee Problems

During the performance period or measurement and verification (M&V) term of our projects, problems can arise regarding the savings guarantee. Honeywell always attempts to proactively impact the process before problems develop. The M&V efforts include monitoring of monthly bills to ensure the guarantee is tracking toward the expected results. Working closely with client facilities and management personnel, we review and correct unexpected changes to ensure the financial returns are on target. On an annual basis or as determined by the contract, the M&V Specialist, along with the account manager, will deliver the report, which provides a significant amount of detail on how the project performed.

Should the guarantee be missed, Honeywell will take steps to compensate the client per the terms of the final contract and remedy the problem for future years. Although we stand ready to financially support missed energy guarantees, we will enlist the help of our solutions development engineers, M&V Specialists, and outside consultants as required, to remedy the missed guarantee.

9. What is the makeup of a typical project team with regards to local (WA, ID, OR) vs outside the region staffing.

Honeywell Energy and Environmental Solutions is staffed with well over 550 experienced personnel, and includes registered Professional Engineers (PEs), Certified Energy Managers (CEMs), Leadership in Energy and Environmental Design (LEED®) Accredited Professionals, project managers and technical professionals, all of which have a range of experience that enables us to address all aspects of energy services projects with the most up-to-date knowledge of technologies, design and equipment.

Our national Energy and Environmental Solutions team has the following personnel available to support State of Washington GA projects:

- 73 Licensed Professional Engineers
- 104 Project Managers
- 124 Solutions Development Engineers
- 75 Certified Energy Managers
- 43 Measurement & Verification Specialists
- 96 LEED Certified Professionals
- 18 Contract Specialists

Our personnel are distributed throughout the country into regional and local support networks. This includes our local teams in Bellevue, Spokane, and Vancouver, Washington as well as a core of engineering professionals located throughout the Western United States. These teams of professionals will be dedicated to the development and execution of any State of Washington projects.

For most projects, our typical team will consist of a Project Administration Team, including a Solutions Development Engineer or Energy Auditor, a Project Manager (PM), and a Measurement and Verification (M&V) Specialist. The Project Administrative team will manage all tasks associated with the scope development and utility rebate management on behalf of the client agency.

Once a specific project is identified, it will be staffed according to several distinct factors including the location, size, and complexity (examples: renewable energy, water and wastewater solutions) of the project, all determined during project development.

MANAGEMENT APPROACH

10. The ESCO's organizational structure and management approach to the project. Clearly describe the roles and responsibilities of typical ESCO staff who will be assigned to any project obtained under this selection and of any sub-consultants included on the ESCO's team. For sub-consultants, describe the ESCO's prior experience working with the sub-consultant.

Honeywell's approach to managing projects is comprehensive, and customer-oriented. Our entire focus is on helping our customers meet their energy reduction and capital facilities renewal needs through paid-from-savings energy conservation projects. Honeywell's entire project will be directed by the individual facility's needs and objectives, and will be structured to achieve the desired blend between increased cash flow and investments in new equipment.

Customers of the WA GA program will benefit from the approach that Honeywell has developed in the execution of multiple performance contracts throughout the United States. The WA GA and its clients will be treated as partners in all areas of projects, from the evaluation and selection of energy efficiency measures (EEMs) through their implementation; to reviewing and approving the designs; to approving equipment and contractors; and to final acceptance of completed work. Honeywell's management approach is customer-focused to meet the individual needs of their clients while paying attention to the details, schedule and overall cost control.

Our management approach is based on five important tenets:

- Lessons learned from a proven record of managing complex, multi-subcontractor, multi-vendor contracts;
- Procedures developed during a long, successful history in implementing and verifying large scale energy saving programs;
- A proven set of procedures and tools for controlling and managing costs, schedules, and overall performance;
- A quality assurance program to guarantee that the work performed in the design, development, implementation and operation of each EEM is of the highest quality; and
- A system of interfaces that assures owner involvement in the decision making process.

Honeywell will assign a full-time Project Manager (PM) to oversee and be responsible for every aspect of the job. He will have direct, day-to-day contact with and reporting responsibilities to the WA GA and client project manager(s). In addition, the Honeywell PM will be responsible for scheduling all activities with the facility and modifying schedules to adapt to changes in facilities usage. He will draw from Honeywell's extensive past experience with developing work schedules that accommodate the specific needs of each facility. This means not only preventing disruptions to the client's operations and activities, but also maintaining good lighting, air temperature, air quality, and noise levels.

Each phase of Honeywell's work will be submitted to and approved by the client. This begins with the investment grade energy audit and proposed EEMs, and continues through the client's adoption of a financial structure for the project, approval of designs and major equipment, approval of work schedules, acceptance of the completed EEMs and acceptance of measurement and verification of the savings.

Honeywell's proposed approach can be summarized as a systematic evaluation of the facility, followed by the development of a comprehensive energy master plan, which, after approval from the client, is fully implemented with Honeywell taking on the majority of the project risks. Honeywell incorporates a three-phase process for the implementation and operation of the performance contracting program. This process, which has proven successful in the execution of multiple programs throughout the United States, is outlined on the chart found on the following page.

Honeywell Implementation and Deployment Process	
Phase	**Component**
Project Development and Energy Master Plan Phase	▪ Investment Grade Audit ▪ Savings Measurement & Verification Plan ▪ Independent Third Party Review ▪ M&V Pre-implementation Measurements ▪ Conceptual Design ▪ Cost Estimating ▪ Financial Analysis and EEM Recommendations ▪ Workshop to Finalize EEM Selection ▪ Present Final Investment Grade Audit ▪ Arrange Long-term Project Financing
Performance Contract Implementation Phase	▪ Engineering and Design ▪ Construction Management ▪ EEM Installation ▪ Commissioning ▪ Owner Training ▪ Construction Close-out ▪ M&V Post Installation Measurements ▪ Energy Education Program *(optional)*
On-going Monitoring, Operation & Maintenance Phase	▪ Energy Savings Measurement & Verification ▪ Energy Savings Guarantee ▪ Equipment Operation & Maintenance *(optional)* ▪ Continuous System Optimization *(optional)* ▪ On-site Energy/Project Manager *(optional)*

On WA GA projects the following typical roles and responsibilities, as well as the individuals who would likely be filling them, can be illustrated as follows.

ESPC Program Manager

Michael Murphy, Account Executive: Michael (Mike) Murphy will serve as the point of contact for the WA GA, establishing and documenting customer expectations, business goals and challenges and facilities needs, goals and challenges. Mike will be responsible for the development and negotiation of the contract with the State and client, and will help monitor the project as a "voice of the customer" through the performance period to ensure that your expectations are met. He is also responsible for interaction and program compliance with utilities, the State or any other parties involved.

Project Manager

Chris Whelihan, Project Manager: Chris Whelihan will engage with the client as the project begins, and will have project team leadership responsibility all the way through the completion to the warranty period. He will assist in the development of bid documents, bid solicitation, and selection of the subcontractors and suppliers, will have responsibility for executing the work according to the bid documents, and will provide day-to-day oversight of the subcontractors. Chris will oversee and approve all testing, measurement and verification and administration of sub-contracts. He will also perform quality control inspections, and ensure that all work performed is accurately reflected in the "as-built" documents.

Local Installation Project Manager
Fred Miller, Project Manager: Fred Miller will have project team leadership on the installation of Honeywell products, if applicable, including control systems and HVAC. He will support the efforts of Chris Whelihan as appropriate.

Lead Project Engineer
Mary Wyand, PE.,, Solutions Development Engineer: Mary Wyand will lead the project development effort for WA GA projects, including assessment of existing systems, modeling of energy and operational characteristics, energy savings calculations and engineering development of energy conservation, renewable energy, facility improvement and water/wastewater process enhancements. Mary will work closely with the client and the WA GA, as well as other Honeywell staff, to ensure that retrofit scope meets the needs of the client, provides true synergies with your long term infrastructure plans, complies will all applicable codes and standards and provides the most optimal life-cycle operating cost profile for your projects.

Mary will also work closely with M&V Specialist Aamer Athar to develop your savings and performance measurement and verification protocols based on the improvements selected by the client for implementation. She will also provide engineering support to Project Manager Chris Whelihan during the construction phase; typical activities for Mary during this time will include submittal review for specification compliance and other as-needed meeting participation and field inspections.

Project Engineering
Kevin Cross, PE, Justin Rundle, PE, and Shoko Imamura, Solutions Development Engineers: Kevin, Justin and Shoko will support Mary in the project development efforts for State of Washington projects. This includes assessment of existing systems, modeling of energy and operational characteristics, energy savings calculations and engineering development of energy conservation, renewable energy, facility improvement and water/wastewater process enhancements.

Kevin, Justin and Shoko will work closely with Mary and the Project Manager to develop savings and performance measurement and verification protocols based on the improvements selected by the client and the State, with Shoko providing local support.

Local Energy Auditing
Amy Cho, CEM, Energy Auditor: Amy Cho will support the Solutions Development Engineering team in the development of projects under the WA GA program. This includes assessment of existing systems, modeling of energy and operational characteristics, energy savings calculations, securing utility incentives and engineering development of energy conservation, renewable energy, facility improvement and water/wastewater process enhancements.

Contracts Negotiation
Robert Newkirk, Senior Contract Manager: Robert (Bob) Newkirk will be responsible for writing, reviewing and negotiating Energy Performance Contracts under the WA GA program. He will provide leadership and legal and process expertise for contracting and risk management, as well as support for overall project management.

Measurement and Verification
Aamer Athar, Measurement and Verification Specialist Leader: Aamer will be responsible for development of the monitoring and verification plans based on the final EEMs proposed for each project and client. As a project progresses, Aamer will continue to be involved with M&V plan execution and on-going activities over the life of the measurement term. This work includes verifying that installed equipment meets the energy saving specifications and is installed and started in accordance with the project energy savings plan.

An organization chart can be found on the following page.

Washington State Department of General Administration

Participating Washington State Programs

Project Development Phase

Michael Murphy - Account Executive
Single Point of Customer Contact during Project Development

Bob Newkirk – Contract Manager
Contract Negotiation

Aamer Athar, PE, CRM – M&V Lead
Collect Utility Bills – Develop Energy Baseline
EPA Portfolio Manager Applications

Engineering Team

Mary Wyand, PE, LEED AP
Solutions Development Engineer (SDE)

Kevin Cross, PE, LEED AP
SDE

Justin Rundle, PE, LEED AP
SDE

Shoko Imamura
SDE

Amy Cho, CEM
Energy Analyst

Responsibilities

- Site Surveys
- Work With Project Management
- Baseline Energy Use Development
- Facilities Operations Analysis
- Savings Calculations
- Modeling
- Develop M&V Plan
- Scope Evaluation and Selection
- Develop IGA Report
- Utility Rebates/Grants Development
- Develop Project Financing Options
- Engineering Design
- Carbon/Renewable Energy Credits
- Bid Specifications
- Work with Project Management
- Equipment Specification
- Team on Solution Development
- Submittals and Customer Approvals
- Subcontractor Selection, Schedule

Delivery Team

Chris Whelihan
Regional Project Manager

Fred Miller
Installation Project Manager

Responsibilities

- Manage Construction Phase
- Single Point of Customer Contact in Construction Phase
- Equipment Ordering
- Subcontract Procurement
- Coordinate/Manage Project Schedule
- Project Commissioning
- Liaison with M&V Team
- Develop O&M Manuals
- Customer Acceptance

Performance Period
M&V, Training & Support Services

Aamer Athar, PE, CRM – M&V Services Lead
Monitor Energy Savings Performance
Collect Monthly Utility Bills / Track Monthly Performance
Develop Annual Savings Audit
Performance Data to Web Tool
Upload Monthly Utility Data
EPA Portfolio Manager Tracking

John Lees – Field Service Leader
Single Point of Contact for Support Service Work

Chris Valentine – District General Manager
Oversees the activities of the District

Honeywell Technicians:
Matt Bagne, Bill Cornehl, Bob Woodworth, Michael Young, Steve Kuhlman, Patrick Shute

Responsibilities

- Project M&V
- Training
- Energy Awareness / Education
- Measurement & Reporting Goals / Accomplishments
- 24-Hour Emergency Service
- Preventive Maintenance
- Ongoing Performance Improvement Planning
- Executive Sponsorship / Management

11. The ESCO's policies and procedures for managing and delivering its committed work products in a timely fashion within contractual obligations, including project development, construction, and post implementation verification.

Upon selection by the client and the WA GA to develop a Detailed Investment Grade Audit (DIGA) Proposal, we will create a document that addresses the scope of work, audit price and project development schedule.

The DIGA scope of work will address the measures to be investigated during the DIGA with allowance for early abandonment of measures that are discovered to not meet the financial criteria established by the client, while the audit price will include the direct costs associated with any 3rd party technical support in addition to the ESCO cost for energy engineering, auditing, cost estimating and project management oversight.

A detailed MS Project development schedule will incorporate the timelines from 3rd party technical support and time allowances for client-supplied data gathering, field audit work, analysis and report generation, cost estimating and project management tasks, and for the client and the WA GA to review the draft DIGA and provide feedback to Honeywell for incorporation into the final DIGA submittal along with the Energy Services Proposal with final pricing.

Upon agreement and acceptance of the DIGA Proposal, Honeywell will work the plan to maintain a timely audit and update the project development schedule on a bi-weekly basis or as deemed necessary. Regular correspondence with the WA GA and the client will ensure the schedule is being met.

12. The ESCO's approach to marketing the DES Energy Program to potential client agencies in conjunction with DES personnel.

Honeywell has been presenting the services of the General Administration Energy Program to all our eligible clients as part of our standard first call presentation. In this presentation, we emphasize to them the benefits of using the GA Energy Program, among them the streamlined procurement process and assignment of an Energy Project Manager.

13. What is the minimum size project your firm would consider viable.

Honeywell has installed projects ranging from the low $100K's to in excess of $200-million, though we do not generally observe any set minimums or maximums. The decision to pursue or not a potential project is more often predicated on a variety of other factors, including but not limited to: EEMs available or desired by the customer, payback periods, and financing available.

14. The ESCO's approach to effectively communicate project information with the DES Energy Program prior to sharing with client agency.

During initial discussions with clients and potential municipal clients in the State of Washington about any potential ESPC projects, it is our intent to immediately notify an owner during our first client call about our relationship with the WA DES. We will recommend that they contact the WA DES at their earliest convenience and discretion to solicit your involvement and support.

At a minimum, we will suggest to owners that it would be beneficial for them to share our preliminary assessment (pre-RFP or energy audit) information with the WA DES to begin to get you engaged in the process.

Once the Interagency Agreement has been countersigned, Honeywell will hold a kick-off meeting at the beginning of the development phase with the client agency and DES. Honeywell will make sure to engage the DES Project Manager throughout, in a series of meetings which drive the project, starting with the establishing the scope of the audit and customer requirements.

Honeywell will establish a communication protocol during the kick off meeting to address these items:

- Establish project leads and discuss responsibilities for customer, Honeywell.
- Establish frequency and methods of communications - Conference Calls, Workshops.
- Define executive leadership role and responsibilities.

The Energy Services Proposal (ESP) will be delivered for review to the DES Project Manager prior to the client agency to ensure all appropriate categories are addressed pertaining to the Master Energy Services Agreement.

We welcome the involvement of the WA DES during the construction and performance phases of all of our State of Washington projects.

15. The ESCO's approach to project development from marketing to delivering the ESP.

We employ a nine-step project development process that includes a series of workshops to ensure thorough understanding and collaborative efforts for the client, Honeywell and the WA GA throughout.

The nine-step audit process includes:

1. Education & interviews with key owner stakeholders
2. Identification of the owner's project related needs, goals and expectations. In order to do this, it is important that we gather meaningful data from all of the decision makers and key influencers; make the goals clear, achievable and measurable, including specific financial, technical and operational goals that must be met for the project to be considered a success; and confirm alignment and buy-in.
3. Conducting energy consumption and cost inventory as part of baseline development and benchmarking actual against similar facilities and/or processes. This typically includes some form of normalization to make the comparisons meaningful and relevant.
4. Developing detailed inventory in the following areas
   a. Energy consuming mechanical and electrical equipment and systems
   b. Any unique research, manufacturing or production processes
   c. Current use/needs vs. methods of operation
   d. Assessment of operations and maintenance procedures
   e. Cost of operations/maintenance/repairs
5. Conducting walk-through audits to determine if real-time data collection appropriate (using data loggers, etc.) and document visual observations
6. Doing an end-use energy and water/wastewater analysis for each building, special building subsystem and/or campus.
7. Developing preliminary scope, cost and savings model(s)
   a. Potential scope items, including first cost, energy savings, O&M impact & on-going cost(s)
   b. Provide recommendations for operations and maintenance procedures
   c. Develop and use an interactive financial ("shopping list") model
8. Reviewing the information with appropriate decision makers and stakeholders & fine tuning accordingly.
9. Preparation of the final audit deliverable document, and presentation in a workshop to the appropriate decision makers and stakeholders. Develop alignment around subsequent activities.

The workshop process includes several different topics that may be combined into a fewer number of sessions than those listed below:

1. Preliminary project scope review and selection based on budget cost and savings
2. Final project scope review and selection based on guaranteed maximum or fixed cost pricing and guaranteed savings figures
3. Measurement and verification protocols and plan for selected improvements
4. Training needs assessment and plan
5. Construction plan review

6. O&M and service plan
7. Financing
8. Audit deliverable

We will leave it to the discretion of the WA GA and each client as to the level of their involvement and meeting attendance that they deem appropriate on each project and associated event.

16. The method for contracting the installation of the measures, maintaining cost competitive pricing, and whether the ESCO uses open book pricing.

In most energy retrofits, we utilize our own staff, engaging sub-consultants/contractors for specialty work; this would include but is not limited to: lighting retrofits, water conservation projects, chilled water, hot water and steam distribution systems, refrigeration systems, energy and utility distribution systems (transformer installations, gas distribution systems), and boiler plant improvements. Our project staff and sub-consultants have the knowledge, expertise, and equipment to identify not only opportunities, but to determine proper equipment selection and installation cost details for a successful project. This same team is later engaged to assist in the performance of pre- and post-installation measurements for energy consumption and operational hours, as well as a detailed cost breakdown itemized into tasks, associated hours, material costs and labor costs for each task. We require our subcontractors to show labor hours and costs by category and material and equipment costs down to the component level.

We seek competitive bids for major equipment purchases and HVAC system improvements, such as packaged air condition unit replacements, cooling towers, economizer installations, and fan and pump replacements; building envelope modifications, electric motor and drive installations, distributed generation and renewable energy systems are also competitively bid, with two or more quotes attesting to the best available pricing.

Fees are based on work performed. Most customers choose a fixed-price contract to reduce their risk and provide a project cost "ceiling," while others prefer an open book pricing or cost-plus pricing method. Regardless, we are able and willing to employ either of these methods based on the customer's requirement.

Firm, Fixed-Price Method

The firm, fixed-price method guarantees the final project price to the customer, with the only exception to this guarantee occurring when both the customer and Honeywell agree upon a change of scope. Customer feedback has shown us that most Performance Contracting customers prefer the firm, fixed-price method to mitigate their purchase risk and ensure their program is fully funded through savings.

All of our fees are included in the turnkey price, dependent on final scope, project schedule and customer-specific requirements. Our fees are very competitive and comparable to the RS Means costs for general contractors, while our large bonding capacity and subcontractor leverage allows us to provide excellent turnkey pricing compared to the competition.

Open Book Pricing Method

Our experience with the federal government Super ESPC program and years of commercial energy savings projects have resulted in a complete, standardized cost-estimating methodology. Our estimating method breaks out the major portions of a project, itemizing each cost for easy determination of the total price. Honeywell routinely shares its labor and equipment estimates, as well as major subcontractors quotes and pricing details, and provides equipment from a wide variety of manufacturers without bias for or against one brand or manufacturer over another; ultimately, it is the client's choice and decision.

We determine the cost of a project using a bottom-up method to identify all items directly attributable to the project. These costs typically include materials, labor, equipment and subcontracting work, plus other directly related items such as quality control, project support, bonding, permits, etc. These costs are subtotaled and then multiplied by the project mark-up percentage to obtain the total price for the project.

17. The ESCO's procedures for timely closeout of construction projects delivery of O&M manuals, commissioning reports and other pertinent paperwork to the DES Energy Program and the client agency.

To ensure timely closeout of construction projects, closeout documentation is written into the scope required of each and every subcontractor; each subcontractor is responsible for the documents/manuals related to their scope as written into Honeywell's contract with the customer.

A project schedule is generated at the very beginning of the project, which is managed and maintained over the course of construction/installation, including the dates for close-out and all required close-out documentation. Regularly scheduled progress meeting are held with the customer and subcontractors; at each meeting the schedule is discussed, monitored and adjusted as deemed necessary by the project team.

Once the project is a month to a month and a half out from the date of close-out, progress meetings become focused on addressing the requirements for not only a timely, commissioning and close-out of the project but also making sure all the documents and manuals that are required to meet our contractual obligations with the customer are in order. Depending on whether or not it is requested or required by the customer, draft samples of the close-out documents and O&M manuals may be submitted for review and approval with and by the customer a week in advance of the actual turn-over meeting, which in essence is the close-out of the project.

Finally, an official turn-over meeting is held (which is reflected in the overall construction schedule) between Honeywell Installation, Honeywell M&V, any key subcontractors and the customer, which closes out the project for installation and turns over all operations to the M&V Team. At this time, all close-out documents, O&M manuals and any other required deliverables are submitted to the customer; commissioning reports and documents are included in these close-out documents.

18. The ESCO's procedures for timely submittal of required documentation to Departments of Revenue, Employment Security, and Labor and Industries.

Upon notice to proceed on a project or contract, Honeywell will first hold a construction kick-off meeting. During this meeting, we will discuss what state requirements are applicable to each component of the project, including any and all tax, retainage, and invoicing and approval requirements, as well as security requirements for employees working on site and any other requirements of local and state government agencies. The Honeywell project manager will hold weekly progress meetings to review these items, and make sure that all the required documents can and will be prepared and submitted on time.

19. The ESCO's approach to mitigate risks associated with guaranteed cost, savings, and performance.

Honeywell understands the inherent risks associated with energy performance contracting. For high risks, the project team will consider ways of reducing the impact or likelihood and prepare contingency plans. For those risks that are considered to almost certainly have a high impact, the process, product or delivery mechanism should be deleted, in order to terminate the risk. Risks of this nature identified at the beginning of a project should be designed out at this stage. For high impact risks that have a small chance of occurring, the risks may be accepted, but with close monitoring and detailed contingency plans in place.

Given all of the above, residual risk will still flow through the project, accumulating as the project progresses. The many risks would be superseded by successful management of the process, product, quality, time or costs, with those involved informed as part of the risk management process.

Risks, once identified and categorized, will be logged into a risk register database for easy interrogation and availability to the project team. This is to ensure that identified risks are captured, and not lost, to enable effective management of each risk. New risks that are identified throughout the project by risk assessment methods are entered into the risk register as they become recognized. Risks that have been superseded by subsequent activities are left in the register, but identified as 'dead'. Using a computer analogy, they would become 'grayed out' to indicate that no action is required.

The risk register will include (as a minimum):

- A unique identifier for each risk
- An unambiguous description of the risk
- The date when the risk was raised
- The probability of occurrence
- The severity of impact
- The risk category
- The risk control measure(s) and recovery strategies with trigger points, where appropriate
- The time frame during which the risk is present
- Who is responsible for the risk control measure/s
- Superior and subordinate risks which may affect or be affected by each specific risk
- Date of review, agreed actions and results

The risk register may include other aspects appropriate to the organization or project such as:

- Program impact
- Contract life impact
- Related items/tasks/processes

The key message, as noted above, is that each risk will be managed by an identified and responsible person, and that regular reviews will be carried out to ensure that appropriate risk control actions are in place. The review mechanism will help to spread 'best practices' and improve competency within the project team, as well as facilitate the identification of aspects suitable for publishing to a wider audience within the organization and its support teams (sub-contractors, consultants etc).

Below you will find a sample EPC Risk Register:

Risk Responsibility/Description	Honeywell Proposed Mitigation
FINANCIAL	
Interest Rates: Neither Honeywell nor the client have significant control over prevailing interest rates. During all phases of the project, interest rates will change with market conditions. Higher interest rates will increase project cost, financing/project term, or both. The timing of the Contract/Delivery Order signing may impact the available interest rate and project cost.	Honeywell locks into the finance rate prior to the Implementation award. If the award is anticipated shortly after submission of the investment grade proposal, the rate will be "final". If there is a significant time lag between submission of the final proposal and award of the Delivery Order, Honeywell reserves the right to update the rate prior to award.

Risk Responsibility/Description	Honeywell Proposed Mitigation
Energy Prices: Neither Honeywell nor the client have significant control over actual energy prices. For calculating savings, the value of the saved energy may either be constant, change at a fixed inflation rate, or float with market conditions. If the value changes with the market, falling energy prices place the Contractor at risk of failing to meet cost savings guarantees. If energy prices rise, there is a small risk to the client that energy saving goals might not be met while the financial goals are. If the value of saved energy is fixed (either constant or escalated), the client risks making payments in excess of actual energy cost savings.	Honeywell will not be directly involved in energy purchasing and, therefore, will not be in control of the client's price negotiations. However, our expertise in reducing electrical load will enable energy profiles to become more favorable for lower tariffs.
Construction Costs: Honeywell is responsible for determining construction costs and defining a budget. In a fixed-price design/build Contract, the client assumes little responsibility for cost overruns. However, if construction estimates are significantly greater than originally assumed, the Contractor may find that the project or measure is no longer viable and drop it before Contract award.	Honeywell, will within the bounds of the contract, ensures that projects are delivered to cost. As such, the client can be assured that there will be "no sudden surprises" during the contract management. All new equipment will be installed in accordance with the manufacturer's recommendations and applicable codes for structural, mechanical, and ventilation. Equipment will be designed and installed to the appropriate EU standards.
Measurement & Verification (M&V) Costs: The client assumes the financial responsibility for M&V costs directly or through the Contractor. If the client wishes to reduce M&V cost, it may do so by accepting less rigorous M&V activities, which could result in more uncertainty in the savings estimates.	Honeywell will include an M&V plan, which clearly identifies the performance or operational parameters that will be measured on a continuous, periodic, or annual basis to verify EEM (Energy Efficiency Measures) performance. Our M&V Plan will follow the International Performance Measurement and Verification Protocols (IPMVP) and we will recommend the best of the four options depending on the individual EEM. During the investment grade proposal process, Honeywell will meet with the appropriate customer personnel to discuss the EEM to be included in the project and the recommended M&V plan for each. Honeywell will review each M&V plan with the customer to agree the best and most cost effective way to substantiate EEM performance.
Delays: Failure to implement a viable project in a timely manner may cost the customer in the form of lost savings, also can add cost to the project (e.g. construction interest, re-mobilization).	Honeywell will develop a schedule based on the specific situation of each project. It is in Honeywell's and the subcontractor's best interest to finish the project ahead of schedule because the construction financing costs can erode profits. If delays are caused by the client, others or Force Majeure events, Honeywell will submit a change order for the increased construction costs.
Major Changes in Facility: The applicable agency controls major changes in facility use, including closure.	A contract modification under such circumstances might be required. The contract shall require adjustments either upward or downward to the measurement and verification and/or the guaranteed savings based on the change or alteration.

Risk Responsibility/Description	Honeywell Proposed Mitigation
OPERATIONAL	
Operating Hours: The client generally has control over its operating hours. Changes in operating hours can be revealed as increases or decreases in "savings" depending on the M&V method (e.g., operating hours multiplied by improved efficiency of equipment vs. whole building/utility bill analysis). If the operating hours are stipulated, the baseline should be carefully documented and agreed to by both parties.	Operating hours for building occupancy will be established during the development phases through interviewing the building occupants/managers, data logging, calculations, etc. The hours of operation will be provided in our calculations as part of our investment grade proposal and will be stipulated as part of the savings baseline.
Load: Equipment loads can change over time. The client generally has control over hours of operation, conditioned floor area, intensity of use (e.g. changes in occupancy or level of automation). Changes in load can show up as increases or decreases in "savings" depending on the M & V method. If the equipment loads are stipulated, the baseline should be carefully documented and agreed to by both parties.	The equipment loads will be measured during the investment grade proposal and the results will be presented in each proposal. As part of the Implementation Plan, all new equipment will be commissioned, measured and verified to confirm the new load as part of the post-construction M&V plan.
Weather: A number of energy-efficiency measures are affected by weather. Neither Honeywell nor the client has control over the weather. Changes in weather can increase or decrease "savings" depending on the M&V method (e.g. equipment run hours multiplied by efficiency improvement vs. whole building/utility bill analysis). If weather is "normalized," actual savings could be less than payments for a given year.	In nearly all instances, our experience has shown that any reduced savings are normally recovered in later years thus the net effect is positive. Honeywell will use published Degree Day data to ensure that energy consumption accurately reflects the affects of warmer/cooler days. The published data will be used at the anniversary of the contract start to show the effects of differing temperatures. The actual consumption can then be adjusted and compared against the agreed kWh benchmarks associated differential kWh.
User Participation: Many energy conservation measures require user participation to generate savings (e.g., control settings). The savings can be variable and Honeywell may be unwilling to invest in these measures.	The critical control strategies that produce the energy savings for the projects are parameters that can be measured and easily understood by the building operators. Honeywell will train the operators after the installation of new BMS components so they operate the HVAC systems as contracted. Honeywell will request that the customer provide reports from the BMS as evidence that the HVAC systems are being operated and maintained, in accordance with the terms of the contract.
Asbestos: Health risks to staff.	The client will be asked to have an up-to-date asbestos register for all sites. Should areas be found that have been previously unidentified, Honeywell would initiate a pre-project asbestos survey to mitigate any health risks.

20. The ESCO's approach to sharing EPACT tax credits with client agencies.

As EPCACT tax credit opportunities arise, Honeywell will work with State agencies to determine if a split of the tax credits is possible.

21. The ESCO's experience and approach to meeting the public works requirements for apprenticeship training programs as directed by Chapter 39.04.320 RCW.

If the construction cost portion of a project exceeds $1,000,000, Honeywell is required to comply with apprenticeship requirements pursuant to RCW 39.04.320.

For self-performed work, Honeywell's four-year apprenticeship program combines on-the-job training and paid employment with formal technical training. Employees have the opportunity to pursue a long-term career in the innovative and diversified industry of automation and controls.

The apprenticeship program allows projects and service technicians to gain 'hands on' experience, and work towards becoming fully qualified Service Technicians. Honeywell Service Technicians are leaders in their field, and are responsible for the ongoing service, maintenance and upgrades of automation systems, as well as mechanical areas, such as chillers and plant room equipment. Apprentices will be trained in a diverse range of systems, working across a range of facilities including manufacturing plants, refineries, hospitals, shopping centers, casinos, correctional facilities, office buildings, museums, airports, and train stations.

We pride ourselves on the level of quality we deliver to our customers, and are continually looking for apprentices to continue this longstanding tradition of delivering advanced technology solutions together with great customer service.

For subcontracted work, Honeywell will flow-down these requirements to all contractors selected for bid packages.

22. How Minority and Women Owned Business (MWBE) enterprises will be utilized on the project.

Honeywell has a robust procurement process for the inclusion of Minority and Women Owned Businesses (MWBE) subcontractors and suppliers as part of our contracts and projects. MWBE participation on our Honeywell Building Solutions (HBS) – Energy and Environmental Solutions (EES) projects typically exceeds 30%, dependant on the scope of work and the availability of qualified MWBE suppliers. We recognize that MWBE companies are essential contributors to our social and economic community, and are committed to procuring goods and services from these businesses whenever possible.

We endeavor to exceed stated goals for MWBE and HUB involvement in all projects, even in situations where no goals are established. As part of our bid review process, we seek to maximize the use of MWBE businesses for all subcontracted work. We identify the scope of work available, consult our extensive database of subcontractors, and then invite qualified MWBE businesses to participate in site walk-throughs and design reviews in preparation for the bid process.

In order to facilitate involvement in our projects, Honeywell typically provides MWBE firms the following assistance:

- Assist with solicitation activities by arranging the proposal response time, quantities, specifications and delivery schedules to facilitate their participation as fair, reasonable and appropriate.
- Where a significant list of eligible companies is available, a reasonable effort will be made to provide an opportunity to those entities to compete over a period of time.
- Provide adequate and timely consideration of sources in all make-or-buy decisions.
- Counsel and discuss subcontracting opportunities with representatives of eligible firms.

Honeywell's Automation and Control Solutions (ACS), the Division under which HBS and EES reports, maintains a Commercial Subcontracting Plan. The Plan outlines our goals for diverse spend, types of supplies and services to be subcontracted, method to develop our goals, method to develop potential suppliers as well as various other responsibilities under the plan.

Below is the diverse spend that was reported to the federal government for 2010 for ACS (Honeywell Building Solutions is a division of ACS):

Small Business Concerns:	$564,330,261 (34%)
Large Business Concerns:	$1,096,480,509 (66%)
Total:	$1,660,810,770

Small Disadvantaged Business Concerns:	$243,901,571	(14.7%)
Women-Owned Small Business Concerns:	$50,208,571	(3%)
HUBZone Small Business Concerns:	$8,580,951	(.5%)
Veteran-Owned Small Business Concerns:	$11,146,043	(.7%)
Service-Disabled Veteran-Owned Small Business Concerns:	$905,331	(.1%)

23. The ESCO's policies and procedures for recycling materials such as lamps, ballasts, fixtures, ceiling tiles, and other recyclable material.

Honeywell is fully committed to an integrated and holistic approach to energy efficiency retrofits. Honeywell has the experienced personnel to enable our customers in the State of Washington to comply with the goals of sustainable development during new construction and existing building retrofits.

Our project manager is experienced in sustainable "green building" practices in performing existing building retrofits. During the project-planning phase, the project manager will work with the Agency to perform the following steps:

1) Planning and Analysis
   - Waste stream analysis - identifying materials that will go into your project "waste stream:"
   - Determine amounts of "waste" materials
   - Determine where "waste" materials will be generated
   - Determine when "waste" materials will be generated
2) Determine Reuse and Recycling Options
   - Identify source reduction options.
   - Identify recyclable/recoverable materials - green waste, drywall, cardboard, untreated lumber, metals, etc.
3) Contact Commercial Haulers
   - Work with the hauler(s) to determine containers, pickup frequency, and materials to be collected
4) Contact Trades and Subcontractors
   - Inform, train and motivate all trades and subcontractor personnel to ensure an effective on-site/off-site-recycling program. Avoid contamination of waste streams (such as paint deposited in a drywall container) and ensure standard, written, operations procedures occur through the project.
5) Prepare the Site
   - Prominent signage on recyclable and trash bins. Coordinate trades and subs to assure all personnel are aware of how, when and where to separate their "wastes."
6) Support, Report and Modify
   - Support and promote the onsite-recycling program.
   - Report on the performance of the project, particularly as it relates to the project goals and projects.
   - Modify procedures and policies during construction as feedback and data suggest frequency, and materials to be collected, implement an on-site recycling program.

24. How potential hazardous materials encountered in the installation of energy efficiency measures will be managed; and whether the ESCO has been cited by the Washington Department of Ecology, Federal Environmental Protection Agency, or any other regulatory agency for inappropriate handling, transportation or disposal of hazardous materials. If cited what was the ESCOs remedy. Being cited does not automatically constitute disqualification as an ESCO.

We are aware that depending on the age and other factors of buildings selected for retrofit under the Washington State GA program, asbestos and other hazardous materials may exist in some of the buildings in which work will be performed. Should asbestos or other hazardous material be encountered, we will notify the proper project representatives and cease work in the area until the condition is corrected. We are not responsible for abatement of asbestos or other hazardous materials, but will assist the client with planning and coordinating project schedules to minimize time delays and impact.

To date, we have not been cited by the Washington Department of Ecology, Federal Environmental Protection Agency or any other regulatory agencies for the inappropriate handling, transportation or disposal of hazardous materials.

COMPUTATION OF ENERGY BASELINE AND POST-INSTALLATION ENERGY USE

25. Describe the methodology used to calculate baseline energy use and savings of different types of EEMs. This should include a description of various software tools that are utilized in the calculation process. Include the methodology used for campus settings that are master metered.

To accurately assess a performance contract's effectiveness, the capability to make comparisons of pre-retrofit and post-retrofit conditions under similar terms is necessary. To accomplish this, baselines are established to document pre-retrofit conditions and to serve as the basis for post-retrofit analysis.

Honeywell baseline development methodology includes the following:

- Discusses all variables affecting baseline energy use (such as weather, operating hours, set point changes, etc).
- Describes how each variable will be/was quantified, i.e. measurements, monitoring, assumptions, manufacturer data, maintenance logs, engineering resources, etc.
- Discusses variables' impact on savings uncertainty.
- Defines key system performance factors characterizing the baseline conditions (such as comfort conditions, lighting intensities, temperature set points, etc.).
- Discusses baseline adjustment methodologies and factors affecting the baseline in the post-retrofit period.
- Provides the following details of baseline data collected:
    - Parameters monitored
    - Details of equipment monitored, i.e. location, type, model, quantity, etc.
    - Desired uncertainty level.
    - Sampling plan, including details of usage groups and sample sizes.
    - Duration, frequency, interval, and seasonal or other requirements of measurements
    - Personnel, dates, and times of measurements
    - Proof of government witnessing of measurements.
    - Monitoring equipment used
    - Installation requirements for monitoring equipments
    - Certification of calibration / calibration procedures followed
    - Expected accuracy of measurements/monitoring equipment
    - Quality control procedures used
    - Results of measurements
    - Completed data collection forms, if used.

For HVAC and central plant measures, Honeywell's solutions development engineers perform detailed surveys of existing HVAC and related systems to produce a comprehensive inventory and establish baseline conditions for operation and performance parameters. Data loggers are employed to measure equipment energy consumption, equipment run time, hot, chilled and condenser water flows and temperatures, and space temperatures. Existing control system trends are also utilized to determine values of similar parameters when possible. Using building modeling tools such as eQuest from DOE, our own proprietary Modified Bin Method spreadsheet model, and other commercially available industry analysis software, Honeywell develops baseline energy models for each building analyzed, and calibrates the models based on data logging results, customer meter data when available, and utility bills. We also use these models to evaluate potential solutions, including chiller replacements, air handler replacements, VAV conversions, HVAC controls strategies, steam or heating hot water measures, and others as applicable.

For lighting and related measures, Honeywell completes a room-by-room facility survey, including data logging for run hours and occupancy, and measurement of kW by fixture type, and establishes the energy baseline for every fixture proposed for retrofit. Honeywell takes lighting level measurements where perceived deficiencies or overlit conditions are noted. Fixture type, lamp type, existing kW, draw, and burn hours define the baseline energy consumption per year and baseline electric demand. Honeywell conducts similar logging and measurement activities of pertinent parameters, and incorporates these measurements into its facility models, to accurately develop the baselines for other measures. We provide measurements and calculations for baseline development as part of the final proposal.

Honeywell's baseline development methodology (outlined in the figure below) follows the direction provided by the customer and is in compliance with the requirements under this RFP.

Option A - Baseline Definition Approach
An Option A approach involves a retrofit or system level M&V assessment. Performance or operational factors are spot or short-term measured during the baseline, or stipulated. Stipulations are based on assumptions, analysis of historical data, or manufacturer's data. Option A focuses on the physical assessment of equipment change-outs to ensure the installation is to specification.

Option B - Baseline Definition Approach
An Option B approach also involves a retrofit or system-level M&V assessment, similarly to Option A. Performance and operational factors are measured at the component or system level with appropriate spot or short-term measurements to characterize the baseline condition.

Option C - Baseline Definition Approach
An Option C approach defines baseline characterization by studying the overall energy use in a facility and identifying the parameters affecting total building or facility energy use patterns. The evaluation of whole-building utility data is completed using methods ranging from simple billing comparison to multivariate linear regression analysis. Commercially available software packages like *METRIX* are used for this purpose. All significant, cost-effectively-attainable variables that affect energy consumption need to be gathered from the baseline period. These critical variables may include weather, occupancy schedules, set points, and operating schedules. The Option C approach usually requires at least 13 to 24 months of continuous baseline data.

Option D - Baseline Definition Approach
An Option D approach involves calibrated computer simulation models of component or whole-building energy consumption to determine energy savings. The calibration of the model is performed by linking simulation inputs to baseline conditions. Thus characterizing baseline conditions for an Option D approach may involve methods used in any or all of the previous Option A, B, and C approaches. Spot or short-term metering, static data (manufacturer's or name-plate), or engineering assumptions may be used to calibrate component models, and long term whole-building energy use data may be used to calibrate the whole-facility-level simulations.

26. Describe potential scenarios where a modified baseline may be proposed.

If all things were equal, energy efficiency programs would decrease the use of energy units (kilowatt hours, cubic feet of gas, etc.) to operate a facility during the current calendar year period as compared to the baseline period. The costs avoided are then simply the difference in units consumed at a given billing rate, between the two measured periods.

Since all things will not be equal between the current and baseline periods, adjustments are made prior to calculating the energy savings. Adjustments are made to the base period in order to reflect energy usage as if the same conditions existed in the base period, as during the current period. The adjusted base period is referred to as the adjusted baseline. In other words, the adjusted baseline is simply a model of facility energy characteristics that show what energy consumption would have been in the base period, had conditions in the base been similar to the current period.

The most common adjustments include, but are not limited to:

- Billing period length
- Weather
- Utility Cost Rate Schedules
- Schedule of Operations
- Occupancy, new equipment and building additions
- Other CCPS adjustments as discovered

27. Describe the ESCO's utilization of M&V processes in the establishment of baseline energy use and the post installation energy use.

The Honeywell M&V plan uses the pre-retrofit utility consumption and operating parameters established in the baseline for all savings calculations during the term of the project. Each methodology or procedure will be approved by the customer prior to implementation. The intent of the M&V plan is to verify that the EEMs installed by Honeywell will provide the expected energy savings. Therefore, Honeywell collects data and relative information during the post-retrofit period to demonstrate that the installed equipment is performing at expected levels and continuously collect/measure the energy consumption of the retrofitted equipment. Honeywell also conducts audit/field inspection surveys to ensure all mechanical, electrical and utility systems are operating as required and to assess the operational efficiencies of the systems and equipment installed. It will also submit semi-annual/annual reports verifying and calculating the energy and cost savings. These reports include energy baseline information, monitoring period energy use, results of inspections of the installed equipment/systems, energy and cost savings, and recommendations to provide optimum energy performance.

Listed below are the steps and post-retrofit activities that Honeywell takes to ensure that the savings will be accurately measured for the entire length of the contract:

1. Meet with the Customer's team and present M&V options for EEMs.
2. Develop a draft M&V Plan (based on the outcome of the M&V presentation) and deliver to the customer for review. The plan will include a detailed metering plan and will identify meter locations, measured parameters (temperature, flow rate, electrical power, etc.), units and frequency of measurements. In addition, the plan will indicate proposed meter manufacturer(s), model number(s) and specification of instrument accuracy.
3. After the customer reviews the draft plan, Honeywell meets again with the customer to address questions and concerns.
4. Plan is then modified to reflect issues brought up in the review meeting.
5. Perform pre-installation (baseline) measurements as directed in the M&V Plan or develop baseline models using utility consumption data.
6. The final M&V Plan becomes an exhibit in the energy savings performance contract along with the pre-installation measurements.
7. Upon completion of the EEM installation, commissioning and training, post-installation measurements are taken in accordance with the M&V Plan.
8. Annual M&V activities are conducted to verify operation of the installed equipment/systems and/or calculation of energy savings.
9. Monthly, semi-annual and/or annual M&V reports are prepared according to the plan.
10. Sustain energy savings.
11. Identify additional opportunities and perform system optimization to maximize the energy savings.
12. Provide optional training and help the client make informed decisions about their energy use and provide necessary tools to fully evaluate their long-term energy needs.

The M&V effort by Honeywell is designed for:

- Measurement and Verification of energy and cost savings
- Allocation of responsibility for project performance
- Provide feedback on the performance of EEMs
- Long-term feedback for ongoing system optimization/fine-tuning and preventive maintenance of EEMs
- Measure energy use before and after installation of EEMs.

Energy and water savings are determined by comparing the energy and water use associated with a facility or certain systems within a facility before and after the installation of an EEM or other measure. The "before" case is the baseline. The "after" case is the post-installation or performance period.

M&V approaches are divided into two general types: retrofit isolation and whole facility. Retrofit isolation methods look only at the affected equipment or system independent of the rest of the facility; whole facility methods consider only the total energy use while ignoring specific equipment performance. Options A and B are retrofit isolation methods; Option C is a whole facility method. Option D can be used as either, but is usually applied as a whole facility method.

No option is necessarily better or more/less expensive than another. Each M&V option is applicable to different situations and different variables determines an optimal approach. The M&V decision map shown above is widely used by the industry and helps the M&V specialists in deciding which option to use for individual or a combination of EEMs.

M&V Option	*Performance Verification Techniques*
Option A ■ Verifying that the measure has the potential to perform and to generate savings	■ Partially Measured Retrofit Isolation Engineering calculations (possibly including spot measurements) with stipulated values
Option B ■ Verifying that the measure has the potential to perform and verifying actual performance by end use.	■ Measured Retrofit Isolation Engineering calculations with metering and monitoring throughout term of contract
Option C ■ Verifying that the measure has the potential to perform and verifying actual performance (whole building analysis.)	■ Whole building/utility meter billing analysis using techniques from simple comparison to multivariable regression analysis
Option D ■ Verifying actual performance and savings through simulation of facility components and/or the whole facility	■ Calibrated energy simulation/modeling; calibrated with hourly or monthly utility billing data and/or end use metering.

SAVINGS AND EQUIPMENT PERFORMANCE GUARANTEES

28. The ESCO's project cost guarantee policies and procedures; including remedies when project costs exceed ESCO estimates.

Upon completion of final negotiations and award for a given scope of work, we are responsible for completing the project installation for the negotiated, firm fixed price. The scope and pricing will have been reviewed and agreed to by both Honeywell and the contracting authority authorized by the client prior to project award.

Should the scope be modified after project award and prior to acceptance, we determine specific cost and savings impacts associated with this/these change(s), utilizing the same open-book pricing detail as before.

The project schedule is provided in a final proposal, and reviewed during negotiations. Our project managers rigorously monitor the schedule and provide updates and feedback to representatives of the client during installation. For delays beyond the control of Honeywell, the cost impact to the project will be assessed; if or when appropriate, contract modifications will be pursued.

The contingency budget is established to cover unanticipated construction costs, such as accessibility to work areas. The contingency budget is reserved first for these items, with any remaining contingency dollars available to be used by the owner for increases in scope.

Honeywell does not use contingency to cover errors and/or omissions in the project development and design process. Any costs that occur as a result of this will be absorbed by Honeywell at no additional cost to the owner and will not use contingency dollars.

We typically apply a uniform contingency percentage to all estimated direct project costs (both subcontracted equipment and services, and Honeywell in-house costs). We understand and agree that all unused contingency funds will revert to the owner or be applied to additional work scope through a change order approved by the owner.

As the performance contractor, Honeywell takes the full financial and technical risk of the project. The project will be installed for project price with no cost increases or change orders. Assuming there are no changes in the Owners scope of work after we have approval to proceed with the project, Honeywell will be responsible any unforeseen construction costs in excess of the quoted amount. Honeywell guarantees the project will come in or under budget. Additional costs (unless due to an Owner-initiated change order) will be the responsibility of Honeywell.

29. The ESCO's energy savings guarantee policies and procedures, including remedies when actual savings are lower than the ESCO's estimates and guarantees, and the length of the savings guarantees.

Our M&V plans adhere to the negotiated measurement and verification protocol established in the Energy Services Proposal agreed upon by the Owner. Honeywell measurement and verification personnel sign-off on all M&V data and reports.

Honeywell has demonstrated capabilities to apply measurement and verification methods correctly to develop and verify energy baselines, and to conduct post-installation and regular interval verification inspections to confirm guaranteed energy savings. We use industry standard guidelines for Monitoring and Verification (M&V) as defined by the International Performance Measurement and Verification Protocol (IPMVP) originally developed by the Department of Energy (DOE). Your expectations and project specifics dictate which protocol will be the most reasonable and cost-effective way to provide verifiable results. Through discussions conducted with the WA GA and the customer during the energy audit, Honeywell will prepare and submit a site-specific M&V plan that best suits the customer's needs, and establish risks to be assumed by Honeywell.

Our M&V approach for each technology category typically consists of more than one method. For each implemented measure, energy savings are derived from the agreed-upon site-specific M&V plan. The M&V plan will provide an explanation of the objectives for M&V activities define the parameters to be monitored, and provide a detailed description of the usage groups, population sizes and sample sizes that are proposed for each measure.

Honeywell will assign an M&V Specialist that is responsible for conducting post-installation and regular interval M&V activities. The M&V Specialist will work in close concert with the client's project team to ensure that accurate information is obtained.

The energy cost savings will be verified annually or as otherwise defined in the measurement and verification plan. Honeywell will provide the customer with savings reconciliation reports, together with relevant records relating to energy costs. To facilitate this, we ask our customers to permit us access to any maintenance records, drawings, or other data necessary to generate the M&V report.

Even with the most careful of calculations and planning, there are occasions wherein a shortfall can occur. Some examples include:

1. Errors in collecting energy data utilized to determine the achieved EEM cost savings.
2. On distributed energy projects, the key to achieving estimated energy savings is maintaining engine fuel efficiency, or heat rate, and ensuring engine availability. A poor heat rate can lead to excess fuel consumption, while excessive downtime has a direct impact on estimated savings. Any shortfalls for these two key operating variables will directly result in a shortfall in the estimated savings.
3. Changes in scope not reflected in final, guaranteed energy savings.

Savings are reconciled in the annual measurement and verification report. In the event the achieved savings are less than the estimated savings, the following procedures are reviewed and negotiated during the project development phase to mitigate shortfalls:

- The facility and/or measures will be examined to determine if there has been a change in the operation of the facility, or in the implementation of the measure. If so, a baseline adjustment will be made to account for the change(s).
- The measure will be examined to ensure proper operation. If the installed equipment is operating inefficiently or outside of the scope of the energy management plan, actions will be taken to correct performance levels and to ensure that the savings are achieved.

In the event that the savings guarantee is not met, Honeywell will first take steps to increase energy savings to comply with the guarantee. This may include re-engineering portions of the system or installing additional equipment at our expense. In the event we are unable to achieve the savings guarantee, Honeywell will reimburse the owner for the value of the missed guarantee.

30. The ESCO's equipment performance guarantee policies and procedures, including remedies when performance of equipment is not met.

On a typical energy savings performance contract, Honeywell guarantees the energy savings; therefore we have a vested interest in ensuring that all newly-installed or retrofitted equipment performs per manufacturers' specifications. In the event that installed equipment is not operating to required standards, Honeywell will first take steps to bring the equipment in line; this may include re-engineering portions of the system or installing additional equipment at our expense.

Performance of day-to-day repair and replacement of Honeywell-installed equipment is negotiable; however it is often tied to project performance. Honeywell bears the ultimate risk regardless of which party performs the activity. During the Detailed Investment Grade Audit we seek to clarify who is responsible for performing replacement of failed components or equipment replacement throughout the term of the contract and address it directly in the Energy Services Proposal. We will specifically address potential impacts on performance due to equipment failure. We specify expected equipment

life and warranties for all installed equipment and discuss replacement responsibility with the Owner when equipment life is shorter than the term of the contract.

Furthermore, we develop post construction maintenance/support plans collaboratively with our clients during the Investment Grade Audit phase. These plans typically include a listing and description of:

1. Energy consuming systems which require some level of maintenance to maintain optimal indoor environmental conditions and operating cost efficiencies
2. Tasks that the owner will be performing with in-house labor for each of the listed systems and/or equipment.
3. Tasks that the owners desires to perform with outside resources and the identification of the likely provider
4. Minimum maintenance requirements or standards that need to be followed to maintain the cost savings and indoor environmental outcome guaranteed by Honeywell.

31. Provide information on the ESCO's warranty enforcement role and the ESCO's responsibility, if any, when there is an equipment failure beyond the warranty period when the client agency has financed the project and assumed ownership of the installed equipment.

Equipment ownership generally passes to the owner at the completion and acceptance of the construction, unless they opt for an operating lease or power purchase agreement/PPA for renewable energy projects we install. In the case of operating leases and/or adoption of a PPA, an end-of-term purchase option is provided that allows the owner to purchase the equipment for the greater of 10% of the original purchase price or fair market value.

Regarding service responsibility during and at contract expiration, this is generally addressed in the original performance contract and can include:

- Owner assumes full responsibility for equipment service, including regular scheduled preventive maintenance and repairs/replacements.
- Honeywell assumes full responsibility for equipment service, including regular scheduled preventive. Owner assumes responsibility for maintenance and repairs/replacements.
- Honeywell assumes full responsibility for equipment service, including regular scheduled preventive and repairs/replacements.

We warrant that equipment and materials installed shall be of good quality and free from defects in materials and workmanship, including installation and setup, for a period of one (1) year from the date of completion of the equipment installation and the acceptance of beneficial use by the owner. Warranty service is generally provided during normal business hours, although we can make it available 24 hours-a-day, 365 days-a-year for a fixed fee or at a pre-determined overtime premium differential rate for desired systems or equipment.

In some cases, warranties are available beyond the standard 1-year period. In all cases, we will transfer these to the owner after the expiration of the initial 1-year warranty period. Examples of extended warranties include:

- Lighting Equipment: Ballasts – 5 years
- Lamps – 2 years
- Mechanical Equipment: Refrigeration Compressors – 5 years
- Heat Exchangers – 15 years

Warranty service during the initial one-year warranty period will be handled and coordinated through Honeywell. All calls will go to our 24-hour service center and appropriate factory trained technicians from Honeywell, our subcontractor or the equipment manufacturer will be sent to the site.

As an additional option, clients of the WA GA program can accept the provision of a maintained level of onsite lighting material bench stock in lieu of a full labor and material warranty on lighting lamps and ballasts. This allows for the client's on-site staff to quickly replace any failed devices and avoid the inconvenience of having to wait for a warranty call-out to get this done.

FINANCING ABILITY

32. The ESCO's project financing ability. Describe capability for carrying costs until completion of the installation of energy efficiency measures. Describe capability and willingness to fully finance project over a financing term including how the interest rate the ESCO would use is determined. Provide letters of commitment from funding sources or from ESCO's Chief Financial Officer if self-funded. Tax-exempt municipal lease financing does not qualify for ESCO financing ability.

Our financial strength provides the capability of short-term carrying costs for GA projects, as demonstrated on previous projects. We would like to explore with the GA, based on low project returns and marginal cash flow on GA projects, the potential for more rapid payment on future projects; this can be explored on a project-by-project basis and based on customer (owner) approval.

Typically, capital improvements are paid for from energy and operational savings associated with new equipment, consuming less energy and requiring less maintenance. Construction costs are generally financed through a third party, with Honeywell guaranteeing annual cost savings equal to the financed payments. Clients participating in this program may prefer to pursue other ways to finance projects; should this occur, we will work with them to find the most optimal program funds available to serve their best interests.

Honeywell has dedicated financial specialists who work with our clients and established global financing partners to offer customized, competitive, project-specific financing.

Honeywell Global Finance LLC (HGF) is a wholly-owned subsidiary of Honeywell, created to help arrange project specific financing for our customers. When financing is required, HGF works closely with the Honeywell project team and the customer to gain a detailed understanding of the project and help tailor a financial solution that meets the project's unique cash flow and structuring needs. HGF has the ability to structure Municipal Lease Purchase Agreements, Municipal Installment Purchase Agreements and Tax Exempt Private Placement Bonds for our customers. In 2007 and 2008, HGF originated over $240 Million in energy performance contracting financing for Honeywell.

Per request, a letter of commitment from Bank of America can be found on the following page.

Chris Youngs
Senior Vice President
Energy Services

Banc of America Public Capital Corp
370 17th Street, Ste. 3590
CO1-004-35-00
Email: chris.youngs@baml.com
Tel: (303) 617-1290
Fax: (206) 585-9712

February 20, 2013

Steve Goldberg
Director, Finance
Honeywell Global Finance

Re: State of Washington, Department of Enterprise Services, Request for Qualification Energy Program
Project No. 2013-133

Dear Mr. Goldberg:

On behalf of Banc of America Public Capital Corp ("BAPCC"), please accept this letter as confirmation that BAPCC is interested in providing financial services to the State of Washington and Honeywell Global Finance & Honeywell Building Solutions for energy efficiency projects.

BAPCC is a leading provider of equipment finance solutions to the state, local and federal government markets with one of the most complete offerings of tax-exempt and taxable municipal financing products available. A large portion of our transactions are structured as tax-exempt municipal lease purchase or installment purchase agreements; however, we are familiar with other non-traditional funding mechanisms as well. Our market expertise includes QECBs, QZABs, QSCBs and NewCREB transactions for energy efficiency projects.

As purely an indication of the current private placement market, 15 year tax-exempt rates for similar credits is currently ranging between 2.85-3.00%. Pricing and structure shall be subject to the capital markets at the time of finance proposal and based upon then current Swap rates, the final financed amount and weighted average life of the financing, and the credit of the ultimate issuer. Please note that this letter is not a commitment, offer or proposal to lend, and does not create any obligation of Bank of America or BAPCC.

In 2007, Bank of America announced our $20 billion, 10-year lending and investment commitment for environmental saving initiatives. Having finished this commitment four years ahead of schedule, Bank of America has now started a new $50 billion, 10-year environmental business and operational commitment for environmental initiatives to address climate change, demands on natural resources, and advance lower-carbon economic solutions.

We look forward to being of service to the State of Washington and Honeywell Global Finance & Honeywell Building Solutions. Pease do not hesitate to contact us with any questions or comments.

Sincerely yours,

Chris Youngs
Senior Vice President

An array of project financing options and services are available to clients, as described below:

- Capital Lease - most often utilized in the private sector markets. This structure is typically employed in commercial and industrial projects when the customer is comfortable with the debt implications of a lease. A capital lease is very common for energy-related projects, since it is easy to structure and offers interest rates directly related to the credit quality of the borrower.
- Municipal Bonds - used as a vehicle for financing performance contracts in the past. Although this funding method is used less frequently, this financing method can still be very cost effective.

Since program inception in the early 1980s, Honeywell has facilitated the financing of facility improvement and utility savings-based projects that have saved schools, universities, corporations, industry, municipalities, and the federal government billions of dollars in costs. The typical size of our project funding is between $500,000 and $10 Million; however, projects have ranged from as small as $250,000 to well over $50 Million, with financing terms falling between 3 and 15 years, up to 25 years available for certain long-term projects.

APPENDIX:

1. EXAMPLE ENERGY AUDIT WITH COST AND PRICING BREAKDOWNS
2. RESUMES OF KEY PERSONNEL
3. SF 330

APPENDIX 1:

EXAMPLE ENERGY AUDIT WITH COST AND PRICING BREAKDOWNS

TAB A: PRELIMINARY AUDIT FINDINGS

Base Year Utility Summary - All Buildings

Customer Name: East Grand School District
Base Year: Dec '07 - Nov '08

	Jan	Feb	Mar	Apr	May	Jun	Jul	Aug	Sep	Oct	Nov	Dec	Annual
Middle Park High School													
Tot Elect Energy & Dem Cost	$6,481	$6,395	$6,616	$6,868	$6,683	$4,620	$3,482	$5,067	$5,979	$6,969	$7,777	$6,254	$73,190
Total Fossil Fuel Cost	$4,661	$4,543	$4,425	$3,312	$2,961	$913	$321	$729	$784	$1,930	$4,264	$4,474	$33,317
Total Energy and Demand Cost	$11,142	$10,938	$11,041	$10,180	$9,643	$5,533	$3,802	$5,796	$6,763	$8,899	$12,041	$10,729	$106,507
East Grand Middle School													
Tot Elect Energy & Dem Cost	$8,066	$7,486	$6,889	$6,457	$5,874	$3,770	$3,988	$5,286	$6,136	$6,713	$6,578	$7,596	$74,840
Total Fossil Fuel Cost	$5,028	$5,283	$5,332	$5,224	$3,937	$2,604	$2,252	$1,832	$1,560	$2,766	$2,090	$4,915	$42,825
Total Energy and Demand Cost	$13,094	$12,769	$12,222	$11,681	$9,811	$6,374	$6,241	$7,119	$7,696	$9,479	$8,669	$12,511	$117,665
Fraser Valley Elementary School													
Tot Elect Energy & Dem Cost	$4,227	$3,484	$3,503	$3,426	$2,347	$1,012	$1,955	$3,184	$3,871	$4,164	$4,179	$3,472	$38,825
Total Fossil Fuel Cost	$2,753	$2,834	$3,321	$2,945	$2,926	$2,267	$207	$256	$1,187	$2,173	$2,940	$2,801	$26,611
Total Energy and Demand Cost	$6,980	$6,318	$6,824	$6,371	$5,273	$3,279	$2,162	$3,441	$5,059	$6,336	$7,119	$6,273	$65,436
Granby Elementary School													
Tot Elect Energy & Dem Cost	$2,674	$2,704	$2,462	$2,539	$2,137	$1,086	$979	$2,350	$2,902	$3,065	$2,977	$2,429	$28,304
Total Fossil Fuel Cost	$2,351	$2,351	$2,577	$1,914	$1,399	$615	$256	$542	$596	$974	$1,198	$2,215	$16,988
Total Energy and Demand Cost	$5,025	$5,055	$5,039	$4,453	$3,536	$1,701	$1,235	$2,891	$3,498	$4,038	$4,175	$4,644	$45,292
Grand Lake Elementary School													
Tot Elect Energy & Dem Cost	$1,429	$1,408	$1,344	$1,325	$1,299	$678	$792	$902	$1,239	$1,289	$1,250	$1,275	$14,229
Total Fossil Fuel Cost	$1,468	$1,425	$1,521	$1,271	$971	$529	$286	$379	$476	$669	$744	$1,405	$11,143
Total Energy and Demand Cost	$2,897	$2,833	$2,865	$2,596	$2,269	$1,207	$1,078	$1,280	$1,715	$1,958	$1,994	$2,680	$25,372
Indian Peaks Charter School*													
Tot Elect Energy & Dem Cost	$556	$546	$508	$518	$389	$246	$260	$251	$358	$461	$503	$544	$5,140
Total Fossil Fuel Cost	$400	$358	$376	$333	$109	$28	$0	$25	$61	$185	$301	$361	$2,537
Total Energy and Demand Cost	$956	$904	$884	$852	$498	$273	$260	$277	$419	$646	$805	$905	$7,677
District Office													
Tot Elect Energy & Dem Cost	$582	$560	$551	$464	$429	$427	$418	$492	$472	$515	$504	$529	$5,943
Total Fossil Fuel Cost	$917	$949	$916	$740	$445	$292	$160	$164	$182	$294	$521	$784	$6,364
Total Energy and Demand Cost	$1,499	$1,509	$1,468	$1,204	$874	$719	$578	$656	$654	$809	$1,024	$1,313	$12,307
Transportation Facility													
Tot Elect Energy & Dem Cost	$686	$612	$762	$524	$457	$374	$362	$436	$490	$525	$643	$611	$6,483
Total Fossil Fuel Cost	$2,819	$2,521	$2,166	$1,723	$894	$325	$191	$182	$182	$753	$1,164	$2,502	$15,421
Total Energy and Demand Cost	$3,505	$3,133	$2,928	$2,248	$1,351	$698	$554	$618	$671	$1,278	$1,808	$3,113	$21,904
All Buildings													
Tot Elect Energy & Dem Cost	$24,700	$23,196	$22,636	$22,123	$19,614	$12,213	$12,235	$17,968	$21,447	$23,700	$24,412	$22,710	$246,954
Total Fossil Fuel Cost	$20,397	$20,264	$20,633	$17,462	$13,642	$7,572	$3,674	$4,109	$5,027	$9,743	$13,223	$19,457	$155,205
Total Energy and Demand Cost	$45,097	$43,460	$43,269	$39,585	$33,256	$19,785	$15,910	$22,077	$26,474	$33,443	$37,635	$42,168	$402,159

* Projected energy use, demand, and cost figures extrapolated forward based on four months of data for this site plus one year of data for similar site.

Initial Savings and Investment Summary for All ECM's:
East Grand School District

BP	IRP	IRP+W	ECM ID	ECM Name	Bldg	Utility $ Savings	O&M/Other $ Sav	Total $ Savings	Cap Contribution	Total Investment	SPBP, yrs
1	1	1		Project Development		N/A	N/A	N/A		TBD	N/A
1	1	1	3.1	Control system upgrades	Middle Park High School	$2,100		$2,100		$24,000	11.4
1	1	1	5.1	Lighting fixture retrofit	Middle Park High School	$5,100		$5,100		$71,000	12.7
1	1	1	5.2	Lighting controls retrofit	Middle Park High School	$4,400		$4,400		$9,000	2.0
1	1	1	6.1	Window and door weatherization	Middle Park High School	$1,300		$1,300		$40,000	23.1
			8.1	Install VFDs on AHU Motors	Middle Park High School					$47,000	
0	0	0	16.1	Kitchen equipment upgrades	Middle Park High School	$1,891		$1,891		$59,000	31.2
1	1	1	3.1	Control system upgrades	East Grand Middle School	$8,700		$8,700		$7,000	0.8
1	1	1	5.1	Lighting fixture retrofit	East Grand Middle School	$11,700		$11,700		$118,000	10.1
1	1	1	5.2	Lighting controls retrofit	East Grand Middle School	$4,500		$4,500		$2,000	2.0
			8.1	Install VFDs on AHU Motors	East Grand Middle School					$49,000	
0	1	1	8.2	DCW pump replacement	East Grand Middle School	$0		$0		$37,000	N/A
0	1	1	1.1	Boiler plant upgrades	Fraser Valley Elementary School	$200		$200		$59,000	550.0
1	1	1	3.1	Control system upgrades	Fraser Valley Elementary School	$7,100		$7,100		$33,000	4.6
0	1	1	4.1	Unit ventilator replacement	Fraser Valley Elementary School	$0		$0		$93,000	N/A
1	1	1	5.1	Lighting fixture retrofit	Fraser Valley Elementary School	$2,600		$2,600		$31,000	10.0
1	1	1	5.2	Lighting controls retrofit	Fraser Valley Elementary School	$2,000		$2,000		$6,000	3.0
1	1	1	6.1	Window and door weatherization	Fraser Valley Elementary School	$600		$600		$32,000	51.7
			8.1	Install VFDs on AHU Motors	Fraser Valley Elementary School					$16,000	
0	1	1	12.1	Uninterruptible power supply	Fraser Valley Elementary School	$0		$0		$11,000	N/A
1	1	1	3.1	Control system upgrades	Granby Elementary School	$300		$300		$19,000	60.0
0	1	1	4.2	HRU system installation	Granby Elementary School	$0		$0		$83,000	N/A
1	1	1	5.1	Lighting fixture retrofit	Granby Elementary School	$1,900		$1,900		$21,000	11.1
1	1	1	5.2	Lighting controls retrofit	Granby Elementary School	$1,600		$1,600		$7,000	4.4
1	1	1	6.1	Window and door weatherization	Granby Elementary School	$700		$700		$31,000	44.3
0	1	1	1.1	Boiler plant upgrades	Grand Lake Elementary School	$200		$200		$141,000	735.0
1	1	1	3.1	Control system upgrades	Grand Lake Elementary School	$1,300		$1,300		$36,000	26.2
0	1	1	4.1	Unit ventilator replacement	Grand Lake Elementary School	$0		$0		$77,000	N/A
1	1	1	5.1	Lighting fixture retrofit	Grand Lake Elementary School	$3,200		$3,200		$37,000	11.6
1	1	1	5.2	Lighting controls retrofit	Grand Lake Elementary School	$500		$500		$6,000	12.0
1	1	1	6.1	Window and door weatherization	Grand Lake Elementary School	$300		$300		$22,000	70.0
0	1	1	12.1	Emergency power supply replacement	Grand Lake Elementary School	$0		$0		$11,000	N/A
0	1	1	3.1	Control system upgrades	Indian Peaks Charter School	$60		$60		$17,000	283.3
0	1	1	5.1	Lighting fixture retrofit	Indian Peaks Charter School	$770		$770		$13,000	16.9
0	1	1	6.1	Window and door weatherization	Indian Peaks Charter School	$60		$60		$11,000	183.3
1	1	1	3.1	Control system upgrades	District Office	$400		$400		$7,000	17.5
0	1	1	4.2	HRU installation	District Office	$0		$0		$93,000	N/A
0	1	1	4.3	Furnace installation	District Office	$0		$0		$11,000	N/A
0	1	1	4.4	Furnace replacement	District Office	$0		$0		$16,000	N/A
0	1	1	4.5	GFRH installation	District Office	$0		$0		$33,000	N/A
1	1	1	5.1	Lighting fixture retrofit	District Office	$700		$700		$12,000	17.1
1	1	1	6.1	Window and door weatherization	District Office	$200		$200		$9,000	45.0
1	1	1	3.1	Control system upgrades	Transportation Facility	$2,300		$2,300		$38,000	16.5
1	1	1	5.1	Lighting fixture retrofit	Transportation Facility	$900		$900		$9,000	10.0
1	1	1	5.2	Lighting controls retrofit	Transportation Facility	$300		$300		$2,000	6.7
0	1	1	3.2	Fire and security system integration	District-wide	$0		$0		$497,000	N/A
0	0	1	11.1	Wind turbine installation	District-wide	$166,500		$166,500		$2,880,000	17.3
				Totals:		$234,381	$0	$234,381	$0	$4,883,000	20.8

Service contract increase:	$47,000

Service contract increase is comprised of $12,000 for M&V on base project, $2,000 additional M&V for IR project, $7,000 additional for Instant Alert, $8,000 additional M&V for wind turbine(s), and $18,000 for O&M and insurance for wind turbine(s).

Contractor

Weatherization	$145,000
Lighting Efficiency	$344,000
Mechanical	$836,000
Fire & Security	$497,000
Controls	$181,000

Initial Savings and Investment Summary for Recommended Base Project:
East Grand School District

ECM ID	ECM Name	Bldg	Utility $ Savings	O&M/Other $ Sav	Total $ Savings	Cap Contribution	Total Investment	SPBP, yrs
	Project Development		N/A	N/A	N/A		TBD	N/A
3.1	Control system upgrades	Middle Park High School	$2,100	$0	$2,100	$0	$24,000	11.4
5.1	Lighting fixture retrofit	Middle Park High School	$5,100	$0	$5,100	$0	$71,000	12.7
5.2	Lighting controls retrofit	Middle Park High School	$4,400	$0	$4,400	$0	$9,000	2.0
6.1	Window and door weatherization	Middle Park High School	$1,300	$0	$1,300	$0	$40,000	23.1
3.1	Control system upgrades	East Grand Middle School	$8,700	$0	$8,700	$0	$7,000	0.8
5.1	Lighting fixture retrofit	East Grand Middle School	$11,700	$0	$11,700	$0	$118,000	10.1
5.2	Lighting controls retrofit	East Grand Middle School	$4,500	$0	$4,500	$0	$2,000	2.0
3.1	Control system upgrades	Fraser Valley Elementary School	$7,100	$0	$7,100	$0	$33,000	4.6
5.1	Lighting fixture retrofit	Fraser Valley Elementary School	$2,600	$0	$2,600	$0	$31,000	10.0
5.2	Lighting controls retrofit	Fraser Valley Elementary School	$2,000	$0	$2,000	$0	$6,000	3.0
6.1	Window and door weatherization	Fraser Valley Elementary School	$600	$0	$600	$0	$32,000	51.7
3.1	Control system upgrades	Granby Elementary School	$300	$0	$300	$0	$19,000	60.0
5.1	Lighting fixture retrofit	Granby Elementary School	$1,900	$0	$1,900	$0	$21,000	11.1
5.2	Lighting controls retrofit	Granby Elementary School	$1,600	$0	$1,600	$0	$7,000	4.4
6.1	Window and door weatherization	Granby Elementary School	$700	$0	$700	$0	$31,000	44.3
3.1	Control system upgrades	Grand Lake Elementary School	$1,300	$0	$1,300	$0	$36,000	26.2
5.1	Lighting fixture retrofit	Grand Lake Elementary School	$3,200	$0	$3,200	$0	$37,000	11.6
5.2	Lighting controls retrofit	Grand Lake Elementary School	$500	$0	$500	$0	$6,000	12.0
6.1	Window and door weatherization	Grand Lake Elementary School	$300	$0	$300	$0	$22,000	70.0
3.1	Control system upgrades	District Office	$400	$0	$400	$0	$7,000	17.5
5.1	Lighting fixture retrofit	District Office	$700	$0	$700	$0	$12,000	17.1
6.1	Window and door weatherization	District Office	$200	$0	$200	$0	$9,000	45.0
3.1	Control system upgrades	Transportation Facility	$2,300	$0	$2,300	$0	$38,000	16.5
5.1	Lighting fixture retrofit	Transportation Facility	$900	$0	$900	$0	$9,000	10.0
5.2	Lighting controls retrofit	Transportation Facility	$300	$0	$300	$0	$2,000	6.7
	Totals:		$64,700	$0	$64,700	$0	$629,000	9.7

Serv cont increase for annual audit :		$12,000
Utility $ Savings Fraction:		16.1%

Service contract increase is comprised of $12,000 for M&V on base project.

Initial Savings and Investment Summary for Recommended Infrastructure Revitalization Project: East Grand School District

ECM ID	ECM Name	Bldg	Utility $ Savings	O&M/Other $ Sav	Total $ Savings	Cap Contribution	Total Investment	SPBP, yrs
	Project Development		N/A	N/A	N/A		TBD	N/A
3.1	Control system upgrades	Middle Park High School	$2,100	$0	$2,100	$0	$24,000	11.4
5.1	Lighting fixture retrofit	Middle Park High School	$5,100	$0	$5,100	$0	$71,000	12.7
5.2	Lighting controls retrofit	Middle Park High School	$4,400	$0	$4,400	$0	$9,000	2.0
6.1	Window and door weatherization	Middle Park High School	$1,300	$0	$1,300	$0	$40,000	23.1
3.1	Control system upgrades	East Grand Middle School	$8,700	$0	$8,700	$0	$7,000	0.8
5.1	Lighting fixture retrofit	East Grand Middle School	$11,700	$0	$11,700	$0	$118,000	10.1
5.2	Lighting controls retrofit	East Grand Middle School	$4,500	$0	$4,500	$0	$2,000	2.0
8.2	DCW pump replacement	East Grand Middle School	$0	$0	$0	$0	$37,000	N/A
1.1	Boiler plant upgrades	Fraser Valley Elementary School	$200	$0	$200	$0	$59,000	550.0
3.1	Control system upgrades	Fraser Valley Elementary School	$7,100	$0	$7,100	$0	$33,000	4.6
4.1	Unit ventilator replacement	Fraser Valley Elementary School	$0	$0	$0	$0	$93,000	N/A
5.1	Lighting fixture retrofit	Fraser Valley Elementary School	$2,600	$0	$2,600	$0	$31,000	10.0
5.2	Lighting controls retrofit	Fraser Valley Elementary School	$2,000	$0	$2,000	$0	$6,000	3.0
6.1	Window and door weatherization	Fraser Valley Elementary School	$600	$0	$600	$0	$32,000	51.7
12.1	Uninterruptible power supply replacement	Fraser Valley Elementary School	$0	$0	$0	$0	$11,000	N/A
3.1	Control system upgrades	Granby Elementary School	$300	$0	$300	$0	$19,000	60.0
4.2	HRU system installation	Granby Elementary School	$0	$0	$0	$0	$83,000	N/A
5.1	Lighting fixture retrofit	Granby Elementary School	$1,900	$0	$1,900	$0	$21,000	11.1
5.2	Lighting controls retrofit	Granby Elementary School	$1,600	$0	$1,600	$0	$7,000	4.4
6.1	Window and door weatherization	Granby Elementary School	$700	$0	$700	$0	$31,000	44.3
1.1	Boiler plant upgrades	Grand Lake Elementary School	$200	$0	$200	$0	$141,000	735.0
3.1	Control system upgrades	Grand Lake Elementary School	$1,300	$0	$1,300	$0	$36,000	26.2
4.1	Unit ventilator replacement	Grand Lake Elementary School	$0	$0	$0	$0	$77,000	N/A
5.1	Lighting fixture retrofit	Grand Lake Elementary School	$3,200	$0	$3,200	$0	$37,000	11.6
5.2	Lighting controls retrofit	Grand Lake Elementary School	$500	$0	$500	$0	$6,000	12.0
6.1	Window and door weatherization	Grand Lake Elementary School	$300	$0	$300	$0	$22,000	70.0
12.1	Emergency power supply replacement	Grand Lake Elementary School	$0	$0	$0	$0	$11,000	N/A
3.1	Control system upgrades	Indian Peaks Charter School	$60	$0	$60	$0	$17,000	283.3
5.1	Lighting fixture retrofit	Indian Peaks Charter School	$770	$0	$770	$0	$13,000	16.9
6.1	Window and door weatherization	Indian Peaks Charter School	$60	$0	$60	$0	$11,000	183.3
3.1	Control system upgrades	District Office	$400	$0	$400	$0	$7,000	17.5
4.2	HRU installation	District Office	$0	$0	$0	$0	$93,000	N/A
4.3	Furnace installation	District Office	$0	$0	$0	$0	$11,000	N/A
4.4	Furnace replacement	District Office	$0	$0	$0	$0	$16,000	N/A
4.5	GFRH installation	District Office	$0	$0	$0	$0	$33,000	N/A
5.1	Lighting fixture retrofit	District Office	$700	$0	$700	$0	$12,000	17.1
6.1	Window and door weatherization	District Office	$200	$0	$200	$0	$9,000	45.0
3.1	Control system upgrades	Transportation Facility	$2,300	$0	$2,300	$0	$38,000	16.5
5.1	Lighting fixture retrofit	Transportation Facility	$900	$0	$900	$0	$9,000	10.0
5.2	Lighting controls retrofit	Transportation Facility	$300	$0	$300	$0	$2,000	6.7
3.2	Fire and security system integration	District-wide	$0	$0	$0	$0	$497,000	N/A
	Totals:		$65,990	$0	$65,990	$0	$1,832,000	27.8

Serv cont increase for annual audit :		$21,000
Utility $ Savings Fraction:		16.4%

Service contract increase is comprised of $12,000 for M&V on base project, $2,000 additional M&V for IR project, and $7,000 additional for Instant Alert.

B. AUDIT PROPOSAL

Overview of Technical Energy Audit Agreement & Project Proposal Documents

March 11, 2009

The five enclosed/attached documents are templates required by the Governor's Energy Office/ GEO and include additions to reflect the specific scope for your project:

1. **Contract for Technical Energy Audit and Project Proposal**
   ("***EGSD TEAPP Contract 3-11-09.doc***")
   Fourteen pages of boiler plate State T's & C's modified as appropriate for local political subdivisions (e.g. East Grand School District).

2. **Exhibit A to Technical Energy Audit & Project Proposal Contract - Scope of Work**
   ("***EGSD TEAPP Exh. A Scope of Work 3-11-09.doc***")
   First five (5) pages are State standards for audit activities, milestones, deliverables, etc. The last four (4) pages reflect the customized audit approach and deliverables for your project.

3. **Exhibit B to Technical Energy Audit & Project Proposal Contract - Notice of Acceptance of Technical Energy Audit Report**
   ("***EGSD TEAPP Exh. B Notice of Audit Acceptance 3-11-09.doc***")
   This is a 1-page State standard document that you will sign when you have accepted the final audit deliverable.

4. **Exhibit C to Technical Energy Audit & Project Proposal Contract - Buildings Included in Scope of Work**
   ("***EGSD TEAPP Exh. C Bldg list 3-11-09.doc***")
   This exhibit lists the buildings, square footage, audit fee breakdown and repeats the scope narrative from Attachment A.

5. **Exhibit D to Technical Energy Audit & Project Proposal Contract - Project Cost and Pricing Elements**
   ("***EGSD TEAPP Exh. D Cost & Pricing 3-11-09.doc***")
   This exhibit contains the open book pricing model that is included in our current agreement with the GEO. Mark-up levels and fees are reduced for your project from the maximum amounts allowed in our GEO agreement. This open book model will be used to establish construction pricing as well.

This page is intentionally blank.

East Grand School District
Contract for Technical Energy Audit and Project Proposal
with
Honeywell Building Solutions

1. PARTIES

This Contract is entered into by and between Honeywell Building Solutions (hereinafter called "Contractor"), and the East Grand School District (hereinafter called the "Owner").

2. EFFECTIVE DATE AND NOTICE OF NONLIABILITY.

This Contract shall not be effective or enforceable until it is approved and signed by the Owner or its designee (hereinafter called the "Effective Date"), but shall be effective and enforceable thereafter in accordance with its provisions. The Owner shall not be liable to pay or reimburse Contractor for any performance hereunder, including, but not limited to costs or expenses incurred, or be bound by any provision hereof prior to the Effective Date.

3. RECITALS

A. Authority, Appropriation, And Approval

Authority exists in the law and funds have been budgeted, appropriated and otherwise made available and a sufficient unencumbered balance thereof remains available for payment and the required approval, clearance and coordination have been accomplished from and with appropriate elected and appointed Owner officials.

B. Purpose and State's Role

The Governor's Energy Office (GEO) created this Contract for political subdivisions to use to obtain a technical energy audit of their facilities from a GEO pre-approved private energy service company (ESCO). The purpose of the audit is to perform the Work set forth in §6, below.

4. DEFINITIONS

The following terms as used herein shall be construed and interpreted as follows:

A. Contract

"Contract" means this Contract, its provisions, attached exhibits, documents incorporated by reference under the terms of this Contract, and any future modifying agreements, exhibits, attachments or references incorporated pursuant to Owner's Fiscal Rules and Policies.

B. Work

Work consists of the tasks Contractor is to perform in order to fulfill its obligations under this Contract.

C. Goods

"Goods" means any physical item used, produced, or manufactured either separately or in conjunction with the Work performed and Services rendered hereunder.

D. Services

"Services" means services performed or tangible material produced either separately or in conjunction with the Work performed and Goods provided hereunder.

E. Subcontractor

Third-party vendors of goods and/or services, if any, are hereinafter referred to as "subcontractors."

F. Parties

"Party" or "Parties" means one or both of the Owner and Contractor.

5. TERM and EARLY TERMINATION

A. Initial Term -Work Commencement

The initial term of this Contract shall commence on the later of either the Effective Date or March 31, 2009, and terminate on January 31, 2010 or upon completion of Work, unless sooner terminated as provided for below, herein. Performance of the Parties' respective obligations under this Contract shall begin as soon as practicable following commencement of the initial term.

B. Temporary Extension

At its sole discretion, the Owner, upon written notice to Contractor, may unilaterally extend the term of this Contract for a period not to exceed two months if the Parties are negotiating a replacement contract (and not merely seeking a term extension) at or near the end of any initial term or an extension thereof. The provisions of the Contract in effect when said notice is given, including, but not limited to prices, rates, and delivery requirements, shall remain in effect during said two month extension. However, the two-month extension shall immediately terminate when and if a replacement contract becomes effective following the Owner's approval and signature.

C. Early Termination

This Contract is subject to early termination in accordance with the provisions of the Remedies section below herein.

6. STATEMENT OF WORK

A. Work

Contractor shall perform a technical energy audit and provide a proposal to the Owner in accordance with **Exhibit A**, attached hereto and incorporated by reference herein. The audit shall determine the feasibility and cost of implementing energy and water saving measures for the Owner, and based on such determination, for Contractor to propose a plan for implementing such measures through an Energy Performance Contract. Thereafter, if the Owner, in its sole discretion, desires to accept Contractor's Technical Energy Audit and Project Proposal, which acceptance shall be made within 60 days of the Owner's receipt of such proposal in a form substantially similar to **Exhibit B**, attached hereto. The Parties may enter into a new contract, entitled "Energy Performance Contract," based on such proposal, the form of which shall be supplied by the Owner and shall comply with Colorado Revised Statute ("CRS") §24-30-2001 which describes the application and use of performance contracting for public entities in Colorado. The audit shall be performed at the location(s) listed in **Exhibit C,** attached hereto and incorporated by reference herein.

B. Time of Performance

The Work shall be completed during the initial term or any extension thereof.

C. Goods and Services

Contractor shall procure goods and services necessary to complete the Work provided for herein.

D. Employees

All persons employed hereunder shall be considered Contractor's or subcontractors' employee(s) for all purposes and shall not be employees of the Owner for any purpose.

7. PAYMENTS TO CONTRACTOR

Contractor shall be compensated as follows:

A. Basis and Maximum Amount

Except as provided for below in subsections i. and ii., within 60 days after Owner's formal acceptance of the final Technical Energy Audit and Project Proposal Contract, Owner shall pay to Contractor a sum not to exceed $35,670 in accordance with the Cost and Pricing Elements presented in **Exhibit D,** attached hereto and incorporated for reference herein. The Owner shall not be liable to pay or reimburse Contractor for any performance hereunder prior to the Effective Date.

i. Payment Through Performance Contract

Owner shall have no direct payment obligations to the Contractor under this contract provided that Contractor and Owner execute an Energy Performance Contract within 60 days after execution and issuance of the Notice of Acceptance (**Exhibit B**) of the final Technical Energy Audit and Project Proposal. However, the above stated cost of the completed audit shall be incorporated into Contractor's total project costs and paid through the Energy Performance Contract funding mechanisms.

ii. Project With Insufficient Savings

Should the Contractor determine at any time during the Technical Energy Audit that savings cannot be attained to meet Owner's terms as required by CRS §24-30-2001, the Technical Energy Audit shall be terminated by written notice by the Contractor to Owner. In this event this Contract shall be terminated and the Owner shall not be liable to pay Contractor, in whole or part, the amount specified in Section 7A.

B. Payment

i. Method and Time

The Contractor shall submit an invoice to the Owner in the form and manner approved by the Owner. Contractor shall submit invoices within 60 days after the end of the period for which payment is requested. The Owner shall make payment in full with respect to each invoice acceptable to it within 30 days of receipt thereof, after which uncontested unpaid amounts shall bear interest at a rate of one percent per month. Interest shall not arise if a good faith dispute exists as to the Owner's obligation to pay all or a portion of an invoice.

ii. Available Funds-Contingency-Remedies

The Owner is prohibited by law from making fiscal commitments beyond the term of its current fiscal period. Therefore, Contractor's compensation is contingent upon the continuing availability of Owner appropriations as provided in §2 of the Colorado Special Provisions, set forth below herein. If federal appropriations or Contracts fund this Contract in whole or in part, the Owner's performance hereunder is contingent upon the continuing availability of such funds. Payments pursuant to this contract shall only be made from available funds encumbered for this Contract, and the Owner's liability for such payments shall be limited to the amount remaining of such encumbered funds. If Owner funds are not appropriated, or otherwise become unavailable to fund this Contract, the Owner may immediately terminate the Contract in whole or in part without further liability in accordance with the Termination for Cause subsection of the Remedies section of this Contract. All payments are subject to the general Remedies section of this Contract.

iii. Return of Funds

Any funds paid to Contractor hereunder which are not expended in connection herewith shall be refunded by Contractor within 30 days of termination hereof. Any funds not required to complete Contractor's obligations hereunder shall be de-obligated by the Owner. If Contractor receives overpayments, Contractor shall refund all excess funds to the Owner within 30 days of the later of

a) the receipt of such funds, or

b) the determination of such overpayment. Under no circumstances shall unexpended or excess funds received by Contractor under this Contract be refunded or paid to any party other than the Owner.

iv. Erroneous Payments-Remedies

Payments made to Contractor in error for any reason, including, but not limited to overpayments or improper payments may, at the Owner's sole discretion, be recovered from Contractor by deduction from subsequent payment under this Contract or other contracts between the Owner and Contractor, or by other appropriate methods.

8. REPORTING-NOTIFICATION

Reports and analysis required under this section shall be in accordance with procedures and in such form as prescribed by the State of Colorado – Governor's Energy Office/GEO.

A. Litigation

Within 15 days after being served with any pleading in a legal action at a court or administrative agency related to this Contract, Contractor shall notify the Owner of such action and deliver copies of such pleadings to the Owner's principal representative in accordance with the Notice section of this Contract.

B. Remedies

Contractor's failure to provide reports and notify the Owner in a timely manner in accordance with this section may result in the delay of payment of funds and/or termination under the Remedies section of this Contract.

9. CONTRACTOR RECORDS

Contractor shall make, keep, maintain and allow inspection and monitoring of the following records:

A. Maintenance

Contractor shall maintain a complete file of all records, documents, communications, notes and other written materials, electronic media files or communications, pertaining in any manner to the Work. Contractor shall maintain such records for (i) a period of three years after the date this Contract is

completed or terminated or final payment hereunder, whichever is later, or (ii) for such further period as may be necessary to resolve any pending matters, or (iii) until an audit has been completed and its findings have been resolved.

B. Inspection

Contractor shall permit the Owner or any other duly authorized agent of a governmental agency to audit, inspect, examine, excerpt, copy and/or transcribe Contractor's records related to this Contract and for a period of three years following termination hereof or final payment hereunder, whichever is later, to assure compliance with the terms hereof or to evaluate Contractor's performance hereunder.

C. Monitoring

Contractor also shall permit the Owner or any other duly authorized agent of a governmental agency, in their sole discretion, to monitor all activities conducted by Contractor pursuant to this Contract using any reasonable procedure, including, but not limited to: internal evaluation procedures, examination of program data, special analyses, on-site checking, and formal audit examinations.

10. CONFIDENTIAL INFORMATION-OWNER RECORDS

Contractor acknowledges that it may become privy to confidential information in connection with its performance hereunder, including, but not limited to Owner records, personnel records, and information concerning individuals.

A. Confidentiality

It shall be Contractor's responsibility to keep all Owner records and information confidential at all times and to comply with all laws and regulations concerning confidentiality of information to the same extent applicable to the Owner. Any request or demand for information in the possession of Contractor made by any third party shall be immediately forwarded to the Owner's principal representative for resolution.

B. Notification

Contractor shall notify its agent, employees, sub-contractors and assigns who may come into contact with confidential information that they are subject to the confidentiality requirements set forth herein, and shall provide each with a written explanation of such requirements before they are permitted to access information.

C. Use, Security, and Retention

No confidential information of any kind shall be distributed or sold to any third party or used by Contractor or its agents in any way, except as authorized by the Contract and as approved by the Owner. Contractor shall provide and maintain a secure environment that ensures confidentiality of all Owner records and other confidential information wherever located. Confidential information shall not be retained in any files or otherwise by Contractor or its agents, except as set forth in this Contract and approved by the Owner.

D. Disclosure-Liability

Disclosure of Owner records or other confidential information for any reason may be cause for legal action against Contractor or its agents by third parties, and defense of any such action shall be Contractor's sole responsibility.

11. CONFLICT OF INTEREST

A. Definition and Appearance

Contractor shall not engage in any business or personal activities or practices or maintain any relationships which conflict in any way with the full performance of Contractor's obligations hereunder. Contractor acknowledges that with respect to this Contract, even the appearance of a conflict of interest is harmful to the Owner's interests. Absent the Owner's prior written approval, Contractor shall refrain from any practices, activities or relationships that reasonably appear to be in conflict with the full performance of Contractor's obligations to the Owner hereunder.

B. Specific Prohibitions

Contractor's and sub-Contractor's officers, employees, or agents shall neither solicit nor accept gratuities, favors, or anything of monetary value from Contractor, potential contractors, or parties to sub-agreements. Contractor's employees, officers, and agents or any permitted sub-Contractor shall not participate in the selection, award, or administration of this Contract or sub-Contract if a conflict of interest or the

appearance thereof would occur. Such a conflict would arise when any of the following has a financial or other interest in the firm selected for award, to-wit:

i. an employee, officer or agent;
ii. any member of the employee's immediate family;
iii. an employee's partner; or
iv. an organization, which employs, or is about to employ, any of the aforementioned.

C. Determination by Owner-Default

If Contractor is uncertain whether the appearance of a conflict of interest exists, Contractor shall submit to the Owner a disclosure statement setting forth the relevant details for the Owner's consideration. Failure to promptly submit a disclosure statement or to follow the Owner's direction in regard to the apparent conflict shall be considered a material default of this Contract.

D. Code of Performance

Contractor and sub-contractors, if any, shall maintain a written code of standards governing the performance of their respective employees, agents, and contractors engaged in the award and administration of this Contract. Contractor shall provide a copy of such code to the Owner within 15 days of the Owner's written request therefore.

12. WARRANTIES

A. Services and Goods

During the term of this Contract, Contractor, as part of Contractor's obligations hereunder and at no additional cost to the Owner, warrants, as follows:

i. Specifications

All Services performed and all Goods delivered shall meet the specifications set forth in this Contract and are acceptable to the Owner.

ii. Suits, Claims, and Actions

There are not nor will there be any pending or threatened suits, claims, or actions of any type with respect to the Services or Goods provided, and

iii. Liens and Encumbrances

All Services performed and Goods provided are and shall remain free and clear of any liens, encumbrances, or claims arising by or through Contractor or any party related to Contractor.

B. Standard And Manner Of Performance

Contractor shall perform the Work in accordance with the highest standard of care, skill and diligence provided by a professional person or company in performance of similar Work. All services, consumables, products, and materials used in performance of the Services shall be of good quality and/or free from faults and defects. Contractor shall perform its obligations hereunder in the sequence and manner set forth in the Statement of Work section of this Contract.

C. Inspection and Verification

The Owner reserves the right to inspect all Services and Goods provided hereunder at all reasonable times and places to verify that they conform to the requirements of the Statement of Work section of this Contract.

D. Remedies

If the Contractor breaches any of its warranties, the Owner may require Contractor to promptly perform the Services or provide Goods again in conformity with Contract requirements, at no additional cost to the Owner. If such breaches cannot be, or are cured, the Owner may, in addition to any other remedies provided or in this Contract, require Contractor to take necessary action to ensure that future performance conforms to the provisions of this Contract; and equitably reduce the payment due to Contractor to reflect the reduced value of the Services performed or Goods provided. Any reduction, delay or denial of payment under this provision shall not constitute a breach of Contract or default by the Owner.

13. REPRESENTATIONS

A. Licenses, Permits, Etc.

Contractor warrants that as of the Effective Date it has, and that all times during the term hereof it will have, at its sole expense, all licenses, certifications, approvals, insurance, permits, and other authorizations

required by law to perform the Services and/or deliver the Goods specified herein. Additionally, all employees of Contractor performing services under this Contract shall hold the required licenses or certification, if any, to perform their duties. Contractor, if a foreign corporation or other entity transacting business in the State of Colorado, further certifies that it currently has obtained and shall maintain any applicable certificate of authority to do business in the State of Colorado and has designated a registered agent in Colorado to accept service of process. Any revocation, withdrawal or non-renewal of licenses, certifications, approvals, insurance, permits or any such similar requirements necessary for Contractor to properly perform this Contract, shall be deemed to be a default by Contractor and grounds for termination for cause of this Contract.

B. Legal Authority

Contractor warrants that it possesses the legal authority to enter into this Contract and that it has taken all actions required by its procedures, by-laws, and/or applicable laws to exercise that authority, and to lawfully authorize its undersigned signatory to execute this Contract and to bind Contractor to its terms. The person signing and executing this Contract on behalf of Contractor hereby represents, warrants, and, guarantees that they have full authorization to do so.

C. Tax Exempt Status

The Owner represents that it is not liable for any sales, use, excise, property or other taxes imposed by any federal, state or local governmental authority, nor for any Contractor franchise or income related tax. No taxes of any kind shall be charged to the State. The Owner's FEIN # is _____ and its tax exempt # is 5300982009080179.

14. INSURANCE

Contractor shall obtain and maintain insurance as specified below herein at all times prior to the termination or expiration of this Contract:

A. Worker's Compensation

Worker's Compensation Insurance as required by state statute, and Employer's Liability Insurance covering all of the Contractor's employees acting within the course and scope of their employment.

B. General Liability

Commercial General Liability Insurance written on ISO occurrence form CG 00 01 10/93 or equivalent, covering premises operations, fire damage, independent contractors, products and completed operations, blanket contractual liability, personal injury, and advertising liability with minimum limits as follows:

i. $1,000,000 each occurrence
ii. $1,000,000 general aggregate;
iii. $1,000,000 products and completed operations aggregate; and
iv. $50,000 any one fire; and

if any aggregate limit is reduced below $1,000,000 because of claims made or paid, the Contractor shall immediately obtain additional insurance to restore the full aggregate limit and furnish to the Owner a certificate or other document satisfactory to the Owner showing compliance with this provision.

C. Automobile Liability

Automobile Liability Insurance covering any auto (including owned, hired and non-owned autos) with a minimum limit as follows: $1,000,000 each accident combined single limit.

D. Additional Insured

The Owner shall be named as additional insured on the Commercial General Liability and Automobile Liability Insurance policies (leases and construction contracts require additional insured coverage for completed operations on endorsements CG 2010 11/85, CG 2037, or equivalent).

E. Primacy

Coverage required of the Contract shall be primary over any insurance or self-insurance program carried by the Owner.

F. Cancellation

The Insurance shall include provisions preventing cancellation or non-renewal without at least 30 days prior notice to the Owner by certified mail.

G. Subrogation Waiver

All insurance policies in any way related to the Contract and secured and maintained by the Contractor as required herein shall include clauses stating that each carrier will waive all rights of recovery, under subrogation or otherwise, against the Owner, its agencies, institutions, organizations, officers, agents, employees, and volunteers.

H. Satisfactory Insurers

All insurance policies and coverages required hereunder shall be issued by reputable insurance companies satisfactory to the Owner.

I. Certificates

Contractor shall provide certificates evidencing insurance coverage required hereunder to the Owner within 10 business days of the Effective Date or before commencement of Contractor's performance hereunder, whichever occurs first. No later than 15 days prior to the expiration date of any such coverage, Contractor shall deliver the Owner certificates of insurance evidencing renewals thereof. At any time during the term hereof, the Owner may request in writing, and the Contractor shall thereupon within 15 days supply to the Owner, evidence satisfactory to the Owner of compliance with the provisions of this section.

J. Public Entity

Notwithstanding subsection A, above, if Contractor is a "public entity" within the meaning of the Colorado Governmental Immunity Act, §CRS 24-10-101, et seq., as amended ("Act"), Contractor may at all times during the term of this Contract maintain only such liability insurance, by commercial policy or self-insurance, as is necessary to meet its liabilities under the Act. Upon request by the Owner, Contractor shall show proof of such insurance satisfactory to the Owner.

15. DEFAULT-BREACH

A. Defined

In addition to any breaches or defaults specified in other sections of this Contract, including, but not limited to the Colorado Special Provisions, the failure of either Party to perform any of its obligations hereunder entirely, partially, or in satisfactory manner, including, but not limited to, performing them in a timely manner, constitutes a default or breach. The institution of proceedings under any bankruptcy, insolvency, reorganization or similar legislation, by or against the Contractor, or the appointment of a receiver or similar officer for the Contractor or any of its property, and such proceedings or appointments are not vacated or fully stayed within 20 days after the institution or occurrence thereof; shall also constitute a default.

B. Notice and Cure Period

In the event of a default or breach, notice of such shall be given in writing by the aggrieved Party to the other Party in the manner provided in the Notice section of this Contract. If such default or breach is not cured within 30 days of receipt of written notice or cure of the default or breach has not begun within said period or has not been pursued with due diligence, the aggrieved Party may terminate this Contract by providing written notice thereof, given in the manner provided for in the Notice section of this Contract, effective 15 days from the date the notice of termination was received.

16. REMEDIES

If Contractor is in default under any provision of this Contract including, but not limited to the Special Provisions, the Owner shall have all of the remedies listed in this section in addition to all other remedies set forth in other sections of this Contract and as available at law or in equity. The Owner may exercise any or all of the remedies available to it, in its sole discretion, concurrently or consecutively.

A. Early Termination in the Public Interest

The Owner is entering into this Contract for the purpose of carrying out the public policy of the Owner, as determined by its elected and appointed officials. If this Contract ceases to further the public policy of the Owner, the Owner, in its sole discretion, may terminate this Contract in whole or in part. Exercise by the Owner of this right shall not be deemed a breach of the Owner's obligations hereunder. This subsection shall not apply to a termination of this Contract by the Owner for cause or default by Contractor, which shall be governed by the Termination for Cause and/or Default subsection of this Remedies section.

i. Method and Content.

The Owner shall give written notice of termination to Contractor in accordance with the notice provisions of **§15**, above, and **§17**, below, specifying the effective date of termination and whether it affects all or a portion of this Contract.

ii. Obligations and Rights.

To the extent specified in the termination notice, Contractor shall not incur further obligations or render further performance hereunder past the effective date of such notice, and shall also terminate outstanding orders and subcontracts with third parties. However, Contractor shall complete and deliver to the Owner all Services and Goods not terminated by the termination notice and may incur obligations as are necessary to do so within the Contract terms. In the sole discretion of the Owner, Contractor shall assign to the Owner all of Contractor's right, title, and interest under such terminated orders or subcontracts. Upon termination, Contractor shall take timely, reasonable and necessary action to protect and preserve property in the possession of Contractor in which the Owner has an interest. All finished or unfinished documents, data, studies, research, surveys, drawings, maps, models, photographs, and reports or other materials prepared by Contractor under this Contract or materials owned by the Owner in the possession of Contractor shall, at the option of the Owner, be delivered by Contractor to the Owner and shall become the Owner's property. Contractor shall complete and deliver to the Owner all Services and Goods not terminated by the termination notice and may incur obligations as are necessary to do so within the Contract terms.

iii. Payments.

If this Contract is terminated by the Owner for convenience, Contractor shall be paid an amount which bears the same ratio to the total compensation as the Services satisfactorily performed or the Goods satisfactorily delivered or installed bear to the total Services and Goods covered by this Contract, less payments previously made. Additionally, if the Contract is less than 60% completed, the Owner may reimburse Contractor for a portion of actual out-of-pocket expenses (not otherwise reimbursed under this Contract) it incurred that are directly attributable to the uncompleted portion of Contractor's obligations hereunder; provided that reimbursement shall not exceed the maximum amount payable to Contractor.

B. Termination for Cause and/or Default

If Contractor fails to perform any of its obligations hereunder with such diligence as is required to ensure their completion in a timely manner and such non-performance continues following notice, the Owner may notify Contractor in writing of such non-performance which specifies a cure period. If Contractor thereafter fails to promptly cure such non-performance within such time, the Owner, may, at its option, terminate this entire Contract or such part of this Contract as to which there has been delay or a failure to properly perform. Exercise by the Owner of this right shall not be deemed a breach of its obligations hereunder.

i. Method and Content

The Owner shall give written notice of termination to Contractor in accordance with the notice provisions hereof specifying the effective date of termination and whether it affects all or a portion of this Contract.

ii. Obligations and Rights

To the extent specified in the termination notice, Contractor shall not incur further obligations or render further performance hereunder past the effective date of such notice, and shall also terminate outstanding orders and subcontracts with third parties. However, Contractor shall complete and deliver to the Owner all Services and Goods not cancelled by the termination notice and may incur obligations as are necessary to do so within the Contract terms. In the sole discretion of the Owner, Contractor shall assign to the Owner all of Contractor's right, title, and interest under such terminated orders or subcontracts. Upon termination, Contractor shall take timely, reasonable and necessary action to protect and preserve property in the possession of Contractor in which the Owner has an interest. In the sole discretion of the Owner, Contractor shall assign to the Owner all of Contractor's right, title, and interest under such terminated orders or subcontracts. All finished or unfinished documents, data, studies, research, surveys, drawings, maps, models, photographs, and reports or other materials prepared by

Contractor under this Contract shall, at the option of the Owner, be delivered by Contractor to the Owner and shall become the Owner's property.

iii. Payments

The Owner shall only reimburse Contractor for accepted Services and Goods received up to the date of termination and, if after termination, it is determined that Contractor was not in default or that Contractor's action/inaction was excusable, such termination shall be treated as a termination for convenience and the rights and obligations of the Parties shall be the same as if this Contract had been terminated for convenience, as described above herein.

iv. Damages and Withholding

Notwithstanding any other remedial action by the Owner, Contractor also shall remain liable to the Owner for any damages sustained by the Owner by virtue of any default under this section by Contractor and the Owner may withhold any payment to Contractor for the purpose of mitigating the Owner's damages, until such time as the exact amount of damages due to the Owner from Contractor is determined. Further, the Owner may withhold amounts due to Contractor as the Owner deems necessary to protect the Owner against loss because of outstanding liens or claims of former lien holders and to reimburse the Owner for the excess costs incurred in procuring similar goods or services. Contractor shall be liable for excess costs incurred by the Owner in procuring from third parties replacement Services or substitute Goods as cover.

C. Remedies Not Involving Termination

The Owner, its sole discretion may exercise the following remedies in addition to its other remedies, to-wit:

i. Suspend Performance

Suspend Contractor's performance pending necessary corrective action as specified by the Owner without entitling Contractor to adjustment in price/cost or schedule; and/or

ii. Withhold Payment

Withhold payment to the Contractor until corrections in services are satisfactorily completed and /or acceptable goods are provided; and/or

iii. Deny Payment

Deny payment for those services not performed and/or not provided and which due to circumstances caused by the Contractor cannot be performed, or if performed, would be of no value to the Owner; provided that any denial of payment must be reasonably related to the value of work or performance lost to the Owner; and/or

iv. Removal

Demand removal of Contractor's employees, agents, or subcontractors whom the Owner deems incompetent, careless, insubordinate, unsuitable, or otherwise unacceptable, or whose continued relation to this Contract is deemed to be contrary to the public interest or not in the Owner's best interest.

17. NOTICE and REPRESENTATIVES

A. Notice

All notices required to be given hereunder shall be hand delivered with receipt required or sent by certified or registered mail to such Party's principal representative at the address set forth below. In addition to hard-copy notice, notice also may be sent by e-mail to the e-mail addresses, if any, set forth below. Either Party may from time to time designate by written notice substitute addresses or persons to whom such notices shall be sent. Unless otherwise provided herein, all notices shall be effective upon receipt.

B. Representatives

The individuals listed below are the principal representatives of the respective Parties. With respect to the Owner's representative(s), they have authority to inspect and reject goods and services, approve invoices for payment, and act otherwise for the Owner, except with respect to the execution of modifications to or termination of this Contract. For the purposes of this Contract, the official representative(s) and addresses of the Parties are:

i. Owner:

Nancy Karas	John Weninger
Superintendent	Director of Maintenance/Facilities
East Grand School District	East Grand School District
299 County Road 611; P.O. Box 125	299 County Road 611; P.O. Box 125
Granby, CO 80446	Granby, CO 80446
Tel 970-887-2581	Tel 970-887-2581
Fax 970-887-2635	Fax 970-887-2635
Mobile	Mobile 970-531-7876
E-Mail nkaras@egsd.org	E-Mail jweninger@egsd.org

ii. Contractor:

Kevin Taylor	Kevin Cross
Account Executive	Performance Contracting Engineer
Honeywell Building Solutions	Honeywell Building Solutions
345 Inverness Drive South #240	300 Peterson Street
Englewood, CO 80112-5890	Fort Collins, CO 80524
Tel 303-792-1507	Tel 970-484-5955
Fax 303-792-1554	Fax 970-797-1572
Mobile 720-289-7033	Mobile 970-443-1560
E-Mail kevin.taylor@honeywell.com	E-Mail kevin.cross@honeywell.com
Gary Berngard	
Manager of Business Development	
Honeywell Building Solutions	
4224 Tamarack Court	
Boulder, CO 80304	
Tel 303-442-5700	
Fax 303-736-4414	
Mobile 303-589-5219	
E-Mail gary.berngard@honeywell.com	

18. GOVERNMENTAL IMMUNITY

Notwithstanding any other provision to the contrary, nothing herein constitutes a waiver, express or implied, of any of the immunities, rights, benefits, protection, or other provisions of the Colorado Governmental Immunity Act, §CRS 24-10-101, et seq., as amended. Liability for claims for injuries to persons or property arising from the negligence of the Owner, its departments, institutions, agencies, boards, officials, and employees is controlled and limited by the provisions of the Act and the risk management statutes, CRS §24-30-1501, et seq., as amended.

19. MISCELLANEOUS

A. Binding Effect

Unless otherwise provided herein, all provisions herein contained, including the benefits and burdens, shall extend to and be binding upon the Parties' respective heirs, legal representatives, successors, and assigns.

B. Modification

This Contract is subject to such modifications as may be required by changes in Federal or Colorado State law, or their implementing regulations. Any such required modification automatically shall be incorporated into and be part of this Contract on the effective date of such change, as if fully set forth herein. Except as specifically provided herein, no modification of this Contract shall be effective unless agreed to in writing by both Parties in an amendment to this Contract, properly executed and approved in accordance with Owner home rule statutes and fiscal rules.

C. Entire Understanding

This Contract represents the complete integration of all understandings between the Parties and all prior representations and understandings, oral or written, are merged herein. No prior or contemporaneous addition, deletion, or other amendment hereto shall have any force or affect whatsoever, unless embodied herein.

D. Severability

Provided this Contract can be executed and performance of the obligations of the Parties accomplished within its intent, the provisions hereof are severable and any provision that is declared invalid or becomes inoperable for any reason shall not affect the validity of any other provision hereof.

E. Counterparts

This Contract may be executed in multiple identical original counterparts, all of which shall constitute one agreement.

F. Waiver

Waiver of any breach of a term, provision, or requirement of this Contract any right or remedy hereunder, whether explicitly or by lack of enforcement, shall not be construed or deemed as a waiver of any subsequent breach of such term, provision or requirement, or of any other term, provision, or requirement.

G. Assignment-Novation

Except as otherwise specifically provided in **Exhibit A**, Contractor's rights and obligations hereunder are personal and may not be transferred, assigned or subcontracted, and novations shall not occur, without the prior, written consent of the Owner. Any attempt at assignment, transfer, subcontracting, or novations without such consent shall be void. All subcontracts/subcontractors approved by Contractor or the Owner shall be subject to the provisions hereof. Contractor shall be solely responsible for all aspects of subcontracting arrangements and performance. Contractor shall be solely responsible for all subcontracting arrangements, directions, and performance, including, but not limited to, delivery of Goods and performance of Services. Contractor shall require and ensure that each subcontractor assents in writing to all of the provisions hereof, including indemnifying the Owner as required under the Colorado Special Provisions, below herein.

H. Third Party Beneficiaries

Enforcement of this Contract and all rights and obligations hereunder are reserved solely to the Parties, and not to any third party. Any services or benefits which third parties receive as a result of this Contract are incidental to the Contract, and do not create any rights for such third parties.

I. Survival of Certain Contract Terms

Notwithstanding anything herein to the contrary, provisions of this Contract requiring continued performance, compliance, or effect after termination hereof, shall survive such termination and shall be enforceable by the Owner if Contractor fails to perform or comply as required.

J. Jurisdiction and Venue

All suits, actions, or proceedings related to this Contract shall be held in the State of Colorado and the Parties herby agree that venue shall be proper in the County of Otero.

K. Captions

The captions and headings in this Contract are for convenience of reference only, and shall not be used to interpret, define, or limit its provisions.

L. Rule of Contraction

While the Owner drafted this Contract, the Parties agree that this Contract shall not be strictly construed against the drafter.

M. Order of Precedence

The provisions of this Contract shall govern the relationship of the Owner and Contractor. In the event of conflicts or inconsistencies between this Contract and its exhibits and attachments, such conflicts or inconsistencies shall be resolved by reference to the documents in the following order of priority:

i. Colorado Special Provisions
ii. Exhibit A, then
iii. Exhibit B, then

iv. Exhibit C, then
v. Exhibit D.

20. COLORADO SPECIAL PROVISIONS

The Special Provisions apply to all Contracts except where noted in italics.

20.1. OWNERS APPROVAL. This contract shall not be deemed valid until it has been approved by the Owner or designee.

20.2. FUND AVAILABILITY. Financial obligations of the Owner payable after the current fiscal year are contingent upon funds for that purpose being appropriated, budgeted, and otherwise made available.

20.3. INDEMNIFICATION. Contractor shall indemnify, save, and hold harmless the Owner, its employees and agents, against any and all claims, damages, liability and court awards including costs, expenses, and attorney fees and related costs, incurred as a result of any act or omission by Contractor, or its employees, agents, subcontractors, or assignees pursuant to the terms of this contract.

~~[Applicable Only to Intergovernmental Contracts] No term or condition of this contract shall be construed or interpreted as a waiver, express or implied, of any of the immunities, rights, benefits, protection, or other provisions, of the Colorado Governmental Immunity Act, CRS §24-10-101 et seq., or the Federal Tort Claims Act, 28 U.S.C. 2671 et seq., as applicable, as now or hereafter amended.~~

20.4. INDEPENDENT CONTRACTOR. ~~4 CCR 801-2.~~ Contractor shall perform its duties hereunder as an independent contractor and not as an employee. Neither contractor nor any agent or employee of contractor shall be or shall be deemed to be an agent or employee of the Owner. Contractor shall pay when due all required employment taxes and income taxes and local head taxes on any monies paid by the Owner pursuant to this contract. Contractor acknowledges that contractor and its employees are not entitled to unemployment insurance benefits unless contractor or a third party provides such coverage and that the Owner does not pay for or otherwise provide such coverage. Contractor shall have no authorization, express or implied, to bind the Owner to any agreement, liability or understanding, except as expressly set forth herein. Contractor shall provide and keep in force workers' compensation (and provide proof of such insurance when requested by the Owner) and unemployment compensation insurance in the amounts required by law and shall be solely responsible for its acts and those of its employees and agents.

20.5. NON-DISCRIMINATION. Contractor agrees to comply with the letter and the spirit of all applicable Owner, State and federal laws respecting discrimination and unfair employment practices.

20.6. CHOICE OF LAW. The laws of the State of Colorado, and rules and regulations issued pursuant thereto, shall be applied in the interpretation, execution, and enforcement of this contract. Any provision of this contract, whether or not incorporated herein by reference, which provides for arbitration by any extra-judicial body or person or which is otherwise in conflict with said laws, rules, and regulations shall be considered null and void. Nothing contained in any provision incorporated herein by reference which purports to negate this or any other special provision in whole or in part shall be valid or enforceable or available in any action at law, whether by way of complaint, defense, or otherwise. Any provision rendered null and void by the operation of this provision will not invalidate the remainder of this contract, to the extent that this contract is capable of execution. At all times during the performance of this contract, Contractor shall strictly adhere to all applicable federal and State laws, rules, and regulations that have been or may hereafter be established.

~~**20.7. VENDOR OFFSET. CRS §§24-30-202 (1) and 24-30-202.4. [Not Applicable to Intergovernmental Agreements]** The State Controller may withhold payment of certain debts owed to State agencies under the State's vendor offset intercept system for: (a) unpaid child support debts or child support arrearages; (b) unpaid balances of tax, accrued interest, or other charges specified in CRS §39-21-101, et. seq.; (c) unpaid loans due to the Student Loan Division of the Department of Higher Education; (d) amounts required to be paid to the Unemployment Compensation Fund; and (e) other unpaid debts certified by the State Controller as owing to the State as a result of final agency determination or judicial action.~~

20.8. SOFTWARE PIRACY PROHIBITION. Governor's Executive Order D 002 00. No Owner or other public funds payable under this contract shall be used for the acquisition, operation, or maintenance of computer software in violation of federal copyright laws or applicable licensing restrictions. Contractor hereby certifies that, for the term of this contract and any extensions, Contractor has in place appropriate systems and controls to prevent such improper use of public funds. If the Owner determines that Contractor is in violation of this

paragraph, the Owner may exercise any remedy available at law or equity or under this contract, including, without limitation, immediate termination of this contract and any remedy consistent with federal copyright laws or applicable licensing restrictions.

20.9. EMPLOYEE FINANCIAL INTEREST. CRS §24-18-201 and §24-50-507. The signatories aver that to their knowledge, no employee of the Owner has any personal or beneficial interest whatsoever in the service or property described in this contract.

20.10. PUBLIC CONTRACTS FOR SERVICES. CRS §8-17.5-101.-[Not Applicable to agreements relating to the offer, issuance, or sale of securities, investment advisory services or fund management services, sponsored projects, intergovernmental agreements, or information technology services or products and services] Contractor certifies, warrants, and agrees that it does not knowingly employ or contract with an illegal alien who will perform work under this contract and will confirm the employment eligibility of all employees who are newly hired for employment in the United States to perform work under this contract, through participation in the E-Verify Program or the Department program established pursuant to CRS §8-17.5-102(5)(c), Contractor shall not knowingly employ or contract with an illegal alien to perform work under this contract or enter into a contract with a subcontractor that fails to certify to Contractor that the subcontractor shall not knowingly employ or contract with an illegal alien to perform work under this contract. Contractor (a) shall not use E-Verify Program or Department program procedures to undertake pre-employment screening of job applicants while this contract is being performed, (b) shall notify the subcontractor and the Owner within three days if Contractor has actual knowledge that a subcontractor is employing or contracting with an illegal alien for work under this contract, (c) shall terminate the subcontract if a subcontractor does not stop employing or contracting with the illegal alien within three days of receiving the notice, and (d) shall comply with reasonable requests made in the course of an investigation, undertaken pursuant to CRS §8-17.5-102(5), by the Colorado Department of Labor and Employment. If Contractor participates in the Department program, Contractor shall deliver to the Owner or political subdivision a written, notarized affirmation, affirming that Contractor has examined the legal work status of such employee, and comply with all of the other requirements of the Department program. If Contractor fails to comply with any requirement of this provision or CRS §8-17.5-101 et seq., the contracting State agency, institution of higher education or political subdivision may terminate this contract for breach and, if so terminated, Contractor shall be liable for damages.

20.11. PUBLIC CONTRACTS WITH NATURAL PERSONS. CRS §24-76.5-101. Contractor, if a natural person eighteen (18) years of age or older, hereby swears and affirms under penalty of perjury that he or she (a) is a citizen or otherwise lawfully present in the United States pursuant to federal law, (b) shall comply with the provisions of CRS §24-76.5-101 et seq., and (c) has produced one form of identification required by CRS §24-76.5-103 prior to the effective date of this contract.

This document master template was last revised 5/13/08 by the Colorado Governor's Energy Office/GEO. The following terms and conditions have been added to this agreement 3/9/09 by Honeywell for specific use for East Grand School District.

21. LIMITATION OF LIABILITY. In no event will Contractor be liable for any special, incidental, indirect, speculative, remote, consequential, punitive or exemplary damages, whether arising out of or as a result of breach of contract, warranty, tort, (including negligence), strict liability, mold, moisture, indoor air quality, or otherwise, arising, related to, or in connection with the services, equipment, materials, or any goods provided hereunder.

22. REPORT DISCLAIMER. In the event Owner and Contractor do not execute an Energy Performance Contract for work included in the Audit Report, Contractor shall have no responsibility to Owner or others for any use of the Audit Report, or any documents, information or services provided by Contractor.

THE REST OF THIS PAGE INTENTIONALLY LEFT BLANK

THE PARTIES HERETO HAVE EXECUTED THIS CONTRACT

*** Persons signing for Contractor hereby swear and affirm that they are authorized to act on Contractor's behalf and acknowledge that the Owner is relying on their representations to that effect.**

CONTRACTOR: Honeywell Building Solutions
Name: Gary Berngard
Title: Manager of Business Development

Signature

Date: 4/1/09

OWNER: East Grand School District
Name: ~~Nancy Karas~~ Tom Sifers
Title: ~~Superintendent~~ President

Signature

Date: 3-31-2009

Exhibit A to Technical Energy Audit & Project Proposal Contract
Scope of Work
East Grand School District

1) **Data and Information**. Collect data and background information from Owner concerning facility operation and energy use for the most recent three years from the effective date of this Contract as follows:
   - **a.** Building square footage.
   - **b.** Construction data of buildings and major additions including building envelope.
   - **c.** Utility company invoices.
   - **d.** Occupancy and usage information.
   - **e.** Description of all energy-consuming or energy-saving equipment used on the premises.
   - **f.** Description of energy management procedures utilized on the premises.
   - **g.** Description of any energy-related improvements made or currently being implemented.
   - **h.** Description of any changes in the structure of the facility or energy-using or water-using equipment.
   - **i.** Description of future plans regarding building modifications or equipment modifications and replacements.
   - **j.** Drawings, as available (may include mechanical, plumbing, electrical, building automation and temperature controls, structural, architectural, modifications and remodels).
   - **k.** Original construction submittals and factory data (specifications, pump curves, etc.), as available.
   - **l.** Operating engineer logs, maintenance work orders, etc., as available.
   - **m.** Records of maintenance expenditures on energy-using equipment, including service contracts.
   - **n.** Prior energy audits or studies, if any.
2) **Identify Potential Measures**
   - **a.** Interview individuals with knowledge of the facility such as the facility manager, maintenance staff, subcontractors and occupants of each building regarding:
     - **i.** Facility operation, including energy management procedures.
     - **ii.** Equipment maintenance problems.
     - **iii.** Comfort problems and requirements.
     - **iv.** Equipment reliability.
     - **v.** Projected equipment needs.
     - **vi.** Occupancy and use schedules for the facility and specific equipment.
     - **vii.** Facility improvements – past, planned and desired.
   - **b.** Survey major energy-using equipment, including, but not limited to, lighting (indoor and outdoor), heating and heat distribution systems, cooling systems and related equipment, automatic temperature control systems and equipment, air distribution systems and equipment, outdoor ventilation systems and equipment; exhaust systems and equipment; hot water systems, electric motors, transmission and drive systems, special systems such as kitchen/dining equipment and swimming pools, renewable energy systems, other energy using systems, water consuming systems, such as restroom fixtures, water fountains, and irrigation systems.
   - **c.** Perform "late-night" surveys outside of normal business hours or on weekends to confirm building system and occupancy schedules, if deemed necessary.
   - **d.** Develop a preliminary list of potential energy and water saving measures. Consider the following for each system:
     - **i.** Comfort and maintenance problems.
     - **ii.** Energy use, loads, proper sizing, efficiencies and hours of operation.

iii. Current operating condition.
iv. Remaining useful life.
v. Feasibility of system replacement.
vi. Hazardous materials and other environmental concerns.
vii. Owner's future plans for equipment replacement or building renovations.
viii. Facility operation and maintenance procedures that could be affected.
ix. Capability to monitor energy performance and verify savings.

3) **Base-Year Consumption**. Establish base-year consumption and reconcile with end-use consumption estimates.
   - **a.** Establish appropriate base year consumption by examining utility bills for the past three years for electricity, gas, propane, steam, water, and any other applicable utilities. Present base year consumption in terms of energy units (kWh, kW, ccf, Therms, gallons, or other units used in bills), in terms of energy units per square foot, in terms of dollars, and in terms of dollars per square foot. Describe the process used to determine the base year (averaging, selecting most representative contiguous 12 months, removal of anomalies, or other statistical or weather-normalized method). Consult with facility personnel to account for any anomalous schedule or operating conditions on billings that could skew the base year representation. Contractor shall account for periods of time when equipment was broken or malfunctioning in calculating the base year.
   - **b.** Estimate loading, usage and/or hours of operation for all major end uses of total facility consumption including, but not limited to: lighting, heating, cooling, motors (fans, pumps, and other pertinent), plug loads, and other major energy and water using equipment. Where loading or usage are highly uncertain (including variable loads such as cooling), Contractor shall use its best judgment, spot measurements or short-term monitoring. Contractor should not assume that equipment run hours equal the operating hours of the building(s) or facility staff estimates.
   - **c.** Reconcile annual end-use estimated consumption with the annual base year consumption. This reconciliation shall place reasonable "real-world" limits on potential savings. Propose adjustments to the baseline for energy and water saving measures that shall be implemented in the future.
   - **d.** For facilities constructed and occupied prior to July 1, 2005, establish the actual FY 2005/2006 baseline utility consumption and compare to the EPC base year consumption. Document, analyze, and defend all variances between the EPC base year consumption values and the actual FY 2005/2006 facility baseline utility consumption.

4) **Preliminary Analysis.** Develop a preliminary analysis of potential energy and water saving measures.
   - **a.** List all potential opportunities, whether cost-effective or not. Consider technologies in a comprehensive approach including, but not limited to: lighting and daylighting systems, heating/ventilating/air conditioning equipment and distribution systems, controls systems, building envelope, motors, kitchen equipment, pools, renewable energy systems, other special equipment, irrigation systems, and water saving devices.
   - **b.** Identify measures which appear likely to be cost effective and therefore warrant detailed analysis.
   - **c.** For each measure, prepare a preliminary estimate of energy or water cost savings including description of analysis methodology, supporting calculations and assumptions used to estimate savings.

5) **Preliminary Meeting**. Meet with Owner to present preliminary analysis prior to complete analysis. Describe how the projected project economics meet the Owner's terms for completing the Technical Energy Audit and Proposal Contract. Discuss assessment of energy use, savings

potential, project opportunities, and potential for developing an energy performance contract. Develop a list of recommended measures for further analysis. The Owner shall at its discretion, have the option to reject any presented calculations of savings, potential savings allowed, or project recommendations.

6) **Savings and Cost Analysis**. Analyze savings and costs for each mutually agreed to energy and water saving measure and any mutually agreed to capital improvement measures.
   - **a.** Follow the methodology of the American Society of Heating, Refrigeration, and Air Conditioning Engineers (ASHRAE) or other nationally-recognized authorities following the engineering principle(s) identified for each retrofit option.
   - **b.** Utilize assumptions, projections and baselines which best represent the true value of future energy or operational savings. Include accurate marginal costs for each unit of savings at the time the audit is performed, documentation of material and labor cost savings, adjustments to the baseline to reflect current conditions at the facility, calculations which account for the interactive effects of the recommended measures.
   - **c.** Use best judgment regarding the employment of instrumentation and recording durations so as to achieve an accurate and faithful characterization of energy use.
   - **d.** Use markups and fees stated in contract in all cost estimates.
   - **e.** Develop a preliminary measurement and verification plan for each measure.
   - **f.** Follow additional guidelines for analysis and report preparation given below.
   - **g.** ~~Include cost to provide services and complete application for ENERGY STAR Label, LEED-EB certification for Existing Buildings, or other certification.~~
7) **Draft Audit Report**. Prepare a draft Technical Energy Audit Report. The report provides an engineering and economic basis for negotiating a potential Energy Performance Contract between the Owner and the Contractor. The report shall include:
   - **a.** Overview.
     - **i.** Contact information.
     - **ii.** Summary table of recommended energy and water saving measures, with itemization for each measure of total design and construction cost, annual maintenance costs, the first year cost avoidance (in dollars and energy/water units), simple payback and equipment service life.
     - **iii.** Summary of annual energy and water use by fuel type and costs of existing or base year condition.
     - **iv.** Calculation of cost savings expected if all recommended measures are implemented and total percentage savings of total facility energy cost.
     - **v.** Description of the existing facility, mechanical and electrical systems.
     - **vi.** Summary description of measures, including estimated costs and savings for each as detailed above.
     - **vii.** Discussion of measures considered but not investigated in detail.
     - **viii.** Conclusions and recommendations.
   - **b.** Base year energy use.
     - **i.** Description and itemization of current billing rates, including schedules and riders.
     - **ii.** Summary of all utility bills for all fuel types and water.
     - **iii.** Identification and definition of base year consumption and description of how established.
     - **iv.** Reconciliation of estimated end use consumption (i.e. lighting, cooling, heating, fans, plug loads, etc) with base year (include discussion of any unusual findings)
   - **c.** Full description of each energy and water saving measure including:
     - **i.** Written description of:

A. Existing conditions.
B. Description of equipment to be installed and how it shall function.
C. Include discussion of facility operations and maintenance procedures that shall be affected by installation/implementation.
D. Present the plan for installing or implementing the recommendation.

ii. Savings calculations:

A. Base year energy use and cost.
B. Post-retrofit energy use and cost.
C. Savings estimates including analysis methodology, supporting calculations and assumptions used.
D. Annual savings estimates. The cost savings for all energy saving measures must be determined for each year during the contract period. Savings must be able to be achieved each year (cannot report average annual savings over the term of the contract).
E. Savings must be limited to savings allowed by the Owner as described above.
F. Percent cost-avoidance projected.
G. Description and calculations for any proposed rate changes.
H. Explanation of how savings interactions between retrofit options are accounted for in calculations.
I. Operation and maintenance savings, including detailed calculations and description. Ensure that maintenance savings are only applied in the applicable years and only during the lifetime of the particular equipment.
J. If computer simulation is used, include a short description and state key input data. If requested by Owner, access shall be provided to the program and all assumptions and inputs used, and/or printouts shall be provided of all input files and important output files and included in the Technical Energy Audit with documentation that explains how the final savings figures are derived from the simulation program output printouts.
K. If manual calculations are employed, formulas, assumptions and key data shall be stated.
L. Conclusions, observations, caveats.

iii. Cost estimate – Include all information required under CRS §24-30-2002 as well as a detailed scope of the construction work suitable for cost estimating. Include all anticipated costs associated with installation and implementation. Provide preliminary specifications for major mechanical components as well as detailed lighting and water fixture counts. The following shall also be included:

A. Engineering/design costs.
B. Contractor/vendor estimates for labor, materials, and equipment; include special provisions, overtime, and all other appropriate items, as needed to accomplish the work with minimum disruption to the operations of the facilities.
C. Permit costs.
D. Construction management fees.
E. Environmental costs or benefits (disposal, avoided emissions, handling of hazardous materials, and any other related costs).
F. Note that all markups and fees stated in **Exhibit D** to the Technical Energy Audit and Project Proposal Contract (TEAPP), to which this Exhibit A is attached, shall be used in the cost estimates, unless otherwise documented and justified due to change in scope or size of project or other unforeseen circumstances.

G. Conclusions, observations, caveats.

H. Other cost categories as defined above under “markups” in Contract.

d. Miscellaneous:

- **i.** Estimate of average useful service life of equipment.
- **ii.** Preliminary commissioning plan.
- **iii.** Preliminary measurement and verification plan, following the International Performance Measurement and Verification Protocol most current International Performance Monitoring and Verification Protocol (IPMVP), explaining how savings from each measure is to be measured and verified.
- **iv.** Discussion of impacts that facility would incur after contract ends. Consider operation and maintenance impacts, staffing impacts, budget impacts, etc., and identify who is responsible for maintenance.
- **v.** Compatibility with existing systems.

8) **Post-Audit Meeting**. Meet with Owner to review the recommendations, savings calculations and impact of the measures on the operations of the facility. Describe how the projected project economics meet the Owner’s terms for completing the Technical Energy Audit and Performance Contract Proposal. Discuss the willingness and capability of Owner to make capital contributions to the project to improve the economics of the overall project. Revise Audit as directed by Owner.

9) **Complete and Present Final Technical Energy Audit Report**. Deliver final audit report to Owner for approval. Execute Exhibit B to the TEAPP.

10) **Proposal**. Prepare an Energy Performance Contract Proposal using the State of Colorado’s Energy Performance Contract documents. In anticipation of Contractor and Owner entering into an Energy Performance Contract to design, install, and monitor the energy and water saving measures proposed in the Technical Energy Audit Report, Contractor shall prepare a proposal to be incorporated in an Energy Performance contract that includes the following:

a. Project Cost is the maximum not to exceed amount Owner shall pay for the project and Contractor’s services. Costs must be consistent with mutually agreed to markups and fees established in **Exhibit D** to the TEAPP. Costs may include but are not limited to: engineering, designing, packaging, procuring, installing (from Technical Energy Audit Report results); performance/payment bond costs; construction management fees; commissioning costs; maintenance fees; monitoring fees; training fees; and overhead and profit.

b. Include a List of Services that shall be provided as related to each cost.

c. Expected term of the Energy Performance Contract.

d. Expected utility rate forecast (escalation or decline) based on historical trends, utility provider rate forecasts, economic forces of supply and demand (global, national, local or regional), natural resource availability, technology, utility capital investment, and environmental requirements. (GEO and/or the Owner shall be consulted on the appropriate fuel price escalation factors for all projects.)

e. Description of how the project shall be financed including available interest rates and financing terms, based on interest rates likely available to Owner at this time, and based on a 60-day and 90-day lock option.

f. Explanation of how the savings shall be calculated and adjusted due to weather (such as heating and cooling degree days), occupancy or other factors. Monitoring and verification methods must be consistent with the most current IPMVP.

g. Analysis of annual cash flow for Owner during the contract term.

NOTES:
The energy audit will follow parallel paths for development of two separate projects/packages for the District's consideration – building and District-wide ECMs and "ECM 11.1 Wind Turbine Renewable Energy Plant".

The audit fee for the building and District-wide ECMs is $31,920 and will be waived in its entirety if Honeywell is unable to develop a scope under this TEAPP that meets the District's requirement for a revenue neutral self-funded cash flow. "Revenue neutral self-funded cash flow" is defined as follows:

1. 100% of the installed capital costs to the District will be financed through a 3rd party tax-exempt municipal lease over a maximum 20 year term. Installed capital cost shall be net of available rebates, grants and other 3rd party capital contributions used to buy down the up-front capital cost to the District.
2. Honeywell guarantees for each year of the lease that the combined total of energy savings and avoided operations and maintenance costs will be greater than or equal to the combined total cost to the District from the tax exempt lease, measurement and verification services and wind turbine maintenance and repairs. Note that this may require a back-end loaded lease arrangement with higher lease payments in later years to ensure a break-even cash flow for all years of the agreement.

The District will have adequate information from the audit and deliverable for building and District-wide ECMs to enter into an Energy Performance Contract/EPC with Honeywell in a May/June time-frame, allowing for substantive construction activities to be accomplished this summer.

The audit for "ECM 11.1 Wind Turbine Renewable Energy Plant" will require a 2-step process for assessment and design under the TEAPP. The first step, or level 1 wind resource study, will identify budgetary installed cost and expected electrical kWh and kW production output based on analysis of available wind data in Grand County. The cost for this portion of the audit is $3,750 and is included in the audit fee amount of $35,670 listed in section "***7 Payments to Contractor***" in the TEAPP Contract. This $3,750 fee will be waived in its entirety if Honeywell is unable to develop a scope under this TEAPP that meets the District's requirement for a revenue neutral self-funded cash flow as described above.

If the results of the level 1 wind study are favorable to the District, then the District, subject to Board approval, intends to authorize Honeywell to proceed to a level 2 wind resource study. Information deliverables from this level 2 study will include firm/fixed pricing for the turbine installation, a production output guarantee and a revenue neutral cash flow model as described above. We will identify potential retail net metering credits from Mountain Parks Electric, wholesale net metering payments and rebates from Tri-State Generation and Transmission, and Federal Stimulus dollars from the Governor's Energy Office/GEO. The cost for this level 2 study is $67,500 and includes detailed engineering evaluation and design, the installation of an anemometer for a minimum 2-month wind test, site selection and competitive bidding for equipment and installation. This $67,500 fee, as well as the $3,750 level 1 audit fee, will be waived in its entirety if Honeywell is unable to develop a scope under this TEAPP that meets the District's requirement for a revenue neutral self-funded cash flow as described above.

The District will have adequate information from the level 2 wind study to authorize a change order to the aforementioned Energy Performance Contract/EPC with Honeywell in a June/July time-frame.

The following energy conservation and facility improvements measures (ECMs and FIMs) will be evaluated by Honeywell under the TEAPP:

Building	ECM ID	ECM Name
Middle Park High School	3.1	Control system upgrades
	5.1	Lighting fixture retrofit
	5.2	Lighting controls retrofit
	6.1	Window and door weatherization
East Grand Middle School	3.1	Control system upgrades
	5.1	Lighting fixture retrofit
	5.2	Lighting controls retrofit
	8.1	Domestic cold water/DCW pump replacement
Fraser Valley Elementary School	1.1	Boiler plant upgrades
	3.1	Control system upgrades
	4.1	Unit ventilator replacement
	5.1	Lighting fixture retrofit
	5.2	Lighting controls retrofit
	6.1	Window and door weatherization
	12.1	Uninterruptible power supply replacement
Granby Elementary School	3.1	Control system upgrades
	4.2	Heat recovery unit/HRU system installation for gym ventilation
	5.1	Lighting fixture retrofit
	5.2	Lighting controls retrofit
	6.1	Window and door weatherization
Grand Lake Elementary School	1.1	Boiler plant upgrades
	3.1	Control system upgrades
	4.1	Unit ventilator replacement
	5.1	Lighting fixture retrofit
	5.2	Lighting controls retrofit
	6.1	Window and door weatherization
	12.1	Emergency power supply replacement
Indian Peaks Charter School	3.1	Control system upgrades
	5.1	Lighting fixture retrofit
	6.1	Window and door weatherization
District Office	3.1	Control system upgrades
	4.2	Install heat recovery unit to serve the warehouse.
	4.3	Furnace installation in east office space
	4.4	Furnace replacement
	4.5	Replace existing unit heaters serving warehouse with gas-fired radiant heaters.
	5.1	Lighting fixture retrofit
	6.1	Window and door weatherization
Transportation Facility	3.1	Control system upgrades
	5.1	Lighting fixture retrofit
	5.2	Lighting controls retrofit

Building	ECM ID	ECM Name
District-wide	3.2	Fire and security system integration and field device upgrades/replacements.
	3.3	Internet-based notification service
	11.1	Wind turbine renewable energy plant installation

In the event that the overall project outlined above has a net positive cash flow over the finance and guarantee term, the District may ask Honeywell to evaluate additional non-savings based facility improvement measures/FIMs as a change order to the TEAPP. Any measures selected by the District for implementation from this FIM list may then be added as a change order to the base EPC.

The District and Honeywell will negotiate in good faith an addition to the audit fee in the not to exceed amount of $24,000 to cover assessment, engineering and project development for the following FIMs:

Building	FIM Name	Facility Improvement Measure/FIM Description
Middle Park High School	Kitchen equipment upgrades	Replace existing electric kitchen equipment with gas-fired equipment as appropriate. This retrofit will result in improved equipment reliability and lower energy and demand costs.
	Kitchen waste heat recovery	Add waste heat recovery system to kitchen range hood for energy savings.
	Gymnasium destratification fans	Will allow downdraft from warmer at ceiling to floor level for energy savings.
East Grand Middle School	Replace store-front doors in front of building.	Store-front doors need to be replaced.
	Relocate front entrance emergency door	Not currently in use because of improper location and original installation problems.
	Emergency exit snow diverting addition to roof line (“cricket”)	Snow slides off roof into emergency exit area – egress & safety issue. Add snow diverting system at roof-line.
Fraser Valley Elementary School	Replace MDF roof	Middle addition roof is MDF & approximately 10 years. Consider changing to fiber-tight welded seam.
	Modify heat tape to roof drains to mitigate ice-build-up problems	Modify heat tape to roof drains to mitigate ice-build-up problems
	Add vestibule to doors on west side	Doors used more frequently now that parking added. Excessive heat/energy loss and infiltration during use.
	Replace east door vestibule heater repair/ replacement	Current heater does not work.
	Replace pre-school playground surface	Investigate viability of GOCO grant for recycled playground surface.
Granby Elementary School	Pre-school playground surface	Replace surface with recycled material. Evaluate opportunity for GOCO grant for recycled playground surface.

Building	FIM Name	Facility Improvement Measure/FIM Description
	Playground equipment overhaul	Repair/replace end-of-life playground equipment. Evaluate opportunity for GOCO grant $'s.
Grand Lake Elementary School	Hot/cold complaints	Air either blows hot or cold per office secretary served by AHUs. Evaluate & repair same.
	Monitor sewer lift station	Add remote EMS monitoring of sewer lift station
	Reconfigure front entrance access/egress	Require that visitors pass through office for security purposes
District Office	Window replacement	Replace existing windows. Note that current double pane air gap is too small to allow for actual energy savings. Also leakage around windows.
	Extend roof eave on north side of building	Extend roof eave on north side of building to reduce drifting & siding damage
	Septic system replacement	Fiberglass tank at end of useful life.
	Spray-on roofing material	Evaluate application of Honeywell specialty chemicals to top of roof to eliminate leaks.

This page is intentionally blank.

Exhibit B to Technical Energy Audit & Project Proposal Contract
Notice of Acceptance of Technical Energy Audit Report
East Grand School District

Notice of Acceptance

Date of Notice _____

Subject to the Parties entering into a new contract under §6(A) of the Contract for Technical Energy Audit and Project Proposal, which was signed by the Owner on _____, notice is hereby given that the Owner accepts the Contractor's proposal .

Accepted by: **East Grand School District**
Name: _____
Title: _____
Signature: _____
Date: _____

This page is intentionally blank.

Exhibit C to Technical Energy Audit & Project Proposal Contract
Buildings Included in Scope of Work
East Grand School District

Customer Name: East Grand School District

The following table lists the buildings included in the Technical Energy Audit (TEA) Scope of Work:

Facility	Sq. Ft.	$'s/ Sq. Ft.	Extended	Include ?	Extended
Transportation	20,500	$ 0.09	$ 1,845	y	$ 1,845
East Grand MS	62,500	$ 0.09	$ 5,625	y	$ 5,625
District Ofc	12,700	$ 0.09	$ 1,143	y	$ 1,143
Fraser Valley ES	52,910	$ 0.09	$ 4,762	y	$ 4,762
Granby ES	57,279	$ 0.09	$ 5,155	y	$ 5,155
Grand Lake ES	19,000	$ 0.09	$ 1,710	y	$ 1,710
Indian Peaks CS	9,000	$ 0.09	$ 810	y	$ 810
Middle Park HS	120,781	$ 0.09	$ 10,870	y	$ 10,870
	354,670		**$ 31,920**		**$ 31,920**

We will also be conducting a wind energy feasibility study for a wind turbine energy plant to be located adjacent to the District Transportation building. Following is a breakdown of the audit costs for this 2-part wind study, as well as possible future costs for development of measures not selected by the District for inclusion in the TEAPP at this time:

Category	Fee Basis	Include?	Extended	Comments	
1. Wind Energy					
a. Level 1 study	$ 3,750	y	$ 3,750	Included in audit parachute fee of	$ 35,670
b. Level 2 study	$ 67,500	n	N/A		
1) Anemometer installation & study					
3) Engineering assessment, design, site selection & competitive bidding					
2. Misc infrastructure improvements					
Scope to be determined	$ 24,000	n	N/A		

TOTAL COST OF TEA: 35,670

NOTES:

The energy audit will follow parallel paths for development of two separate projects/packages for the District's consideration – building and District-wide ECMs and "ECM 11.1 Wind Turbine Renewable Energy Plant".

The audit fee for the building and District-wide ECMs is $31,920 and will be waived in its entirety if Honeywell is unable to develop a scope under this TEAPP that meets the District's requirement for a revenue neutral self-funded cash flow. "Revenue neutral self-funded cash flow" is defined as follows:

1. 100% of the installed capital costs to the District will be financed through a 3rd party tax-exempt municipal lease over a maximum 20 year term. Installed capital cost shall be net of available rebates, grants and other 3rd party capital contributions used to buy down the up-front capital cost to the District.
2. Honeywell guarantees for each year of the lease that the combined total of energy savings and avoided operations and maintenance costs will be greater than or equal to the combined total cost to the District from the tax exempt lease, measurement and verification services and wind turbine maintenance and repairs. Note that this may require a back-end loaded lease arrangement with higher lease payments in later years to ensure a break-even cash flow for all years of the agreement.

The District will have adequate information from the audit and deliverable for building and District-wide ECMs to enter into an Energy Performance Contract/EPC with Honeywell in a May/June time-frame, allowing for substantive construction activities to be accomplished this summer.

The audit for "ECM 11.1 Wind Turbine Renewable Energy Plant" will require a 2-step process for assessment and design under the TEAPP. The first step, or level 1 wind resource study, will identify budgetary installed cost and expected electrical kWh and kW production output based on analysis of available wind data in Grand County. The cost for this portion of the audit is $3,750 and is included in the audit fee amount of $35,670 listed in section "***7 Payments to Contractor***" in the TEAPP Contract. This $3,750 fee will be waived in its entirety if Honeywell is unable to develop a scope under this TEAPP that meets the District's requirement for a revenue neutral self-funded cash flow as described above.

If the results of the level 1 wind study are favorable to the District, then the District, subject to Board approval, intends to authorize Honeywell to proceed to a level 2 wind resource study. Information deliverables from this level 2 study will include firm/fixed pricing for the turbine installation, a production output guarantee and a revenue neutral cash flow model as described above. We will identify potential retail net metering credits from Mountain Parks Electric, wholesale net metering payments and rebates from Tri-State Generation and Transmission, and Federal Stimulus dollars from the Governor's Energy Office/GEO. The cost for this level 2 study is $67,500 and includes detailed engineering evaluation and design, the installation of an anemometer for a minimum 2-month wind test, site selection and competitive bidding for equipment and installation. This $67,500 fee, as well as the $3,750 level 1 audit fee, will be waived in its entirety if Honeywell is unable to develop a scope under this TEAPP that meets the District's requirement for a revenue neutral self-funded cash flow as described above.

The District will have adequate information from the level 2 wind study to authorize a change order to the aforementioned Energy Performance Contract/EPC with Honeywell in a June/July time-frame.

The following energy conservation and facility improvements measures (ECMs and FIMs) will be evaluated by Honeywell under the TEAPP:

Building	ECM ID	ECM Name
Middle Park High School	3.1	Control system upgrades
	5.1	Lighting fixture retrofit
	5.2	Lighting controls retrofit
	6.1	Window and door weatherization
East Grand Middle School	3.1	Control system upgrades
	5.1	Lighting fixture retrofit
	5.2	Lighting controls retrofit
	8.1	Domestic cold water/DCW pump replacement
Fraser Valley Elementary School	1.1	Boiler plant upgrades
	3.1	Control system upgrades
	4.1	Unit ventilator replacement
	5.1	Lighting fixture retrofit
	5.2	Lighting controls retrofit
	6.1	Window and door weatherization
	12.1	Uninterruptible power supply replacement
Granby Elementary School	3.1	Control system upgrades
	4.2	Heat recovery unit/HRU system installation for gym ventilation
	5.1	Lighting fixture retrofit
	5.2	Lighting controls retrofit
	6.1	Window and door weatherization
Grand Lake Elementary School	1.1	Boiler plant upgrades
	3.1	Control system upgrades
	4.1	Unit ventilator replacement
	5.1	Lighting fixture retrofit
	5.2	Lighting controls retrofit
	6.1	Window and door weatherization
	12.1	Emergency power supply replacement
Indian Peaks Charter School	3.1	Control system upgrades
	5.1	Lighting fixture retrofit
	6.1	Window and door weatherization
District Office	3.1	Control system upgrades
	4.2	Install heat recovery unit to serve the warehouse.
	4.3	Furnace installation in east office space
	4.4	Furnace replacement
	4.5	Replace existing unit heaters serving warehouse with gas-fired radiant heaters.
	5.1	Lighting fixture retrofit
	6.1	Window and door weatherization
Transportation Facility	3.1	Control system upgrades
	5.1	Lighting fixture retrofit
	5.2	Lighting controls retrofit

Building	ECM ID	ECM Name
District-wide	3.2	Fire and security system integration and field device upgrades/replacements.
	3.3	Internet-based notification service
	11.1	Wind turbine renewable energy plant installation

In the event that the overall project outlined above has a net positive cash flow over the finance and guarantee term, the District may ask Honeywell to evaluate additional non-savings based facility improvement measures/FIMs as a change order to the TEAPP. Any measures selected by the District for implementation from this FIM list may then be added as a change order to the base EPC.

The District and Honeywell will negotiate in good faith an addition to the audit fee in the not to exceed amount of $24,000 to cover assessment, engineering and project development for the following FIMs:

Building	FIM Name	Facility Improvement Measure/FIM Description
Middle Park High School	Kitchen equipment upgrades	Replace existing electric kitchen equipment with gas-fired equipment as appropriate. This retrofit will result in improved equipment reliability and lower energy and demand costs.
	Kitchen waste heat recovery	Add waste heat recovery system to kitchen range hood for energy savings.
	Gymnasium destratification fans	Will allow downdraft from warmer at ceiling to floor level for energy savings.
East Grand Middle School	Replace store-front doors in front of building.	Store-front doors need to be replaced.
	Relocate front entrance emergency door	Not currently in use because of improper location and original installation problems.
	Emergency exit snow diverting addition to roof line (“cricket”)	Snow slides off roof into emergency exit area – egress & safety issue. Add snow diverting system at roof-line.
Fraser Valley Elementary School	Replace MDF roof	Middle addition roof is MDF & approximately 10 years. Consider changing to fiber-tight welded seam.
	Modify heat tape to roof drains to mitigate ice-build-up problems	Modify heat tape to roof drains to mitigate ice-build-up problems
	Add vestibule to doors on west side	Doors used more frequently now that parking added. Excessive heat/energy loss and infiltration during use.
	Replace east door vestibule heater repair/ replacement	Current heater does not work.
	Replace pre-school playground surface	Investigate viability of GOCO grant for recycled playground surface.
Granby Elementary School	Pre-school playground surface	Replace surface with recycled material. Evaluate opportunity for GOCO grant for recycled playground surface.

Building	FIM Name	Facility Improvement Measure/FIM Description
	Playground equipment overhaul	Repair/replace end-of-life playground equipment. Evaluate opportunity for GOCO grant $'s.
Grand Lake Elementary School	Hot/cold complaints	Air either blows hot or cold per office secretary served by AHUs. Evaluate & repair same.
	Monitor sewer lift station	Add remote EMS monitoring of sewer lift station
	Reconfigure front entrance access/egress	Require that visitors pass through office for security purposes
District Office	Window replacement	Replace existing windows. Note that current double pane air gap is too small to allow for actual energy savings. Also leakage around windows.
	Extend roof eave on north side of building	Extend roof eave on north side of building to reduce drifting & siding damage
	Septic system replacement	Fiberglass tank at end of useful life.
	Spray-on roofing material	Evaluate application of Honeywell specialty chemicals to top of roof to eliminate leaks.

This page is intentionally blank.

Exhibit D to Technical Energy Audit & Project Proposal Contract
Project Cost and Pricing Elements
East Grand School District

COST AND PRICING

Maximum rates were established for ESCOs participating in the GEO/EPC program. Below are rates agreed to for this specific project that are generally less than the maximum established rates, based on the size, scope and location of the East Grand School District project.

Markups

Markups shall be calculated as a percentage added to the base cost for the project. The use of margins in lieu of markups is not acceptable. Use only the categories shown. Ranges for markups are not acceptable.

Category Of Mark-Up	Mark-Up Application	% Mark-Up
Overhead	Applied to all our direct costs of delivering goods & services to East Grand School District. Cost categories are as outlined below.	12%
Profit	Applied to all our direct costs of delivering goods & services to East Grand School District. Cost categories are as outlined below.	10%
Labor – Internal	Overhead + profit are applied at the rates listed to our direct labor costs, including salary and benefits	Cost +12% Overhead (“O/H”) + 10% Profit
Equipment Purchased	Overhead + profit are applied at the rates listed to our direct invoice cost, including shipping and handling to job site.	Cost + 12% O/H + 10% Profit
Materials Purchased	Overhead + profit are applied at the rates listed to our direct invoice cost, including shipping and handling to job site.	Cost + 12% O/H + 10% Profit
Subcontract Labor	Overhead + profit are applied at the rates listed to our direct invoice cost, including subcontractor’s overhead & profit	Cost + 12% O/H + 10% Profit
Subcontract Material	Overhead + profit are applied at the rates listed to our direct invoice cost, including subcontractor’s overhead & profit	Cost + 12% O/H + 10% Profit

Fees

Use only the categories shown. Ranges for fees are not acceptable.

Category of Fee	How Determined And Used	Years Applied (One-time, annual, etc.)
Technical Energy Audit and Project Development	$0.10 per Square Foot	One time
Solicit & Evaluate Project Financing Proposals	No fee for this service	N/A
Design	6% of Honeywell's direct installed cost from bids/proposals for subs and suppliers plus overhead & profit.	One time
Contingency	7% of Honeywell's direct installed cost from bids/proposals for subs and suppliers plus overhead & profit.	One time
Permits	Costs driven by local requirements. Direct costs will be passed through to the County @ Honeywell cost plus overhead & profit	One time
Performance Bond	$4.50 per $1,000 of the total installed cost of the project plus overhead & profit.	One time
Project Management	7% of Honeywell's direct installed cost from bids/proposals for subs and suppliers plus overhead & profit.	One time
Commissioning	1.5% of Honeywell's direct installed cost from bids/proposals for subs and suppliers plus overhead & profit.	One time
Training	Additional costs for customized training beyond basic O&M included in the cost of the measure will be established based on a detailed estimate of Honeywell cost + course fees + expenses marked up at the contract overhead & profit rates.	One time
Monitoring and Verification	To be established for project based on a detailed estimate of Honeywell cost plus overhead & profit.	One time
Warranty Service	Cost for warranty service is included in the installation quotes we receive from subs and suppliers. The only possible added cost would be for any requested warranty service outside normal business hours or beyond the manufacturer's standard warranty term. If this is requested, it will be passed through from the sub or supplier at the rate quoted without any additional Honeywell mark-up or fees.	One time
Maintenance on Installed Measures	This is not required by Honeywell on a performance contract and there are no fees associated with this category. Actual costs for the County's desired services will be developed and negotiated per the project development maintenance plan.	Annually

C. MEASUREMENT AND VERIFICATION PLAN INCLUDING KEY VARIABLES TO BE MEASURED

D. INVESTMENT GRADE AUDIT FINDINGS

E. ENERGY SERVICES PROPOSAL WITH DETAILED COST BREAKDOWN

Honeywell

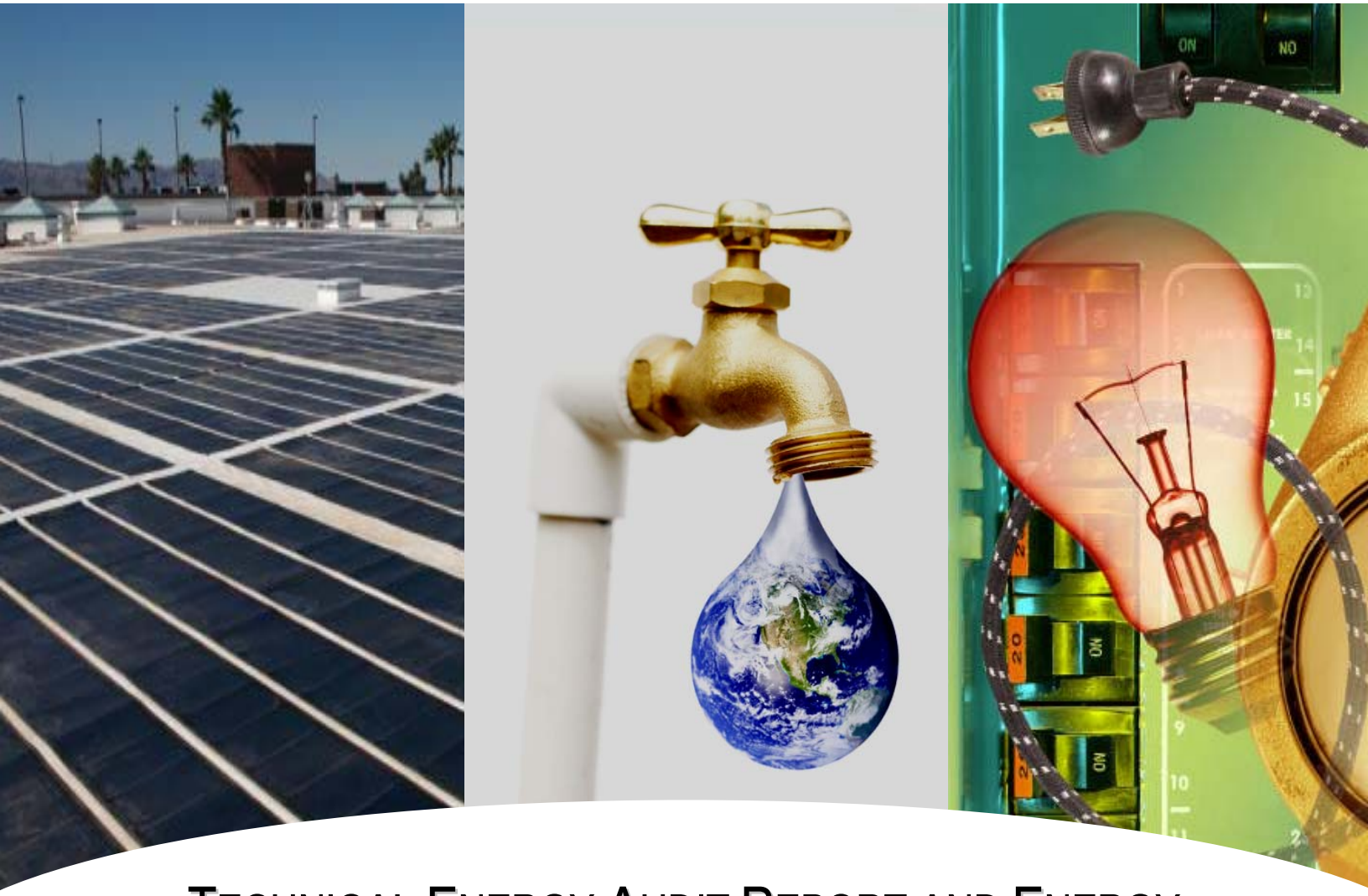

TECHNICAL ENERGY AUDIT REPORT AND ENERGY PERFORMANCE CONTRACT PROPOSAL

FOR

EAST GRAND SCHOOL DISTRICT

PRESENTED BY

HONEYWELL BUILDING SOLUTIONS

JUNE 14, 2009

REV 1 8-4-09

TABLE OF CONTENTS

Report Tab	Contents	Page
1. Overview	a. Contact information	
	b. ECM summary tables	
	c. Baseline summary	
	d. Total cost savings & % reduction	
	e. Facility descriptions	
	f. Summary description of ECMs, including cost & savings	
	g. Discussion of measures considered but not recommended	
	h. Conclusions and recommendations	
2. Base Year Energy Use	a. Description of current billing rates	
	b. Summary of all utility bills	
	c. Identification & definition of base year	
	a. Estimated end use consumption of base year	
3. ECM Descriptions	a. ECM 1.1	
	b. ECM 3.1	
	c. ECM 4.1	
	d. ECM 4.2	
	e. ECM 4.3	
	f. ECM 4.4	
	g. ECM 4.5	
	h. ECM 5.1	
	i. ECM 6.1	
	j. ECM 8.1	
	k. ECM 8.2	
	l. ECM 12.1	
	m. ECM 14.0	
4. Savings Calculations	a. ECM 1.1	
	b. ECM 3.1	
	c. ECM 4.1	
	d. ECM 4.2	
	e. ECM 4.3	
	f. ECM 4.4	
	g. ECM 4.5	
	h. ECM 5.1	
	i. ECM 6.1	
	j. ECM 8.1	
	k. ECM 8.2	
	l. ECM 12.1	
	m. ECM 14.0	
	n. Savings calculations, all measures	

5. Cost Estimate	a. Detailed Scope	
	b. Anticipated Costs	
	c. Proposed Financing Structure	
6. Miscellaneous	a. Description of savings guarantee	
	b. Useful life of equipment	
	c. Commissioning plan	
	d. Measurement & verification plan	
	e. Compatibility with existing systems	
7. Appendix	a. Description of data collection methodology	
	b. Supporting calculations and assumptions	
	c. Specifications and manufacturer cut sheets	
	d. Detailed lighting counts	
	e. Subcontractor cost proposals	
	f. Standards of comfort	
	g. Energy end use analysis reports	

1. OVERVIEW

A. CONTACT INFORMATION:

1. Project Management
    a. Carol Thompson, Installation Project Manager
    2700 Richards Road, Suite 102
    Bellevue, WA 98005
    Tel 206-824-0652
    Cell 206-419-3374
    E-Mail Carol.Thompson@Honeywell.com

    b. Mark Sharlow, Project Management Leader
    101 Columbia Road
    Morristown, NJ 07962
    Tel 847-788-1840
    Cell 847-732-8606
    E-Mail Rick.Hathaway@Honeywell.com

2. Engineering
    a. Matthew Benoit, Performance Contracting Engineer
    11131 W. 17th Ave, #12-102
    Lakewood, CO 80215
    Tel 303-274-0337
    Cell 303-548-4270
    E-Mail Matthew.Benoit@Honeywell.com

    b. Kevin Cross, Performance Contracting Engineer
    300 Peterson St

    E-Mail Kevin.Cross@Honeywell.com

    c. Rick Otta, Performance Contracting Engineer Principal
    2700 Richards Road, Suite 102
    Bellevue, WA 98005
    Tel 425-698-6096
    Cell 206-409-6823
    E-Mail Rick.Otta@Honeywell.com

3. Measurement & Verification
   a. Thayer Hussey, Measurement & Verification Specialist
      3307 56th St.
      Lubbock, TX 79413
      Tel 806-784-0044
      Cell 469-644-3961
      E-Mail Thayer.Hussey@Honeywell.com

   b. Paul Gimbel, Measurement & Verification Specialist
      2123 South 92nd Street
      West Allis, WI 53227
      Tel 414-546-3535
      Cell 414-218-9360
      E-Mail Paul.Gimbel@Honeywell.com

   c. Marco Clerx, Service Process Leader
      500 Narragansett Park Drive
      Pawtucket, RI 02861
      Tel 401-727-1300 ext 258
      Cell 404-225-6926
      E-Mail Marco.Clerx@Honeywell.com

4. Account Management
   a. Gary Berngard, Account Executive Energy Services
      345 Inverness Drive South
      Englewood, CO 80112
      Tel 303-442-5700
      Cell 303-589-5219
      E-Mail Gary.Berngard@Honeywell.com

   b. Kevin Taylor, Account Executive Services
      131 Peregrine Way
      Divide, CO 80814
      Tel 719-687-8385
      Cell 720-289-7033
      E-Mail Kevin .Taylor@Honeywell.com

   c. Brett Lichtenthaler, Western Region Sales Manager
      12503 SE Mill Plain Blvd
      Vancouver, WA 98684
      Tel 360-253-8100 ext 304
      Cell 360-931-4634
      E-Mail Brett.Lichtenthaler@Honeywell.com

   d. Ed Nichols, Western Region Sales Leader
      1622 Mac Davis Lane Suite 102
      Lubbock, TX 79401

Tel 806766-6306
Cell 806-789-7878
E-Mail Ed.Nichols@Honeywell.com

e. Cathy Ward, Western Region VP
353-A Vintage Park Drive
Foster City, CA 94404
Tel 650/918-3344
Cell 510/715-6476
E-Mail Cathy.Ward@Honeywell.com

5. East Grand School District
   a. Nancy Karas, Superintendent
   P.O. Box 125/299 County Road 61
   Granby, CO 80446
   Tel 970/887-2581
   E-Mail nkaras@egsd.org

   b. John Weninger, Director of Maintenance/Facilities
   P.O. Box 125/299 County Road 61
   Granby, CO 80446
   Tel 970/887-2581
   E-Mail jweninger@egsd.org

6. Colorado Governor's Energy Office
   a. Joel Asrael, Commercial Program Manager
   1580 Logan Street, Suite 100
   Denver, CO 80203
   Tel 303/866-2204
   Fax 303/866-2930
   Cell 303/503-7869
   E-Mail Joel.Asrael@state.co.us

B. ECM SUMMARY TABLE

TABLE 1 IMPLEMENTATION COST BY ENERGY CONSERVATION MEASURE (ECM)

ECM ID	ECM Description	Proposed First Year Annual Cost Savings	Total Investment	SPBP, yrs
1.1	Boiler plant upgrades	$23,173	$177,514	7.7
3.1	Control system upgrades	$38,133	$261,829	6.9
4.1	Unit ventilator replacement	$0	$90,422	N/A
4.2	HRU system installation	$0	$244,740	N/A
4.3	Furnace installation	$0	$24,170	N/A
4.4	Condensing unit replacement	$0	$18,988	N/A
4.5	GFRH installation	$0	$23,083	N/A
5.1	Lighting fixture & lighting controls retrofit	$36,189	$281,102	7.8
6.1	Window and door weatherization	$5,275	$46,471	8.8
8.1	Add VFD's to AHU Fan Motors	$4,922	$36,492	7.4
8.2	DCW pump replacement	$2,000	$42,331	21.2
12.1	Uninterruptible power supply replacement	$500	$6,264	12.5
14.0	Fire Alarm Upgrade	$7,800	$213,040	27.3
	Total For All Measures:	$117,992	$1,466,446	12.4
		Contract Fees	**Honeywell OH&P Mark-up**	**Scheduled Values**
	Audit Fee	$37,864		$37,864
	Design	$72,120	$15,866	$87,986
	Contingency	$84,140	$18,511	$102,651
	Project Management	$84,140	$18,511	$102,651
	Commissioning	$18,030	$3,967	$21,997
	Training	$16,978	$3,735	$20,713
	Monitoring & Verification	$10,075	$2,217	$12,292
	Performance Bond	$8,337	$1,834	$10,171
	Total Price			**$1,862,771**
	Overall Simple Payback			**15.8**

C. Baseline Summary

TABLE 2 PROPOSED FIRST YEAR ANNUAL COST SAVINGS

ECM	ECM Energy Baseline MMBtu/yr	Electric Energy Savings kWh/yr	Electric Demand Savings kW/yr	Electric Energy Savings	Gas Savings MMBtu/yr	Gas Savings	O & M Savings	Total Savings	Total Cost	Simple Payvback	Est CO_2 Emmissions Reduction lb/yr
Mechanical Scope Of Work											
ECM 1.1 Boiler Upgrades	958	0	0	$0	50	$373	$22,800	$23,173	$177,514	7.7	5,855
ECM 4.1 Unit Ventilator Replacement	0	0	0	$0	0	$0	$0	$0	$90,422	N/A	0
ECM 4.2 HRU installation	0	0	0	$0	0	$0	$0	$0	$244,740	N/A	0
ECM 4.3Furnace installation	0	0	0	$0	0	$0	$0	$0	$24,170	N/A	0
ECM 4.4 Condensing unit replacement	0	0	0	$0	0	$0	$0	$0	$18,988	N/A	0
ECM 4.5 GFRH installation	0	0	0	$0	0	$0	$0	$0	$23,083	N/A	0
ECM 8.2 DCW Pump Replacement	0	0	0	$0	0	$0	$2,000	$2,000	$42,331	21.2	0
Totals:	**958**	**0**	**0**	**$0**	**50**	**$373**	**$24,800**	**$25,173**	**$621,248**	**24.7**	**5,855**
Control System Scope Of Work											
ECM 3.1 Control System Upgrades	24,274	223,459	-63	$12,173	2,294	$17,359	$8,600	$38,133	$261,829	6.9	689,401
ECM 8.1 Install VFD's	386	92,234	0	$4,922	0	$0	$0	$4,922	$36,492	7.4	173,677
ECM 12.1 Uninterruptible Power Supply	0	0	0	$0	0	$0	$500	$500	$6,264	12.5	0
Totals:	**24,660**	**315,693**	**-63**	**$17,096**	**2,294**	**$17,359**	**$9,100**	**$43,555**	**$304,585**	**7.0**	**863,077**
Lighting Scope Of Work											
ECM 5.1 Lighting Fixture/Controls Retrofit	**3,666**	**417,168**	**1,631**	**$31,057**	**-221**	**-$1,868**	**$7,000**	**$36,189**	**$281,102**	**7.8**	**759,648**
Weatherization Scope Of Work											
ECM 6.1 Window & Door Weatherization	**1,463**	**0**	**0**	**$0**	**393**	**$2,975**	**$2,300**	**$5,375**	**$46,471**	**8.6**	**46,020**
Fire Alarm & Instant Alert	**0**	**0**	**0**	**$0**		**$0**	**$7,800**	**$7,500**	**$213,040**	**28.4**	**0**
TOTALS:	**30,747**	**732,861**	**1,568**	**$48,153**	**2,516**	**$18,839**	**$51,000**	**$117,792**	**$1,466,446**	**12.4**	**1,674,601**
Project SF:	**378,641**										
Total Energy Savings:	**13.3 kBtu/SF**										

Notes:
1). Project size (SF) includes only building square footage affected by installed ECM's in project.
2). Conversion factors for CO_2 reduction (lbs): 1.883 lb/kWh; 117.1 lb/MMBtu

D. TOTAL COST SAVINGS & % REDUCTION

	Electricity					
	Consumption (kWh)	Demand (kW)	Fossil Fuel (MMBTU)	Electric Cost	Fossil Fuel Cost	Total Cost
Baseline	2,641,055	7,423	19,127	$200,632	$160,361	$360,993
Adjusted baseline	2,998,298	8,236	20,514	$233,197	$172,218	$405,415
Proposed	2,265,437	6,668	17,998	$181,510	$151,077	$332,587
Savings	732,861	1,568	2,516	$51,687	$21,141	$72,828
Guaranteed Savings				$48,153	$18,840	$66,993
					Total % Energy Savings:	**16.5%**

Note that baseline adjustments in the table above have been made for ECMs 3.1, which are reflected in the table above. The reasoning for and approach towards making these baseline adjustments are explained in the savings calculation discussions for individual measures in Section 2 of this document. Percent energy cost reductions are based on guaranteed savings and adjusted baseline figures.

Cost/Energy Savings Table Notes:

1. *Savings will not be adjusted for any measure based on either current year weather or occupancy changes.*
2. *Monetary savings will be calculated annually using base energy rates escalated at the agreed to annual rate of 4.25% per year. This number is the weighted average factor for all utilities affected by the proposed retrofits. This number is based on a 10 year analysis of actual utility bills for the period from 11/1/98 to 10/1/08 which resulted in an average annual escalation of 12.5% for natural gas and an average annual escalation of 3.2% for electricity.*

Electrical energy (kWh) and fossil fuel (MMBTU) savings listed above are projected figures. Total average guaranteed savings are equal to 92% of projected savings. Savings guarantee factors by measure are as follows:

ECM	Guarantee Factor	ECM	Guarantee Factor
1.1 Boiler Upgrades	90%	5.1 Lighting Fixture/Controls Retrofit	95%
3.1 Control System Upgrades	90%	6.1 Window and Door Weatherization	90%
4.1 Unit ventilator Replacement	N/A	8.1 Add Variable Frequency Drives To Supply Fan Motors	90%
4.2 Heat Recovery Unit System Installation	N/A	8.2 Domestic Cold Water Pump Replacement	N/A
4.3 Furnace Installation	N/A	12.1 Uninterruptible Power Supply Replacement	N/A
4.4 Condensing Unit Replacement	N/A	14.0 Fire Alarm Upgrade	N/A
4.5 Gas fired Radiant Heater Installation	N/A		

Total cost follows the open book pricing model from the Technical Energy Audit agreement ("TEA") between the East Grand School District and Honeywell. Please refer to TEA report section *5. Cost Estimate* for a complete breakdown of direct costs, etc. for each measure and the overall project.

E. FACILITY DESCRIPTIONS

Description Of Existing Facilities, Mechanical, and Electrical Systems

Building Acronym	Building Area, GSF	Heating Systems	Cooling Systems	Air Distribution Systems	Lighting System	Control System
MPHS	120,781	One 3,082 MBH, One 3,297 MBH, & Two 786 MBH output natural gas-fired, forced draft boilers	No cooling except computer labs that have DX cooling served by two nominal 4-ton air-cooled condensing units	Nine constant volume HVU's, Six constant volume AHU's with reheat, One constant volume single-zone AHU, and Two constant volume 100% recirculation AHU's that cool the computer labs.	T8 & T12 4' lamps with electronic ballasts. Metal Halide lamps in gyms	Honeywell EBI & Tridium
EGMS	86,465	Two 3,550 MBH output natural gas-fired, forced draft boilers	No cooling	Six constant volume AHU's with reheat, Three constant volume single-zone AHU's, and One constant volume 100% OSA AHU providing combustion air to the boiler room	T8 2' & 4' lamps with electronic ballasts. Metal Halide lamps in gym & commons/cafeteria. CF lamps in restrooms	Honeywell EBI
FVES	52,910	One 750 MBH & Two 481 MBH output natural gas-fired, forced draft boilers	No cooling	Eighteen unit ventilators, Constant volume single zone HVU for old gym, Constant volume single zone AHU for new gym, & Two constant volume AHU's with reheat	T8 4' & 8' lamps with electronic ballasts. Metal Halide lamps in gym & main entrance area. CF lamps. Incandescant lamps in old private restrooms	Honeywell EBI & Tridium

Description Of Existing Facilities, Mechanical, and Electrical Systems, Cont.'

Building Acronym	Building Area, GSF	Heating Systems	Cooling Systems	Air Distribution Systems	Lighting System	Control System
GES	57,279	Two 2,000 MBH & Two 267 MBH output natural gas-fired, forced draft boilers	No cooling except computer lab that has DX cooling served by one nominal 3.5-ton air-cooled condensing unit	One unit ventilator & Five constant volume rooftop AHU's with reheat	T8 4' & 8' lamps & 4' U-Tube with electronic ballasts. Metal Halide lamps in gym. CF lamps. T12 2' lamps with electronic ballasts & Incandescant lamps in private restrooms.	Honeywell EBI & Tridium
GLES	19,000	One 750 MBH output natural gas-fired, forced draft boilers	No cooling	Nine unit ventilators, Constant volume single zone HVU for gym, & One constant volume AHU with reheat	T8 4' & 8' lamps with electronic ballasts. Metal Halide lamps in gym. Incandescant lamps in old private restrooms	Honeywell EBI
IPCS	9,000	Seven 81 MBH output wall hung exterior packaged gas-fired heating & ventilating units plus one 81 MBH output gas-fired HVU located interior to a modular unit	No cooling	Eight constant volume single-zone HVU's	T8 4' lamps with electronic ballasts.	Manual programmabl e thermostats
DO	12,706	Three 90 MBH output high efficiency gas-fired furnaces & two 23.4 MBH output gas-fired unit heaters for warehouse offices and three 60 MBH output gas-fired unit heaters in the warehouse	Offices have DX cooling coils installed on furnaces served by one 5-ton, one 3.5-ton, & one 2.5-ton air-cooled condensing units	Three constant volume furnaces	T8 4' & 8' lamps with electronic ballasts. Metal Halide lamps in warehouse. CF lamps. T12 2' lamps with electronic ballasts & incandescant lamps in restrooms	Manual programmabl e thermostats

Description Of Existing Facilities, Mechanical, and Electrical Systems, Cont.'

Building Acronym	Building Area, GSF	Heating Systems	Cooling Systems	Air Distribution Systems	Lighting System	Control System
TF	20,500	One 939 MBH output natural gas-fired, forced draft boiler. Eight, 80 MBH input gas-fired radiant tube heaters serve the bus barn. Hydronic radiant floor heating in the offices and maintenanaces bays and a hydronic snowmelt system for all overhead door aprons at the facility.	No cooling	Three gas-fired 100% outside air makeup air units serve the maintenance bays. Three constant volume single zone AHU's serve the offices.	T8 4' & 8' lamps with electronic ballasts. Metal Halide lamps in bays. CF lamps.	Manual programmabl e thermostats for AHU's. Manual controls for makeup air units and gas-fired radiant heaters. Seven manual thermostats for hydronic radiant floor system and snowmelt sensor for snowmelt system.

Building Acronym Key:

MPHS = Middle Park High School, EGMS = East Grand Middle School, FVES = Fraser Valley Elementary School, GES = Granby Elementary School, GLES = Grand Lake Elementary School, IPCS = Indian Peaks Charter School, DO = District Office, TF = Transportation Facility

F. SUMMARY DESCRIPTION OF ECMS, INCLUDING COST & SAVINGS

ECM ID	ECM Name	ECM Description	Buildings Affected
1.1	Boiler plant upgrades	Grand Lake Elementary School - Replace existing hot water boiler and circulating pumps with two boilers and two circulating pumps. Fraser Valley Elementary School - Cross-connect new boiler plant with two boilers with old single boiler plant. This retrofit will provide improved plant reliability and will result in lower energy costs.	Grand Lake Elementary School & Fraser Valley Elementary School
3.1	Control system upgrades	Upgrade Honeywell EBI control system or install new web-enabled control system for HVAC equipment serving buildings affected and make necessary programming changes to the existing/new programming as appropriate. Include subroutines to conserve energy such as unoccupied period setback, 24/7 scheduling for start/stop of equipment during weekend events, optimum start, CO2 controlled occupancy for gyms, optimize economizer controls, and close outside air dampers during unoccupied periods.	Middle Park High School, East Grand Middle School, Fraser Valley Elementary School, Granby Elementary School, Grand Lake Elementary School, Indian Peaks Charter School, District Office, and Transportation Facility.
4.1	Unit ventilator replacement	Replace original classroom unit ventilators. This measure will provide improved system reliability.	Grand Lake Elementary School & Fraser Valley Elementary School
4.2	HRU system installation	Granby Elementary School - Install heat recovery system to serve gym. This retrofit will provide ventilation as is needed for this area. District Office - Install heat recovery system to serve warehouse. This retrofit will provide dilution ventilation needed for this area to prevent CO fumes from entering the adjacent District Offices.	Granby Elementary School & District Office
4.3	Furnace installation	Install furnace to serve east warehouse offices. This retrofit will provide ventilation and cooling to this area currently served by gas-fired unit heaters.	District Office
4.4	Condensing unit replacement	Replace existing condensing units serving offices and boardroom. This retrofit will result in lower maintenance costs and replace R22 refrigerant systems with environment friendly R410.	District Office
4.5	GFRH installation	Replace existing unit heaters serving warehouse with gas-fired radiant heaters. This retrofit will result in lower energy costs and improved heating.	District Office
5.1	Lighting fixture & lighting controls retrofit	Retrofit lighting fixtures with more efficient lamp and ballast combinations. Replace lighting fixtures with new fixtures where necessary. Delamp and add reflectors where feasible. This measure will result in improved lighting quality and lower energy and demand costs. Install occupancy sensors or photocells as appropriate to switch lighting fixtures off when spaces are unoccupied. This measure will result in lower energy and demand costs.	Middle Park High School, East Grand Middle School, Fraser Valley Elementary School, Granby Elementary School, Grand Lake Elementary School, Indian Peaks Charter School, District Office, and Transportation Facility.

ECM ID	ECM Name	ECM Description	Buildings Affected
6.1	Window and door weatherization	Replace weather stripping and window caulking as needed. This measure will result in improved occupant comfort and lower energy costs.	Middle Park High School, Fraser Valley Elementary School, Granby Elementary School, Grand Lake Elementary School, Indian Peaks Charter School, and District Office.
8.1	Add VFD's to AHU Fan Motors	Install variable frequency drives to appropriate gym and common area AHU fan motors and rebalance airside systems. This measure will result in longer motor life and lower energy and demand costs.	Middle Park High School, East Grand Middle School, and Fraser Valley Elementary School.
8.2	DCW pump replacement	Replace domestic cold water (DCW) booster pumps and motors. This measure will result in improved system reliability and lower energy, demand and maintenance costs.	East Grand Middle School
12.1	Uninterruptible power supply replacement	Replace existing battery based power supply for emergency lighting and fire alarm system. This retrofit will provide improved system reliability.	Fraser Valley Elementary School and Grand Lake Elementary School
14.0	Fire alarm system upgrade	Upgrade central fire alarm panels as required and integrate to District-wide system into existing Honeywell energy management system. Replace of existing field detection devices with addressable devices as required.	Middle Park High School, Fraser Valley Elementary School, Granby Elementary School, and Grand Lake Elementary School.

G. DISCUSSION OF MEASURES CONSIDERED BUT NOT RECOMMENDED

Several energy saving conservation measures were considered during the technical audit but are not recommended for inclusion in the performance contract for the following reasons.

Install Wind Turbine:
We considered the installation of a wind turbine on the site to generate electrical power to put back onto the grid so that the School District would receive retail energy credits to help supplement their energy costs. The measure was well received by the School District and was taken to a Level 2 Wind Energy Study performed by a company called 3-Tier. The Level 2 Study performs a wind computer model analysis that is site specific and is based on historical weather data provided from NOAA. Unfortunately, that study resulted in an average wind velocity at the site of just over 3.7 m/sec which is not a velocity found to be feasible considering the high implementation costs versus a very limited electrical generation capacity at such a low velocity. However, the Western Area Power Administration Energy Services Equipment Loan Program has agreed to loan an anemometer and data-loggers as an educational tool for the School District which can be used in a classroom setting to teach students about renewable energy. The anemometer will be mounted to an existing tower located adjacent to the football field and will provide a valuable learning tool for students in addition to gathering real-time data for comparison to 3-Tier's computer model.

Install Heat Recovery System For Kitchen Supply and Exhaust Systems:
We considered installing an air-to-air heat recovery system between the kitchen makeup air and exhaust systems at the Middle Park High School but due to the limited annual kitchen usage, 1,000 hours per year, the implementation costs resulted in an ECM with a long non-feasible simple payback.

Replace Electric Kitchen Equipment With Gas-Fired Equipment:
We considered replacing the electric equipment including a 3-section baking oven, electric fryer, and an electric griddle cook top unit with gas appliances at the Middle Park High School but due to the limited annual kitchen usage, 1,000 hours per year, tthe implementation costs resulting from replacement equipment and the installation of a new gas line to the kitchen resulted in an ECM with a long non-feasible simple payback.

Provide Bi-Level Switching For Classroom Lighting:
We considered modifying the existing T8 3 and 4-bulb fluorescent classroom light fixtures to operate by bi-level switching. The costs for an additional ballast, rewiring the fixtures, and the low power draws at the majority of facilities resulted in an ECM with a long non-feasible simple payback and no guarantee for energy savings.

Install Instantaneous Domestic Water Heaters At Point Of Use:
We considered installing electric instantaneous water heaters in bathrooms located a distance from the central gas-fired water heater but the cost savings did not justify the recirculation line losses and standby tank losses of the central water heater. In addition, the cost of electricity at the majority of the schools and facilities exceeds the cost of gas by a factor of 2.5.

Window Replacements:
We considered replacing the poor quality double-pane windows with little air gap between panes at the District office but the prohibitive implementation cost resulted in a long non-feasible simple payback. ECM 6.1 Window and Door Weatherization will result in energy savings and improved thermal comfort through the installation of weather stripping exterior doors and caulking the seals around the older, poor sealing, windows at the schools and facilities in the school district.

H. CONCLUSIONS AND RECOMMENDATIONS

During audit agreement negotiations, we established four project goals in collaboration with the School District:

1) Reduce energy consumption, demand & cost.
2) Revitalize infrastructure for comfort, lighting quality, etc.
3) Reduce the environmental impact from the School District.
4) Provide a 20-year revenue neutral project where:
   a. Bulk of improvements are paid out of guaranteed annual energy, water and operations & maintenance ("O&M") cost savings
   b. Annual savings > (Loan payments + measurement & verification ("M&V") costs)

We collaborated closely with the School District (including key facility management and maintenance staff) to identify a comprehensive plan to achieve these objectives. A preliminary shopping list of energy conservation and facility improvement measures was presented to the School District on February 12, 2009. The list of measures was pared down by the School District and the Honeywell Building Solutions team at that time to a package of measures that we all agreed was optimal in terms of meeting the above objectives. We then completed the due diligence (design, savings modeling, competitive bidding to subs and suppliers, preparation of this audit deliverable) to validate the viability of this package.

We strongly encourage you to consider full implementation of the proposed Honeywell Performance Contract for several reasons:

1) Guaranteed first year energy savings of $66,992 will result in a 16.1% cost reduction versus your adjusted baseline.
2) First year projections indicate a carbon footprint reduction of roughly 1.7 million pounds of CO_2 as a direct result of the project's energy efficiency measures.
3) The project will resolve several indoor air quality, occupant comfort and equipment reliability issues as part of the project and ensures the sustainability of the savings:

   Granby Elementary School
   a. The addition of a heat recovery exhaust system will bring the floor area of the Gym into compliance with the indoor air quality standard of care outlined in ASHRAE 62.1-2007. The inclusion of waste heat recovery will substantially reduce the energy costs associated with the heating of make-up outside air required for the exhaust system.

   Fraser Valley Elementary School
   a. Upgrade of classroom unit ventilators will result in improved comfort, as well as energy savings.
   b. The installation of a plate heat exchanger will combine two separate boiler plants within the building to provide much needed redundancy to the older single boiler plant. This enables the single 10-year old boiler to continue to remain in service with back-up heating provided by the newer two boiler plant. This measure saves implementation costs for replacement of the existing boiler with two new boilers providing redundancy.

   East Grand Middle School
   a. The domestic cold water booster pump upgrade will replace two pumps that are not necessarily in very reliable operating condition and installed in a location that is very difficult to service and maintain.

Grand Lake Elementary School

a. Upgrade of classroom unit ventilators will result in improved comfort, as well as energy savings.
b. The boiler system upgrades will replace a single boiler with two new boilers providing much needed redundancy, reduced energy and maintenance costs and improved thermal comfort.

District Office

a. The addition of a heat recovery exhaust system to the Warehouse will eliminate the current problems with exhaust fumes being introduced into the adjacent offices from vehicles running in the Warehouse. The inclusion of waste heat recovery will substantially reduce the energy costs associated with the heating of make-up outside air required for the exhaust system. In addition, carbon monoxide sensor control of the new heat recovery unit will further reduce operating hours and attendant energy costs.
b. The installation of a high-efficiency furnace with DX cooling will provide thermal comfort to the Warehouse offices which currently are heated only by inefficient gas-fired unit heaters.

2. BASE YEAR ENERGY USE

A. DESCRIPTION OF CURRENT BILLING RATES:

Current billing rates, including schedules & riders

Electric power is provided by Mountain Parks Electric Inc. and natural gas transportation is provided by Xcel Energy and natural gas commodity is provided by Seminole Energy Services. Water and sewer for the schools and facilities located in Granby, Colorado are provided by the Town of Granby. Water and sewer for Fraser Valley Elementary School is provided by the Town of Fraser, Colorado. Water and sewer for Grand Lake Elementary School is provided by the Town of Grand Lake, Colorado. Water and sewer usage and rates were not high enough to justify any water conservation measures.

A summary of current billing rates applying to the buildings included in the technical energy audit is shown below, and on the following pages.

Summary of Utilities and Schedules by Building:
East Grand School District

Building Name	Building Acronym	Building Address	MPEI Electric Rate	Seminole Gas Service	Xcel Gas Rate
Middle Park High School	MPHS	795 N. 2nd Ave., Granby CO 80446	Large Power	Yes	TFS
East Grand Middle School	EGMS	251 W. Diamond Ave., Granby CO 80446	Large Power	Yes	TFS
Fraser Valley Elementary School	FVES	125 Eastom Ave., Fraser CO 80442	Large Power	Yes	TFS
Granby Elementary School	GES	202 W. Topaz, Granby CO 80446	Large Power	Yes	TFS
Grand Lake Elementary School	GLES	301 Marina Dr., Grand Lake CO 80447	Large Power	Yes	TFS
Indian Peaks Charter School	IPCS	91 W. Diamond Ave., Granby CO 80446	General Service	No	CSG
District Office	DO	299 County Road 611, Granby CO 80446	General Service	No	CSG (taxable)
Transportation Facility	TF	303 County Road 611, Granby CO 80446	General Service	Yes	TFS

UTILITY RATE ANALYSIS:
GENERAL SERVICE ELECTRIC RATE
EAST GRAND SCHOOL DISTRICT, COLORADO
MAY 28, 2009

General

Utility rate schedules and historical utility costs were reviewed for the performance contract proposal. Utilities considered were electric power and natural gas. This page summarizes the "General Service" electric rate that applies to Indian Peaks Charter School, the District Office, and the Transportation Facility.

Electric Power

Mountain Parks Electric, Inc. provides electric service to Indian Peaks Charter School, the District Office, and the Transportation Facility according to the "General Service" electric rate, which was in effect on May 28th, 2008, according to the Mountain Parks Electric, Inc. website (http://www.mpei.com/new-rateshome1.htm; see "MPEI Rates - Screen shots" tab).

Base Rates

Meter Charge		
Service availability charge	$25.00	/month
Energy Rate		
For all energy used	$0.087	/kWh

Adjustment and Adjusted Rates:

Inspection of utility bills shows that the base rates are not subject to a franchise fee, sales tax, or modification by any other rate schedule. Thus, no adjustment to the base rates is required.

UTILITY RATE ANALYSIS:
GENERAL SERVICE ELECTRIC RATE
EAST GRAND SCHOOL DISTRICT, COLORADO
MAY 28, 2009

General

Utility rate schedules and historical utility costs were reviewed for the performance contract proposal. Utilities considered were electric power and natural gas. This page summarizes the "Large Power" electric rate that applies to Middle Park High School, East Grand Middle School, Fraser Valley Elementary School, Granby Elementary School, and Grand Lake Elementary School.

Electric Power

Mountain Parks Electric, Inc. provides electric service to Middle Park High School, East Grand Middle School, Fraser Valley Elementary School, Granby Elementary School, and Grand Lake Elementary School according to the "Large Power" electric rate, which was in effect on May 28th, 2008, according to the Mountain Parks Electric, Inc. website (http://www.mpei.com/new-rateshome1.htm; see "MPEI Rates - Screen shots" tab).

Base Rates

Meter Charge		
Service availability charge	$88.40	/month
Demand Rate		
Demand charge, all kW	$4.35	/kW
Energy Rates		
First 200 kWh per kW demand (Tier 1)	$0.087	/kWh
Next 200 kWh per kW demand (Tier 2)	$0.059	/kWh
Over 400 kWh per kW demand (Tier 3)	$0.034	/kWh

UTILITY RATE ANALYSIS:
GENERAL SERVICE ELECTRIC RATE
EAST GRAND SCHOOL DISTRICT, COLORADO
MAY 28, 2009

Distribution of energy use by rate tier by school

Analysis of utility bills shows the following percentages of first, second, and third tier energy use for the schools receiving service under this rate for the period December 2007 - November 2008.

Middle Park High School	Tier 1:	66%
	Tier 2:	34%
	Tier 3:	0%
East Grand Middle School	Tier 1:	65%
	Tier 2:	35%
	Tier 3:	0%
Fraser Valley Elementary School	Tier 1:	60%
	Tier 2:	38%
	Tier 3:	2%
Granby Elementary School	Tier 1:	86%
	Tier 2:	14%
	Tier 3:	0%
Grand Lake Elementary School	Tier 1:	89%
	Tier 2:	11%
	Tier 3:	0%

UTILITY RATE ANALYSIS:
GENERAL SERVICE ELECTRIC RATE
EAST GRAND SCHOOL DISTRICT, COLORADO
MAY 28, 2009

Projected savings and energy rate determination by school

Projected electric energy savings as a fraction of base year consumption for this project are shown for each school below. The effective base electric energy rate is determined by taking a weighted average of the tiers in which the savings will take place, starting from the highest tier.

Middle Park High School	Projected savings:	20%
	Effective base energy rate:	$0.059 /kWh
East Grand Middle School	Projected savings:	27%
	Effective base energy rate:	$0.059 /kWh
Fraser Valley Elementary School	Projected savings:	23%
	Effective base energy rate:	$0.057 /kWh
Granby Elementary School	Projected savings:	19%
	Effective base energy rate:	$0.066 /kWh
Grand Lake Elementary School	Projected savings:	31%
	Effective base energy rate:	$0.077

Adjustment and Adjusted Rates

Inspection of utility bills shows that the base rates are not subject to a franchise fee, sales tax, or modification by any other rate schedule. Thus, no adjustment to the base rates is required.

UTILITY RATE ANALYSIS:
NATURAL GAS XCEL TFS RATE + SEMINOLE COMMODITY RATE
EAST GRAND SCHOOL DISTRICT, COLORADO
JUNE 1, 2009

Projected savings and energy rate determination by school

Natural Gas

Xcel Energy provides natural gas transport and Seminole Energy Services provides natural gas to Middle Park High School, East Grand Middle School, Fraser Valley Elementary School, Granby Elementary School, Grand Lake Elementary School, and the Transportation Facility according to the TFS natural gas rate and an adjustable monthly rate, respectively. The TFS rate went into effect on January 1, 2009. The commodity charge is averaged for the base year, i.e. December 2007 - November 2008.

Base Rates

Xcel Meter Charge	
Service and facility charge:	$77.83 /month/meter
Xcel Energy Rate (for transport)	
Usage charge:	$0.13111 /therm
Seminole Meter Charge	
Pipeline meter fee	$10.00 /month/meter

UTILITY RATE ANALYSIS:
NATURAL GAS XCEL TFS RATE + SEMINOLE COMMODITY RATE
EAST GRAND SCHOOL DISTRICT, COLORADO
JUNE 1, 2009

Seminole Energy Rate (for commodity)

The following base year billing data includes all charges that vary directly with natural gas consumption for the six sites considered:

Invoice date	Total MMBTU	Cost less meter fee
1/8/2008	2,444	$16,191.20
2/7/2008	2,588	$16,913.76
3/6/2008	2,197	$16,905.58
4/10/2008	2,056	$17,334.04
5/7/2008	1,697	$14,485.83
6/3/2008	1,197	$11,334.32
7/3/2008	616	$5,673.66
8/5/2008	442	$4,174.53
9/4/2008	134	$356.01
10/3/2008	700	$3,148.63
11/4/2008	1,725	$7,350.01
12/3/2008	2,625	$10,274.71
Totals:	18,421	$124,142.28

Average commodity rate for base year: $0.67392 /therm

Combined Xcel and Seminole rates:

Meter Charges
Service and facility charge + Pipeline meter fee: $87.83 /month/meter

Energy Rates
Xcel transportation charge + Seminole Commodity Rate: $0.80503 /therm

Note: the Xcel firm capacity reservation charge is ignored in the above analysis. It is based on the peak daily consumption at each site.

UTILITY RATE ANALYSIS:
NATURAL GAS XCEL TFS RATE + SEMINOLE COMMODITY RATE
EAST GRAND SCHOOL DISTRICT, COLORADO
JUNE 1, 2009

Adjustment and Adjusted Rates

Inspection of the Xcel Gas Tariff Index and utility bills shows that Xcel rates are affected by the following adjustments:

Gas Cost Adjustment (Tariff Sheet 50H, effective 5/1/09):	$0.0041000 /therm
Gas Demand Side Management Cost Adjustment (Tariff Sheet 42D, effective 1/1/09; applies to all base rates):	0.92%
General Rate Schedule Adjustment (Shown on utility bills only; applies to all base rates):	10.6600%
Franchise fee (Shown on utility bills only, applies to all base rates):	3.56%
Adjusted Xcel Meter Charge Service and facility charge:	$89.61
Adjusted Xcel Energy Charge Energy charge	$0.15506

Combined and adjusted Xcel and Seminole rates:

Combined and Adjusted Meter Charges Service and facility charge + Pipeline meter fee:	$99.61 /month/meter
Combined and Adjusted Energy Rates Xcel transportation charge + Seminole Commodity Rate:	$0.82898 /therm

UTILITY RATE ANALYSIS:
NATURAL GAS XCEL CSG RATE
EAST GRAND SCHOOL DISTRICT, COLORADO
JUNE 1, 2009

General

Utility rate schedules and historical utility costs were reviewed for the performance contract proposal. Utilities considered were electric power and natural gas. This page summarizes the Xcel natural gas CSG rate that applies to the District Office and Indian Peaks Charter School. Sales tax applies to Indian Peaks Charter School.

Natural Gas

Xcel Energy provides natural gas to the District Office and Indian Peaks Charter School according to the CSG natural gas rate. The CSG rate went into effect on January 1, 2009. The "gas cost adjustment" (commodity charge) is averaged for the base year, i.e. December 2007 - November 2008.

Base Rates

Meter Charge

Service and facility charge: $21.01 /month/meter

Xcel Energy Rate

Usage charge $0.13111 /therm

Commodity charge

The following base year billing data shows interstate pipeline and commodity charges only for the District Office. The computed energy rate will be the same for Indian Peaks Charter School.

Invoice date	Total therms	Interstate pipeline + commodity charges
1/8/2008	1,139	$858.86
2/8/2008	1,022	$806.02
3/10/2008	1,124	$959.47
4/8/2008	990	$864.69
5/8/2008	801	$717.19
6/9/2008	406	$408.64
7/8/2008	239	$259.82
8/8/2008	140	$142.69
9/8/2008	260	$274.06
11/10/2008	394	$271.22
12/8/2008	659	$463.72
Totals:	7,174	$6,026.38

Average interstate pipeline + commodity rate for base year: $0.84003 /therm

Combined Energy Rates

Xcel usage + interstate pipeline + commodity charges:	$0.97114 /therm

Note: the Xcel firm capacity reservation charge is ignored in the above analysis. It is based on the peak daily consumption at each site.

Adjustment and Adjusted Rates

Inspection of the Xcel Gas Tarrif Index and utility bills shows that no additional charges apply to the District Office gas bill. However, the Indian Peaks Charter School bill is affected by a sales tax rate of: 3.90%

Adjusted Meter Charge

Service and facility charge	$21.83 /month/meter

Adjusted Energy Rate

Xcel transportation charge + Seminole Commodity Rate:	$1.00902 /therm

UTILITY RATE ANALYSIS:
TOWN OF GRANBY WATER/SEWER RATE
EAST GRAND SCHOOL DISTRICT, COLORADO
MAY 28, 2009

General

Water and sewer rate schedules and historical utility costs were reviewed for the performance contract proposal. Utilities considered were water and sewer. This page summarizes the "North Service Area Water Usage Fees and Facility Charges per Quarter" for the Town of Granby, CO. The water rate applies to Middle Park High School, East Grand Middle School, Granby Elementary School, Indian Peaks Charter School, the District Office, and the Transportation Facility.

Water Rates

The Town of Granby, CO provides water/sewer service to Middle Park High School, East Grand Middle School, Granby Elementary School, Indian Peaks Charter School, the District Office, and the Transportation Facility according to the "North Service Area Water Usage Fees and Facility Charges per Quarter" water and sewer rate, which was in effect on January 1, 2009.

Base Rates

Meter Charge		
Facility Charge	$25.00	/Quarter
Water/Sewer		
For all water/sewer usage	$4.250	/kGal
Raw water usage	$2.000	/kGal

UTILITY RATE ANALYSIS:
TOWN OF FRASER WATER/SEWER RATE
EAST GRAND SCHOOL DISTRICT, COLORADO
MAY 28, 2009

General

Water and sewer rate schedules and historical utility costs were reviewed for the performance contract proposal. Utilities considered were water and sewer. This page summarizes the "In Town Water Rate Charges per Quarter" for the Town of Grand Lake, CO. The water rate applies to Grand Lake Elementary School.

Water Rates

The Town of Grand Lake, CO provides water/sewer service to Grand Lake Elementary School according to the "In Town Water Rate Charges per Quarter" water and sewer rate, which was in effect on April 1, 2009.

Base Rates

Water/Sewer

For all water/sewer usage less than 27,000 gallons	$87.000 /Quarter
Water/sewer usage over 27,000 gallons	$2.000 /kGal

UTILITY RATE ANALYSIS:
TOWN OF FRASER WATER/SEWER RATE
EAST GRAND SCHOOL DISTRICT, COLORADO
MAY 28, 2009

General

Water and sewer rate schedules and historical utility costs were reviewed for the performance contract proposal. Utilities considered were water and sewer. This page summarizes the "Municipal Water and Sewer Rates per Quarter" for the Town of Fraser, CO. The water rate applies to Fraser Valley Elementary School.

Water Rates

The Town of Fraser, CO provides water/sewer service to the Fraser Valley Elementary School according to the "Municipal Water and Sewer Charges per Quarter" water and sewer rate, which was in effect on January 1, 2009.

Base Rates

Water/Sewer

Water Rate	$115.500 /Quarter
Wastewater Rate	$105.000 /Quarter

General Service Rate - Microsoft Internet Explorer

File Edit View Favorites Tools Help

Address http://www.mpei.com/new-ratescommercialgeneralservice1.htm

Mountain Parks Electric

About MPEI
Billing
Energy Efficiency
Links
Member Benefits
Meter and Outage Info
New Construction
Products
Rates and Tariffs
Safety
Home

General Service Rate

Charge Description	Cost
Service Availability	$25.00
Energy	$0.087

BACK

Main Office - 321 West Agate Avenue, PO Box 170, Granby, Colorado 80446-0170
(970) 887-3378 - FAX (970) 887-3996 Denver Metro area - (303) 377-2525

Done Internet

start D:\My Files\Honey... Logbook4 - Oct 08... Inbox - Microsoft ... EGSD Utility Rate ... General Service R... 4:03 PM Thursday

Large Power Rate - Microsoft Internet Explorer

File Edit View Favorites Tools Help

Address http://www.mpei.com/new-ratescommerciallarge1.htm

Mountain Parks Electric

About MPEI
Billing
Energy Efficiency
Links
Member Benefits
Meter and Outage Info
New Construction
Products
Rates and Tariffs
Safety
Home

Large Power Rate

Charge Description	Cost
Service Availability	$88.40
Demand (per kW of peak)	$4.35
First 200 kWh Usage	$0.087
Next 200 kWh Usage	$0.059
Over 400 kWh Usage	$0.034

BACK

Main Office - 321 West Agate Avenue, PO Box 170, Granby, Colorado 80446-0170
(970) 887-3378 - FAX (970) 887-3996 Denver Metro area - (303) 377-2525
email us site map

Done Internet

start D:\My Files\Honey... Logbook4 - Oct 08... Inbox - Microsoft ... EGSD Utility Rate ... Large Power Rate... 4:06 PM Thursday

B. SUMMARY OF ALL UTILITY BILLS:

Two years worth of utility bills for all fuel types were requested and procured for each building included in the technical energy audit as available. Summaries of base year (December 2007- November 2008) utility bills for each building are provided on the following pages. Base year data did not differ significantly from data for other years (December 2006-November 2007).

Base Year Utility Report for Middle Park High School

Customer Name: East Grand School District
Facility Name: Middle Park High School
Base Year: Dec '07 - Nov '08
Conditioned Area: 92,860 square feet

	Jan	Feb	Mar	Apr	May	Jun	Jul	Aug	Sep	Oct	Nov	Dec	Annual
Weather Data													
Days in Month	31	29	31	30	31	30	31	31	30	31	30	31	366
Heating Degree Days	1558	1213	1059	804	549	244	37	81	323	688	962	1432	8951
Cooling Degree Days	0	0	0	0	0	0	7	12	0	0	0	0	19
Electrical Data													
kW-hrs Used	71,350	67,673	71,325	73,091	73,628	39,523	34,381	50,407	62,207	74,591	77,285	67,325	762,785
Daily Ave kW-hrs	2,302	2,334	2,301	2,436	2,375	1,317	1,109	1,626	2,074	2,406	2,576	2,172	2,084
$/kW-hr	$0.077	$0.080	$0.080	$0.081	$0.078	$0.096	$0.087	$0.086	$0.081	$0.080	$0.084	$0.078	$0.081
Daily kW-hr Cost	$176	$186	$183	$196	$184	$126	$97	$140	$167	$192	$217	$170	$169
Total kW-hr Cost	$5,467	$5,390	$5,687	$5,892	$5,716	$3,794	$2,994	$4,344	$5,021	$5,955	$6,519	$5,259	$62,036
kW Used	233	231	214	224	222	190	112	166	220	233	289	229	2564
$/kW	$4.35	$4.35	$4.35	$4.35	$4.35	$4.35	$4.35	$4.35	$4.35	$4.35	$4.35	$4.35	$4.35
Total Demand Cost	$1,014	$1,005	$929	$976	$967	$826	$488	$723	$958	$1,014	$1,258	$996	$11,154
Load Factor	41%	42%	45%	45%	45%	29%	41%	41%	39%	43%	37%	40%	41%
Total Electric Cost	$6,481	$6,395	$6,616	$6,868	$6,683	$4,620	$3,482	$5,067	$5,979	$6,969	$7,777	$6,254	$73,190
Daily Electric Cost	$209	$221	$213	$229	$216	$154	$112	$163	$199	$225	$259	$202	$200
Cost/Square Foot	$0.07	$0.07	$0.07	$0.07	$0.07	$0.05	$0.04	$0.05	$0.06	$0.08	$0.08	$0.07	$0.79
Fossil Fuel Data													
Therms Total	6,360	5,220	4,630	3,380	2,650	600	0	560	2,310	4,590	6,390	5,870	42,560
MMBTUs Total	636	522	463	338	265	60	0	56	231	459	639	587	4,256
Daily Ave MMBTUs	21	18	15	11	9	2	0	2	8	15	21	19	12
$/MMBTU	$7.33	$8.70	$9.56	$9.80	$11.17	$15.21	#DIV/0!	$13.02	$3.39	$4.21	$6.67	$7.62	$7.83
Daily MMBTU Cost	$150	$157	$143	$110	$96	$30	$10	$24	$26	$62	$142	$144	$91
Total MMBTU Cost	$4,661	$4,543	$4,425	$3,312	$2,961	$913	$321	$729	$784	$1,930	$4,264	$4,474	$33,317
Cost/Square Foot	$0.05	$0.05	$0.05	$0.04	$0.03	$0.01	$0.00	$0.01	$0.01	$0.02	$0.05	$0.05	$0.36
Energy Usage Indices													
Elec BTU/Sq Ft/Day	85	86	85	90	87	48	41	60	76	88	95	80	77
kW-hrs/Sq Ft/Month	0.8	0.7	0.8	0.8	0.8	0.4	0.4	0.5	0.7	0.8	0.8	0.7	0.7
Proj kW-hrs/Sq Ft/Yr	9.2	8.7	9.2	9.4	9.5	5.1	4.4	6.5	8.0	9.6	10.0	8.7	8.2
Fossil Fuel BTU/Sq Ft/Day	221	194	161	121	92	22	0	19	83	159	229	204	125
Fossil Fuel BTU/Sq Ft/Mnth	6,849	5,621	4,986	3,640	2,854	646	0	603	2,488	4,943	6,881	6,321	3,819
Proj FF Btu/Sq Ft/Year	82,188	67,456	59,832	43,679	34,245	7,754	0	7,237	29,851	59,315	82,576	75,856	45,832
Total BTUs/Sq Ft/Day	306	280	245	211	179	70	41	79	159	248	324	284	202
Energy Cost/Sq Ft	$0.12	$0.12	$0.12	$0.11	$0.10	$0.06	$0.04	$0.06	$0.07	$0.10	$0.13	$0.12	$1.15
EUI in BTUs/Sq Ft	9,471	8,108	7,607	6,326	5,559	2,098	1,263	2,455	4,773	7,684	9,721	8,795	73,860
Year to Date Usage	9,471	17,579	25,185	31,511	37,070	39,168	40,432	42,887	47,660	55,344	65,065	73,860	
Tot Energy & Demand Cost	$11,142	$10,938	$11,041	$10,180	$9,643	$5,533	$3,802	$5,796	$6,763	$8,899	$12,041	$10,729	$106,507
Year to Date Cost	$11,142	$22,080	$33,121	$43,300	$52,944	$58,477	$62,279	$68,075	$74,838	$83,737	$95,778	$106,507	

Base Year Utility Report for East Grand Middle School

Customer Name: East Grand School District
Facility Name: East Grand Middle School
Base Year: Dec '07 - Nov '08
Conditioned Area: 83.536 square feet

	Jan	Feb	Mar	Apr	May	Jun	Jul	Aug	Sep	Oct	Nov	Dec	Annual
Weather Data													
Days in Month	31	29	31	30	31	30	31	31	30	31	30	31	366
Heating Degree Days	1591	1306	1176	928	605	290	56	115	346	686	956	1495	9548
Cooling Degree Days	0	0	0	0	0	0	7	12	0	0	0	0	19
Electrical Data													
kW-hrs Used	94,400	84,720	75,760	68,607	62,640	37,440	39,763	51,909	67,273	73,739	71,303	86,180	813,733
Daily Ave kW-hrs	3,045	2,921	2,444	2,287	2,021	1,248	1,283	1,674	2,242	2,379	2,377	2,780	2,223
$/kW-hr	$0.074	$0.077	$0.078	$0.080	$0.079	$0.083	$0.084	$0.085	$0.077	$0.078	$0.078	$0.076	$0.078
Daily kW-hr Cost	$226	$224	$191	$184	$160	$104	$107	$142	$172	$185	$185	$211	$174
Total kW-hr Cost	$7,013	$6,490	$5,919	$5,509	$4,960	$3,126	$3,323	$4,390	$5,175	$5,738	$5,561	$6,556	$63,761
kW Used	242	229	223	218	210	148	153	206	221	224	234	239	2547
$/kW	$4.35	$4.35	$4.35	$4.35	$4.35	$4.35	$4.35	$4.35	$4.35	$4.35	$4.35	$4.35	$4.35
Total Demand Cost	$1,053	$996	$970	$948	$914	$644	$666	$896	$961	$974	$1,018	$1,040	$11,079
Load Factor	52%	53%	46%	44%	40%	35%	35%	34%	42%	44%	42%	48%	44%
Total Electric Cost	$8,066	$7,486	$6,889	$6,457	$5,874	$3,770	$3,988	$5,286	$6,136	$6,713	$6,578	$7,596	$74,840
Daily Electric Cost	$260	$258	$222	$215	$189	$126	$129	$171	$205	$217	$219	$245	$204
Cost/Square Foot	$0.10	$0.09	$0.08	$0.08	$0.07	$0.05	$0.05	$0.06	$0.07	$0.08	$0.08	$0.09	$0.90
Fossil Fuel Data													
Therms Total	6,760	6,080	5,650	5,410	3,690	2,400	1,980	2,120	2,610	5,450	4,520	6,590	53,260
MMBTUs Total	676	608	565	541	369	240	198	212	261	545	452	659	5,326
Daily Ave MMBTUs	22	21	18	18	12	8	6	7	9	18	15	21	15
$/MMBTU	$7.44	$8.69	$9.44	$9.66	$10.67	$10.85	$11.38	$8.64	$5.98	$5.08	$4.62	$7.46	$8.04
Daily MMBTU Cost	$162	$182	$172	$174	$127	$87	$73	$59	$52	$89	$70	$159	$117
Total MMBTU Cost	$5,028	$5,283	$5,332	$5,224	$3,937	$2,604	$2,252	$1,832	$1,560	$2,766	$2,090	$4,915	$42,825
Cost/Square Foot	$0.06	$0.06	$0.06	$0.06	$0.05	$0.03	$0.03	$0.02	$0.02	$0.03	$0.03	$0.06	$0.51
Energy Usage Indices													
Elec BTU/Sq Ft/Day	124	119	100	93	83	51	52	68	92	97	97	114	91
kW-hrs/Sq Ft/Month	1.1	1.0	0.9	0.8	0.7	0.4	0.5	0.6	0.8	0.9	0.9	1.0	0.8
Proj kW-hrs/Sq Ft/Yr	13.6	12.2	10.9	9.9	9.0	5.4	5.7	7.5	9.7	10.6	10.2	12.4	9.7
Fossil Fuel BTU/Sq Ft/Day	261	251	218	216	142	96	76	82	104	210	180	254	174
Fossil Fuel BTU/Sq Ft/Mnth	8,092	7,278	6,764	6,476	4,417	2,873	2,370	2,538	3,124	6,524	5,411	7,889	5,313
Proj FF Btu/Sq Ft/Year	97,108	87,340	81,163	77,715	53,007	34,476	28,443	30,454	37,493	78,290	64,930	94,666	63,757
Total BTUs/Sq Ft/Day	385	370	318	309	225	147	129	150	196	308	277	368	265
Energy Cost/Sq Ft	$0.16	$0.15	$0.15	$0.14	$0.12	$0.08	$0.07	$0.09	$0.09	$0.11	$0.10	$0.15	$1.41
EUI in BTUs/Sq Ft	11,948	10,739	9,858	9,278	6,976	4,402	3,994	4,658	5,872	9,536	8,323	11,409	96,994
Year to Date Usage	11,948	22,687	32,545	41,823	48,799	53,201	57,195	61,853	67,726	77,262	85,585	96,994	
Tot Energy & Demand Cost	$13,094	$12,769	$12,222	$11,681	$9,811	$6,374	$6,241	$7,119	$7,696	$9,479	$8,669	$12,511	$117,665
Year to Date Cost	$13,094	$25,864	$38,085	$49,766	$59,577	$65,952	$72,192	$79,311	$87,007	$96,486	$105,154	$117,665	

Base Year Utility Report for Fraser Valley Elementary School

Customer Name: East Grand School District
Facility Name: Fraser Valley Elementary School
Base Year: Dec '07 - Nov '08
Conditioned Area: 36,910 square feet

	Jan	Feb	Mar	Apr	May	Jun	Jul	Aug	Sep	Oct	Nov	Dec	Annual
Weather Data													
Days in Month	31	29	31	30	31	30	31	31	30	31	30	31	366
Heating Degree Days	1591	1306	1176	928	605	290	56	115	346	686	956	1495	9548
Cooling Degree Days	0	0	0	0	0	0	7	12	0	0	0	0	19
Electrical Data													
kW-hrs Used	47,443	40,712	40,160	40,080	21,840	11,143	17,794	33,935	43,680	48,360	45,640	42,562	433,349
Daily Ave kW-hrs	1,530	1,404	1,295	1,336	705	371	574	1,095	1,456	1,560	1,521	1,373	1,184
$/kW-hr	$0.079	$0.074	$0.076	$0.075	$0.088	$0.076	$0.095	$0.080	$0.077	$0.075	$0.079	$0.070	$0.077
Daily kW-hr Cost	$121	$104	$98	$100	$62	$28	$54	$88	$111	$117	$121	$96	$92
Total kW-hr Cost	$3,749	$3,021	$3,046	$2,996	$1,923	$852	$1,685	$2,716	$3,344	$3,629	$3,623	$2,985	$33,569
kW Used	110	107	105	99	98	37	62	108	121	123	128	112	1208
$/kW	$4.35	$4.35	$4.35	$4.35	$4.35	$4.35	$4.35	$4.35	$4.35	$4.35	$4.35	$4.35	$4.35
Total Demand Cost	$479	$463	$457	$431	$424	$160	$270	$468	$527	$534	$556	$487	$5,255
Load Factor	58%	55%	51%	56%	30%	42%	39%	42%	50%	53%	50%	51%	49%
Total Electric Cost	$4,227	$3,484	$3,503	$3,426	$2,347	$1,012	$1,955	$3,184	$3,871	$4,164	$4,179	$3,472	$38,825
Daily Electric Cost	$136	$120	$113	$114	$76	$34	$63	$103	$129	$134	$139	$112	$106
Cost/Square Foot	$0.11	$0.09	$0.09	$0.09	$0.06	$0.03	$0.05	$0.09	$0.10	$0.11	$0.11	$0.09	$1.05
Fossil Fuel Data													
Therms Total	3,600	3,220	3,410	3,080	2,670	2,080	0	0	1,900	4,200	5,900	3,610	33,670
MMBTUs Total	360	322	341	308	267	208	0	0	190	420	590	361	3,367
Daily Ave MMBTUs	12	11	11	10	9	7	0	0	6	14	20	12	9
$/MMBTU	$7.65	$8.80	$9.74	$9.56	$10.96	$10.90	#DIV/0!	#DIV/0!	$6.25	$5.17	$4.98	$7.76	$7.90
Daily MMBTU Cost	$89	$98	$107	$98	$94	$76	$7	$8	$40	$70	$98	$90	$73
Total MMBTU Cost	$2,753	$2,834	$3,321	$2,945	$2,926	$2,267	$207	$256	$1,187	$2,173	$2,940	$2,801	$26,611
Cost/Square Foot	$0.07	$0.08	$0.09	$0.08	$0.08	$0.06	$0.01	$0.01	$0.03	$0.06	$0.08	$0.08	$0.72
Energy Usage Indices													
Elec BTU/Sq Ft/Day	141	130	120	124	65	34	53	101	135	144	141	127	109
kW-hrs/Sq Ft/Month	1.3	1.1	1.1	1.1	0.6	0.3	0.5	0.9	1.2	1.3	1.2	1.2	1.0
Proj kW-hrs/Sq Ft/Yr	15.4	13.2	13.1	13.0	7.1	3.6	5.8	11.0	14.2	15.7	14.8	13.8	11.7
Fossil Fuel BTU/Sq Ft/Day	315	301	298	278	233	188	0	0	172	367	533	316	249
Fossil Fuel BTU/Sq Ft/Mnth	9,753	8,724	9,239	8,345	7,234	5,635	0	0	5,148	11,379	15,985	9,781	7,602
Proj FF Btu/Sq Ft/Year	117,041	104,687	110,864	100,135	86,806	67,624	0	0	61,772	136,548	191,818	117,367	91,222
Total BTUs/Sq Ft/Day	456	431	418	402	298	222	53	101	306	511	673	442	359
Energy Cost/Sq Ft	$0.19	$0.17	$0.18	$0.17	$0.14	$0.09	$0.06	$0.09	$0.14	$0.17	$0.19	$0.17	$1.77
EUI in BTUs/Sq Ft	14,139	12,487	12,951	12,050	9,253	6,665	1,645	3,137	9,185	15,849	20,204	13,715	131,281
Year to Date Usage	14,139	26,627	39,578	51,627	60,880	67,545	69,190	72,327	81,513	97,362	117,566	131,281	
Tot Energy & Demand Cost	$6,980	$6,318	$6,824	$6,371	$5,273	$3,279	$2,162	$3,441	$5,059	$6,336	$7,119	$6,273	$65,436
Year to Date Cost	$6,980	$13,298	$20,121	$26,493	$31,766	$35,045	$37,207	$40,648	$45,707	$52,043	$59,162	$65,436	

Base Year Utility Report for Granby Elementary School

Customer Name: East Grand School District
Facility Name: Granby Elementary School
Base Year: Dec '07 - Nov '08
Conditioned Area: 45,779 square feet

	Jan	Feb	Mar	Apr	May	Jun	Jul	Aug	Sep	Oct	Nov	Dec	Annual
Weather Data													
Days in Month	31	29	31	30	31	30	31	31	30	31	30	31	366
Heating Degree Days	1591	1306	1176	928	605	290	56	115	346	686	956	1495	9548
Cooling Degree Days	0	0	0	0	0	0	7	12	0	0	0	0	19
Electrical Data													
kW-hrs Used	25,920	26,000	22,320	22,841	19,520	9,135	8,039	22,021	29,745	30,720	29,360	22,010	267,632
Daily Ave kW-hrs	836	897	720	761	630	305	259	710	992	991	979	710	731
$/kW-hr	$0.086	$0.087	$0.091	$0.092	$0.090	$0.097	$0.101	$0.089	$0.081	$0.083	$0.084	$0.090	$0.088
Daily kW-hr Cost	$72	$78	$65	$70	$57	$30	$26	$63	$81	$83	$83	$64	$64
Total kW-hr Cost	$2,219	$2,256	$2,025	$2,091	$1,752	$888	$811	$1,955	$2,418	$2,563	$2,479	$1,985	$23,442
kW Used	105	103	101	103	89	46	39	91	111	115	115	102	1118
$/kW	$4.35	$4.35	$4.35	$4.35	$4.35	$4.35	$4.35	$4.35	$4.35	$4.35	$4.35	$4.35	$4.35
Total Demand Cost	$455	$448	$437	$448	$385	$198	$167	$395	$485	$502	$498	$444	$4,862
Load Factor	33%	36%	30%	31%	30%	28%	28%	33%	37%	36%	36%	29%	33%
Total Electric Cost	$2,674	$2,704	$2,462	$2,539	$2,137	$1,086	$979	$2,350	$2,902	$3,065	$2,977	$2,429	$28,304
Daily Electric Cost	$86	$93	$79	$85	$69	$36	$32	$76	$97	$99	$99	$78	$77
Cost/Square Foot	$0.06	$0.06	$0.05	$0.06	$0.05	$0.02	$0.02	$0.05	$0.06	$0.07	$0.07	$0.05	$0.62
Fossil Fuel Data													
Therms Total	3,080	2,630	2,660	1,910	1,200	420	60	470	810	1,660	2,400	2,880	20,180
MMBTUs Total	308	263	266	191	120	42	6	47	81	166	240	288	2,018
Daily Ave MMBTUs	10	9	9	6	4	1	0	2	3	5	8	9	6
$/MMBTU	$7.63	$8.94	$9.69	$10.02	$11.66	$14.65	$42.68	$11.52	$7.35	$5.86	$4.99	$7.69	$8.42
Daily MMBTU Cost	$76	$81	$83	$64	$45	$21	$8	$17	$20	$31	$40	$71	$46
Total MMBTU Cost	$2,351	$2,351	$2,577	$1,914	$1,399	$615	$256	$542	$596	$974	$1,198	$2,215	$16,988
Cost/Square Foot	$0.05	$0.05	$0.06	$0.04	$0.03	$0.01	$0.01	$0.01	$0.01	$0.02	$0.03	$0.05	$0.37
Energy Usage Indices													
Elec BTU/Sq Ft/Day	62	67	54	57	47	23	19	53	74	74	73	53	55
kW-hrs/Sq Ft/Month	0.6	0.6	0.5	0.5	0.4	0.2	0.2	0.5	0.6	0.7	0.6	0.5	0.5
Proj kW-hrs/Sq Ft/Yr	6.8	6.8	5.9	6.0	5.1	2.4	2.1	5.8	7.8	8.1	7.7	5.8	5.8
Fossil Fuel BTU/Sq Ft/Day	217	198	187	139	85	31	4	33	59	117	175	203	120
Fossil Fuel BTU/Sq Ft/Mnth	6,728	5,745	5,811	4,172	2,621	917	131	1,027	1,769	3,626	5,243	6,291	3,673
Proj FF Btu/Sq Ft/Year	80,736	68,940	69,726	50,067	31,455	11,009	1,573	12,320	21,232	43,513	62,911	75,493	44,081
Total BTUs/Sq Ft/Day	279	265	241	196	131	53	24	86	133	191	248	256	175
Energy Cost/Sq Ft	$0.11	$0.11	$0.11	$0.10	$0.08	$0.04	$0.03	$0.06	$0.08	$0.09	$0.09	$0.10	$0.99
EUI in BTUs/Sq Ft	8,660	7,683	7,474	5,875	4,076	1,598	730	2,668	3,986	5,916	7,431	7,932	64,028
Year to Date Usage	8,660	16,343	23,817	29,691	33,768	35,366	36,096	38,764	42,750	48,666	56,097	64,028	
Tot Energy & Demand Cost	$5,025	$5,055	$5,039	$4,453	$3,536	$1,701	$1,235	$2,891	$3,498	$4,038	$4,175	$4,644	$45,292
Year to Date Cost	$5,025	$10,081	$15,120	$19,573	$23,109	$24,810	$26,045	$28,936	$32,434	$36,472	$40,648	$45,292	

Base Year Utility Report for Grand Lake Elementary School

Customer Name: East Grand School District
Facility Name: Grand Lake Elementary School
Base Year: Dec '07 - Nov '08
Conditioned Area: 19,000 square feet

	Jan	Feb	Mar	Apr	May	Jun	Jul	Aug	Sep	Oct	Nov	Dec	Annual
Weather Data													
Days in Month	31	29	31	30	31	30	31	31	30	31	30	31	366
Heating Degree Days	1591	1306	1176	928	605	290	56	115	346	686	956	1495	9548
Cooling Degree Days	0	0	0	0	0	0	7	12	0	0	0	0	19
Electrical Data													
kW-hrs Used	13,200	12,926	12,245	11,600	11,491	5,600	6,944	6,927	11,418	12,000	11,200	10,960	126,510
Daily Ave kW-hrs	426	446	395	387	371	187	224	223	381	387	373	354	346
$/kW-hr	$0.090	$0.091	$0.091	$0.094	$0.093	$0.101	$0.096	$0.101	$0.089	$0.089	$0.092	$0.096	$0.093
Daily kW-hr Cost	$38	$41	$36	$36	$35	$19	$22	$22	$34	$35	$34	$34	$32
Total kW-hr Cost	$1,183	$1,180	$1,114	$1,093	$1,071	$564	$667	$697	$1,015	$1,074	$1,031	$1,047	$11,738
kW Used	56	52	53	53	52	26	29	47	51	50	50	53	573
$/kW	$4.35	$4.35	$4.35	$4.35	$4.35	$4.35	$4.35	$4.35	$4.35	$4.35	$4.35	$4.35	$4.35
Total Demand Cost	$246	$228	$230	$233	$227	$113	$125	$205	$223	$215	$219	$228	$2,491
Load Factor	31%	35%	31%	30%	30%	30%	33%	20%	31%	33%	31%	28%	30%
Total Electric Cost	$1,429	$1,408	$1,344	$1,325	$1,299	$678	$792	$902	$1,239	$1,289	$1,250	$1,275	$14,229
Daily Electric Cost	$46	$49	$43	$44	$42	$23	$26	$29	$41	$42	$42	$41	$39
Cost/Square Foot	$0.08	$0.07	$0.07	$0.07	$0.07	$0.04	$0.04	$0.05	$0.07	$0.07	$0.07	$0.07	$0.75
Fossil Fuel Data													
Therms Total	1,900	1,570	1,540	1,250	820	390	140	310	670	1,120	1,450	1,780	12,940
MMBTUs Total	190	157	154	125	82	39	14	31	67	112	145	178	1,294
Daily Ave MMBTUs	6	5	5	4	3	1	0	1	2	4	5	6	4
$/MMBTU	$7.73	$9.07	$9.87	$10.17	$11.84	$13.57	$20.42	$12.21	$7.10	$5.97	$5.13	$7.89	$8.61
Daily MMBTU Cost	$47	$49	$49	$42	$31	$18	$9	$12	$16	$22	$25	$45	$30
Total MMBTU Cost	$1,468	$1,425	$1,521	$1,271	$971	$529	$286	$379	$476	$669	$744	$1,405	$11,143
Cost/Square Foot	$0.08	$0.07	$0.08	$0.07	$0.05	$0.03	$0.02	$0.02	$0.03	$0.04	$0.04	$0.07	$0.59
Energy Usage Indices													
Elec BTU/Sq Ft/Day	76	80	71	69	67	34	40	40	68	70	67	63	62
kW-hrs/Sq Ft/Month	0.7	0.7	0.6	0.6	0.6	0.3	0.4	0.4	0.6	0.6	0.6	0.6	0.6
Proj kW-hrs/Sq Ft/Yr	8.3	8.2	7.7	7.3	7.3	3.5	4.4	4.4	7.2	7.6	7.1	6.9	6.7
Fossil Fuel BTU/Sq Ft/Day	323	285	261	219	139	68	24	53	118	190	254	302	186
Fossil Fuel BTU/Sq Ft/Mnth	10,000	8,263	8,105	6,579	4,316	2,053	737	1,632	3,526	5,895	7,632	9,368	5,675
Proj FF Btu/Sq Ft/Year	120,000	99,158	97,263	78,947	51,789	24,632	8,842	19,579	42,316	70,737	91,579	112,421	68,105
Total BTUs/Sq Ft/Day	399	365	332	289	206	102	64	93	186	260	321	366	248
Energy Cost/Sq Ft	$0.15	$0.15	$0.15	$0.14	$0.12	$0.06	$0.06	$0.07	$0.09	$0.10	$0.10	$0.14	$1.34
EUI in BTUs/Sq Ft	12,370	10,584	10,304	8,662	6,379	3,058	1,984	2,876	5,577	8,050	9,643	11,337	90,824
Year to Date Usage	12,370	22,955	33,259	41,921	48,300	51,359	53,342	56,218	61,795	69,844	79,487	90,824	
Tot Energy & Demand Cost	$2,897	$2,833	$2,865	$2,596	$2,269	$1,207	$1,078	$1,280	$1,715	$1,958	$1,994	$2,680	$25,372
Year to Date Cost	$2,897	$5,730	$8,594	$11,191	$13,460	$14,667	$15,745	$17,025	$18,740	$20,698	$22,692	$25,372	

Base Year Utility Report for Indian Peaks Charter School

Customer Name: East Grand School District
Facility Name: Indian Peaks Charter School
Base Year: Dec '07 - Nov '08
Conditioned Area: 2,880 square feet

	Jan	Feb	Mar	Apr	May	Jun	Jul	Aug	Sep	Oct	Nov	Dec	Annual
Weather Data													
Days in Month	31	29	31	30	31	30	31	31	30	31	30	31	366
Heating Degree Days	1591	1306	1176	928	605	290	56	115	346	686	956	1495	9548
Cooling Degree Days	0	0	0	0	0	0	7	12	0	0	0	0	19
Electrical Data													
kW-hrs Used	6,103	5,832	5,525	5,234	3,733	1,819	2,256	2,172	3,848	5,009	5,499	5,974	53,007
Daily Ave kW-hrs	197	201	178	174	120	61	73	70	128	162	183	193	145
$/kW-hr	$0.091	$0.094	$0.092	$0.099	$0.104	$0.135	$0.115	$0.116	$0.093	$0.092	$0.092	$0.091	$0.097
Daily kW-hr Cost	$18	$19	$16	$17	$13	$8	$8	$8	$12	$15	$17	$18	$14
Total kW-hr Cost	$556	$546	$508	$518	$389	$246	$260	$251	$358	$461	$503	$544	$5,140
Total Electric Cost	$556	$546	$508	$518	$389	$246	$260	$251	$358	$461	$503	$544	$5,140
Daily Electric Cost	$18	$19	$16	$17	$13	$8	$8	$8	$12	$15	$17	$18	$14
Cost/Square Foot	$0.19	$0.19	$0.18	$0.18	$0.13	$0.09	$0.09	$0.09	$0.12	$0.16	$0.17	$0.19	$1.78
Fossil Fuel Data													
Therms Total	431	356	350	284	72	3	0	1	59	225	378	404	2,564
MMBTUs Total	43	36	35	28	7	0	0	0	6	23	38	40	256
Daily Ave MMBTUs	1	1	1	1	0	0	0	0	0	1	1	1	1
$/MMBTU	$9.27	$10.06	$10.75	$11.75	$15.11	$88.77	#DIV/0!	$237.20	$10.29	$8.23	$7.97	$8.92	$9.90
Daily MMBTU Cost	$13	$12	$12	$11	$4	$1	$0	$1	$2	$6	$10	$12	$7
Total MMBTU Cost	$400	$358	$376	$333	$109	$28	$0	$25	$61	$185	$301	$361	$2,537
Cost/Square Foot	$0.14	$0.12	$0.13	$0.12	$0.04	$0.01	$0.00	$0.01	$0.02	$0.06	$0.10	$0.13	$0.88
Energy Usage Indices													
Elec BTU/Sq Ft/Day	233	238	211	207	143	72	86	83	152	191	217	228	172
kW-hrs/Sq Ft/Month	2.1	2.0	1.9	1.8	1.3	0.6	0.8	0.8	1.3	1.7	1.9	2.1	1.5
Proj kW-hrs/Sq Ft/Yr	25.4	24.3	23.0	21.8	15.6	7.6	9.4	9.1	16.0	20.9	22.9	24.9	18.4
Fossil Fuel BTU/Sq Ft/Day	483	427	392	328	81	4	0	1	68	252	438	453	243
Fossil Fuel BTU/Sq Ft/Mnth	14,974	12,373	12,137	9,851	2,509	108	0	37	2,050	7,813	13,132	14,028	7,418
Proj FF Btu/Sq Ft/Year	179,688	148,479	145,642	118,216	30,104	1,293	0	445	24,597	93,750	157,589	168,339	89,012
Total BTUs/Sq Ft/Day	716	665	603	535	224	75	86	84	220	443	655	681	415
Energy Cost/Sq Ft	$0.33	$0.31	$0.31	$0.30	$0.17	$0.09	$0.09	$0.10	$0.15	$0.22	$0.28	$0.31	$2.67
EUI in BTUs/Sq Ft	22,204	19,283	18,683	16,052	6,932	2,263	2,673	2,611	6,609	13,747	19,647	21,106	151,810
Year to Date Usage	22,204	41,487	60,170	76,222	83,154	85,417	88,090	90,701	97,310	111,057	130,704	151,810	
Tot Energy & Demand Cost	$956	$904	$884	$852	$498	$273	$260	$277	$419	$646	$805	$905	$7,677
Year to Date Cost	$956	$1,860	$2,744	$3,595	$4,093	$4,366	$4,626	$4,902	$5,321	$5,967	$6,772	$7,677	

Base Year Utility Report for District Office

Customer Name: East Grand School District
Facility Name: District Office
Base Year: Dec '07 - Nov '08
Conditioned Area: 12,706 square feet

	Jan	Feb	Mar	Apr	May	Jun	Jul	Aug	Sep	Oct	Nov	Dec	Annual
Weather Data													
Days in Month	31	29	31	30	31	30	31	31	30	31	30	31	366
Heating Degree Days	1591	1306	1176	928	605	290	56	115	346	686	956	1495	9548
Cooling Degree Days	0	0	0	0	0	0	7	12	0	0	0	0	19
Electrical Data													
kW-hrs Used	6,423	6,026	5,900	4,978	4,647	4,605	4,541	5,352	5,139	5,612	5,562	5,707	64,493
Daily Ave kW-hrs	207	208	190	166	150	154	146	173	171	181	185	184	176
$/kW-hr	$0.091	$0.093	$0.093	$0.093	$0.092	$0.093	$0.092	$0.092	$0.092	$0.092	$0.091	$0.093	$0.092
Daily kW-hr Cost	$19	$19	$18	$15	$14	$14	$13	$16	$16	$17	$17	$17	$16
Total kW-hr Cost	$582	$560	$551	$464	$429	$427	$418	$492	$472	$515	$504	$529	$5,943
Total Electric Cost	$582	$560	$551	$464	$429	$427	$418	$492	$472	$515	$504	$529	$5,943
Daily Electric Cost	$19	$19	$18	$15	$14	$14	$13	$16	$16	$17	$17	$17	$16
Cost/Square Foot	$0.05	$0.04	$0.04	$0.04	$0.03	$0.03	$0.03	$0.04	$0.04	$0.04	$0.04	$0.04	$0.47
Fossil Fuel Data													
Therms Total	1,132	1,087	1,025	801	420	247	131	134	155	394	706	1,009	7,239
MMBTUs Total	113	109	103	80	42	25	13	13	15	39	71	101	724
Daily Ave MMBTUs	4	4	3	3	1	1	0	0	1	1	2	3	2
$/MMBTU	$8.11	$8.74	$8.94	$9.23	$10.62	$11.81	$12.26	$12.26	$11.77	$7.45	$7.38	$7.77	$8.79
Daily MMBTU Cost	$30	$33	$30	$25	$14	$10	$5	$5	$6	$9	$17	$25	$17
Total MMBTU Cost	$917	$949	$916	$740	$445	$292	$160	$164	$182	$294	$521	$784	$6,364
Cost/Square Foot	$0.07	$0.07	$0.07	$0.06	$0.04	$0.02	$0.01	$0.01	$0.01	$0.02	$0.04	$0.06	$0.50
Energy Usage Indices													
Elec BTU/Sq Ft/Day	56	56	51	45	40	41	39	46	46	49	50	49	47
kW-hrs/Sq Ft/Month	0.5	0.5	0.5	0.4	0.4	0.4	0.4	0.4	0.4	0.4	0.4	0.4	0.4
Proj kW-hrs/Sq Ft/Yr	6.1	5.7	5.6	4.7	4.4	4.3	4.3	5.1	4.9	5.3	5.3	5.4	5.1
Fossil Fuel BTU/Sq Ft/Day	287	295	260	210	107	65	33	34	41	100	185	256	156
Fossil Fuel BTU/Sq Ft/Mnth	8,905	8,551	8,068	6,304	3,302	1,946	1,029	1,052	1,219	3,101	5,557	7,940	4,748
Proj FF Btu/Sq Ft/Year	106,863	102,616	96,811	75,649	39,622	23,350	12,351	12,620	14,624	37,211	66,684	95,277	56,973
Total BTUs/Sq Ft/Day	343	351	311	255	147	106	73	80	87	149	235	306	203
Energy Cost/Sq Ft	$0.12	$0.12	$0.12	$0.09	$0.07	$0.06	$0.05	$0.05	$0.05	$0.06	$0.08	$0.10	$0.97
EUI in BTUs/Sq Ft	10,630	10,169	9,652	7,641	4,550	3,182	2,249	2,489	2,599	4,608	7,051	9,472	74,292
Year to Date Usage	10,630	20,800	30,452	38,093	42,642	45,825	48,073	50,562	53,161	57,769	64,819	74,292	
Tot Energy & Demand Cost	$1,499	$1,509	$1,468	$1,204	$874	$719	$578	$656	$654	$809	$1,024	$1,313	$12,307
Year to Date Cost	$1,499	$3,008	$4,476	$5,679	$6,553	$7,273	$7,851	$8,507	$9,161	$9,970	$10,994	$12,307	

Base Year Utility Report for Transportation Facility

Customer Name: East Grand School District
Facility Name: Transportation Facility
Base Year: Dec '07 - Nov '08
Conditioned Area: 20,500 square feet

	Jan	Feb	Mar	Apr	May	Jun	Jul	Aug	Sep	Oct	Nov	Dec	Annual
Weather Data													
Days in Month	31	29	31	30	31	30	31	31	30	31	30	31	366
Heating Degree Days	1591	1306	1176	928	605	290	56	115	346	686	956	1495	9548
Cooling Degree Days	0	0	0	0	0	0	7	12	0	0	0	0	19
Electrical Data													
kW-hrs Used	7,622	6,608	8,313	5,748	4,979	3,986	3,902	4,703	5,340	5,730	7,168	6,634	70,734
Daily Ave kW-hrs	246	228	268	192	161	133	126	152	178	185	239	214	193
$/kW-hr	$0.090	$0.093	$0.092	$0.091	$0.092	$0.094	$0.093	$0.093	$0.092	$0.092	$0.090	$0.092	$0.092
Daily kW-hr Cost	$22	$21	$25	$17	$15	$12	$12	$14	$16	$17	$21	$20	$18
Total kW-hr Cost	$686	$612	$762	$524	$457	$374	$362	$436	$490	$525	$643	$611	$6,483
Total Electric Cost	$686	$612	$762	$524	$457	$374	$362	$436	$490	$525	$643	$611	$6,483
Daily Electric Cost	$22	$21	$25	$17	$15	$12	$12	$14	$16	$17	$21	$20	$18
Cost/Square Foot	$0.03	$0.03	$0.04	$0.03	$0.02	$0.02	$0.02	$0.02	$0.02	$0.03	$0.03	$0.03	$0.32
Fossil Fuel Data													
Therms Total	3,670	2,840	2,220	1,680	720	150	10	0	0	1,220	2,340	3,330	18,180
MMBTUs Total	367	284	222	168	72	15	1	0	0	122	234	333	1,818
Daily Ave MMBTUs	12	10	7	6	2	1	0	0	0	4	8	11	5
$/MMBTU	$7.68	$8.88	$9.75	$10.26	$12.41	$21.64	$191.43	#DIV/0!	#DIV/0!	$6.17	$4.98	$7.51	$8.48
Daily MMBTU Cost	$91	$87	$70	$57	$29	$11	$6	$6	$6	$24	$39	$81	$42
Total MMBTU Cost	$2,819	$2,521	$2,166	$1,723	$894	$325	$191	$182	$182	$753	$1,164	$2,502	$15,421
Cost/Square Foot	$0.14	$0.12	$0.11	$0.08	$0.04	$0.02	$0.01	$0.01	$0.01	$0.04	$0.06	$0.12	$0.75
Energy Usage Indices													
Elec BTU/Sq Ft/Day	41	38	45	32	27	22	21	25	30	31	40	36	32
kW-hrs/Sq Ft/Month	0.4	0.3	0.4	0.3	0.2	0.2	0.2	0.2	0.3	0.3	0.3	0.3	0.3
Proj kW-hrs/Sq Ft/Yr	4.5	3.9	4.9	3.4	2.9	2.3	2.3	2.8	3.1	3.4	4.2	3.9	3.5
Fossil Fuel BTU/Sq Ft/Day	577	478	349	273	113	24	2	0	0	192	380	524	242
Fossil Fuel BTU/Sq Ft/Mnth	17,902	13,854	10,829	8,195	3,512	732	49	0	0	5,951	11,415	16,244	7,390
Proj FF Btu/Sq Ft/Year	214,829	166,244	129,951	98,341	42,146	8,780	585	0	0	71,415	136,976	194,927	88,683
Total BTUs/Sq Ft/Day	618	516	394	305	140	47	23	25	30	223	420	560	274
Energy Cost/Sq Ft	$0.17	$0.15	$0.14	$0.11	$0.07	$0.03	$0.03	$0.03	$0.03	$0.06	$0.09	$0.15	$1.07
EUI in BTUs/Sq Ft	19,171	14,953	12,213	9,152	4,341	1,395	698	783	889	6,905	12,608	17,348	100,456
Year to Date Usage	19,171	34,125	46,337	55,489	59,830	61,225	61,924	62,706	63,595	70,500	83,108	100,456	
Tot Energy & Demand Cost	$3,505	$3,133	$2,928	$2,248	$1,351	$698	$554	$618	$671	$1,278	$1,808	$3,113	$21,904
Year to Date Cost	$3,505	$6,638	$9,566	$11,813	$13,164	$13,862	$14,416	$15,034	$15,705	$16,983	$18,791	$21,904	

C. IDENTIFICATION & DEFINITION OF BASE YEAR:

The base year for all buildings included in the Technical Energy Audit is defined as December 2007 – November 2008. Middle Park High School, Fraser Valley Elementary School, and Granby Elementary School all had building additions constructed in 2008 with occupancy and full operations not occurring until the November – December time frame. The only building that experienced a significant change in square footage through the construction of an additional modular building on the site is Indian Peaks Charter School, however, since the building was occupied and under full operations beginning in September of 2008 the effect on base year consumption was limited to three months. We did adjust electric and natural gas consumption for the first nine months of the base year to reflect the increase in square footage that occurred there in September 2008.

The base year provides a basis for performing energy end use analysis a) to understand how energy is used in a given building and b) to identify savings opportunities during the early stages of an energy audit. Projected energy unit savings are compared to base year energy consumption to ensure that the projected savings are reasonable.

Base year utility rates refer to the rates in effect at the time of the Technical Energy Audit, and are not necessarily equal to the average utility rates for the base year. Base year utility rates are used to project energy cost savings for the first year of the performance period. Energy cost savings for the remainder of the performance period will be calculated annually using the base year utility rates escalated by 4.25% per year.

"Whole building" energy models were developed for five of the buildings included in the Technical Energy Audit using Trane Trace 700 program. Trane trace 700 uses "typical meteorological year" weather files rather than weather data files for a particular year. Therefore, utility data for buildings modeled using Trane Trace 700 were averaged for a two year period in order to calibrate the Trane Trace 700 models for those buildings. These two year averages were also used as the basis of energy end use analysis for those buildings.

D. ESTIMATED END USE CONSUMPTION OF BASE YEAR:

We have developed energy end use pie charts for each building included in the Technical Energy Audit, which are presented in the appendix. These charts are based on either base year energy use or (in the case of buildings modeled using Trane Trace 700) annual average energy use for the two year period from December 2006 – November 2008. Energy is apportioned to the various end uses based on equipment surveys, data logger results, and interviews with facility maintenance staff.

End-use pie charts for each building and energy type are provided in the appendix.

3. ECM DESCRIPTIONS

NOTE: SEE SECTION 6 MISCELLANEOUS FOR COMMISSIONING AND M&V PLAN DESCRIPTIONS.

ECM 1.1: BOILER PLANT UPGRADES

- EXISTING CONDITIONS

The boiler at Grand Lake Elementary School is 20 years old and approaching the end of its useful service life. The boiler provides heating water to the entire school and is a single boiler with no redundancy. Should the boiler fail, an increasingly likely prospect as it ages, there is no secondary means of providing heat to the building to prevent pipes from freezing. In addition, annual maintenance costs to service the boiler warrant replacement.

Fraser Valley Elementary School has two boiler plants, a new plant installed in 2008 that serves the 1998 and 2008 building additions, and a boiler plant that serves the old original portion of the school. The boiler plant that serves the original school is a single gas-fired boiler with a manufacturer date of 1998. Because the old boiler plant boiler is at an estimated half of it's approximate useful service life the decision was made with the customer to cross-connect the two boiler plants to provide redundancy to the single boiler plant rather than replace the existing boiler or add a boiler to the old plant. This measure will provide much needed redundancy to the single boiler plant at a cost reduction to the customer in lieu of installing an additional boiler at the single boiler plant.

- DESCRIPTION OF EQUIPMENT TO BE INSTALLED

<u>Grand Lake Elementary School:</u>
We will provide and install two, forced draft, natural gas-fired heating water boilers. The boilers will be located in the existing mechanical room currently housing the old boiler which will be demolished. The boilers will be integrated into the existing building automation system (BAS). Final design documents will be developed by an engineer licensed in the State of Colorado and will be available for review by the East Grand School District prior to beginning of installation. This measure will result in improved comfort, equipment reliability, and redundancy of the heating system should one boiler require maintenance or service. Additional detail follows.

We will:

1. Demolish existing boiler, burner, & flue through the roof. Demolish existing in-line circulating pumps and piping within the boiler room to accommodate new piping to connect to existing pipe tie-ins. Demolish existing air separator and expansion tank. Remove all demolished equipment, piping, valves, etc and dispose of properly.
2. Provide and install two (2) Buderus Cast Iron Boilers, model G315/9, 924 MBH input capacity and 768 MBH output capacity, each with a Riello burner Model 40G900. Extend or provide new concrete housekeeping pad to support boilers.
3. Provide and install new gas vent flue and barometric draft dampers as necessary. Reuse existing roof penetration for flue or provide new and patch, repair, and seal all roof penetrations to match roof construction.
4. Include factory start-up of new boilers.

5. Provide and install two in-line boiler circulating pumps per boiler manufacturer's recommendations. Provide and install two Bell & Gossett Series 90 Model 1-1/2AA, 3450 RPM, 2 hp in-line system circulating pumps with a pumping capacity of 75 GPM @ 55 feet of head each.
6. Provide and install Bell & Gossett Air Separator Rolairtrol Model R-2-1/2. Provide and install a diaphragm expansion tank to match the system acceptance volume of the existing tank to be demolished.
7. Provide and install all necessary valves & piping appurtenances as necessary to provide a working and functioning system. Make new piping connections to existing natural gas piping, hydronic supply and return piping, and cold water make-up piping.
8. Connect the two new boiler circulating pumps to existing electrical panel inside the boiler room. Connect two new system circulating pumps to existing magnetic starters in the electrical switchgear located in the boiler room.
9. Integrate new boilers into existing Honeywell EBI BAS. Points to integrate include:
    a. DO Enable for each Boiler Circulating and each System Pump
    b. DO Burner Stage 1 for each Boiler
    c. DO Burner Stage 2 for each Boiler
    d. AI Outside Air Temp
    e. AI Main HW Supply Temp
    f. AI Main HW Return Temp
    g. DI Status for each Boiler Circulating and each System Pump
    h. DI Alarm for each Boiler
    i. DI Alarm for Emergency Power Off
10. Include Hot Water Supply Reset, Boiler Sequencing, and Pump Sequencing subroutines into existing Honeywell EBI BAS Program.

<u>Fraser Valley Elementary School:</u>

We will provide and install a flat plate heat exchanger, new secondary system circulating pumps, and cross-connected piping between a new boiler plant with two boilers to an older single boiler plant within the building. The new heat exchanger will be located in an existing storage room located approximately halfway between the two heating systems. The new secondary circulating pumps will be located in the boiler room housing the old single boiler. The new secondary circulating pumps will be integrated into the existing building automation system (BAS). Final design documents will be developed by an engineer licensed in the State of Colorado and will be available for review by the East Grand School District prior to beginning of installation. This measure will result in equipment reliability and redundancy for the old single boiler heating system. Additional detail follows.

We will:

1. Provide and install one Bell & Gossett Flat Plate Heat Exchanger model GPX P14-20-TM, with hot side capacities: 53 GPM, 180 F ent., 170 F lvg, 253 MBH heat exchanged, 35% propylene glycol; and cold side capacities: 45 GPM, 160 F ent., 172 F lvg., water.
2. Provide and install two Bell & Gossett Series 60 Model 1.5x5.25, 1750 RPM, 3/4 hp in-line secondary system circulating pumps with a pumping capacity of 45 GPM @ 60 feet of head each.
3. Provide and install Bell & Gossett Air Separator Rolairtrol Model R-2-1/2. Provide and install a diaphragm expansion tank to match the system acceptance volume of the existing old boiler system tank.
4. Provide and install all necessary valves & piping appurtenances as necessary to provide a working and functioning system. Provide and install new piping from the heat exchanger back to the old single boiler system mechanical room and make new piping connections to existing hydronic supply and return piping. Provide and install new piping from the two boiler plant system hydronic piping to the hot side of the new heat exchanger. Existing pumps on the two boiler plant system are adequately sized to handle the pressure drop associated with the new piping and the pressure drop through the new heat exchanger.

5. Connect the two new secondary circulating pumps to new magnetic starters to be installed in existing electrical switchgear in the old boiler room.
6. Integrate existing old boiler plant circulating pumps and new secondary system circulating pumps into existing Honeywell EBI BAS. Points to integrate include:
    a. DO Enable for each Secondary System Pump
    b. DI Status for each Secondary System Pump
    c. DO Enable for each existing old boiler plant circulating Pump
    d. DI Status for each existing old boiler plant circulating Pump
7. Include Pump Sequencing subroutine into existing Honeywell EBI BAS Program.

- OPERATIONS AND MAINTENANCE DESCRIPTIONS

Grand Lake Elementary School: This measure involves the replacement of an existing boiler with two new boilers and replacement of existing controls with new controls tied into the existing BAS. This new equipment will need to be maintained following the manufacturer's recommendations. This maintenance, as well as any repairs to the new equipment outside of the warranty period, will be the responsibility of the East Grand School District.

Fraser Valley Elementary School: This measure involves the installation of new mechanical equipment and controls and the integration of those controls into the existing BAS. This new equipment will need to be maintained following the manufacturer's recommendations. This maintenance, as well as any repairs to the new equipment outside of the warranty period, will be the responsibility of the East Grand School District.

- IMPLEMENTATION PLAN

Grand Lake Elementary School:
Our plan for installing the new boilers is as follows:

1. Perform a combustion efficiency test on the existing boiler.
2. Demolish existing boiler, air separator, expansion tank, circulating pumps, and associated piping, valves, and appurtenances as necessary to accommodate the installation of the new boilers.
3. Install the new boilers, air separator, expansion tank, pumps, and utility connections as described above.
4. Integrate new boilers into existing BAS as described above.
5. This work will be performed during a break in normal school hours to avoid shut down of the heating system for the school.

Fraser Valley Elementary School:

Our plan for installing the flat plate heat exchanger is as follows:

1. Install the new heat exchanger, air separator, expansion tank, secondary pumps, and hydronic piping connections as described above.
2. Integrate new secondary pumps into existing BAS as described above.
3. This work will be performed during a break in normal school hours to avoid shut down of heating systems for the school.

ECM 3.1: CONTROL SYSTEMS UPGRADES

▪ EXISTING CONDITIONS

Currently, a Honeywell EBI and a Tridium BAS serves five of the eight facilities at the East Grand School District. The Honeywell EBI system has been a recent upgrade from an older Honeywell BAS. The Tridium system was installed this past year and controls the systems installed under the 2008 building additions at Middle Park High School, Fraser Valley Elementary School, and Granby Elementary School. This retrofit will expand the control capabilities of the Honeywell EBI system to existing equipment and systems currently just being enabled with zone temperature controls in addition to integrating new equipment installed under this contract and existing equipment currently not integrated into the BAS. This will involve conversion of existing pneumatic controls to DDC. The three facilities currently not controlled by either BAS will have webstats installed to allow temperature setback programming and remote monitoring capability.

▪ DESCRIPTION OF EQUIPMENT TO BE INSTALLED

We will expand the current Honeywell EBI BAS controls to integrate existing and new equipment currently not controlled by the system and add subroutine programming to accommodate unoccupied period setback, morning warmup, and demand control ventilation. Webstats will be added to the three buildings that currently have stand-alone manual controls. This measure will upgrade existing BAS controls as described below for each building. This measure will result in lower energy consumption and improved comfort and indoor air quality.

Details of our scope of work for each building affected by this measure follow.

Middle Park High School

1. Furnish and Install new DDC control points and integrate those points into the Honeywell EBI system replacing the existing pneumatic controls for the existing original building heating and ventilating units HVU-1 Auditorium, and HVU-9 Old Gym.
2. Implement unoccupied period setback, morning warmup, mixed air control, and demand control ventilation programming subroutines. Currently units have start/stop and space temperature control points controlled by the BAS. Add schedule to close outside air dampers during unoccupied periods. Points to integrate are:
    a. AO Hot Water Valve for each HVU
    b. AO Mixed Air Damper for each HVU
    c. AI Mixed Air temperature for each HVU
    d. AI Discharge Air Temperature for each HVU
    e. AI Return Air CO_2 Concentration for each HVU
    f. DI Supply Fan Status for each HVU
    g. AI Mixed Air Damper Position for each HVU
    h. AI Mixed Air Temperature Low Alarm for each HVU
    i. AI Fan Speed for each HVU and AHU variable frequency drive
3. Furnish and Install new DDC control points and integrate those points into the Honeywell EBI system replacing the existing pneumatic controls for the existing original building air handling units AHU-1 Southwest Classrooms, and AHU-2 Northwest Classrooms.
4. Implement mixed air control programming subroutine. Currently units have start/stop and reheat zone temperature control points controlled by the BAS. Add schedule to close outside air dampers during unoccupied periods. Points to integrate are:

a. AO Mixed Air Damper for each AHU
b. AI Mixed Air temperature for each AHU
c. AI Discharge Air Temperature for each AHU
d. DI Supply Fan Status for each AHU
e. AI Mixed Air Damper Position for each AHU
f. AI Mixed Air Temperature Low Alarm for each AHU

5. Reprogram Honeywell EBI system for the 1998 AHU-1 Classroom Addition and AHU-2 Weight Room Addition.
6. Implement unoccupied period setback, morning warmup, and mixed air control programming subroutines. Currently units have start/stop, space temperature control points, and mixed air damper controlled by the BAS. Only programming changes and additions are necessary.
7. Reprogram Tridium system for the 2008 AHU-1 New Gym, AHU-2 Weight Room, AHU-3 Office Addition, & AHU-4 Classroom Addition. Furnish and Install new DDC control points and integrate those points into the Tridium BAS.
8. Implement unoccupied period setback and morning warmup control programming subroutines. Currently units have start/stop, space temperature control points, and mixed air damper controlled by the BAS. Points to integrate are: AI Fan Speed for AHU-1 Gym variable frequency drive

East Grand Middle School

1. Furnish and Install two new return air duct mounted CO_2 sensors for AHU-4 Cafeteria/Commons area and AHU-8 Gym and integrate those new points into the Honeywell EBI system. Furnish and install new outside air and return air dampers and actuators for AHU-8 Gym and integrate those new points into the Honeywell EBI BAS.
2. Implement unoccupied period setback, morning warmup, mixed air control, and demand control ventilation programming subroutines. AHU-4 currently has start/stop, space temperature, and mixed air control points controlled by the BAS. AHU-8 currently has start/stop and space temperature control points controlled by the BAS. Points to integrate are:
    a. AO Mixed Air Damper for AHU-8
    b. AI Return Air CO_2 Concentration for AHU-4 and AHU-8
    c. AI Mixed Air Damper Position for AHU-8
    d. AI Fan Speed for AHU-4 and AHU-8 variable frequency drives
3. Reprogram Honeywell EBI system for AHU-1, 2, 6, 7, & 9.
4. Implement unoccupied period setback, morning warmup, and mixed air control programming subroutines. Currently units have start/stop, space temperature control points, and mixed air damper controlled by the BAS. Only programming changes and additions are necessary.
5. Reprogram Honeywell EBI system for AHU-10 Boiler Room Combustion Air AHU.
6. Add interlock controls or BAS programming changes so that AHU runs only when either of two boilers runs. Currently, the AHU runs continuously.

Fraser Valley Elementary School

1. Furnish and Install new DDC control points and integrate those points into the Honeywell EBI system for the unit heater serving the bus barn, the two new secondary heating water pumps, and the eight new classroom unit ventilators.
2. Points to integrate are:
    a. DO Enable for each Secondary System Pump
    b. DI Status for each Secondary System Pump
    c. DO Enable for bus barn unit heater
    d. DI Status for bus barn unit heater
    e. AI Space Temperature for bus barn

    f. AI Space Temperature for each unit ventilator
    g. DO Enable for unit ventilator
    h. DI Status for each unit ventilator
3. Furnish and Install one new return air duct mounted CO_2 sensors for AHU-1 Gym and integrate the new points into the Honeywell EBI system.
4. Implement unoccupied period setback, morning warmup, mixed air control, and demand control ventilation programming subroutines. AHU-1 currently has start/stop, space temperature, and mixed air control points controlled by the BAS. Add schedule to close outside air dampers during unoccupied periods. Currently, outside air dampers remain open during unoccupied periods. Points to integrate are:
    a. AI Return Air CO_2 Concentration for AHU-1
    b. AI Fan Speed for AHU-1 variable frequency drive
5. Reprogram Honeywell EBI system for AHU-2 1998 Classroom Addition.
6. Implement unoccupied period setback, morning warmup, and mixed air control programming subroutines. Currently unit has start/stop, space temperature control points, and mixed air damper controlled by the BAS. Add schedule to close outside air dampers during unoccupied periods. Currently, outside air dampers remain open during unoccupied periods. Only programming changes and additions are necessary.
7. Implement unoccupied period setback and morning warmup programming subroutines to Old Gym HVU. HVU currently has start/stop and space temperature control points controlled by the BAS. Add schedule to close outside air dampers during unoccupied periods.

Granby Elementary School

1. Furnish and Install new DDC control points and integrate those points into the Honeywell EBI system for the 2005 Classroom Addition RTU.
2. Implement unoccupied period setback, morning warmup, and mixed air control programming subroutines for the RTU. Add schedule to close outside air dampers during unoccupied periods. Points to integrate are:
    a. DO Enable for the RTU
    b. DI Status for the RTU
    c. AO Mixed Air Damper for RTU
    d. AI Discharge Air Temperature for RTU
    e. AI Reheat Zone Temperature for 4 zones
    f. AI Discharge Air Temperature for each AHU
    g. AO Hot Water Valve for RTU
3. Furnish and Install new DDC control points and integrate those points into the Honeywell EBI system for the new heat recovery unit.
4. Points to integrate are:
    a. DO Enable for heat recovery unit furnace
    b. DI Status for heat recovery unit furnace
    c. AI Space Temperature for Gym
    d. AI Discharge Air Temperature for heat recovery unit
    e. DO Enable for heat recovery unit supply and exhaust fans
    f. DI Status for heat recovery unit supply and exhaust fans

Grand Lake Elementary School

1. Furnish and Install new DDC control points and integrate those points into the Honeywell EBI system for the existing music room unit ventilator, the existing sewer lift station pumps, the two new boiler circulating heating water pumps, the two new system heating water circulating pumps, the two new boilers, and the eight new classroom unit ventilators.

2. For the new boiler upgrades include Hot Water Supply Reset, Boiler Sequencing, and Pump Sequencing subroutines into existing Honeywell EBI BAS Program. Points to integrate are:
    a. DO Enable for each Boiler Circulating and each System Pump
    b. DO Burner Stage 1 for each Boiler
    c. DO Burner Stage 2 for each Boiler
    d. AI Outside Air Temp
    e. AI Main HW Supply Temp
    f. AI Main HW Return Temp
    g. DI Status for each Boiler Circulating and each System Pump
    h. DI Alarm for each Boiler
    i. DI Alarm for Emergency Power Off
3. For the existing music room unit ventilator, the existing sewer lift station, and the eight new unit ventilators integrate the following points into the BAS:
    a. DO Enable for music room unit ventilator
    b. DI Status for music room unit ventilator
    c. AO Hot Water Valve for music room unit ventilator
    d. AI Space Temperature for music room unit ventilator
    e. DO Enable for sewer lift station pumps
    f. DI Status for sewer lift station pumps
    g. AI Space Temperature for each new unit ventilator
    h. DO Enable for new unit ventilator
    i. DI Status for each new unit ventilator
4. Implement unoccupied period setback and morning warmup programming subroutines to Gym HVU. HVU currently has start/stop and space temperature control points controlled by the BAS. Add schedule to close outside air dampers during unoccupied periods.

Indian Peaks Charter School

1. Provide and install eight webstats to control the existing eight gas heat and ventilating units. Program webstats for temperature setback during unoccupied periods.

District Office

1. Provide and install three webstats to control the existing three gas furnace/DX cooling units and one webstat to control the new gas furnace/DX cooling unit. Program webstats for temperature setback during unoccupied periods.
2. Install a space mounted carbon monoxide, CO, sensor to control the new heat recovery unit. Control new heat recovery unit to run whenever carbon monoxide level exceeds 50 ppm, (adj) in the space. Furnace section to be controlled by supply duct mounted temperature sensor to maintain discharge air temperature setpoint. Unit to be off with the outside air damper closed whenever CO level is less than setpoint.
3. Provide and install three manual thermostats to control three new gas-fired radiant tube heaters in District office Warehouse.

Transportation Facility

1. Provide and install six webstats to control the three existing makeup air units and three existing air handling units. Program webstats for temperature setback during unoccupied periods.

- ## OPERATIONS AND MAINTENANCE DESCRIPTIONS

This measure involves the installation of controls. New controls will need to be maintained following the manufacturer's recommendations, and software will need to be upgraded from time to time. The maintenance and repairs to the new equipment outside of the warranty period, and software upgrades, will be the responsibility of the East Grand School District.

- ## IMPLEMENTATION PLAN

Our plan for implementing the control system upgrades is as follows:

1. Replace existing pneumatic controls that are to be integrated into the BAS systems with new DDC controls.
2. Reprogram the existing BAS to include new subroutines as described above.
3. Install the new control hardware and software as described above.
4. Integrate new controls into the existing BAS and program system as described above.
5. Perform point checkout of all modifications made to the existing BAS.
6. This work will be performed during normal school hours. Close coordination with facilities maintenance staff will be required to minimize disruptions to building operations.

ECM 4.1: UNIT VENTILATOR REPLACEMENT

▪ EXISTING CONDITIONS

The unit ventilators installed in the original building construction at Grand Lake Elementary School and Fraser Valley Elementary School require replacement due to age and current condition. This measure will result in improved comfort and equipment reliability.

▪ DESCRIPTION OF EQUIPMENT TO BE INSTALLED

We will provide and install eight hydronic, heating only, unit ventilators to replace the existing classroom unit ventilators at Grand Lake Elementary School and Fraser Valley Elementary School. The new unit ventilators will be integrated into the existing building automation system (BAS). Final design documents will be developed by an engineer licensed in the State of Colorado and will be available for review by the East Grand School District prior to beginning of installation. This measure will result in improved comfort and equipment reliability. Additional detail follows.

We will:

1. Demolish existing unit ventilators, control valves, control systems, and hydronic piping as necessary to accommodate the installation of the new unit ventilators. Remove all demolished equipment, piping, valves, etc and dispose of properly.
2. Provide and install two new 1,250 CFM vertical unit ventilators for original building classrooms with 2 exterior wall exposures and six new 1,000 CFM vertical unit ventilators for original building classrooms with 1 exterior wall exposure at both Grand Lake Elementary School and Fraser Valley Elementary Schools. Provide and install new 3-way hydronic heating control valves and connect to existing hydronic piping. Connect outside air intake to existing outside air intake louver and provide and install new outside air damper and integrate controls into the existing BAS. Provide air and hydronic balancing for new unit ventilators.
3. Connect the new unit ventilators to existing electrical connections provided for the old unit ventilators.
4. Integrate new unit ventilators into existing Honeywell EBI BAS. Points to integrate include:
    a. AI Space Temperature for each unit ventilator
    b. DO Enable for unit ventilator
    c. DI Status for each unit ventilator
    d. DO for outside air damper

▪ OPERATIONS AND MAINTENANCE DESCRIPTIONS

This measure involves the replacement of the existing unit ventilators in the original construction classrooms with new unit ventilators and replacement of existing controls with new controls tied into the existing BAS. This new equipment will need to be maintained following the manufacturer's recommendations. This maintenance, as well as any repairs to the new equipment outside of the warranty period, will be the responsibility of the East Grand School District.

- IMPLEMENTATION PLAN

Our plan for installing the new unit ventilators is as follows:

1. Demolish existing unit ventilators, control valves, controls, and hydronic piping as necessary to accommodate the installation of the new unit ventilators.
2. Install the new unit ventilators and utility and outside air ductwork connections as described above.
3. Integrate new unit ventilators into existing BAS as described above.
4. Balance air and water flows through the unit ventilators as described above. Test and balance report will be provided to the East Grand School District.
5. This work will be performed during a break in normal school hours to avoid shut down of the heating system for the school.

ECM 4.2: HEAT RECOVERY UNIT INSTALLATION

▪ EXISTING CONDITIONS

The Granby Elementary School Gym currently has no mechanical ventilation system to serve the area. The District Office Warehouse has an inadequate ventilation system to adequately remove exhaust fumes from entering the adjacent offices.

▪ DESCRIPTION OF EQUIPMENT TO BE INSTALLED

We will provide and install a Heat Recovery Unit (HRU) to provide ventilation to the Granby Elementary School Gym and the District Office Warehouse. The HRU at Granby Elementary School will be located on the lower roof adjacent to the high wall of the Gym. The HRU at the District Office Warehouse will be located on the floor of the warehouse adjacent to the north wall. The HRU at Granby Elementary School will be integrated into the existing BAS. The HRU at the District Office will be controlled by a space carbon monoxide sensor and duct mounted temperature sensor. Final design documents will be developed by an engineer licensed in the State of Colorado and will be available for review by the East Grand School District prior to beginning of installation. This measure will result in improved comfort and indoor air quality. Additional detail follows.

We will:

1. Provide and install at Granby Elementary School a Munters/Des Champs, Mini-Z-Pack Heat Recovery Unit, model 8702, and sized for: 2,200 CFM, 3.3 in. wc. total static supply and 2.3 in. wc. total static exhaust, 3 Hp supply fan motor, 2 Hp exhaust fan motor, 208V/3ph/60Hz, gas furnace section 93 MBH output at 8,000 feet altitude, heat recovery effectiveness 61.2%, heat transferred from HRU 95,893 BTUH. The unit will be located on a 6" high insulated roof curb with side duct discharge. Include a minimum of 2" insulation.
2. Provide and install at the District Office Warehouse a Munters/Des Champs, Mini-Z-Pack Heat Recovery Unit, model 8710, and sized for: 9,000 CFM, 3.6 in. wc. total static supply and 2.6 in. wc. total static exhaust, 10 Hp supply fan motor, 7.5 Hp exhaust fan motor, 208V/3ph/60Hz, gas furnace section 400 MBH output at 8,000 feet altitude, heat recovery effectiveness 73.4%, heat transferred from HRU 470,400 BTUH. The unit will be located on a 4" high concrete housekeeping pad on the floor of the District Office Warehouse with side duct discharge.
3. Provide and install supply and exhaust ductwork for both HRU's. All outdoor ducts shall be externally insulated with 4" minimum fiberglass insulation and fully adhered aluminum weather protective barrier. Indoor exhaust duct shall be un-insulated.
4. Provide saw cut of exterior wall at Granby Elementary School and support openings as required for penetrations. Seal exterior wall penetrations. Demolish existing sidewall exhaust fan from District Office Warehouse and reuse exterior wall opening for new exhaust outlet from new HRU. Demolish existing intake louver on south wall and motorized dampers and interlock controls with existing exhaust fan. Patch and insulate wall opening to match original wall construction. Provide and install a new outside air intake louver and damper at the east wall of the District Office Warehouse for new outside air intake.
5. Provide and install (8) Titus model 301RL-HD supply air registers in the exposed spiral seam ductwork at Granby Elementary School Gym. Provide and install (6) Titus model 301RL-HD supply air registers in the exposed ductwork at the District Office Warehouse.
6. Provide and install (1) 30x18, Titus model 355ZRL-HD exhaust grille at Granby Elementary School. Provide and install (5) 14" x 12" exhaust duct drops with manual opposed blade damper to 12" above the floor at the District office Warehouse.

7. Provide and install new gas piping from meter to new duct furnaces. Run new piping along the exterior north wall at Granby Elementary School to HRU on the roof. The District Office Warehouse HRU will require increasing the existing gas pressure to 2 psi and installing gas pressure regulators at all existing and new gas-fired appliances. Run new gas piping from the meter through the building and overhead, tight to roof structure to new HRU located on the floor of the warehouse.
8. Connect the new 3 HP supply fan and 2 HP exhaust fan motors at Granby Elementary School to the existing switchgear located in the boiler room. Provide and install new magnetic starters. The District Office will require an electrical service upgrade. The current electrical service, 120/240 volt, single phase, 400 amp is inadequate to supply the power requirements of the new HRU. Upgrade of the existing electrical service is the responsibility of the East Grand School District and an upgrade will accommodate the installation of the new HRU in addition to meeting future expansion needs.
9. Balance air flows through heat recovery unit ventilators as required by design.
10. Integrate new HRU at Granby Elementary School into the existing Honeywell EBI BAS. Points to integrate include:
    a. DO Enable for supply and exhaust fans
    b. DI Status for supply and exhaust fans
    c. AI Space Air Temp
    d. DO Enable for furnace
    e. DI Status for furnace
    f. AI Return Air Temp for duct furnace
11. Program existing BAS to operate HRU and duct heaters as needed during occupied hours at Granby Elementary School.
12. District Office Warehouse HRU to be controlled by a carbon monoxide sensor located in the warehouse. Control new heat recovery unit to run whenever carbon monoxide level exceeds 50 ppm, (adj) in the space. Furnace section to be controlled by supply duct mounted temperature sensor to maintain discharge air temperature setpoint. Unit to be off with the outside air damper closed whenever CO level is less than setpoint.

▪ OPERATIONS AND MAINTENANCE DESCRIPTIONS

This measure involves the installation of new mechanical equipment and controls. This new equipment will need to be maintained following the manufacturer's recommendations. This maintenance, as well as any repairs to the new equipment outside of the warranty period, will be the responsibility of the East Grand School District.

▪ IMPLEMENTATION PLAN

Our plan for installing the new heat recovery systems is as follows:

1. Install the new HRU's, ductwork, and utility connections as described above.
2. Integrate new HRU at Granby Elementary School into the existing BAS as described above. District Office Warehouse HRU to be controlled by manual carbon monoxide and temperature sensors as described above.
3. Balance air flows through HRU's as described above. Test and balance report will be provided to the East Grand School District.
4. This work will be performed during normal business and school hours. Close coordination with facilities maintenance staff will be required to minimize disruptions to building operations.

ECM 4.3: FURNACE INSTALLATION

▪ EXISTING CONDITIONS

The District Office Warehouse offices currently are heated only by gas-fired unit heaters with no means for ventilation or cooling.

▪ DESCRIPTION OF EQUIPMENT TO BE INSTALLED

We will provide and install a high efficiency, gas-fired, condensing furnace with DX cooling coil and remote air-cooled condensing unit for the Warehouse offices. The new furnace will be located on the floor of the warehouse adjacent to the south warehouse office. The furnace will be controlled by a webstat as mentioned previously in ECM 3.1 Control System Upgrades. Final design documents will be developed by an engineer licensed in the State of Colorado and will be available for review by the East Grand School District prior to beginning of installation. This measure will result in improved comfort and indoor air quality. Additional detail follows.

We will:

1. Demolish existing gas-fired unit heaters serving the space. Demolish gas piping back to gas main and cap pipe at the main. Demolish existing thermostat controls for the unit heaters.
2. Provide and install an upflow, high efficiency, gas furnace Lennox model G51MP-36B-070, and sized for: 1,200 CFM, 0.5 in. wc. external static pressure, 12 full load amps, 120V/1ph/60Hz, 66 MBH output at 8,000 feet altitude, with 2-ton capacity DX cooling coil. The unit will be located on the floor of the Warehouse on a 3" high concrete housekeeping pad..
3. Provide and install an air-cooled condensing unit Lennox model 13ACX-024-230-2, 2-ton capacity, 230V/1ph/60Hz, 17.5 full load amps. Install on grade adjacent to the west exterior wall of the Warehouse on a concrete and plastic housekeeping pad.
4. Provide and install supply, return, and outside air intake ductwork.
5. Provide saw cut of exterior wall at the Warehouse and support openings as required for outside air intake penetration. Seal exterior wall penetration. Provide and install a new outside air intake louver and damper at the west wall of the District Office Warehouse for new outside air intake.
6. Provide and install (4) Titus model TMS 24" x 24" ceiling diffusers. Provide and install (2) Titus model PAR return air ceiling registers.
7. Provide and install a condensate pump for DX cooling coil and provide and install condensate discharge piping from the pump to the nearest sanitary drain. Provide and install air gap fitting at drain connection to meet current plumbing code requirements.
8. Provide and install pre-charged refrigerant R410A line sets and run refrigerant piping from remote air-cooled condenser to DX cooling coil at furnace.
9. The District Office Warehouse will require increasing the existing gas pressure to 2 psi and installing gas pressure regulators at all existing and new gas-fired appliances. Run new gas piping from the meter through the building to the new furnace located on the floor of the warehouse.
10. Connect the new furnace supply fan to the existing power panel located on the west wall of the Warehouse.
11. Balance air flow through the furnace as required by design.
12. Provide and install a webstats to control the new gas furnace/DX cooling unit. Program webstat for temperature setback during unoccupied periods.

▪ OPERATIONS AND MAINTENANCE DESCRIPTIONS

This measure involves the installation of new mechanical equipment and controls. This new equipment will need to be maintained following the manufacturer's recommendations. This maintenance, as well as any repairs to the new equipment outside of the warranty period, will be the responsibility of the East Grand School District.

▪ IMPLEMENTATION PLAN

Our plan for installing the new furnace and condensing unit is as follows:

1. Install the new furnace, DX cooling coil, and condensing unit, ductwork, and utility connections as described above.
2. District Office Warehouse furnace to be controlled by webstat as described above.
3. Balance air flows through the furnace as described above. Test and balance report will be provided to the East Grand School District.
4. This work will be performed during normal business hours. Close coordination with facilities maintenance staff will be required to minimize disruptions to building operations.

ECM 4.4: CONDENSING UNIT REPLACEMENT

▪ EXISTING CONDITIONS

The District Office currently has three air-cooled condensing units that are 24 years old and in need of replacement.

▪ DESCRIPTION OF EQUIPMENT TO BE INSTALLED

We will provide and install three air-cooled condensing units and matching DX cooling coils at each of three existing furnaces serving the District Office. The new condensing units will replace the three existing units and be installed on grade in locations where the old units were. The new condensing units will result in improved comfort, reliabilility, and will be safer for the environment. Final design documents will be developed by an engineer licensed in the State of Colorado and will be available for review by the East Grand School District prior to beginning of installation. This measure will result in improved comfort, equipment reliability, and be safer for the environment. We will:

1. Demo three existing air-cooled condensing units and three DX cooling coils. Remove associated refrigerant piping from the condensing units located on grade outside the District Office to the DX cooling coils located at the three existing furnaces.
2. Provide and install air-cooled condensing units and matching DX cooling coils as follows, Board Room: Lennox model 13ACX-060-230-2, 5-ton capacity, 26.2 full load amps, 230V/1ph/60Hz, with 5-ton capacity DX cooling coil; South Offices: Lennox model 13ACX-030-230-2, 2.5-ton capacity, 14.1 full load amps, 230V/1ph/60Hz, with 2.5-ton capacity DX cooling coil; North Offices: Lennox model 13ACX-042-230-2, 3.5-ton capacity, 17.9 full load amps, 230V/1ph/60Hz, with 3.5-ton capacity DX cooling coil. Install all units on grade in locations where old units were installed on existing concrete housekeeping pads.
3. Provide and install pre-charged refrigerant R410A line sets and run refrigerant piping from remote air-cooled condensers to DX cooling coils at furnaces.
4. Connect the new condensing units to existing electrical connections.
5. Provide and install three webstats to control the existing gas furnace, new DX cooling coils and air-cooled condensing units. Program webstats for temperature setback and setup during unoccupied periods.

▪ OPERATIONS AND MAINTENANCE DESCRIPTIONS

This measure involves the replacement of existing condensing units with new condensing units and replacement of existing controls with new controls.. The new equipment will need to be maintained following the manufacturer's recommendations. This maintenance, as well as any repairs to the new equipment outside of the warranty period, will be the responsibility of the East Grand School District.

▪ IMPLEMENTATION PLAN

Our plan for installing the new condensing units and DX cooling coils is as follows:

1. Install the new DX cooling coils and condensing units and utility connections as described above.
2. The existing furnaces and new DX cooling coils and condensing units to be controlled by webstat as described above.
3. This work will be performed during normal business hours. Close coordination with facilities maintenance staff will be required to minimize disruptions to building operations.

ECM 4.5: GAS-FIRED RADIANT HEATER INSTALLATION

▪ EXISTING CONDITIONS

The District Office Warehouse is currently heated by 3 gas-fired unit heaters.

▪ DESCRIPTION OF EQUIPMENT TO BE INSTALLED

We will provide and install three high efficiency, gas-fired radiant tube heaters to replace the existing unit heaters in the District Office Warehouse. The new radiant tube heaters will be suspended from the existing structure. Replacing the existing unit heaters with high efficiency gas-fired radiant tube heaters will improve comfort and result in energy savings.

The radiant tube heaters will be controlled by a wall mounted line voltage thermostat as mentioned previously in ECM 3.1 Control System Upgrades. Final design documents will be developed by an engineer licensed in the State of Colorado and will be available for review by the East Grand School District prior to beginning of installation. This measure will result in improved comfort and a reduction in energy consumption. We will:

1. Demolish the three existing gas-fired unit heaters serving the space. Demolish gas piping back to gas main and cap pipe at the main. Demolish existing thermostat controls for the unit heaters.
2. Provide and install three radiant tube heaters, solaroracs model STG-100-30 , tube length 30 feet, 120V/1ph/60Hz, 100 MBH input, 90MBH output at 8,000 feet altitude,. The units will be suspended from existing structure utilizing manufacture's hanger kit.
3. Provide and install 4 inch diameter intake and exhaust vents and run intake and exhaust through exterior walls or roof . Terminate inappropriate roof or wall cap.
4. The District Office Warehouse will require increasing the existing gas pressure to 2 psi and installing gas pressure regulators at all existing and new gas-fired appliances. Connect new gas piping from the radiant tube heaters to the existing gas mains located in the warehouse.
5. Connect the new radiant tube heaters to the existing unit heater electrical connections..
6. Provide and install a wall mounted line voltage thermostat to control the new gas fired radiant tube heaters.

▪ OPERATIONS AND MAINTENANCE DESCRIPTIONS

This measure involves the replacement of existing unit heaters with new radiant tube heaters and replacement of existing controls with new controls.. The new equipment will need to be maintained following the manufacturer's recommendations. This maintenance, as well as any repairs to the new equipment outside of the warranty period, will be the responsibility of the East Grand School District.

▪ IMPLEMENTATION PLAN

Our plan for installing the new furnace and condensing unit is as follows:

1. Install the new radiant tube heaters and utility connections as described above.
2. Radiant tube heaters to be controlled by line voltage thermostat as described above.
3. This work will be performed during normal business hours. Close coordination with facilities maintenance staff will be required to minimize disruptions to building operations.

ECM 5.1: LIGHTING FIXTURE/CONTROL RETROFIT

▪ EXISTING CONDITIONS

Lighting fixtures in the buildings affected by the lighting fixture retrofit contain a mixture of the following: 4' T8 lamps, 2' T8 lamps, 4' T12 lamps, 8' T8 lamps, 8' T12 lamps, metal halide lamps, incandescent lamps, and electronic ballasts. Lighting fixtures in the buildings affected by the lighting controls retrofit contain or will contain 4' T8 lamps and electronic ballasts. Existing lighting controls included manual switches and some schools have occupancy sensors for classroom lighting. Additional detail is provided in the "Description of existing facilities, mechanical, and electrical systems" table in the overview section, and in the line-by-line retrofit description by building provided in the appendix.

▪ DESCRIPTION OF EQUIPMENT TO BE INSTALLED

Fixtures containing fluorescent, incandescent, and metal halide lamps in the buildings affected will be retrofitted with new lamp and ballast combinations as appropriate. In some cases, fixtures will be replaced entirely. Lighting controls, specifically occupancy sensors, photocells, and additional manual switches, will be provided and installed to switch lighting fixtures or individual lamps within fixtures off when not needed in the buildings affected by this retrofit as appropriate. This measure will result in decreased electric consumption and demand and enhanced lighting quality. The buildings affected by this measure are the Middle Park High School, East Grand Middle School, Fraser Valley Elementary School, Granby Elementary School, Grand Lake Elementary School, Indian Peaks Charter School, District Office, and Transportation Facility. Line-by-line retrofit descriptions for each building showing existing fixture details, proposed fixture details, number of total wattage of fixtures controlled, and savings are provided in the appendix.

This measure excludes repairs to existing fixtures, such as replacing cracked lenses, that are not scheduled for replacement under this retrofit. Note that "savings" reported in the line-by-line retrofit descriptions do not include impact of lighting retrofits on HVAC systems. Those impacts are accounted for in the detailed savings analysis for this measure.

▪ OPERATIONS AND MAINTENANCE DESCRIPTIONS

This measure involves the replacement of existing lamps, ballasts, and fixtures with new lamps, ballasts, and fixtures and involves the installation of photocells, occupancy sensors, and additional manual switches to switch lighting fixtures on and off. New ballasts will not need to be replaced for a minimum of three years. When new ballasts and lighting controls fail, they will need to be replaced with ballasts having similar performance characteristics. Similarly, when new lamps fail, they will need to be replaced with lamps having similar performance characteristics. These replacements are required in order to ensure the capability of this retrofit to continue to perform and generate savings, and shall be the responsibility of the East Grand School District.

- IMPLEMENTATION PLAN

Our plan for implementing the lighting fixture/controls retrofit is as follows:

1. Take light level readings for representative fixtures prior to initiating retrofit in each building.
2. Remove lamps and ballasts from fixtures to be retrofitted. PCB containing ballasts and mercury containing lamps shall be recycled following EPA guidelines.
3. Demolish any fixtures to be replaced entirely.
4. Provide and install new lamps, ballasts, fixtures, and other equipment as necessary to complete the retrofit.
5. Dry wipe lenses clean.
6. Update fixture retrofit count before and after light level readings for representative areas. Updated fixture count will be used to recalculate savings estimated in the Technical Energy Audit to establish actual year 1 savings and determine any potential shortfall using the modeling provided in the attached compact disk. Note that in no case will the guaranteed savings be lowered to a level less than that provided in the contract schedules.
7. Provide and install occupancy sensors, photocells, and manual switches as required in order to switch lighting fixtures or individual lamps off during unoccupied periods, when daylight levels are sufficient to illuminate occupied space, or when full illumination is not required.
8. Update counts of occupancy sensors, photocells, and manual switches installed, and number and wattages of fixtures controlled by each device. These updated counts will be used to recalculate savings estimated in the Technical Energy Audit to establish actual year 1 savings and determine any potential shortfall using the modeling provided in the attached compact disk. Note that in no case will the guaranteed savings be lowered to a level less than that provided in the contract schedules.
9. Work will be performed during evenings and weekends in order to avoid disrupting business and school operations.

ECM 6.1: Window And Door Weatherization

- Existing Conditions

This measure will caulk and seal around existing original building construction windows and weather strip around existing doors to eliminate drafts, improve occupant discomfort and generate energy savings.

- Description of equipment to be installed

We will provide and install weather stripping around the top, bottom, and sides of all exterior doors and remove existing caulk and re-caulk the existing windows in the original building construction at Middle Park High School, Fraser Valley Elementary School, Granby Elementary School, Grand Lake Elementary School, Indian Peaks Charter School, and the District Office.

- Operations and maintenance descriptions

This will reduce infiltration and improve occupant comfort. We anticipate some energy savings will also result.

- Implementation plan

Our plan for implementing the window and door weatherization measure is as follows:

1. Caulk and seal around window sills, vertical and headers on all original building construction exterior windows.
2. Provide and install weather stripping around top, bottom, and sides of all exterior doors.
3. This work will be performed during normal school and business hours. Close coordination with facilities maintenance staff will be required to minimize disruptions to building operations.

ECM 8.1: INSTALL VARIABLE FREQUENCY DRIVES ON HVU & AHU FAN MOTORS

▪ EXISTING CONDITIONS

Currently, the gyms, auditorium, and cafeteria/commons areas in several schools have constant volume air handling units supplying a fixed amount of supply air to the spaces based on full occupancy. The areas are fully occupied for a limited amount of hours during the school year for games, concerts, assemblies, and events and airflow to the spaces could be reduced during normal activities occurring in the spaces such as physical education classes and band practice.

▪ DESCRIPTION OF EQUIPMENT TO BE INSTALLED

This measure will affect the Middle Park High School Gyms and Auditorium, the East Grand Middle School Gym and Cafeteria/Commons area, and the Fraser Valley Elementary School new Gym. We will provide and install variable frequency drives, VFD's, to HVU-1 serving the Auditorium, HVU-9 serving the old Gym, and AHU-1 serving the new Gym at Middle Park High School, AHU-4 serving the Cafeteria/Commons area and AHU-8 serving the Gym at East Grand Middle School, and AHU-1 serving the new Gym at Fraser Valley Elementary School. The installation of VFD's to HVU-1 and HVU-9 will require new premium efficiency motors to be installed for the supply fan motors. All VFD's will be integrated into the existing BAS. The VFD's shall be programmed from the BAS based on occupancy determined from the CO_2 sensor. Adjust fan speed for CO_2 levels under 800 ppm to be 60%, (adj), of full speed operation and 100% for CO_2 levels over 800 ppm. Control of the VFD will be the greater of either the CO_2 requirements or the space temperature requirements. Final design documents will be developed by an engineer licensed in the State of Colorado and will be available for review by the East Grand School District prior to beginning of installation. This measure will result in improved comfort and electrical energy savings. Final design documents will be developed by an engineer licensed in the State of Colorado and will be available for review by the East Grand School District prior to beginning of installation.We will:

1. Provide and install at Middle Park High School the following VFD's to the supply fan motors: HVU-1, 7.5 hp, 460 volt 3-phase, with a premium efficiency motor with a minimum motor efficiency of 91.3%, HVU-9, 7.5 hp, 460 volt 3-phase, with a premium efficiency motor with a minimum motor efficiency of 91.3%, and AHU-1, 20 hp, 460 volt 3-phase. The HVU's and AHU's do not have return air fans associated with the airside systems.
2. Provide and install at East Grand Middle School the following VFD's to the supply fan motors: AHU-4, 15 hp, 460 volt 3-phase, and AHU-8, 20 hp, 460 volt 3-phase. The AHU's do not have return air fans associated with the airside systems.
3. Provide and install at Fraser Valley Elementary School the following VFD's to the supply fan motor: AHU-1, 10 hp, 208 volt 3-phase. The AHU does not have a return fan associated with the airside system.
4. Connect the new VFD's to the existing electrical connections provided for the existing fan motors
5. Balance air flows through air heating and ventilating units and air handling units receiving a VFD as required by design.
6. Integrate new VFD's into the existing Honeywell EBI BAS. Points to integrate include AO Fan Speed for each HVU and AHU variable frequency drive
7. Program existing BAS to operate new VFD's based on occupancy determined from the CO_2 sensor. Adjust fan speed for CO_2 levels under 800 ppm to be 60%, (adj), of full speed operation and 100% for CO_2 levels over 800 ppm. Control of the VFD will be the greater of either the CO_2 requirements or the space temperature requirements.

▪ OPERATIONS AND MAINTENANCE DESCRIPTIONS

This measure involves the installation of new mechanical equipment and controls. This new equipment will need to be maintained following the manufacturer's recommendations. This maintenance, as well as any repairs to the new equipment outside of the warranty period, will be the responsibility of the East Grand School District.

▪ IMPLEMENTATION PLAN

Our plan for installing the new VFD's is as follows:

1. Install the new VFD's and utility connections as described above.
2. Integrate new VFD's into the existing BAS as described above.
3. Balance air flows through HVU's and AHU's receiving a VFD as described above. Test and balance report will be provided to the East Grand School District.
4. This work will be performed during normal business and school hours. Close coordination with facilities maintenance staff will be required to minimize disruptions to building operations.

ECM 8.2: Domestic Cold Water Booster Pump Replacement

Existing Conditions

The existing domestic cold water booster pump at East Grand Middle School requires extensive annual mechanical maintenance and should be replaced with a more efficient pumping system utilizing variable frequency drives for the pump motors and automatic sequencing of the pumps to meet building water pressure requirements.

Description of equipment to be installed

We will replace the existing duplex domestic cold water pumping system at East Grand Middle School with a new more energy efficient duplex variable frequency drive controlled pumping system. Final design documents will be developed by an engineer licensed in the State of Colorado and will be available for review by the East Grand School District prior to beginning of installation. This measure will result in more efficient O&M of pumps, lower electrical energy use, and lower electric demand. Additional detail follows.

We will:

1. Disconnect all electrical from the pumps.
2. Disconnect and remove all piping to and from the two water pumps.
3. Disconnect and remove the following existing equipment:
    a. Two domestic cold water booster pumps: 7.5 HP – 105gpm.
4. Demolish existing booster pump skid.
5. Provide and install the following new items:
    a. Grundfos variable speed booster pump model ME2 CRE15-4 (2) CR 15-4, 7.5 hp, 3,450 RPM pumps, 4" ANSI Header, discharge pressure sensor, with control panel mounted on stainless steel base. Controls to include normal/emergency switches and Amtrol 34 gallon ST-60V tank, 210 GPM @ 141 ft of head.
6. Reconnect all piping to and from the pumps. Replace any removed valves. Reinstall piping in same schematic arrangement as existing.
7. Reconnect all electrical to pump motors.
8. Include factory startup.

Operations and maintenance descriptions

This measure involves demolishing the existing domestic cold water booster pump system and installing a new domestic cold water booster pump system. This new equipment will need to be maintained following the manufacturer's recommendations. This maintenance, as well as any repairs to the new equipment outside of the warranty period, will be the responsibility of the East Grand School District.

Implementation plan

Our plan for installing this pump upgrade is as follows:

1. Replace existing pumps and pump motors as described above.
2. This work will be performed during a break in normal school hours to avoid shutting off water for the school.

ECM 12.1: Replace Uninterruptible Power Supply System

▪ Existing Conditions

The existing uninterruptible power supply systems, UPS, at Grand Lake Elementary School and Fraser Valley Elementary School are original to the original building construction. The systems are antiquated and should be replaced. The systems provide battery back-up power for emergency lighting, the fire alarm system, and the sound PA system.

▪ Description of equipment to be installed

We will replace the existing UPS systems at Grand Lake Elementary School and Fraser Valley Elementary School with new, more modern technology, UPS systems. Replacing the UPS will result in greater reliability of the emergency power system and reduce O&M costs at each of the two schools.Final design documents will be developed by an engineer licensed in the State of Colorado and will be available for review by the East Grand School District prior to beginning of installation. This measure will result in greater reliability of the emergency power system and reduce O&M costs at each of the two schools. Additional detail follows.

We will:

1. Demolish and remove the existing UPS.
2. Provide and install a new 120 volt, single phase, 1.5 kVA UPS in place of the demolished UPS.
3. Reconnect all existing electrical connections to the new UPS.
4. Include factory startup.

▪ Operations and maintenance descriptions

This measure involves demolishing the existing UPS and installing a new UPS in it's place. This new equipment will need to be maintained following the manufacturer's recommendations. This maintenance, as well as any repairs to the new equipment outside of the warranty period, will be the responsibility of the East Grand School District.

▪ Implementation plan

Our plan for installing the UPS upgrade is as follows:

1. Replace UPS as described above.
2. This work will be performed during normal business and school hours. Close coordination with facilities maintenance staff will be required to minimize disruptions to building operations.

ECM 14.0: Upgrade Fire Alarm System

The objective of this measure is to upgrade existing fire alarm systems in all five (5) District school buildings to comply with current fire code for detection and notification (audio and visual alarm annunciation) and connection to the District's centrally located Honeywell EBI energy management and monitoring system.

Middle Park High School

Installation of an interface between the existing fire alarm system and the existing Honeywell EBI system. The entire building fire alarm system was installed as part of a recent 2008 addition, including individually addressable detection (fire, smoke and heat detectors; manual pull stations) and notification (alarm horns and visual lights/strobes) devices.
Drawings and permitting are not required for this scope of work.
Fire alarm system is currently being monitored for the District by Sasquatch. District will continue this service.

East Grand Middle School

Replace existing Simplex fire alarm control panel and non-addressable fire/smoke detection stations and notification devices with a new fire alarm control panel and individually addressable devices. Integrate to existing Honeywell EBI.
Project will require fully engineered drawings, permitting and full commissioning.
Installation of an interface between the existing fire alarm system and the existing Honeywell EBI system. The entire building fire alarm system was installed as part of recent 2008 addition, including individually addressable detection and notification devices.
Fire alarm system is currently being monitored for the District by Sasquatch. District will continue this service.

Fraser Valley Elementary School

Replace existing Simplex fire alarm control panel and non-addressable fire/smoke detection stations and notification devices with a new fire alarm control panel and individually addressable devices. Integrate portion of existing fire alarm system field devices that are individually addressable.
Integrate to existing Honeywell EBI.
Project will require fully engineered drawings, permitting and full commissioning.
Fire alarm system is currently being monitored for the District by Sasquatch. District will continue this service.

Granby Elementary School

Replace existing Simplex fire alarm control panel and non-addressable fire/smoke detection stations and notification devices with a new fire alarm control panel and individually addressable devices. Integrate portion of existing fire alarm system field devices that are individually addressable.
Integrate to existing Honeywell EBI.
Project will require fully engineered drawings, permitting and full commissioning.
Fire alarm system is currently being monitored for the District by Sasquatch. District will continue this service.

Grand Lake Elementary School

Replace existing Simplex fire alarm control panel and all non-addressable fire/smoke detection stations and notification devices with a new fire alarm control panel and individually addressable devices.
Integrate to existing Honeywell EBI.
Project will require fully engineered drawings, permitting and full commissioning.
Fire alarm system is not currently being monitored for the District by Sasquatch. District will add this service at an approximate monthly cost of $30.
Two phone lines need to be supplied for monitoring by the school district.

SAVINGS CALCULATIONS

ECM 1.1: BOILER PLANT UPGRADES

▪ ESTIMATED ENERGY SAVINGS

Energy savings for the boiler plant upgrades at Grand Lake Elementary School were calculated simply by the difference in nameplate combustion efficiencies between the boiler to be demolished and the boiler specified. Only the boiler and domestic water heater account for the total gas usage at Grand Lake Elementary School so the energy savings are based on subtracting out the domestic water heating usage from the total gas usage of the base year. Domestic water heating usage was determined from averaging the summer months of June through August and multiplying that number by 12 months to account for the annual water heating gas usage. No energy savings were determined for Fraser Valley Elementary School as the installation of the flat plate heat exchanger is solely for heating system redundancy. Projected annual energy unit and cost savings are shown as follows.

Table 1: Grand Lake Elementary School - projected annual energy and cost savings

	Electricity		Fossil Fuel			
	Consumption (kW-hrs)	Demand (kW)	Consumption (MMBTU)	Electricity Cost	Fossil Fuel Cost	Total Cost
Baseline	0	0.0	958	$0	$7,942	$7,942
Post-Installation	0	0.0	908	$0	$7,527	$7,527
Savings	0	0.0	50	$0	$414	$414

.Projected cost savings are 5.2% of the baseline

▪ SAVINGS INTERACTIONS

There are no savings interactions with this measure.

▪ OPERATIONS AND MAINTENANCE SAVINGS

Replacing the boilers at Grand Lake Elementary School will result in improved equipment reliability and result in O&M savings. Overall O&M savings for all of the mechanical improvements as a part of this ESPC are projected to amount to $22,800 annually and to escalate at 3% for the first 17 years and drop 10% per year through year 20.

▪ FORMULAS, ASSUMPTIONS, AND KEY DATA

Energy savings for this measure were calculated using the following formula:

1. Baseline gas usage = total school gas usage during the base year minus the estimated domestic water heating gas usage during the base year. [MMBtu]
2. Proposed gas usage = Baseline gas usage x (Existing Boiler Combustion Efficiency/Proposed Boiler Combustion Efficiency); 958 MMBtu x [0.8/0.844]. [MMBTU]

ECM 3.1: CONTROL SYSTEM UPGRADES

ESTIMATED ENERGY SAVINGS

Estimated energy savings: Note that baseline adjustments will be required to account for the increase in building addition square footage for the 2008 additions at Middle Park High School, Fraser Valley Elementary School, Granby Elementary School, and Indian Peaks Charter School. In addition, a baseline adjustment is required for East Grand Middle School due to the gym currently having no ventilation air.

Table 2: Multiple buildings – projected annual energy and cost savings

	Electricity		Fossil Fuel			
	Consumption (kW-hrs)	Demand (kW)	Consumption (MMBTU)	Electricity Cost	Fossil Fuel Cost	Total Cost
Baseline	2,332,215	6,073.0	16,323	$169,629	$136,771	$306,400
Adjusted Baseline	2,690,235	6,886.0	17,698	$196,429	$148,563	$344,992
Proposed	2,466,776	6,949.0	15,403	$182,903	$129,274	$312,177
Savings	223,459	-63.0	2,294	$13,526	$19,288	$32,814

Projected cost savings are 9.5% of the adjusted baseline.

SAVINGS INTERACTIONS

There are no savings interactions with this measure.

OPERATIONS AND MAINTENANCE SAVINGS

Upgrading the existing Honeywell EBI BAS at Middle Park High School, East Grand Middle School, Fraser Valley Elementary School, Granby Elementary School, Grand Lake Elementary School, Indian Peaks Charter School, District Office, and Transportation Facility will result in improved equipment reliability and result in O&M savings. Overall O&M savings for the control system improvements as a part of this ESPC are projected to amount to $8,600 annually and to escalate at 3% for the first 15 years and drop 10% per year to year 20.

Middle Park High School

Energy savings for this measure were calculated using Trane Trace 700. A baseline model and a proposed model were developed as follows:

Baseline model: The high school is a single-story building and totals approximately 120,781 square feet of conditioned space throughout. The original building comprising approximately 81,700 square feet was constructed in 1979 – 1980. A classroom and weight room addition in 1998 added approximately 11,160 square feet to the original construction square footage. A just recently completed addition this past January added approximately 27,921 square feet. This addition included a new gym, classroom, administration, and cafeteria/commons additions. The entire school is conditioned by nine heating and ventilating units and eight air handling units. Of the eight air handling units four are constant volume reheat units. Only two of the air handling units, serving the computer labs, have DX cooling served by small, 4-ton capacity remote air-cooled condensing units. All of the heating and ventilating units and air handling units are served by two separate gas-fired hot water boiler plants consisting of two boilers for each. Most areas of the building are occupied Mon-Thur from 6am to 4pm and Friday 6am to 11am, (see Standards of Comfort Forms in the Appendix). All of the HVAC systems are scheduled to be on during occupied hours to maintain a setpoint temperature of 68 to 72° F for all areas in heating season. All HVAC systems, including

the boilers will cycle on/off during unoccupied hours to maintain a minimum setpoint temperature of 65 ° F. The baseline model was calibrated using the average of energy utility data for the period December 2006 – November 2008.

Proposed model: This measure will set back the temperature of HVU-1 Auditorium, HVU-9 Old Gym, AHU-1 1998 Classroom Addition, AHU-2 1998 Weight Room Addition from the current 65 ° F to 60 ° F during unoccupied hours. It will also set back the temperature of AHU-1 New Gym 2008 Addition, AHU-2 2008 Athletic Addition, AHU-3 2008 Office Addition, and AHU-4 2008 Classroom Addition from the current 63 ° F to 60 ° F during unoccupied hours. A two hour morning warm up is scheduled prior to occupancy. In addition, this measure will schedule HVAC equipment to be off on Sundays as the old Honeywell BAS only had "weekend" scheduling capability and any HVAC equipment scheduled to be on for Saturday events were left on during Sunday. Finally, this measure will account for energy savings for demand control ventilation by placing the Gym and Auditorium air handling units into event mode occupancy reducing the outside air levels for normal physical education or classroom activity as opposed to the current, constant higher ventilation requirement for full occupancy for games, concerts, assemblies, and events. Note: no demand control ventilation savings will occur for the new gym as demand control ventilation already exists for the new gym air handling unit.

An electronic copy of the Trane Trace 700 model used to calculate savings for this measure is included on the CD accompanying this report.

East Grand Middle School

Energy savings for this measure were calculated using Trane Trace 700. A baseline model and a proposed model were developed as follows:

Baseline model: The middle school is a partial two-story building and totals approximately 86,465 square feet of conditioned space throughout. The original building was constructed in 1999. The entire school is conditioned by ten air handling units. Of the ten air handling units five are constant volume reheat units. All of the air handling units are served by a gas-fired hot water boiler plant consisting of two boilers. Most areas of the building are occupied Mon-Thur from 6am to 4pm and Friday 6am to 11am, (see Standards of Comfort Forms in the Appendix). All of the HVAC systems are scheduled to be on during occupied hours to maintain a setpoint temperature of 68 to 72° F for all areas in heating season. All HVAC systems, including the boilers will cycle on/off during unoccupied hours to maintain a minimum setpoint temperature of 65 ° F. The baseline model was calibrated using the average of energy utility data for the period December 2006 – November 2008.

Proposed model: This measure will set back the temperature of AHU-4 Cafeteria/Commons Area, AHU-5 Kitchen, AHU-6 Locker Room, and AHU-8 Gym from the current 65 ° F to 60 ° F during unoccupied hours. A two hour morning warm up is scheduled prior to occupancy. In addition, this measure will schedule HVAC equipment to be off on Sundays as the old Honeywell BAS only had "weekend" scheduling capability and any HVAC equipment scheduled to be on for Saturday events were left on during Sunday. Finally, this measure will account for energy savings for demand control ventilation by placing the Gym and Cafeteria/Commons air handling units into event mode occupancy reducing the outside air levels for normal physical education or classroom activity as opposed to the current, constant higher ventilation requirement for full occupancy for games, concerts, assemblies, and events.

An electronic copy of the Trane Trace 700 model used to calculate savings for this measure is included on the CD accompanying this report.

Fraser Valley Elementary School

Energy savings for this measure were calculated using Trane Trace 700. A baseline model and a proposed model were developed as follows:

Baseline model: The elementary school is a partial two-story building and totals approximately 52,910 square feet of conditioned space throughout. The original building comprising approximately 27,100 square feet was constructed in 1979 – 1980. A classroom and new gym addition in 1998 added approximately 17,211 square feet to the original construction square footage. A just recently completed addition this past December added approximately 8,599 square feet. This addition included a new classroom wing. The entire school is conditioned by two heating and ventilating units, two air handling units, and eighteen classroom unit ventilators. The 1998 classroom addition air handling unit is a constant volume reheat unit. All of the heating and ventilating units and air handling units are served by two separate gas-fired hot water boiler plants consisting of one and two boilers for each. Most areas of the building are occupied Mon-Thur from 6am to 4pm and Friday 6am to 11am, (see Standards of Comfort Forms in the Appendix). All of the HVAC systems are scheduled to be on during occupied hours to maintain a setpoint temperature of 70 to 72° F for all areas in heating season. All HVAC systems, including the boilers will cycle on/off during unoccupied hours to maintain a minimum setpoint temperature of 65 ° F. The baseline model was calibrated using the average of energy utility data for the period December 2006 – November 2008.

Proposed model: This measure will set back the temperature of AHU-1 New Gym, and AHU-2 1998 Classroom Addition from the current 65 ° F to 60 ° F during unoccupied hours. A two hour morning warm up is scheduled prior to occupancy. In addition, this measure will schedule HVAC equipment to be off on Sundays as the old Honeywell BAS only had "weekend" scheduling capability and any HVAC equipment scheduled to be on for Saturday events were left on during Sunday. Finally, this measure will account for energy savings for demand control ventilation by placing the Gym air handling unit into event mode occupancy reducing the outside air levels for normal physical education classes as opposed to the current, constant higher ventilation requirement for full occupancy for games, assemblies, and events.

An electronic copy of the Trane Trace 700 model used to calculate savings for this measure is included on the CD accompanying this report.

Granby Elementary School

Energy savings for this measure were calculated using Trane Trace 700. A baseline model and a proposed model were developed as follows:

Baseline model: The elementary school is a one-story building and totals approximately 57,279 square feet of conditioned space throughout. The baseline model includes a 3,024 square feet classroom addition constructed in 2005 and served by a rooftop heating and ventilating unit. The 2005 classroom addition rooftop air handling unit is a constant volume reheat unit. The heating and ventilating unit is served by a gas-fired hot water boiler plant consisting of two boilers. The 2005 Classroom Addition is occupied Mon-Thur from 6am to 4pm and Friday 6am to 11am, (see Standards of Comfort Forms in the Appendix). The HVAC system is scheduled to be on during occupied hours to maintain a setpoint temperature of 70 to 72° F for all areas in heating season. All HVAC systems, including the boilers will cycle on/off during unoccupied hours to maintain a minimum setpoint temperature of 65 ° F.

Proposed model: This measure will set back the temperature of the 2005 Classroom Addition RTU from the current 65 ° F to 60 ° F during unoccupied hours. A two hour morning warm up is scheduled prior to occupancy.

An electronic copy of the Trane Trace 700 model used to calculate savings for this measure is included on the CD accompanying this report.

Grand Lake Elementary School

Energy savings for this measure were calculated using Trane Trace 700. A baseline model and a proposed model were developed as follows:

Baseline model: The elementary school is a one-story building and totals approximately 19,000 square feet of conditioned space throughout. The entire school is conditioned by two heating and ventilating units and nine

classroom unit ventilators. The administration and interior classrooms are served by a rooftop constant volume reheat unit. All of the heating and ventilating units and classroom unit ventilators are served by a gas-fired hot water boiler plant consisting of one boiler. Most areas of the building are occupied Mon-Thur from 6am to 4pm and Friday 6am to 11am, (see Standards of Comfort Forms in the Appendix). All of the HVAC systems are scheduled to be on during occupied hours to maintain a setpoint temperature of 70 to 72° F for all areas in heating season. All HVAC systems, including the boilers will cycle on/off during unoccupied hours to maintain a minimum setpoint temperature of 65 ° F.

Proposed model: This measure will set back the temperature of HVU-1 Gym and the music room unit ventilator from the current 65 ° F to 60 ° F during unoccupied hours. A two hour morning warm up is scheduled prior to occupancy.

An electronic copy of the Trane Trace 700 model used to calculate savings for this measure is included on the CD accompanying this report.

Indian Peaks Charter School

Energy savings for this measure were calculated using Trane Trace 700. A baseline model and a proposed model were developed as follows:

Baseline model: The charter school consists of three modular buildings totaling approximately 9,000 square feet of conditioned space throughout. The original, two modular buildings, comprised approximately 2,880 square feet. A new modular building was constructed prior to the start of this past school year in September/October and added an additional 6,000 square feet to the original construction square footage. The entire school is conditioned by eight gas-fired heating and ventilating units. Most areas of the building are occupied Mon-Fri from 8am to 4pm, (see Standards of Comfort Forms in the Appendix). The HVAC systems cycle on/off by programmable thermostats to maintain an occupied setpoint temperature of 68 to 72° F for all areas in heating season. All HVAC systems will cycle on/off during unoccupied hours to maintain a minimum setpoint temperature of 65 ° F. The baseline model was calibrated using the energy utility data for the period December 2007 – November 2008.

Proposed model: This measure will add webstats to set back the temperature of the eight heating and ventilating units from the current 65 ° F to 60 ° F during unoccupied hours. A two hour morning warm up is scheduled prior to occupancy.

An electronic copy of the Trane Trace 700 model used to calculate savings for this measure is included on the CD accompanying this report.

District Office

Energy savings for this measure were calculated using Trane Trace 700. A baseline model and a proposed model were developed as follows:

Baseline model: The District Office consists of an office building comprising approximately 6,120 square feet and an attached warehouse comprising approximately 6,000 square feet bringing the total square footage of the facility to 12,120 square feet. The office portion of the building is conditioned by three high efficiency gas-fired condensing furnaces with DX cooling coils and remote air-cooled condensing units. The attached warehouse and warehouse offices are served by gas-fired unit heaters. The facility is occupied Mon-Thur from 6am to 4pm, (see Standards of Comfort Forms in the Appendix). The office HVAC systems cycle on/off by programmable thermostats to maintain an occupied setpoint temperature of 72 to 74° F for all areas in heating season. The office HVAC systems will cycle on/off during unoccupied hours to maintain a minimum setpoint temperature of 65 ° F. The warehouse has manual non-programmable thermostats that cycle the gas-fired unit heaters on/off to maintain a constant 55 to 60 ° F. The

baseline model was calibrated using the energy utility data for the period December 2006 – November 2008.

Proposed model: This measure will add webstats to set back the temperature of the three heating and ventilating units from the current 65 ° F to 60 ° F during unoccupied hours. A two hour morning warm up is scheduled prior to occupancy.

An electronic copy of the Trane Trace 700 model used to calculate savings for this measure is included on the CD accompanying this report.

Transportation Facility

Energy savings for this measure were calculated using Trane Trace 700. A baseline model and a proposed model were developed as follows:

Baseline model: The Transportation Facility consists of a bus barn comprising approximately 11,250 square feet and attached maintenance bays, a 2nd story classroom, and offices comprising approximately 9,250 square feet bringing the total square footage of the facility to 20,500 square feet. The office portion of the building is conditioned by three heating only air handling units and a hydronic radiant floor heating system. The maintenance bays and classroom are served by gas-fired make-up air units in addition to the hydronic radiant floor heating system. The attached bus barn is heated by gas-fired radiant infrared tube heaters. The Transportation Facility offices are occupied Mon-Thur from 6am to 5pm, (see Standards of Comfort Forms in the Appendix). The office HVAC systems cycle on/off by programmable thermostats to maintain an occupied setpoint temperature of 70 to 72° F for all areas in heating season. The office HVAC systems will cycle on/off during unoccupied hours to maintain a minimum setpoint temperature of 65 ° F. The maintenance bays and classroom make-up air units are controlled by manual duct mounted thermostats that cycle the gas-fired make-up air units to maintain a discharge air temperature of 65 ° F. The bus barn gas-fired radiant infrared heaters cycle on/off to maintain a space temperature of 50 ° F.

Proposed model: This measure will add webstats to set back the temperature of the three office air handling units and the three make-up air units from the current 65 ° F to 60 ° F during unoccupied hours. A two hour morning warm up is scheduled prior to occupancy.

An electronic copy of the Trane Trace 700 model used to calculate savings for this measure is included on the CD accompanying this report.

ECM 4.1: Unit Ventilator Replacement

- Estimated Energy Savings

No energy savings are anticipated for this measure.

- Operations and Maintenance Savings

Replacing the unit ventilators at Grand Lake Elementary School and Fraser Valley Elementary School will result in improved equipment reliability and result in O&M savings. Overall O&M savings for all of the mechanical improvements as a part of this ESPC are projected to amount to $11,800 annually and to escalate at 3% for the first 15 years and drop to zero by 20 years.

ECM 4.2: Heat Recovery Unit Installation

- Estimated Energy Savings

There are no energy savings anticipated for this measure.

- Operations and Maintenance Savings

There are no O&M savings anticipated for this measure.

ECM 4.3: Furnace Installation

- Estimated Energy Savings

There are no energy savings anticipated for this measure.

- Operations and Maintenance Savings

There are no O&M savings anticipated for this measure.

ECM 4.4: Condensing Unit Replacement

- Estimated Energy Savings

There are no energy savings anticipated for this measure.

- Operations and Maintenance Savings

There are no O&M savings anticipated for this measure.

ECM 4.5: Gas-Fired Radiant Heater Installation

- Estimated Energy Savings

There are no energy savings anticipated for this measure.

- Operations and Maintenance Savings

There are no O&M savings anticipated for this measure.

ECM 5.1: LIGHTING FIXTURE/CONTROLS RETROFIT

ESTIMATED ENERGY SAVINGS

Energy savings for the lighting fixture retrofit were calculated using a spreadsheet analysis tool that takes impacts on building HVAC systems into account. Projected annual energy unit and cost savings are shown in the following table.

Table 3: Multiple buildings - projected annual energy and cost savings

	Electricity					
	Consumption (kWh)	Demand (kW)	Fossil Fuel (MMBTU)	Electric Cost	Fossil Fuel Cost	Total Cost
Baseline	1,073,990	4,391	0	$84,667	$0	$84,667
Proposed	656,822	2,760	221	$51,975	$1,868	$53,843
Savings	417,168	1,631	-221	$32,692	-$1,868	$30,824

Projected cost savings are 36% of the baseline.

SAVINGS INTERACTIONS

This measure interacts with building HVAC systems. In general, reducing the total lighting wattage and coincident lighting run hours will increase the heating energy requirement around the perimeter of a building, and decrease the cooling energy requirement of a building. Since most buildings affected by ECM 5.1 have heating, but no cooling, the net effect of this interaction is to lower the cost savings. Proposed energy use and savings calculations for this measure account for HVAC system interactions.

OPERATIONS AND MAINTENANCE SAVINGS

Savings come from replacement of existing/older lighting systems with newer equipment. Calculation of estimated Labor & Material Savings due to extended material life is limited to 2.5% of the lighting retrofit customer cost, or $7,000 annually. This will escalate at 3% for the first 5 years, dropping down to zero in year 15 and remain at zero to year 20.

FORMULAS, ASSUMPTIONS, AND KEY DATA

Energy savings for this measure were calculated using a spreadsheet analysis tool. Key formulas include:

1. Baseline demand = Number of fixtures x Watts per existing fixture (or Ensemble watts of controlled fixtures) x Demand diversity factor ÷ 1,000 [kW]
2. Baseline energy use = Baseline demand x Baseline Annual hours ÷ (Demand diversity factor) [kWh]
3. Proposed demand = Number of fixtures x Watts per retrofitted fixture (or Ensemble watts of controlled fixtures x 0.70) x Demand diversity factor ÷ 1,000
4. Proposed energy use = Proposed demand x Annual hours ÷ (Demand diversity factor x 0.7 for Lighting Controls Retrofit) + Heating system energy interaction [kWh, MMBTU]
5. Heating system energy interaction = Monthly lighting demand reduction x 3,412 x Percent heat returned from lights to HVAC system x Percent of area affected within 15 feet of building perimeter x Coincident heating hours per year ÷ (Heating plant efficiency x 1,000,000) [MMBTU]

The number of each type of fixture and existing fixture wattages are based on survey data and ANSI data. Retrofitted fixture wattages are based on manufacturer's data for the proposed lamp and ballast combination. Annual hours and demand diversity factors are based on logger data acquired over a four to five week period during the technical energy audit. Weather data is based on a compilation by Energy 10 Weathermaker for Granby, Colorado. Other data used in the above formulas are derived from both surveys and building plans.

The ensemble watts of fixtures to be controlled are based on survey data and ANSI data. Baseline annual hours and demand diversity factors are based on logger data acquired over a four to five week period during the technical energy audit. Proposed annual hours are based on space-specific percentage reductions provided by occupancy sensor manufacturers, or in the case of daylight harvesting controls, binned daylight hours for Granby, Colorado. The 30% demand reduction due to lighting controls is based on the *EPRI Lighting Fundamentals Handbook*. Coincident heating hours data is based on a compilation by Energy 10 Weathermaker for Granby, Colorado. Other data used in the above formulas are derived from both surveys and building plans.

An electronic copy of the spreadsheet analysis tool used to calculate savings for this measure is included on the CD accompanying this report.

ECM 6.1: WINDOW & DOOR WEATHERIZATION

▪ ESTIMATED ENERGY SAVINGS

Energy savings for window caulking the original building construction windows and adding weather stripping to exterior doors at Middle Park High School, Fraser Valley Elementary School, Granby Elementary School, Grand Lake Elementary School, Indian Peaks Charter School, and the District Office were calculated using the following formula. The annual heating energy savings, *ES*, obtained by reducing the heating load due to infiltration can be estimated from the following relationship:

$$ES = \frac{KH \times A \times E \times FA \times FT}{EFF}$$

where,

KH	=	infiltration heat loss constant, Btu/yr·in^2
A	=	area of infiltration opening, in^2
E	=	effectiveness of opening (0.5 for perpendicular, north or south, winds; 0.25 for diagonal, east or west winds)[1], no units
FA	=	fraction of infiltration avoidable, no units
FT	=	fraction of the year that infiltration occurs, no units
EFF	=	efficiency of heating system, no units

The fraction of the year that infiltration occurs estimated from total bin hours at a 60 °F base as 7,616/8,760 = 0.87. By weather-stripping, infiltration can be reduced by 100% (i.e., *FA* = 1). The estimated efficiency of the heating system is 80%. The infiltration heat loss constant is determined from the following relationship:

$$KH = \frac{C_p \times \rho \times V \times DHH \times C_1}{C_2 \times C_3}$$

where,

C_p	=	specific heat of air, 0.24 Btu/lb°F
ρ	=	density of air, 0.0557 lb/ft^3 (@ 8,000 feet above sea level)
V	=	velocity of average wind, 6.2 MPH, 546 ft/min
DHH	=	degree heating hours[2] (60 °F base), 215,885 °F h/yr
C_1	=	conversion constant, 60 min/h
C_2	=	conversion constant, 144 in^2/ft^2
C3	=	conversion constant, 1,000,000 Btu/MMBtu

The heating set-point temperature for the areas considered is 70 °F. An estimated internal gain of 10 °F is generated by the activities that occur in the areas considered. Thus the outside temperature below which heating is needed is 70 - 10 = 60 °F.

1 **ASHRAE Handbook of Fundamentals 1989**, p. 23.8, Equation 18.

2 Calculated using Typical Meteorological Year (TMY2) data.

The degree heating hours at this 60 °F base is 215,885 °F h/yr. Thus, the heat-loss coefficient is calculated as follows:

$$KH = \frac{(0.24)(0.0557)(546)(215{,}885)(60)}{144} = 0.656\ MMBtu/yr\ in^2$$

The following tables give the total perimeter of the original building construction windows and exterior doors and an estimate of the infiltration area to be sealed at the facilities considered for this ECM. Table 4 assumes the average door infiltration crack is 1/8" on approximately 33% of the total perimeter and the average window crack is 1/32" on approximately 33% of the old windows. Table 5 shows the resulting energy and cost savings based on the formulas previously noted.

Table 4: Window and Door Weatherization Calculation Data

Facility	North/South Door Perimeter (inches)	North/South Window Perimeter (inches)	East/West Door Perimeter (inches)	East/West Window Perimeter (inches)	North/South Infiltration Reduction (inches)^2	East/West Infiltration Reduction (inches)^2
Middle Park High School	5,868	3,660	5,484	3,420	280	261
Fraser Valley Elementary School	1,980	1,584	4,140	3,312	98	206
Granby Elementary School	2,784	6,746	1,188	4,498	186	96
Grand Lake Elementary School	2,232	5,424	636	1,356	149	40
Indian Peaks Charter School	0	238	876	482	2.5	41.5
District Office	1,356	576	0	864	62	9

Table 5: Multiple buildings – projected annual energy and cost savings

	Electricity					
	Consumption (kWh)	Demand (kW)	Fossil Fuel (MMBTU)	Electric Cost	Fossil Fuel Cost	Total Cost
Baseline	0	0	1,685	$0	$0	$0
Proposed	0	0	1,292	$0	-$3,306	-$3,306
Savings	0	0	393	$0	$3,306	$3,306

- ## SAVINGS INTERACTIONS

There are no savings interactions with this measure.

- ## OPERATIONS AND MAINTENANCE SAVINGS

Savings come from replacement of worn gaskets, seals & door swipes and elimination of purchased material by District. Calculation of estimated Labor & Material Savings due to extended material life limited to 5% of building envelope retrofit customer cost, escalated at 3% for the life of the project.

- ## FORMULAS, ASSUMPTIONS, AND KEY DATA

Energy savings for this measure were calculated using the formulas mentioned above.

ECM 8.1: INSTALL VARIABLE FREQUENCY DRIVES

ESTIMATED ENERGY SAVINGS

Energy savings for installing variable frequency drives, VFD's, for the Gym, Auditorium, and Cafeteria/Commons Areas at Middle Park High School, East Grand Middle School and Fraser Valley Elementary School were calculated using a spreadsheet analysis tool based on the difference in fully occupied bin hours, (games, concerts, assemblies), and normal physical education and classroom activities. ASHRAE Standard 62.1, 2004 was used to calculate the partial occupancy ventilation requirements and those calculations are included in the Appendix for the three schools affected by this ECM. Note, HVU-1 Auditorium and HVU-9 Old Gym at the Middle Park High School require new supply fan motors and energy savings are increased through the difference in efficiency of the existing motors and the new premium efficiency motors. Projected annual energy unit and cost savings are shown as follows. Note, the table only shows the fan energy savings. The gas energy savings from reduced airflows is included in ECM 3.1 Control System Upgrades and is denoted in the description as such as demand control ventilation savings.

Table 6: Multiple buildings - projected annual energy and cost savings

	Electricity					
	Consumption (kWh)	Demand (kW)	Fossil Fuel (MMBTU)	Electric Cost	Fossil Fuel Cost	Total Cost
Baseline	113,051	62	0	$6,632	$0	$6,632
Proposed	19,816	62	0	$1,163	$0	$1,163
Savings	92,234	0	0	$5,469	$0	$5,469

Projected cost savings are 82% of the baseline.

SAVINGS INTERACTIONS

There are no savings interactions with this measure.

OPERATIONS AND MAINTENANCE SAVINGS

There are no O&M savings with this measure.

FORMULAS, ASSUMPTIONS, AND KEY DATA

Energy savings for this measure were calculated using the following formula:

1. Fan Power Baseline Energy Usage = Fan Motor Load Factor x Fan Motor Horsepower x 0.746 kW/hp. [kW]
2. Fan Power Proposed energy usage = Fan Power Baseline Energy Usage x (Proposed Supply Airflow/Current Supply Airflow)^3 [kW]
3. Energy Savings = (Fan Power Baseline – Fan Power Proposed) x (Total Bin Occupied Hours – Bin Occupied Hours For Games, Concerts, Events) x 1 + (1/Existing Motor Efficiency – 1/Proposed Motor Efficiency) [kWh]

An electronic copy of the spreadsheet analysis tool used to calculate savings for this measure is included on the CD accompanying this report.

ECM 8.2: Domestic Cold Water Booster Pump Replacement

- Estimated Energy Savings

No energy savings are anticipated for this measure.

- Operations and Maintenance Savings

O&M savings come from avoided repairs on domestic cold water system at East Grand Elementary School ($2,000/year per John Weninger, Director of Maintenance/Facilities). O&M savings escalate at 3% for the first 15 years, and drop by 10% per year through year 20.

ECM 12.1: Uninterruptible Power Supply Replacement

- Estimated Energy Savings

There are no energy savings anticipated for this measure.

- Operations and Maintenance Savings

O&M savings come from avoidance of repair material purchases, $500/yr., escalated 3% for life of project.

ECM 14.0: Upgrade Fire Alarm System

- Estimated Energy Savings

There are no energy savings anticipated for this measure.

- Operations and Maintenance Savings

Savings come from reduced purchased material & supplies for older/obsolete equipment and elimination of Simplex monitoring service. Overall O&M savings for the control system improvements as a part of this ESPC are projected to amount to $7,800 annually and to escalate at 3% for the first 15 years and drop 10% per year to year 20.

SAVINGS CALCULATIONS: ALL PROPOSED MEASURES

BASE YEAR AND POST-RETROFIT ENERGY USE AND COST

The base year, adjusted base year, and post-retrofit energy use and cost figures for all proposed measures are shown in the following table. Base year and adjusted base year data is also provided in the overview section of this document. Post retrofit data is determined by subtracting the savings calculated for individual measures from the adjusted baseline data. Note that savings shown are "projected", not "guaranteed."

Table 7 Cost Savings Of All Recommended ECM's

	Electricity					
	Consumption (kWh)	Demand (kW)	Fossil Fuel (MMBTU)	Electric Cost	Fossil Fuel Cost	Total Cost
Baseline	2,592,244	8,010	19,059	$214,171	$155,205	$369,376
Adjusted baseline	2,998,298	8,236	20,514	$245,389	$170,904	$416,293
Proposed	2,265,437	6,668	17,998	$193,702	$149,763	$343,465
Savings	732,861	1,568	2,516	$51,687	$21,141	$72,828
Guaranteed Savings				$48,153	$18,840	$66,993

Annual savings estimates

The annual energy savings for each year in the 20 year contract period for all proposed measures are shown in table 8. All measures are assumed to remain in place and be capable of generating savings for the entire 20 year period. Energy unit savings are assumed to be constant for each year of the performance period. Energy cost savings are escalated at the mutually agreed-upon rate of 4.25% per year. Guaranteed energy savings are equal to 0.92 x projected energy savings.

Table 8

Year	Electric Cost	Fossil Fuel Cost	Total Cost
1	$48,153	$18,840	$66,992
2	$50,200	$19,640	$69,839
3	$52,333	$20,475	$72,807
4	$54,557	$21,345	$75,902
5	$56,876	$22,252	$79,127
6	$59,293	$23,198	$82,490
7	$61,813	$24,184	$85,996
8	$64,440	$25,212	$89,651
9	$67,179	$26,283	$93,461
10	$70,034	$27,400	$97,433
11	$73,010	$28,565	$101,574
12	$76,113	$29,779	$105,891
13	$79,348	$31,045	$110,392
14	$82,720	$32,364	$115,083
15	$86,236	$33,739	$119,974
16	$89,901	$35,173	$125,073
17	$93,722	$36,668	$130,389
18	$97,705	$38,227	$135,930
19	$101,858	$39,851	$141,707
20	$106,187	$41,545	$147,730

SUPPORTING CALCULATIONS AND ASSUMPTIONS USED FOR DEVELOPING SAVINGS ESTIMATES

Savings estimates were developed using a combination of spreadsheet analysis tools and Trane Trace 700 building models. Electronic copies of all of these models are included on the CD accompanying this report.

CONCLUSIONS AND RECOMMENDATIONS

During audit agreement negotiations, we established four project goals in collaboration with the School District:

1. Reduce energy consumption, demand & cost.
2. Revitalize infrastructure for comfort, lighting quality, etc.
3. Reduce the environmental impact from the School District.
4. Provide a 20-year revenue neutral project where:
    a. Bulk of improvements are paid out of guaranteed annual energy, water and operations & maintenance ("O&M") cost savings
    b. Annual savings > (Loan payments + measurement & verification ("M&V") costs)

We collaborated closely with the School District (including key facility management and maintenance staff) to identify a comprehensive plan to achieve these objectives. A preliminary shopping list of energy conservation and facility improvement measures was presented to the School District on February 12, 2009. The list of measures was pared down by the School District and the Honeywell Building Solutions team at that time to a package of measures that we all agreed was optimal in terms of meeting the above objectives. We then completed the due diligence (design, savings modeling, competitive bidding to subs and suppliers, preparation of this audit deliverable) to validate the viability of this package.

We strongly encourage you to consider full implementation of the proposed Honeywell Performance Contract for several reasons:

1. Guaranteed first year energy savings of $66,993 will result in a 16.5% cost reduction versus your adjusted baseline.
2. First year projections indicate a carbon footprint reduction of roughly 1 million pounds of CO_2 as a direct result of the project's energy efficiency measures.
3. The project will resolve several indoor air quality, occupant comfort and equipment reliability issues as part of the project and ensures the sustainability of the savings:

Granby Elementary School

a. The addition of a heat recovery exhaust system will bring the floor area of the Gym into compliance with the indoor air quality standard of care outlined in ASHRAE 62.1-2007.

Fraser Valley Elementary School

a. Upgrade of classroom unit ventilators will result in improved comfort, as well as energy savings.
b. The installation of a plate heat exchanger will combine two separate boiler plants within the building to provide much needed redundancy to the older single boiler plant. This enables the single 10-year old boiler to continue to remain in service with back-up heating provided by the newer two boiler plant. This measure saves implementation costs for replacement of the existing boiler with two new boilers providing redundancy.

East Grand Middle School

a. The domestic cold water booster pump upgrade will replace two pumps that are not necessarily in very reliable operating condition and installed in a location that is very difficult to service and maintain.

Grand Lake Elementary School

a. Upgrade of classroom unit ventilators will result in improved comfort, as well as energy savings.
b. The boiler system upgrades will replace a single boiler with two new boilers providing much needed redundancy, reduced energy and maintenance costs and improved thermal comfort.

District Office

a. The addition of a heat recovery exhaust system to the Warehouse will eliminate the current problems with exhaust fumes being introduced into the adjacent offices from vehicles running in the Warehouse. The inclusion of waste heat recovery will substantially reduce the energy costs associated with the heating of make-up outside air required for the exhaust system. In addition, carbon monoxide sensor control of the new heat recovery unit will further reduce operating hours and subsequent energy costs.
b. The installation of a high-efficiency furnace with DX cooling will provide thermal comfort to the Warehouse offices which currently are heated only by inefficient gas-fired unit heaters.

5. COST ESTIMATE

A. DETAILED SCOPE

Detailed scope information is provided previously, in TEA report section *"3. ECM Descriptions."*
In order to provide more detail on *ECM 5.1: Lighting Fixture/Control Retrofit* and how it pertains to pricing, we have included the following information.

Lighting Fixture Code Key

Code Component	Description
N	New Fixture
1L	1 Lamp
2L	2 Lamp
3L	3 Lamp
4L	4 Lamp
6L	6 Lamp
8L	8 Lamp
F40	40 Watt
2T12	2' T12 Lamp
3T12	3' T12 Lamp
4T12	4' T12 Lamp
8T12	8' T12 Lamp
2T8	2' T8 Lamp
3T8	3' T8 Lamp
4T8	4' T8 Lamp
8T8	8' T8 Lamp
4T5	4' T5 Lamp
U6T8	6" U-Bend T8 Lamp
U6T12	6" U-Bend T12 Lamp
1000HID	1000 Watt HID
400HID	400 Watt HID
350HID	350 Watt HID
250HID	250 Watt HID
175HID	175 Watt HID
100HID	100 Watt HID
70HID	70 Watt HID
100IN	100 Watt Incandescent
75IN	75 Watt Incandescent
60IN	60 Watt Incandescent
15EX	15 Watt Incandescent Exit
13CF	13 Watt Compact Fluorescent
15CF	15 Watt Compact Fluorescent
18CF	18 Watt Compact Fluorescent
20CF	20 Watt Compact Fluorescent
23CF	23 Watt Compact Fluorescent
25CF	25 Watt Compact Fluorescent
26CF	26 Watt Compact Fluorescent
32CF	32 Watt Compact Fluorescent
42CF	42 Watt Compact Fluorescent
SP	Standard Power Ballast (.88 BF)
LP	Low Power Ballast (.77 BF)
HP	High Power Ballast (1.18 BF)
EB	Electronic Ballast
40W	40 Watt Lamp
LR	Linear Reactor Ballast
BIAX	Biaxial Lamp
NR	No Retrofit
OS	Occupancy Sensor Controlled
R30	R30 Reflector Lamp
CONV	Conversion kit required
PC	Photo Cell Controlled
PCDIM	Requires Photo-Control Active Dimming
4'CONV	Conversion kit required for 4' fixture
8'CONV	Conversion kit required for 8' fixture
ASYMRFL	Asymetric Reflector

Lighting Fixture Code Key, Cont.'

Code Component	Description
EM	24 hour operation, may have battery ballast
DUAL	Dual Ballasted Fixture
HIGH	High location, may require tall ladder or scaffolding
22RFL	2' x 2' Reflector Kit
24RFL	2' x 4' Reflector Kit
24'	24' high location, may require lift or scaffolding
30'	30' high location, may require lift or scaffolding
DLMP	De-Lamp
ADDSW	Add to Switch
LED EXIT	LED Exit Sign
NLEDEX-G-B	New LED Exit Sign, Green with Battery
NO RETRO	No Retrofit
NOTHING	Nothing Exists
REMOVE	Remove Existing Fixture
PHOTOCELL	Install Photo Control
FIXT MOUNT IR SENSOR	Fixture Mounted Infrared Occupancy Sensor
CDT	Ceiling Mounted Dual-Technology Occupancy Sensor
CIR	Ceiling Mounted Infrared Occupancy Sensor
WCDT	Wall/Corner Mounted Dual-Technology Occupancy Sensor
WCIR	Wall/Corner Mounted Infrared Occupancy Sensor
WET LOC IR	Wet Location Rated
WSDT	Wall Switch Dual-Technology Occupancy Sensor
WSIR	Wall Switch Infrared Occupancy Sensor
WSIR-2P	Wall Switch Infrared Occupancy Sensor, 2 Poles
WSIR-PC	Wall Switch Infrared Occupancy Sensor, with Photo-control
CPY	Canopy Fixture
WR	Wrap Fixture
ST	Strip Fixture
WL	Wall Mounted Fixture
2X2TR	2' x 2' Troffer Fixture
IND	Industrial Fixture
DEC	Decorative Fixture
LNS	Lens
WG	Wire Guard
TG	Tube Guard

BUILDING: Middle Park High School
LIGHTING CONTRACTOR: Contractor Name
ELECTRIC CONSUMPTION RATE: $0.05900 per kWh
ELECTRIC DEMAND RATE: $4.35 per kW
HEATING FUEL RATE: $8.290 per MMBtu

ECM 5.1: Lighting system upgrades

		EXISTING					PROPOSED								
AREA	USAGE TYPE	EXISTING FIXTURE DESCRIPTION	ANNUAL HOURS	Demand Div Factor	QTY	WATTS EACH*	RETROFIT DESCRIPTION	ANNUAL HOURS	Demand Div Factor	QTY	WATTS EACH**	UNIT PRICE	TOTAL EXTENDED PRICE	TOTAL KW SAVED	KWH SAVED PER YR
ENTRY VESTIBULE	Halls High School	1L42CF	4163	100%	2	42	NO RETRO	4163	100%	2	42	$0.00	$0.00	0.00	0
MAIN OFFICE	Common Admin	2L4T8-SP	2250	100%	4	58	NO RETRO	2250	100%	4	58	$0.00	$0.00	0.00	0
MAIN OFFICE	Common Admin	2L4T8-SP	2250	100%	1	58	2L4T8-SP-PCDIM	1875	50%	1	58	$91.41	$91.41	0.03	22
MAIN OFFICE	Common Admin	3L4T8-SP	2250	100%	2	85	NO RETRO	2250	100%	2	85	$0.00	$0.00	0.00	0
MAIN OFFICE	Common Admin	3L4T8-SP	2250	100%	2	85	3L4T8-SP-PCDIM	1875	50%	2	96	$154.61	$309.23	0.07	23
COPY AREA	Common Admin	2L4T8-SP	2250	100%	2	58	NO RETRO	2250	100%	2	58	$0.00	$0.00	0.00	0
COPY AREA	Common Admin	3L4T8-SP	2250	100%	1	85	NO RETRO	2250	100%	1	85	$0.00	$0.00	0.00	0
CONFERENCE ROOM	Conference	3L4T8-SP-DUAL	2250	40%	3	90	3L4T8-SP-DUAL-NR-OS	1575	30%	3	90	$0.00	$0.00	0.03	182
CONFERENCE ROOM	Conference	NOTHING	2250	40%	1	0	WSIR	2250	40%	1	0	$79.32	$79.32	0.00	0
PRINCIPAL OFFICE 101B	Offices, Private	3L4T8-SP-DUAL	2250	50%	4	90	3L4T8-SP-DUAL-NR-OS	1575	38%	4	90	$0.00	$0.00	0.05	243
PRINCIPAL OFFICE 101B	Offices, Private	NOTHING	2250	50%	1	0	WSDT	2250	50%	1	0	$114.31	$114.31	0.00	0
ASST PRINCIPAL 101C	Offices, Private	3L4T8-SP-DUAL	2250	50%	3	90	3L4T8-SP-DUAL-NR-OS	1008	38%	3	90	$0.00	$0.00	0.03	335
ASST PRINCIPAL 101C	Offices, Private	NOTHING	2250	50%	1	0	WSDT	1575	50%	1	0	$114.31	$114.31	0.00	0
ELECTRIC ROOM	Mechanical	4L4T8-SP	2250	10%	1	112	NO RETRO	2250	10%	1	112	$0.00	$0.00	0.00	0
RESTROOM	Private RR	1L42CF	2250	10%	2	42	1L42CF-NR-OS	1575	8%	2	42	$0.00	$0.00	0.00	57
RESTROOM	Private RR	NOTHING	2250	10%	1	0	WSIR	2250	10%	1	0	$79.32	$79.32	0.00	0
NUTRITION 103	Kitchen	3L4T8-SP	1000	90%	4	85	NO RETRO	1000	90%	4	85	$0.00	$0.00	0.00	0
CONCESSION 105	Storage	3L4T8-SP	1000	20%	2	85	NO RETRO	1000	20%	2	85	$0.00	$0.00	0.00	0
RRS	Private RR	1L42CF	1000	10%	3	42	NO RETRO	1000	10%	3	42	$0.00	$0.00	0.00	0
MENS RR	Halls High School	3L4T8-SP	4163	100%	3	85	NO RETRO	4163	100%	3	85	$0.00	$0.00	0.00	0
WOMENS RR	Halls High School	3L4T8-SP	4163	100%	6	85	NO RETRO	4163	100%	6	85	$0.00	$0.00	0.00	0
SOUTH GYM	Gym	8L42CF	2733	100%	45	372	8L42CF-NR-OS	1913	75%	45	372	$0.00	$0.00	4.19	13,725
SOUTH GYM	Gym	NOTHING	2733	100%	4	0	WCIR	2733	100%	4	0	$316.78	$1,267.12	0.00	0
SOUTH GYM	EM/Night	LED EXIT	8766	100%	3	3	NO RETRO	8766	100%	3	3	$0.00	$0.00	0.00	0
GYM STORAGE 607	Storage	4L4T8-SP	2250	20%	1	112	4L4T8-SP-NR-OS	1575	15%	1	112	$0.00	$0.00	0.01	76
GYM STORAGE 607	Storage	NOTHING	2250	20%	1	0	WSIR	2250	20%	1	0	$79.32	$79.32	0.00	0
GYM STOR/OFFICE 609	Offices, Private	4L4T8-SP	2250	50%	2	112	4L4T8-SP-NR-OS	1575	38%	2	112	$0.00	$0.00	0.03	151
GYM STOR/OFFICE 609	Offices, Private	NOTHING	2250	50%	1	0	WSDT	2250	50%	1	0	$114.31	$114.31	0.00	0
LOCKER ENTRY	Gym	1L42CF	2733	100%	4	42	NO RETRO	2733	100%	4	42	$0.00	$0.00	0.00	0
WOMENS LOCKERS	Gym	3L4T8-SP	2733	100%	9	85	NO RETRO	2733	100%	9	85	$0.00	$0.00	0.00	0
WOMENS LOCKERS	EM/Night	3L4T8-SP-EM	8766	100%	1	82	NO RETRO	8766	100%	1	82	$0.00	$0.00	0.00	0
WOMENS LOCKERS	EM/Night	LED EXIT	8766	100%	2	3	NO RETRO	8766	100%	2	3	$0.00	$0.00	0.00	0
WOMENS LOCKERS	Gym	1L42CF	2733	100%	2	42	NO RETRO	2733	100%	2	42	$0.00	$0.00	0.00	0
CUST / STOR	Storage	2L23CF	2250	20%	1	46	NO RETRO	2250	20%	1	46	$0.00	$0.00	0.00	0
MENS LOCKERS	Gym	3L4T8-SP	2733	100%	9	85	NO RETRO	2733	100%	9	85	$0.00	$0.00	0.00	0
MENS LOCKERS	EM/Night	3L4T8-SP-EM	8766	100%	1	82	NO RETRO	8766	100%	1	82	$0.00	$0.00	0.00	0
MENS LOCKERS	EM/Night	LED EXIT	8766	100%	2	3	NO RETRO	8766	100%	2	3	$0.00	$0.00	0.00	0
MENS LOCKERS	Gym	1L42CF	2733	100%	2	42	NO RETRO	2733	100%	2	42	$0.00	$0.00	0.00	0
CUST / STOR	Storage	2L23CF	2250	20%	1	46	NO RETRO	2250	20%	1	46	$0.00	$0.00	0.00	0
WEIGHT ROOM 611	Class	3L4T8-SP-OS	1987	100%	17	82	NO RETRO	1987	100%	17	82	$0.00	$0.00	0.00	0
WEIGHT ROOM 611	EM/Night	LED EXIT	8766	100%	1	3	NO RETRO	8766	100%	1	3	$0.00	$0.00	0.00	0
MECH 611A	Mechanical	4L4T8-SP	2250	10%	2	112	NO RETRO	2250	10%	2	112	$0.00	$0.00	0.00	0
OLD GYM	Gym	1L400HID	2733	100%	29	458	N6L4T8-HP-LNS-WG-OS	1913	75%	29	222	$438.15	$12,706.23	8.45	23,983
OLD GYM	Gym	NOTHING	2733	100%	4	0	WCIR	2733	100%	4	0	$316.78	$1,267.12	0.00	0
OLD GYM	EM/Night	LED EXIT	8766	100%	2	3	NO RETRO	8766	100%	2	3	$0.00	$0.00	0.00	0
GYM STORAGE 604A	Storage	3L4T12-EB-40W	2250	20%	4	105	2L4T8-SP-DLMP-OS	1575	15%	4	54	$35.47	$141.90	0.05	605
GYM STORAGE 604A	Storage	NOTHING	2250	20%	1	0	WSIR	2250	20%	1	0	$79.32	$79.32	0.00	0
GYM STORAGE MEZZ	Storage	2L8T8-SP	2250	20%	3	110	NO RETRO	2250	20%	3	110	$0.00	$0.00	0.00	0
WRESTLING ROOM 614	Class	2L8T8-SP	1987	100%	24	110	2L8T8-SP-NR-OS	1391	75%	24	110	$0.00	$0.00	0.66	1,573
WRESTLING ROOM 614	Class	NOTHING	1987	100%	2	0	WCIR	1987	100%	2	0	$256.93	$513.87	0.00	0
WRESTLING ROOM 614	EM/Night	LED EXIT	8766	100%	1	3	NO RETRO	8766	100%	1	3	$0.00	$0.00	0.00	0
GYM CORRIDOR	Halls High School	2L4T12-EB-40W	4163	100%	3	68	2L4T8-LP	4163	100%	3	48	$33.58	$100.74	0.06	250
GYM CORRIDOR	EM/Night	2L4T12-EB-40W-EM	8766	100%	1	68	2L4T8-LP-EM	8766	100%	1	48	$129.02	$129.02	0.02	175
GYM CORRIDOR	EM/Night	3L4T8-SP-EM	8766	100%	1	82	NO RETRO	8766	100%	1	82	$0.00	$0.00	0.00	0
GYM CORR VEST	Halls High School	2L13CF	4163	100%	1	26	NO RETRO	4163	100%	1	26	$0.00	$0.00	0.00	0
CLASS 618	Class	3L4T8-SP-DUAL	1987	100%	15	90	3L4T8-SP-DUAL-NR-OS	1391	75%	15	90	$0.00	$0.00	0.34	805
CLASS 618	Class	NOTHING	1987	100%	1	0	WCDT	1987	100%	1	0	$256.93	$256.93	0.00	0
TRAINING ROOM 616	Class	1L175HID	1987	100%	3	210	N4L4T8-HP-8TND-OS	1391	75%	3	151	$169.84	$509.52	0.29	622
TRAINING ROOM 616	Class	1L400HID	1987	100%	2	458	N4L4T8-HP-8TND-OS	1391	75%	2	151	$169.84	$339.68	0.69	1,400
TRAINING ROOM 618	Class	NOTHING	1987	100%	1	0	WCDT	1987	100%	1	0	$256.93	$256.93	0.00	0
TREATMENT 616A	Class	3L4T8-SP	1987	100%	2	85	3L4T8-SP-NR-OS	1391	75%	2	85	$0.00	$0.00	0.04	101
TREATMENT 616A	Class	NOTHING	1987	100%	1	0	WSIR	1987	100%	1	0	$79.32	$79.32	0.00	0
MENS LOCKER 612	Gym	2L4T12-EB-40W	2733	100%	10	68	2L4T8-LP-TG	2733	100%	10	48	$33.58	$335.81	0.20	547
MENS SHOWER	Gym	1L100IN	2733	100%	3	100	1L15CF	2733	100%	3	15	$13.16	$39.48	0.26	697
MENS COACH LKR 610	Offices, Private	2L4T12-EB-40W	2250	50%	1	68	2L4T8-LP-TG	2250	50%	1	48	$33.58	$33.58	0.01	45
MENS COACH OFF 608	Offices, Private	2L4T12-EB-40W	2250	50%	4	68	2L4T8-SP-OS	1575	38%	4	54	$33.58	$134.32	0.06	272
MENS COACH OFF 608	Offices, Private	NOTHING	2250	50%	1	0	WSIR	2250	50%	1	0	$79.32	$79.32	0.00	0
WOMENS COACH 606	Offices, Private	4L4T12-EB-40W	2250	50%	2	136	4L4T8-LP-OS	1575	38%	2	97	$45.11	$90.22	0.06	306
WOMENS COACH 606	Offices, Private	NOTHING	2250	50%	1	0	WSIR	2250	50%	1	0	$79.32	$79.32	0.00	0
WOMENS LOCKER 604	Gym	2L4T12-EB-40W	2733	100%	10	68	2L4T8-LP-TG	2733	100%	10	48	$33.58	$335.81	0.20	547
WOMENS SHOWER	Gym	1L100IN	2733	100%	3	100	1L15CF	2733	100%	3	15	$13.16	$39.48	0.26	697
WOMENS COACH LKR	Offices, Private	2L4T12-EB-40W	2250	50%	1	68	2L4T8-LP-TG	2250	50%	1	48	$33.58	$33.58	0.01	45
CUSTODIAL 502	Custodial	1L4T12-40W	2250	30%	1	43	1L4T8-SP	2250	30%	1	28	$31.45	$31.45	0.00	34
LAUNDRY 504	Custodial	1L4T12-40W	2250	30%	1	43	1L4T8-SP	2250	30%	1	28	$31.45	$31.45	0.00	34
CORR VEST	Halls High School	2L13CF	4163	100%	1	26	NO RETRO	4163	100%	1	26	$0.00	$0.00	0.00	0
ART CLASS 507	Class	2L8T8-SP	1987	100%	13	110	2L8T8-SP-NR-OS	1391	75%	13	110	$0.00	$0.00	0.36	852
ART CLASS 507	Class	2L4T12-EB-40W	1987	100%	6	68	2L4T8-SP-OS	1391	75%	6	54	$33.58	$201.49	0.17	360
ART CLASS 507	Class	NOTHING	1987	100%	1	0	WCDT	1987	100%	1	0	$256.93	$256.93	0.00	0
ART OFFICE	Offices, Private	2L4T12-EB-40W	2250	50%	2	68	2L4T8-SP-OS	1575	38%	2	54	$33.58	$67.16	0.03	136
ART OFFICE	Offices, Private	NOTHING	2250	50%	1	0	WSIR	2250	50%	1	0	$79.32	$79.32	0.00	0
ART STORAGE A	Storage	1L8T8-SP	2250	20%	1	70	1L8T8-SP-NR-OS	1575	15%	1	70	$0.00	$0.00	0.00	47
ART STORAGE A	Storage	NOTHING	2250	20%	1	0	WSIR	2250	20%	1	0	$79.32	$79.32	0.00	0
ART STORAGE B	Storage	1L8T8-SP	2250	20%	1	70	1L8T8-SP-NR-OS	1575	15%	1	70	$0.00	$0.00	0.00	47

ART STORAGE B	Storage	NOTHING	2250	20%	1	0	WSIR	2250	20%	1	0	$79.32	$79.32	0.00	0
ART DARK ROOM	Class	2L4T12-EB-40W	1987	100%	6	68	2L4T8-LP	1987	100%	6	48	$33.58	$201.49	0.12	238
ART RR	Private RR	2L100IN	2250	10%	1	200	N1L4T8-SP-4'WL	2250	10%	1	28	$121.87	$121.87	0.02	387
WELDING CLASS 505	Class	2L8T8-SP	1987	100%	14	110	NO RETRO	1987	100%	14	110	$0.00	$0.00	0.00	0
WELDING CLASS 505	Class	2L4T12-EB-40W	1987	100%	3	68	2L4T8-LP	1987	100%	3	48	$33.58	$100.74	0.06	119
WELDING CLASS 505	EM/Night	2L15EX	8766	100%	1	30	NLEDEX-G-B	8766	100%	1	3	$59.26	$59.26	0.03	237
WELDING OFFICE	Offices, Private	2L4T12-EB-40W	2250	50%	1	68	2L4T8-SP-OS	1575	38%	1	54	$33.58	$33.58	0.01	68
WELDING OFFICE	Offices, Private	NOTHING	2250	50%	1	0	WSIR	2250	50%	1	0	$79.32	$79.32	0.00	0
WELDING TOOL ROOM	Class	2L4T12-EB-40W	1987	100%	1	68	2L4T8-SP-OS	1391	75%	1	54	$33.58	$33.58	0.03	60
WELDING PROJECT RM	Class	2L8T8-SP	1987	100%	1	110	2L8T8-SP-NR-OS	1391	75%	1	110	$0.00	$0.00	0.03	66
DRAFTING 503	Class	2L4T12-EB-40W	1987	100%	13	68	2L4T8-SP-OS	1391	75%	13	54	$33.58	$436.55	0.36	780
DRAFTING 503	Class	NOTHING	1987	100%	1	0	WCDT	1987	100%	1	0	$256.93	$256.93	0.00	0
WOOD CLASS 513	Class	2L8T8-SP	1987	100%	19	110	NO RETRO	1987	100%	19	110	$0.00	$0.00	0.00	0
WOOD CLASS 513	EM/Night	2L15EX	8766	100%	1	30	NLEDEX-G-B	8766	100%	1	3	$59.26	$59.26	0.03	237
WOOD OFFICE	Offices, Private	2L4T12-EB-40W	2250	50%	1	68	2L4T8-SP-OS	1575	38%	1	54	$33.58	$33.58	0.01	68
WOOD OFFICE	Offices, Private	NOTHING	2250	50%	1	0	WSIR	2250	50%	1	0	$79.32	$79.32	0.00	0
WOOD PROJECT RM	Class	2L8T8-SP	1987	100%	2	110	NO RETRO	1987	100%	2	110	$0.00	$0.00	0.00	0
WOOD STORAGE	Class	1L8T8-SP	1987	100%	1	70	NO RETRO	1987	100%	1	70	$0.00	$0.00	0.00	0
WOOD TOOL ROOM	Class	1L4T12-40W	1987	100%	2	43	1L4T8-LP	1987	100%	2	25	$31.45	$62.89	0.04	72
WOOD FINISHING	Class	2L4T12-EB-40W	1987	100%	1	68	2L4T8-SP	1987	100%	1	54	$33.58	$33.58	0.01	28
MENS RESTROOM	Halls High School	2L4T12-EB-40W	4163	100%	6	68	REMOVE	4163	100%	6	0	$19.68	$118.07	0.41	1,699
MENS RESTROOM	Halls High School	NOTHING	4163	100%	3	0	N2L4T8-SP-8'WR	4163	100%	3	54	$161.94	$485.82	-0.16	-674
WOMENS RESTROOM	Halls High School	2L4T12-EB-40W	4163	100%	6	68	REMOVE	4163	100%	6	0	$19.68	$118.07	0.41	1,699
WOMENS RESTROOM	Halls High School	NOTHING	4163	100%	3	0	N2L4T8-SP-8'WR	4163	100%	3	54	$161.94	$485.82	-0.16	-674
KITCHEN	Kitchen	2L4T12-EB-40W	1000	100%	24	68	2L4T8-SP	1000	100%	24	54	$33.58	$805.94	0.34	336
KITCHEN	EM/Night	LED EXIT	8766	100%	1	3	NO RETRO	8766	100%	1	3	$0.00	$0.00	0.00	0
KITCHEN	Kitchen	2L4T12-EB-40W	1000	100%	1	68	2L4T8-LP	1000	100%	1	48	$33.58	$33.58	0.02	20
KITCHEN WHSE	Kitchen	1L8T8-SP	1000	100%	4	70	NO RETRO	1000	100%	4	70	$0.00	$0.00	0.00	0
KITCHEN WHSE	EM/Night	LED EXIT	8766	100%	1	3	NO RETRO	8766	100%	1	3	$0.00	$0.00	0.00	0
KITCHEN LAUNDRY	Kitchen	2L4T12-EB-40W	1000	100%	1	68	2L4T8-LP	1000	100%	1	48	$33.58	$33.58	0.02	20
KITCHEN RR	Private RR	2L100IN	2250	10%	1	200	N2L2T8-SP-2'WL	2250	10%	1	32	$147.88	$147.88	0.02	378
KITCHEN OFFICE	Offices, Private	2L4T12-EB-40W	2250	50%	1	68	2L4T8-SP-OS	1575	38%	1	54	$33.58	$33.58	0.01	68
KITCHEN OFFICE	Offices, Private	NOTHING	2250	50%	1	0	WSIR	2250	50%	1	0	$79.32	$79.32	0.00	0
CUST / MAINT OFF 302	Offices, Private	2L4T12-EB-40W	2250	50%	2	68	2L4T8-SP	1440	50%	2	54	$33.58	$67.16	0.01	150
CUST / MAINT OFF 302	Offices, Private	1L8T8-SP	2250	50%	3	70	NO RETRO	2250	50%	3	70	$0.00	$0.00	0.00	0
MECH / SHOP 304	Offices, Private	1L8T8-SP	2250	50%	7	70	NO RETRO	2250	50%	7	70	$0.00	$0.00	0.00	0
MECH / SHOP 304	Offices, Private	LED EXIT	2250	50%	1	3	NO RETRO	2250	50%	1	3	$0.00	$0.00	0.00	0
CLASS 306 ENTRY	Class	2L4T12-EB-40W	1987	100%	4	68	2L4T8-SP	1987	100%	4	54	$33.58	$134.32	0.06	111
CLASS 306 ENTRY	Class	NOTHING	1987	100%	1	0	CIR	1987	100%	1	0	$256.93	$256.93	0.00	0
CLASS 306	Class	2L4T12-EB-40W	1987	100%	12	68	2L4T8-SP-OS	1391	75%	12	54	$33.58	$402.97	0.33	720
CLASS 306	Class	NOTHING	1987	100%	1	0	WCDT	1987	100%	1	0	$256.93	$256.93	0.00	0
COOKING	Class	2L4T12-EB-40W	1987	100%	12	68	2L4T8-SP-OS	1391	75%	12	54	$33.58	$402.97	0.33	720
COOKING	Class	NOTHING	1987	100%	3	0	WCDT	1987	100%	3	0	$256.93	$770.80	0.00	0
LAUNDRY	Custodial	2L4T12-EB-40W	2250	30%	1	68	2L4T8-SP-OS	1575	23%	1	54	$33.58	$33.58	0.01	68
LAUNDRY	Custodial	NOTHING	2250	30%	1	0	WSIR	2250	30%	1	0	$79.32	$79.32	0.00	0
STAFF LOUNGE	Offices, Private	3L4T8-SP-DUAL	2250	50%	10	90	3L4T8-SP-DUAL-NR-OS	1575	38%	10	90	$0.00	$0.00	0.11	608
STAFF LOUNGE	Offices, Private	NOTHING	2250	50%	1	0	WCDT	2250	50%	1	0	$256.93	$256.93	0.00	0
MEDIA CENTER 212	Library	2L4T12-EB-40W	2000	90%	20	68	2L4T8-SP-HIGH	2000	90%	20	54	$39.95	$799.05	0.25	560
MEDIA CENTER 212	Library	2L4T12-EB-40W	2000	90%	18	68	2L4T8-SP	2000	90%	18	54	$33.58	$604.46	0.23	504
MEDIA CLASS AREA	Class	3L4T8-SP	1987	100%	9	85	3L4T8-SP-NR-OS	1391	75%	9	85	$0.00	$0.00	0.19	456
MEDIA CLASS AREA	Class	NOTHING	1987	100%	1	0	WCDT	1987	100%	1	0	$256.93	$256.93	0.00	0
MEDIA OFFICE	Offices, Private	2L4T12-EB-40W	2250	50%	2	68	2L4T8-SP-OS	1575	38%	2	54	$33.58	$67.16	0.03	136
MEDIA OFFICE	Offices, Private	NOTHING	2250	50%	1	0	WSIR	2250	50%	1	0	$79.32	$79.32	0.00	0
MEDIA WORK ROOM	Offices, Private	2L4T12-EB-40W	2250	50%	2	68	2L4T8-SP-OS	1575	38%	2	54	$33.58	$67.16	0.03	136
MEDIA WORK ROOM	Offices, Private	NOTHING	2250	50%	1	0	WSIR	2250	50%	1	0	$79.32	$79.32	0.00	0
MEDIA CORRIDOR	Halls High School	2L4T12-EB-40W	4163	100%	6	68	2L4T8-LP	4163	100%	6	48	$33.58	$201.49	0.12	500
OFFICE 214	Offices, Private	2L4T12-EB-40W	2250	50%	2	68	2L4T8-SP-OS	1575	38%	2	54	$33.58	$67.16	0.03	136
OFFICE 214	Offices, Private	NOTHING	2250	50%	1	0	WSIR	2250	50%	1	0	$79.32	$79.32	0.00	0
KITCHEN / BREAK	Offices, Private	2L4T12-EB-40W	2250	50%	1	68	2L4T8-SP-OS	1575	38%	1	54	$33.58	$33.58	0.01	68
KITCHEN / BREAK	Offices, Private	NOTHING	2250	50%	1	0	WSIR	2250	50%	1	0	$79.32	$79.32	0.00	0
STUDIO CLASS 309	Class	2L4T12-EB-40W	1987	100%	6	68	2L4T8-SP-OS	1391	75%	6	54	$33.58	$201.49	0.17	360
STUDIO CLASS 309	Class	NOTHING	1987	100%	1	0	WCDT	1987	100%	1	0	$256.93	$256.93	0.00	0
MENS RESTROOM	Halls High School	2L4T12-EB-40W	4163	100%	3	68	REMOVE	4163	100%	3	0	$19.68	$59.04	0.20	849
MENS RESTROOM	Halls High School	NOTHING	4163	100%	3	0	N1L4T8-SP-4'WR	4163	100%	3	28	$121.87	$365.62	-0.08	-350
WOMENS RESTROOM	Halls High School	2L4T12-EB-40W	4163	100%	3	68	REMOVE	4163	100%	3	0	$19.68	$59.04	0.20	849
WOMENS RESTROOM	Halls High School	NOTHING	4163	100%	3	0	N1L4T8-SP-4'WR	4163	100%	3	28	$121.87	$365.62	-0.08	-350
COMPUTER LAB 303	Class	2L4T12-EB-40W	1987	100%	11	68	2L4T8-SP-OS	1391	75%	11	54	$33.58	$369.39	0.30	660
COMPUTER LAB 303	Class	NOTHING	1987	100%	1	0	WCDT	1987	100%	1	0	$256.93	$256.93	0.00	0
OFFICE / SERVER 303A	Offices, Private	2L4T12-EB-40W	2250	50%	1	68	2L4T8-SP-OS	1575	38%	1	54	$33.58	$33.58	0.01	68
OFFICE / SERVER 303A	Offices, Private	NOTHING	2250	50%	1	0	WSIR	2250	50%	1	0	$79.32	$79.32	0.00	0
CLASS 301	Class	3L4T8-SP-DUAL	1987	100%	12	90	3L4T8-SP-DUAL-NR-OS	1391	75%	12	90	$0.00	$0.00	0.27	644
CLASS 301	Class	NOTHING	1987	100%	1	0	WCDT	1987	100%	1	0	$256.93	$256.93	0.00	0
CAREER CENTER 104	Common Admin	3L4T8-SP-DUAL	2250	100%	8	90	NO RETRO	2250	100%	8	90	$0.00	$0.00	0.00	0
CAREER OFFICE 104A	Offices, Private	2L4T12-EB-40W	2250	50%	2	68	2L4T8-SP-OS	1575	38%	2	54	$33.58	$67.16	0.03	136
CAREER OFFICE 104A	Offices, Private	NOTHING	2250	50%	1	0	WSDT	2250	50%	1	0	$114.31	$114.31	0.00	0
CAREER COPY RM 104B	Offices, Private	2L4T12-EB-40W	2250	50%	1	68	2L4T8-SP-OS	1575	38%	1	54	$33.58	$33.58	0.01	68
CAREER COPY RM 104B	Offices, Private	NOTHING	2250	50%	1	0	WSIR	2250	50%	1	0	$79.32	$79.32	0.00	0
CAREER CLASSROOM 104C	Offices, Private	2L4T12-EB-40W	2250	50%	6	68	2L4T8-LP-OS	1575	38%	6	48	$33.58	$201.49	0.10	464
CAREER CLASSROOM 104C	Offices, Private	NOTHING	2250	50%	1	0	WCDT	2250	50%	1	0	$256.93	$256.93	0.00	0
CAREER BREAK RM 104E	Offices, Private	2L4T12-EB-40W	2250	50%	1	68	2L4T8-SP-OS	1575	38%	1	54	$33.58	$33.58	0.01	68
CAREER BREAK RM 104E	Offices, Private	NOTHING	2250	50%	1	0	WSIR	2250	50%	1	0	$79.32	$79.32	0.00	0
CAREER AREA RRS	Private RR	2L100IN	2250	10%	2	200	N2L2T8-SP-2'WL	1575	10%	2	32	$147.88	$295.75	0.03	799
FILE ROOM	Offices, Private	2L4T12-EB-40W	2250	50%	2	68	2L4T8-SP-OS	1575	38%	2	54	$33.58	$67.16	0.03	136
FILE ROOM	Offices, Private	NOTHING	2250	50%	1	0	WSIR	2250	50%	1	0	$79.32	$79.32	0.00	0
CAREER OFFICE 104F	Offices, Private	3L4T8-SP-DUAL	2250	50%	3	90	3L4T8-SP-DUAL-NR-OS	1575	38%	3	90	$0.00	$0.00	0.03	182
CAREER OFFICE 104F	Offices, Private	NOTHING	2250	50%	1	0	WSDT	2250	50%	1	0	$114.31	$114.31	0.00	0
CLINIC 102	Common Admin	3L4T8-SP-DUAL	2250	100%	6	90	NO RETRO	2250	100%	6	90	$0.00	$0.00	0.00	0
CLINIC RR	Private RR	2L100IN	2250	10%	1	200	N2L2T8-SP-2'WL	1575	10%	1	32	$147.88	$147.88	0.02	400
SPECIAL ED CLASS 202	Class	3L4T8-SP-DUAL-OS	1987	100%	8	82	NO RETRO	1987	100%	8	82	$0.00	$0.00	0.00	0
SPED FILE ROOM	Storage	3L4T8-SP	2250	20%	1	85	NO RETRO	2250	20%	1	85	$0.00	$0.00	0.00	0
SPED RR	Private RR	3L4T8-SP	2250	10%	1	85	NO RETRO	2250	10%	1	85	$0.00	$0.00	0.00	0
SPED OFFICE	Private RR	3L4T8-SP	2250	10%	2	85	NO RETRO	2250	10%	2	85	$0.00	$0.00	0.00	0
COMPUTER LAB 204	Class	2L4T12-EB-40W	1987	100%	11	68	2L4T8-SP-OS	1391	75%	11	54	$33.58	$369.39	0.30	660
COMPUTER LAB 204	Class	NOTHING	1987	100%	1	0	WCDT	1987	100%	1	0	$256.93	$256.93	0.00	0
TECH OFFICE	Offices, Private	2L4T12-EB-40W	2250	50%	2	68	2L4T8-SP-OS	1575	38%	2	54	$33.58	$67.16	0.03	136
TECH OFFICE	Offices, Private	NOTHING	2250	50%	1	0	WSIR	2250	50%	1	0	$79.32	$79.32	0.00	0
MENS RESTROOM	Halls High School	2L4T12-EB-40W	4163	100%	3	68	REMOVE	4163	100%	3	0	$19.68	$59.04	0.20	849

MENS RESTROOM	Halls High School	NOTHING	4163	100%	3	0	N1L4T8-SP-4'WR	4163	100%	3	28	$121.87	$365.62	-0.08	-350
WOMENS RESTROOM	Halls High School	2L4T12-EB-40W	4163	100%	3	68	REMOVE	4163	100%	3	0	$19.68	$59.04	0.20	849
WOMENS RESTROOM	Halls High School	NOTHING	4163	100%	3	0	N1L4T8-SP-4'WR	4163	100%	3	28	$121.87	$365.62	-0.08	-350
COMPUTER STOR 215	Storage	2L4T12-EB-40W	2250	20%	2	68	2L4T8-SP-OS	1575	15%	2	54	$33.58	$67.16	0.01	136
COMPUTER STOR 215	Storage	NOTHING	2250	20%	1	0	WSIR	2250	20%	1	0	$79.32	$79.32	0.00	0
CUSTODIAL 217	Custodial	2L4T12-40W	2250	30%	1	86	2L4T8-SP-OS	1575	23%	1	54	$33.58	$33.58	0.01	108
CUSTODIAL 217	Custodial	NOTHING	2250	30%	1	0	WSIR	2250	30%	1	0	$79.32	$79.32	0.00	0
STORAGE 217	Storage	2L4T12-EB-40W	2250	20%	1	68	2L4T8-SP-OS	1575	15%	1	54	$33.58	$33.58	0.01	68
STORAGE 217	Storage	NOTHING	2250	20%	1	0	WSIR	2250	20%	1	0	$79.32	$79.32	0.00	0
CLASS 219	Class	2L4T12-EB-40W	1987	100%	9	68	2L4T8-SP-OS	1391	75%	9	54	$33.58	$302.23	0.25	540
CLASS 219	Class	NOTHING	1987	100%	1	0	WCDT	1987	100%	1	0	$256.93	$256.93	0.00	0
CLASS 219	EM/Night	2L15EX	8766	100%	1	30	NLEDEX-G-B	8766	100%	1	3	$59.26	$59.26	0.03	237
STORAGE 1	Storage	2L4T12-EB-40W	2250	20%	1	68	2L4T8-SP-OS	1575	15%	1	54	$33.58	$33.58	0.01	68
STORAGE 1	Storage	NOTHING	2250	20%	1	0	WSIR	2250	20%	1	0	$79.32	$79.32	0.00	0
STORAGE 2	Storage	2L4T8-SP	2250	20%	2	58	2L4T8-SP-NR-OS	1575	15%	2	58	$0.00	$0.00	0.01	78
STORAGE 2	Storage	NOTHING	2250	20%	1	0	WSIR	2250	20%	1	0	$79.32	$79.32	0.00	0
CLASS 211	Class	2L4T12-EB-40W	1987	100%	12	68	2L4T8-SP-OS	1391	75%	12	54	$33.58	$402.97	0.33	720
CLASS 211	Class	NOTHING	1987	100%	1	0	WCDT	1987	100%	1	0	$256.93	$256.93	0.00	0
CLASS 213	Class	2L4T12-EB-40W	1987	100%	9	68	2L4T8-SP-OS	1391	75%	9	54	$33.58	$302.23	0.25	540
CLASS 213	Class	NOTHING	1987	100%	1	0	WCDT	1987	100%	1	0	$256.93	$256.93	0.00	0
CLASS 209	Class	2L4T12-EB-40W	1987	100%	9	68	2L4T8-SP-OS	1391	75%	9	54	$33.58	$302.23	0.25	540
CLASS 209	Class	NOTHING	1987	100%	1	0	WCDT	1987	100%	1	0	$256.93	$256.93	0.00	0
CLASS 207	Class	2L4T12-EB-40W	1987	100%	9	68	2L4T8-SP-OS	1391	75%	9	54	$33.58	$302.23	0.25	540
CLASS 207	Class	NOTHING	1987	100%	1	0	WCDT	1987	100%	1	0	$256.93	$256.93	0.00	0
CLASS 203	Class	2L4T12-EB-40W	1987	100%	9	68	2L4T8-SP-OS	1391	75%	9	54	$33.58	$302.23	0.25	540
CLASS 203	Class	NOTHING	1987	100%	1	0	WCDT	1987	100%	1	0	$256.93	$256.93	0.00	0
CLASS 205	Class	2L4T12-EB-40W	1987	100%	9	68	2L4T8-SP-OS	1391	75%	9	54	$33.58	$302.23	0.25	540
CLASS 205	Class	NOTHING	1987	100%	1	0	WCDT	1987	100%	1	0	$256.93	$256.93	0.00	0
MUSIC 201	Class	2L4T12-EB-40W	1987	100%	27	68	2L4T8-SP-OS-HIGH	1391	75%	27	54	$39.95	$1,078.72	0.74	1,620
MUSIC 201	Class	NOTHING	1987	100%	1	0	WCDT	1987	100%	1	0	$256.93	$256.93	0.00	0
MUSIC ENTRY	Class	2L4T12-40W	1987	100%	1	86	2L4T8-LP	1987	100%	1	48	$33.58	$33.58	0.04	76
MUSIC OFFICE	Offices, Private	2L4T12-EB-40W	2250	50%	2	68	2L4T8-SP-OS	1575	38%	2	54	$33.58	$67.16	0.03	136
MUSIC OFFICE	Offices, Private	NOTHING	2250	50%	1	0	WSIR	2250	50%	1	0	$79.32	$79.32	0.00	0
MUSIC WORK ROOM	Offices, Private	2L8T8-SP	2250	50%	2	110	2L8T8-SP-NR-OS	1575	38%	2	110	$0.00	$0.00	0.03	149
MUSIC WORK ROOM	Offices, Private	NOTHING	2250	50%	1	0	WSIR	2250	50%	1	0	$79.32	$79.32	0.00	0
MUSIC VESTIBULE	Class	2LU6T8-SP	1987	100%	1	58	N2L2T8-SP-2X2TR	1987	100%	1	32	$141.97	$141.97	0.03	52
UNIFORM STORAGE	Storage	2L4T12-EB-40W	2250	20%	1	68	2L4T8-SP-OS	1575	15%	1	54	$33.58	$33.58	0.01	68
UNIFORM STORAGE	Storage	NOTHING	2250	20%	1	0	WSIR	2250	20%	1	0	$79.32	$79.32	0.00	0
BAND STORAGE	Storage	2L4T12-EB-40W	2250	20%	1	68	2L4T8-SP-OS	1575	15%	1	54	$33.58	$33.58	0.01	68
BAND STORAGE	Storage	NOTHING	2250	20%	1	0	WSIR	2250	20%	1	0	$79.32	$79.32	0.00	0
ENSAMBLE	Offices, Private	2L4T12-EB-40W	2250	50%	6	68	2L4T8-SP-OS-HIGH	1575	38%	6	54	$39.95	$239.72	0.08	408
ENSAMBLE	Offices, Private	NOTHING	2250	50%	1	0	WCIR	2250	50%	1	0	$256.93	$256.93	0.00	0
ENSAMBLE VESTIBULE	Offices, Private	2L4T12-EB-40W	2250	50%	1	68	2L4T8-LP	2250	50%	1	48	$33.58	$33.58	0.01	45
AUDITORIUM	Auditorium	2L4T12-EB-40W	2097	40%	13	68	2L4T8-SP	2097	40%	13	54	$33.58	$436.55	0.07	382
AUDITORIUM	EM/Night	LED EXIT	8766	100%	4	3	NO RETRO	8766	100%	4	3	$0.00	$0.00	0.00	0
SOUND BOOTH	Storage	2L4T12-EB-40W	2250	20%	1	68	2L4T8-SP	2250	20%	1	54	$33.58	$33.58	0.00	32
STAGE	Storage	2L8T8-SP	2250	20%	21	110	NO RETRO	2250	20%	21	110	$0.00	$0.00	0.00	0
STAGE STORAGE	Storage	2L8T8-SP	2250	20%	1	110	NO RETRO	2250	20%	1	110	$0.00	$0.00	0.00	0
WATER RISER	Storage	2L4T12-EB-40W	2250	20%	1	68	2L4T8-SP	2250	20%	1	54	$33.58	$33.58	0.00	32
STAGE RR	Private RR	2L100IN	2250	10%	1	200	N2L2T8-SP-WL	2250	10%	1	32	$147.88	$147.88	0.02	378
STORAGE 402	Storage	3L4T8-SP	2250	20%	4	85	3L4T8-SP-NR-OS	1575	15%	4	85	$0.00	$0.00	0.02	230
STORAGE 402	Storage	NOTHING	2250	20%	1	0	WSIR	2250	20%	1	0	$79.32	$79.32	0.00	0
SCIENCE 404	Class	2L4T12-EB-40W	1987	100%	15	68	2L4T8-SP-OS	1391	75%	15	54	$33.58	$503.71	0.41	900
SCIENCE 404	Class	NOTHING	1987	100%	1	0	WCDT	1987	100%	1	0	$256.93	$256.93	0.00	0
WORK ROOM 406	Offices, Private	3L4T8-SP-DUAL	1440	50%	8	90	3L4T8-SP-DUAL-NR-OS	1008	38%	8	90	$0.00	$0.00	0.09	311
WORK ROOM 406	Offices, Private	NOTHING	1440	50%	1	0	WCDT	1440	50%	1	0	$256.93	$256.93	0.00	0
SCIENCE 408	Class	3L4T8-SP-DUAL-OS	1987	100%	1	82	NO RETRO	1987	100%	1	82	$0.00	$0.00	0.00	0
SCIENCE 408	Class	3L2T8-SP-OS	1987	100%	1	45	NO RETRO	1987	100%	1	45	$0.00	$0.00	0.00	0
SCIENCE 401	Class	3L4T8-SP-DUAL	1987	100%	20	90	3L4T8-SP-DUAL-NR-OS	1391	75%	20	90	$0.00	$0.00	0.45	1,073
SCIENCE 401	Class	NOTHING	1987	100%	2	0	WCDT	1987	100%	2	0	$256.93	$513.87	0.00	0
SCIENCE 401	EM/Night	LED EXIT	8766	100%	2	3	NO RETRO	8766	100%	2	3	$0.00	$0.00	0.00	0
WORK / STOR 401A	Offices, Private	3L4T8-SP	2250	50%	4	85	3L4T8-SP-NR-OS	1575	38%	4	85	$0.00	$0.00	0.04	230
WORK / STOR 401A	Offices, Private	NOTHING	2250	50%	1	0	WSIR	2250	50%	1	0	$79.32	$79.32	0.00	0
CUST / STOR 403	Custodial	4L4T8-SP	2250	30%	1	112	4L4T8-SP-NR-OS	2250	23%	1	112	$0.00	$0.00	0.01	0
CUST / STOR 403	Custodial	NOTHING	2250	30%	1	0	WSIR	2250	30%	1	0	$79.32	$79.32	0.00	0
ELECTRIC ROOM 403A	Mechanical	2L4T8-SP	2250	10%	1	58	NO RETRO	2250	10%	1	58	$0.00	$0.00	0.00	0
CLASS 405	Class	3L4T8-SP-DUAL-OS	1987	100%	12	82	NO RETRO	1987	100%	12	82	$0.00	$0.00	0.00	0
CLASS 407	Class	3L4T8-SP-DUAL-OS	1987	100%	12	82	NO RETRO	1987	100%	12	82	$0.00	$0.00	0.00	0
CLASS 409	Class	3L4T8-SP-DUAL-OS	1987	100%	12	82	NO RETRO	1987	100%	12	82	$0.00	$0.00	0.00	0
CLASS 412	Class	3L4T8-SP-DUAL-OS	1987	100%	12	82	NO RETRO	1987	100%	12	82	$0.00	$0.00	0.00	0
CLASS 410	Class	3L4T8-SP-DUAL-OS	1987	100%	12	82	NO RETRO	1987	100%	12	82	$0.00	$0.00	0.00	0
FIRE RISER ROOM	Mechanical	4L4T8-SP	2250	10%	1	112	NO RETRO	2250	10%	1	112	$0.00	$0.00	0.00	0
CLASS 310	Class	4L4T8-SP	1987	100%	18	112	4L4T8-SP-NR-OS	1391	75%	18	112	$0.00	$0.00	0.50	1,202
CLASS 310	Class	NOTHING	1987	100%	1	0	WCDT	1987	100%	1	0	$256.93	$256.93	0.00	0
CLASS 310	EM/Night	LED EXIT	8766	100%	2	3	NO RETRO	8766	100%	2	3	$0.00	$0.00	0.00	0
WORK / STOR	Offices, Private	3L4T8-SP	2250	50%	2	85	3L4T8-SP-NR-OS	1575	38%	2	85	$0.00	$0.00	0.02	115
WORK / STOR	Offices, Private	NOTHING	2250	50%	1	0	WSIR	2250	50%	1	0	$79.32	$79.32	0.00	0
CLASS 312	Class	4L4T8-SP	1987	100%	9	112	4L4T8-SP-NR-OS	1391	75%	9	112	$0.00	$0.00	0.25	601
CLASS 312	Class	NOTHING	1987	100%	1	0	WCDT	1987	100%	1	0	$256.93	$256.93	0.00	0
CLASS 314	Class	4L4T8-SP	1987	100%	9	112	4L4T8-SP-NR-OS	1391	75%	9	112	$0.00	$0.00	0.25	601
CLASS 314	Class	NOTHING	1987	100%	1	0	WCDT	1987	100%	1	0	$256.93	$256.93	0.00	0
CLASS 311	Class	4L4T8-SP	1987	100%	9	112	4L4T8-SP-NR-OS	1391	75%	9	112	$0.00	$0.00	0.25	601
CLASS 311	Class	2L4T8-SP	1987	100%	3	58	2L4T8-SP-NR-OS	1391	75%	3	58	$0.00	$0.00	0.04	104
CLASS 311	Class	NOTHING	1987	100%	1	0	WCDT	1987	100%	1	0	$256.93	$256.93	0.00	0
CLASS 313	Class	4L4T8-SP	1987	100%	9	112	4L4T8-SP-NR-OS	1391	75%	9	112	$0.00	$0.00	0.25	601
CLASS 313	Class	2L4T8-SP	1987	100%	3	58	2L4T8-SP-NR-OS	1391	75%	3	58	$0.00	$0.00	0.04	104
CLASS 313	Class	NOTHING	1987	100%	1	0	WCDT	1987	100%	1	0	$256.93	$256.93	0.00	0
COMPUTER LAB 316	Class	3L4T8-SP	1987	100%	14	85	3L4T8-SP-NR-OS	1391	75%	14	85	$0.00	$0.00	0.30	709
COMPUTER LAB 316	Class	NOTHING	1987	100%	1	0	WCDT	1987	100%	1	0	$256.93	$256.93	0.00	0
COMPUTER LAB 319	Class	3L4T8-SP	1987	100%	14	85	3L4T8-SP-NR-OS	1391	75%	14	85	$0.00	$0.00	0.30	709
COMPUTER LAB 319	Class	NOTHING	1987	100%	1	0	WCDT	1987	100%	1	0	$256.93	$256.93	0.00	0
OFFICE / SERVER	Offices, Private	3L4T8-SP	2250	50%	1	85	3L4T8-SP-NR-OS	1575	38%	1	85	$0.00	$0.00	0.01	57
OFFICE / SERVER	Offices, Private	NOTHING	2250	50%	1	0	WSIR	2250	50%	1	0	$79.32	$79.32	0.00	0
ELECTRIC ROOM	Mechanical	3L4T8-SP	2250	10%	1	85	NO RETRO	2250	10%	1	85	$0.00	$0.00	0.00	0
CUSTODIAL	Custodial	3L4T8-SP	2250	30%	1	85	3L4T8-SP-NR-OS	1575	23%	1	85	$0.00	$0.00	0.01	57
CUSTODIAL	Custodial	NOTHING	2250	30%	1	0	WSIR	2250	30%	1	0	$79.32	$79.32	0.00	0
HALL 300	Halls High School	2LF40-8IAX	4163	100%	10	71	2LF40-8IAX-NR-PC	2082	50%	10	71	$0.00	$0.00	0.36	1,478

HALL 300	Halls High School	NOTHING	4163	100%	1	0	PHOTOCELL	4163	100%	1	0	$95.25	$95.25	0.00	0
HALL 300	Halls High School	2L13CF	4163	100%	4	26	NO RETRO	4163	100%	4	26	$0.00	$0.00	0.00	0
HALL 300	Halls High School	1L18CF	4163	100%	2	18	NO RETRO	4163	100%	2	18	$0.00	$0.00	0.00	0
HALL 300	Halls High School	2LT5HO	4163	100%	2	117	NO RETRO	4163	100%	2	117	$0.00	$0.00	0.00	0
HALL 300	EM/Night	LED EXIT	8766	100%	4	3	NO RETRO	8766	100%	4	3	$0.00	$0.00	0.00	0
HALL 300	Halls High School	2L4T12-EB-40W	4163	100%	20	68	2L4T8-SP	4163	100%	20	54	$33.58	$671.62	0.28	1,166
HALL 400	Halls High School	2L4T8-SP	4163	100%	14	58	NO RETRO	4163	100%	14	58	$0.00	$0.00	0.00	0
HALL 400	Halls High School	2LF40-BIAX	4163	100%	5	71	2LF40-BIAX-NR-PC	2082	50%	5	71	$0.00	$0.00	0.18	739
HALL 400	Halls High School	NOTHING	4163	100%	1	0	PHOTOCELL	4163	100%	1	0	$95.25	$95.25	0.00	0
HALL 400	Halls High School	1L42CF	4163	100%	2	42	NO RETRO	4163	100%	2	42	$0.00	$0.00	0.00	0
HALL 400	EM/Night	LED EXIT	8766	100%	5	3	NO RETRO	8766	100%	5	3	$0.00	$0.00	0.00	0
HALL 200	Halls High School	1L100IN	4163	100%	2	100	N2L13CF-CPY	4163	100%	2	26	$92.87	$185.75	0.15	616
HALL 200	Halls High School	2L4T12-EB-40W	4163	100%	21	68	2L4T8-SP	4163	100%	21	54	$33.58	$705.20	0.29	1,224
HALL 200	EM/Night	LED EXIT	8766	100%	5	3	NO RETRO	8766	100%	5	3	$0.00	$0.00	0.00	0
HALL 500	Halls High School	1L100IN	4163	100%	1	100	N2L13CF-CPY	4163	100%	1	26	$92.87	$92.87	0.07	308
HALL 500	Halls High School	2L4T12-EB-40W	4163	100%	10	68	2L4T8-SP	4163	100%	10	54	$33.58	$335.81	0.14	583
HALL 500	EM/Night	LED EXIT	8766	100%	2	3	NO RETRO	8766	100%	2	3	$0.00	$0.00	0.00	0
HALL 100	Halls High School	3L4T8-SP	4163	100%	8	85	2L4T8-SP-24RFL	4163	100%	8	54	$56.77	$454.16	0.25	1,032
HALL 100	EM/Night	LED EXIT	8766	100%	1	3	NO RETRO	8766	100%	1	3	$0.00	$0.00	0.00	0
COMMON / CAFETERIA	Halls High School	2L4T12-EB-40W	4163	100%	25	68	2L4T8-LP	4163	100%	25	48	$33.58	$839.52	0.50	2,082
COMMON / CAFETERIA	EM/Night	LED EXIT	8766	100%	2	3	NO RETRO	8766	100%	2	3	$0.00	$0.00	0.00	0
COMMON / CAFETERIA	Halls High School	3L4T8-SP	4163	100%	1	85	NO RETRO	4163	100%	1	85	$0.00	$0.00	0.00	0
COMMON / CAFETERIA	Halls High School	1L100HID	4163	100%	8	129	NO RETRO	4163	100%	8	129	$0.00	$0.00	0.00	0
COMMON / CAFETERIA	Halls High School	3L4T8-SP	4163	100%	17	85	NO RETRO	4163	100%	17	85	$0.00	$0.00	0.00	0
COMMON / CAFETERIA	Halls High School	3L4T8-SP	4163	100%	4	85	3L4T8-SP-PCDIM	2082	50%	4	96	$154.61	$618.46	0.15	616
COMMON / CAFETERIA	Halls High School	2L8T8-SP	4163	100%	14	110	2L4T8-SP-8'CONV-ASYMRFL	4163	100%	14	54	$57.91	$810.72	0.78	3,264
COMMON / CAFETERIA	Halls High School	2L4T8-SP	4163	100%	2	58	1L4T8-SP-4'CONV-ASYMRFL	4163	100%	2	28	$55.00	$109.99	0.06	250
COMMON / CAFETERIA	Halls High School	1L42CF	4163	100%	7	42	NO RETRO	4163	100%	7	42	$0.00	$0.00	0.00	0
COMMONS DISPLAY CASE	Halls High School	1L4T12-40W	4163	100%	3	43	1L4T8-LP	4163	100%	3	25	$31.45	$94.34	0.05	225
COMMONS DISPLAY CASE	Halls High School	1L4T8-SP	4163	100%	1	32	NO RETRO	4163	100%	1	32	$0.00	$0.00	0.00	0
COMMONS DISPLAY CASE	Halls High School	1L4T12-40W	4163	100%	6	43	1L4T8-LP	4163	100%	6	25	$31.45	$188.67	0.11	450
AUTO SHOP	Storage	3L4T8-SP	2250	20%	12	85	NO RETRO	2250	20%	12	85	$0.00	$0.00	0.00	0
MODULAR CLASSROOM	Storage	4L4T12-40W	2250	20%	12	172	2L4T8-SP-DLMP	2250	20%	12	54	$35.93	$431.17	0.28	3,186
MODULAR CLASSROOM	EM/Night	2L15EX	8766	100%	2	30	NLEDEX-G-B	8766	100%	2	3	$59.26	$118.53	0.05	473
TOTALS					**1340**					**1340**			**$52,599.24**	**31.75**	**99,865**

* Based on ANSI wattages - to be verified by contractor

** Based on manufacturer's wattages - to be verified by contractor

BUILDING: East Grand Middle School
LIGHTING CONTRACTOR: Contractor Name
ELECTRIC CONSUMPTION RATE: $0.05900 per kWh
ELECTRIC DEMAND RATE: $4.35 per kW
HEATING FUEL RATE: $8.290 per MMBtu

ECM 5.1: Lighting system upgrades

		EXISTING					PROPOSED								
AREA	USAGE TYPE	EXISTING FIXTURE DESCRIPTION	ANNUAL HOURS	Demand Div Factor	QTY	WATTS EACH*	RETROFIT DESCRIPTION	ANNUAL HOURS	Demand Div Factor	QTY	WATTS EACH**	UNIT PRICE	TOTAL EXTENDED PRICE	TOTAL KW SAVED	K SA PE
COMMONS	Halls Middle & Elem	1L400HID	2733	100%	6	458	N6L4T8-HP-LNS-OS	1913	75%	6	222	$274.11	$1,644.68	1.75	4,
COMMONS	Halls Middle & Elem	1L400HID	2733	100%	6	458	N6L4T8-SP-LNS-OS-PCDIM	1913	38%	6	192	$299.32	$1,795.90	2.32	5,
COMMONS	Halls Middle & Elem	1L1000HID	2733	100%	6	1080	N8L4T8-HP-LNS-OS-PC	1913	38%	6	296	$387.07	$2,322.39	5.81	14,
COMMONS	Halls Middle & Elem	NOTHING	2733	100%	1	0	PHOTOCELL	2733	100%	1	0	$95.25	$95.25	0.00	
COMMONS	Halls Middle & Elem	2L4T8-SP	2733	100%	15	58	2L4T8-LP-OS-HIGH	2914	75%	15	48	$38.84	$582.53	0.33	2
COMMONS	EM/Night	2L4T8-SP-EM	8766	100%	12	58	2L4T8-LP-DUAL-EM-HIGH	8766	100%	12	50	$134.27	$1,611.26	0.10	8
COMMONS	Halls Middle & Elem	3L4T8-SP	2733	100%	3	85	2L4T8-SP-24RFL	2733	100%	3	54	$56.77	$170.31	0.09	2
COMMONS	EM/Night	3L4T8-SP-EM	8766	100%	2	82	2L4T8-SP-24RFL-EM	8766	100%	2	54	$152.21	$304.41	0.06	4
COMMONS	Halls Middle & Elem	NOTHING	2733	100%	2	0	WCDT	4163	100%	2	0	$256.93	$513.87	0.00	
ENTRY VESTIBULE	Halls Middle & Elem	1L70HID	2733	100%	2	90	1L32CF-CONV-PC	1367	50%	2	32	$75.85	$151.70	0.15	4
ENTRY VESTIBULE	Halls Middle & Elem	NOTHING	2733	100%	1	0	PHOTOCELL	2733	100%	1	0	$95.25	$95.25	0.00	
STAGE	Storage	3L4T8-SP	2250	20%	11	85	2L4T8-SP-24RFL	2250	20%	11	54	$56.77	$624.47	0.07	7
RAMP / CORRIDOR	Halls Middle & Elem	3L4T8-SP	4163	100%	2	85	2L4T8-SP-24RFL	4163	100%	2	54	$56.77	$113.54	0.06	2
RAMP / CORRIDOR	EM/Night	3L4T8-SP-DUAL-EM	8766	100%	1	82	2L4T8-SP-24RFL-DUAL-EM	8766	100%	1	56	$152.53	$152.53	0.03	2
CHOIR	Class	3L4T8-SP-OS	2365	100%	13	82	2L4T8-SP-24RFL-OS	1656	75%	13	54	$56.77	$738.01	0.54	1,
CHOIR STORAGE	Storage	3L4T8-SP	2250	20%	2	85	2L4T8-SP-24RFL	2250	20%	2	54	$56.77	$113.54	0.01	1
GIRLS RESTROOM	Halls Middle & Elem	1L32CF	4163	100%	1	32	NO RETRO	4163	100%	1	32	$0.00	$0.00	0.00	
GIRLS RESTROOM	Halls Middle & Elem	2L4T8-SP	4163	100%	8	58	2L4T8-LP	4163	100%	8	48	$32.46	$259.71	0.08	3
GIRLS RESTROOM	EM/Night	2L4T8-SP-EM	8766	100%	1	58	2L4T8-LP-DUAL-EM	8766	100%	1	50	$127.90	$127.90	0.01	7
BOYS RESTROOM	Halls Middle & Elem	1L32CF	4163	100%	1	32	NO RETRO	4163	100%	1	32	$0.00	$0.00	0.00	
BOYS RESTROOM	Halls Middle & Elem	2L4T8-SP	4163	100%	8	58	2L4T8-LP	4163	100%	8	48	$32.46	$259.71	0.08	3
BOYS RESTROOM	EM/Night	2L4T8-SP-EM	8766	100%	1	58	2L4T8-LP-DUAL-EM	8766	100%	1	50	$127.90	$127.90	0.01	7
CUSTODIAL	Custodial	2L4T8-SP	2250	30%	1	58	NO RETRO	2250	30%	1	58	$0.00	$0.00	0.00	
CUSTODIAL	Custodial	NOTHING	2250	30%	1	0	WSIR	2250	30%	1	0	$79.32	$79.32	0.00	
GYMNASIUM	Gym	1L400HID	2733	100%	30	458	N6LT8-HP-LNS-WG-OS	1913	75%	30	222	$438.15	$13,144.38	8.75	24,
GYMNASIUM	Gym	NOTHING	2733	100%	4	0	WCIR	2733	100%	4	0	$316.78	$1,267.12	0.00	
GYMNASIUM	EM/Night	LED EXIT	8766	100%	5	3	NO RETRO	8766	100%	5	3	$0.00	$0.00	0.00	
GYM S ENTRY VEST	Halls Middle & Elem	3L4T8-SP	2733	100%	3	85	2L4T8-SP-24RFL-PC	1367	50%	3	54	$56.77	$170.31	0.17	4
GYM S ENTRY VEST	Halls Middle & Elem	NOTHING	2733	100%	1	0	PHOTOCELL	2733	100%	1	0	$95.25	$95.25	0.00	
GYM EQUIPMENT 1	Supply	3L4T8-SP	2733	40%	2	85	2L4T8-SP-24RFL-OS	1913	30%	2	54	$56.77	$113.54	0.04	2
GYM EQUIPMENT 1	Supply	NOTHING	2733	40%	1	0	WSIR	2723	40%	1	0	$79.32	$79.32	0.00	
GYM EQUIPMENT 2	Supply	3L4T8-SP	2733	40%	6	85	2L4T8-SP-24RFL-OS	1913	30%	6	54	$56.77	$340.62	0.11	7
GYM EQUIPMENT 2	Supply	NOTHING	2733	40%	1	0	WSIR	2733	40%	1	0	$79.32	$79.32	0.00	
GYM N ENTRY VEST	Halls Middle & Elem	1L32CF	2733	100%	3	32	NO RETRO	2733	100%	3	32	$0.00	$0.00	0.00	
BOYS LOCKER ROOM	Class	3L4T8-SP	2880	100%	10	85	2L4T8-SP-24RFL	2880	100%	10	54	$56.77	$567.70	0.31	8
BOYS LOCKER ROOM	Class	2L4T8-SP	2880	100%	3	58	NO RETRO	2880	100%	3	58	$0.00	$0.00	0.00	
BOYS LOCKER ROOM	EM/Night	LED EXIT	8766	100%	1	3	NO RETRO	8766	100%	1	3	$0.00	$0.00	0.00	
BOYS COACH	Offices, Private	3L4T8-SP	2880	50%	2	85	2L4T8-SP-24RFL	2880	50%	2	54	$56.77	$113.54	0.03	1
BOYS COACH LOCKER	Offices, Private	3L4T8-SP	2880	50%	1	85	2L4T8-SP-24RFL	2880	50%	1	54	$56.77	$56.77	0.02	8
GIRLS LOCKER ROOM	Class	3L4T8-SP	2880	100%	7	85	2L4T8-SP-24RFL	2880	100%	7	54	$56.77	$397.39	0.22	6
GIRLS LOCKER ROOM	Class	2L4T8-SP	2880	100%	3	58	NO RETRO	2880	100%	3	58	$0.00	$0.00	0.00	
GIRLS LOCKER ROOM	EM/Night	LED EXIT	8766	100%	1	3	NO RETRO	8766	100%	1	3	$0.00	$0.00	0.00	
GIRLS COACH	Offices, Private	3L4T8-SP	2880	50%	2	85	2L4T8-SP-24RFL	2880	50%	2	54	$56.77	$113.54	0.03	1
GIRLS COACH LOCKER	Offices, Private	3L4T8-SP	2880	50%	1	85	2L4T8-SP-24RFL	2880	50%	1	54	$56.77	$56.77	0.02	8
STAIR/EXIT CORR	Halls Middle & Elem	3L4T8-SP	4163	100%	3	85	2L4T8-SP-24RFL	4163	100%	3	54	$56.77	$170.31	0.09	3
STAIR/EXIT CORR	EM/Night	3L4T8-SP-DUAL-EM	8766	100%	3	82	2L4T8-SP-24RFL-DUAL-EM	8766	100%	3	56	$152.53	$457.58	0.08	6
CHOIR CORR	Halls Middle & Elem	3L4T8-SP	4163	100%	4	85	2L4T8-SP-24RFL	4163	100%	4	54	$56.77	$227.08	0.12	5
CHOIR CORR	EM/Night	3L4T8-SP-DUAL-EM	8766	100%	2	82	2L4T8-SP-24RFL-DUAL-EM	8766	100%	2	56	$152.53	$305.05	0.05	4
CHOIR CORR	EM/Night	LED EXIT	8766	100%	1	3	NO RETRO	8766	100%	1	3	$0.00	$0.00	0.00	
KITCHEN	EM/Night	3L4T8-SP-EM	8766	100%	4	82	2L4T8-SP-24RFL-DUAL-EM	8766	100%	4	56	$152.21	$608.83	0.10	9
KITCHEN	Kitchen	3L4T8-SP	1000	100%	9	85	2L4T8-SP-24RFL	1000	100%	9	54	$56.77	$510.93	0.28	2
KITCHEN	EM/Night	LED EXIT	8766	100%	2	3	NO RETRO	8766	100%	2	3	$0.00	$0.00	0.00	
KITCHEN OFFICE	Offices, Private	3L4T8-SP	2250	50%	1	85	2L4T8-SP-24RFL-OS	1575	38%	1	54	$56.77	$56.77	0.02	1
KITCHEN OFFICE	Offices, Private	NOTHING	2250	50%	1	0	WSIR	2250	50%	1	0	$79.32	$79.32	0.00	
RR	Private RR	3L4T8-SP	2250	10%	1	85	2L4T8-SP-24RFL-OS	1575	8%	1	54	$56.77	$56.77	0.00	1
RR	Private RR	NOTHING	2250	10%	1	0	WSIR	2250	10%	1	0	$79.32	$79.32	0.00	
DRY GOODS	Kitchen	3L4T8-SP	1000	100%	2	85	2L4T8-SP-24RFL-OS	700	75%	2	54	$56.77	$113.54	0.09	9
DRY GOODS	Kitchen	NOTHING	1000	100%	1	0	WSIR	1000	100%	1	0	$79.32	$79.32	0.00	
MECH	Mechanical	2L4T8-SP	2250	10%	9	58	NO RETRO	2250	10%	9	58	$0.00	$0.00	0.00	
SCHOOL STORE	Storage	3L4T8-SP	2250	20%	4	85	2L4T8-SP-24RFL-OS	1575	15%	4	54	$56.77	$227.08	0.04	4
SCHOOL STORE	Storage	NOTHING	2250	20%	1	0	WSIR	2250	20%	1	0	$79.32	$79.32	0.00	
MUSIC ROOM	Class	3L4T8-SP-OS	2365	100%	20	82	2L4T8-SP-24RFL-OS	1656	75%	20	54	$56.77	$1,135.40	0.83	2,
MUSIC ROOM	Class	3L4T8-SP-OS	2365	100%	5	82	2L4T8-SP-24RFL-OS	1656	75%	5	54	$56.77	$283.85	0.21	5
MUSIC ROOM	EM/Night	LED EXIT	8766	100%	2	3	NO RETRO	8766	100%	2	3	$0.00	$0.00	0.00	
MUSIC OFFICE	Offices, Private	3L4T8-SP	2250	50%	2	85	2L4T8-SP-24RFL-OS	1575	38%	2	54	$56.77	$113.54	0.04	2
MUSIC OFFICE	Offices, Private	NOTHING	2250	50%	1	0	WSIR	2250	50%	1	0	$79.32	$79.32	0.00	
INSTRUMENTS	Class	3L4T8-SP	2365	100%	8	85	2L4T8-SP-24RFL-OS	1656	75%	8	54	$56.77	$454.16	0.36	8
INSTRUMENTS	Class	NOTHING	2365	100%	1	0	WCIR	2365	100%	1	0	$256.93	$256.93	0.00	
MUSIC STORAGE	Storage	3L4T8-SP	2250	20%	2	85	2L4T8-SP-24RFL-OS	1575	15%	2	54	$56.77	$113.54	0.02	2
MUSIC STORAGE	Storage	NOTHING	2250	20%	1	0	WSIR	2250	20%	1	0	$79.32	$79.32	0.00	
ELECTRIC ROOM	Mechanical	3L4T8-SP	2250	10%	1	85	2L4T8-SP-24RFL	2250	10%	1	54	$56.77	$56.77	0.00	7
MUSIC CORR	Halls Middle & Elem	3L4T8-SP	4163	100%	4	85	2L4T8-SP-24RFL	4163	100%	4	54	$56.77	$227.08	0.12	5
MUSIC CORR	EM/Night	3L4T8-SP-DUAL-EM	8766	100%	2	82	2L4T8-SP-24RFL-DUAL-EM	8766	100%	2	56	$152.53	$305.05	0.05	4
MUSIC CORR	EM/Night	LED EXIT	8766	100%	1	3	NO RETRO	8766	100%	1	3	$0.00	$0.00	0.00	
MAIN OFFICE	Common Admin	3L4T8-SP	2250	100%	15	85	2L4T8-SP-24RFL	2250	100%	15	54	$56.77	$851.55	0.47	1,
MAIN OFFICE	EM/Night	3L4T8-SP-DUAL-EM	8766	100%	3	82	2L4T8-SP-24RFL-DUAL-EM	8766	100%	3	56	$152.53	$457.58	0.08	6
MAIN OFFICE	EM/Night	LED EXIT	8766	100%	1	3	NO RETRO	8766	100%	1	3	$0.00	$0.00	0.00	
MAIN OFFICE	Common Admin	1L32CF	2250	100%	10	32	NO RETRO	2250	100%	10	32	$0.00	$0.00	0.00	
CLINIC	Common Admin	3L4T8-SP	2250	100%	6	85	NO RETRO	2250	100%	6	85	$0.00	$0.00	0.00	
CLINIC	Common Admin	2L4T8-SP	2250	100%	1	58	NO RETRO	2250	100%	1	58	$0.00	$0.00	0.00	
CUSTODIAL OFFICE	Offices, Private	3L4T8-SP	2250	50%	3	85	2L4T8-SP-24RFL-OS	1575	38%	3	54	$56.77	$170.31	0.07	3
CUSTODIAL OFFICE	Offices, Private	NOTHING	2250	50%	1	0	WSIR	2250	50%	1	0	$79.32	$79.32	0.00	
PRINCIPAL OFFICE	Offices, Private	3L4T8-SP	2250	50%	6	85	2L4T8-SP-24RFL-OS	1575	38%	6	54	$56.77	$340.62	0.13	6
PRINCIPAL OFFICE	Offices, Private	NOTHING	2250	50%	1	0	WCDT	2250	50%	1	0	$256.93	$256.93	0.00	
ELECTRIC ROOM	Mechanical	3L4T8-SP	2250	10%	4	85	2L4T8-SP-24RFL	1575	10%	4	54	$56.77	$227.08	0.01	4
WORK ROOM	Offices, Private	3L4T8-SP	2250	50%	6	85	2L4T8-SP-24RFL	2250	50%	6	54	$56.77	$340.62	0.09	4

STAFF LOUNGE	Offices, Private	3L4T8-SP	2250	50%	8	85	2L4T8-SP-24RFL-OS	1575	38%	8	54	$56.77	$454.16	0.18	8
STAFF LOUNGE	Offices, Private	NOTHING	2250	50%	1	0	WCDT	2250	50%	1	0	$256.93	$256.93	0.00	
RRS	Private RR	2L4T8-SP	2250	10%	2	58	2L4T8-SP-NR-OS	1575	8%	2	58	$0.00	$0.00	0.00	7
RRS	Private RR	NOTHING	2250	10%	2	0	WSIR	2250	10%	2	0	$79.32	$158.65	0.00	
DETENTION	Offices, Private	3L4T8-SP	2250	50%	4	85	2L4T8-SP-24RFL-OS	1575	38%	4	54	$56.77	$227.08	0.09	4
DETENTION	Offices, Private	NOTHING	2250	50%	1	0	WCDT	2250	50%	1	0	$256.93	$256.93	0.00	
RECORDS	Offices, Private	3L4T8-SP	2250	50%	4	85	2L4T8-SP-24RFL-OS	1575	38%	4	54	$56.77	$227.08	0.09	4
RECORDS	Offices, Private	NOTHING	2250	50%	1	0	WSIR	2250	50%	1	0	$79.32	$79.32	0.00	
CONFERENCE ROOM	Conference	3L4T8-SP	2250	40%	6	85	2L4T8-SP-24RFL-OS	1575	30%	6	54	$56.77	$340.62	0.11	6
CONFERENCE ROOM	Conference	NOTHING	2250	40%	1	0	CIR	2250	40%	1	0	$256.93	$256.93	0.00	
COUNSELING	Offices, Private	3L4T8-SP	2250	50%	9	85	2L4T8-SP-24RFL	2250	50%	9	54	$56.77	$510.93	0.14	6
COUNSELING	EM/Night	3L4T8-SP-DUAL-EM	8766	100%	7	82	2L4T8-SP-24RFL-DUAL-EM	8766	100%	7	56	$152.53	$1,067.68	0.18	1,:
COUNSELING	EM/Night	LED EXIT	8766	100%	2	3	NO RETRO	8766	100%	2	3	$0.00	$0.00	0.00	
COUNSELING CONF	Conference	3L4T8-SP	2250	40%	4	85	2L4T8-SP-24RFL-OS	1575	30%	4	54	$56.77	$227.08	0.07	4
COUNSELING CONF	Conference	NOTHING	2250	40%	1	0	WSDT	2250	40%	1	0	$114.31	$114.31	0.00	
COUNSELING RECORDS	Supply	2L4T8-SP	2250	40%	2	58	2L4T8-SP-NR-OS	1575	30%	2	58	$0.00	$0.00	0.01	7
COUNSELING RECORDS	Supply	NOTHING	2250	40%	1	0	WSIR	2250	40%	1	0	$79.32	$79.32	0.00	
COUNSELING OFFICE 1	Offices, Private	3L4T8-SP	2250	50%	6	85	2L4T8-SP-24RFL-OS	1575	38%	6	54	$56.77	$340.62	0.13	6
COUNSELING OFFICE 1	Offices, Private	NOTHING	2250	50%	1	0	WSDT	2250	50%	1	0	$114.31	$114.31	0.00	
COUNSELING OFFICE 2	Offices, Private	3L4T8-SP	2250	50%	6	85	2L4T8-SP-24RFL-OS	1575	38%	6	54	$56.77	$340.62	0.13	6
COUNSELING OFFICE 2	Offices, Private	NOTHING	2250	50%	1	0	WSDT	2250	50%	1	0	$114.31	$114.31	0.00	
ELEVATOR ROOM	Mechanical	2L4T8-SP	2250	10%	1	58	NO RETRO	2250	10%	1	58	$0.00	$0.00	0.00	
CLASS 113	Class	3L4T8-SP	2365	100%	19	85	2L4T8-SP-24RFL	2365	100%	19	54	$56.77	$1,078.63	0.59	1,:
STOR 113	Storage	3L4T8-SP	2250	20%	2	85	2L4T8-SP-24RFL-OS	1575	15%	2	54	$56.77	$113.54	0.02	2
STOR 113	Storage	NOTHING	2250	20%	1	0	WSIR	2250	20%	1	0	$79.32	$79.32	0.00	
TECH LAB 112	Class	3L4T8-SP-OS	2365	100%	21	82	2L4T8-SP-24RFL-OS	1656	75%	21	54	$56.77	$1,192.17	0.87	2,:
TECH OFFICE	Class	3L4T8-SP	2365	100%	3	85	2L4T8-SP-24RFL-OS	1656	75%	3	54	$56.77	$170.31	0.13	3
TECH OFFICE	Offices, Private	NOTHING	2250	50%	1	0	WSDT	2250	50%	1	0	$114.31	$114.31	0.00	
ART CLASS 111	Class	3L4T8-SP-OS	2365	100%	16	82	NO RETRO	1656	100%	16	82	$0.00	$0.00	0.00	9
ART STORAGE	Storage	3L4T8-SP	2250	20%	3	85	2L4T8-SP-24RFL-OS	1575	15%	3	54	$56.77	$170.31	0.03	3
ART STORAGE	Storage	NOTHING	2250	20%	1	0	WSIR	2250	20%	1	0	$79.32	$79.32	0.00	
ELECTRIC ROOM	Mechanical	2L4T8-SP	2250	10%	1	58	NO RETRO	2250	10%	1	58	$0.00	$0.00	0.00	
PROJECT ROOM	Storage	3L4T8-SP-DUAL	2250	20%	4	90	NO RETRO	2250	20%	4	90	$0.00	$0.00	0.00	
ART OFFICE	Offices, Private	3L4T8-SP	2250	50%	2	85	2L4T8-SP-24RFL-OS	1575	38%	2	54	$56.77	$113.54	0.04	2
ART OFFICE	Offices, Private	NOTHING	2250	50%	1	0	WSIR	2250	50%	1	0	$79.32	$79.32	0.00	
ART WORK ROOM	Class	3L4T8-SP	2365	100%	2	85	2L4T8-SP-24RFL-OS	1656	75%	2	54	$56.77	$113.54	0.09	2
ART WORK ROOM	Class	NOTHING	2365	100%	1	0	WSIR	2365	100%	1	0	$79.32	$79.32	0.00	
TECH LAB 130	Class	3L4T8-SP-OS	2365	100%	15	82	2L4T8-SP-24RFL-OS	1656	75%	15	54	$56.77	$851.55	0.62	1,:
TECH LAB 130	Class	2L4T8-SP-OS	2365	100%	2	58	NO RETRO	2365	100%	2	58	$0.00	$0.00	0.00	
TECH OFFICE	Offices, Private	3L4T8-SP	2250	50%	3	85	2L4T8-SP-24RFL-OS	1575	38%	3	54	$56.77	$170.31	0.07	3
TECH OFFICE	Offices, Private	NOTHING	2250	50%	1	0	WSIR	2250	50%	1	0	$79.32	$79.32	0.00	
ELECTRIC ROOM	Mechanical	3L4T8-SP	2250	10%	1	85	2L4T8-SP-24RFL	2250	10%	1	54	$56.77	$56.77	0.00	7
CUSTODIAL	Custodial	2L4T8-SP	2250	30%	1	58	2L4T8-SP-NR-OS	1125	23%	1	58	$0.00	$0.00	0.00	6
CUSTODIAL	Custodial	NOTHING	2250	30%	1	0	WSIR	2250	30%	1	0	$79.32	$79.32	0.00	
STAFF RR	Private RR	2L4T8-SP	2250	10%	1	58	2L4T8-SP-NR-OS	1575	8%	1	58	$0.00	$0.00	0.00	3
STAFF RR	Private RR	NOTHING	2250	10%	1	0	WSIR	2250	10%	1	0	$79.32	$79.32	0.00	
CLASS 131	Class	3L4T8-SP-OS	2365	100%	12	82	2L4T8-SP-24RFL-OS	1656	75%	12	54	$56.77	$681.24	0.50	1,:
CLASS 132	Class	3L4T8-SP-OS	2365	100%	12	82	2L4T8-SP-24RFL-OS	1656	75%	12	54	$56.77	$681.24	0.50	1,:
CLASS 132	Class	3L4T8-SP-OS	2365	100%	1	82	2L4T8-SP-24RFL-OS	1656	75%	1	54	$56.77	$56.77	0.04	1
CLASS 132	EM/Night	LED EXIT	8766	100%	1	3	NO RETRO	8766	100%	1	3	$0.00	$0.00	0.00	
SCIENCE STORAGE	Storage	3L4T8-SP	2250	20%	2	85	2L4T8-SP-24RFL-OS	1575	15%	2	54	$56.77	$113.54	0.02	2
SCIENCE STORAGE	Storage	NOTHING	2250	20%	1	0	WSIR	2250	20%	1	0	$79.32	$79.32	0.00	
SCIENCE OFFICE	Offices, Private	3L4T8-SP	2250	50%	2	85	2L4T8-SP-24RFL-OS	1575	38%	2	54	$56.77	$113.54	0.04	2
SCIENCE OFFICE	Offices, Private	NOTHING	2250	50%	1	0	WSIR	2250	50%	1	0	$79.32	$79.32	0.00	
CLASS 133	Class	3L4T8-SP-OS	2365	100%	11	82	2L4T8-SP-24RFL-OS	1656	75%	11	54	$56.77	$624.47	0.46	1,
CLASS 134	Class	3L4T8-SP-OS	2365	100%	11	82	2L4T8-SP-24RFL-OS	1656	75%	11	54	$56.77	$624.47	0.46	1,
CLASS 135	Class	3L4T8-SP-OS	2365	100%	12	82	2L4T8-SP-24RFL-OS	1656	75%	12	54	$56.77	$681.24	0.50	1,:
CLASS 137	Class	3L4T8-SP-OS	2365	100%	12	82	2L4T8-SP-24RFL-OS	1656	75%	12	54	$56.77	$681.24	0.50	1,:
TECH LAB 136	Class	3L4T8-SP	2365	100%	6	85	2L4T8-SP-24RFL-OS	1656	75%	6	54	$56.77	$340.62	0.27	6
TECH LAB 136	Class	NOTHING	2365	100%	1	0	WCDT	2365	100%	1	0	$256.93	$256.93	0.00	
TEAM WORK ROOM	Offices, Private	3L4T8-SP	2250	50%	4	85	2L4T8-SP-24RFL-OS	1575	38%	4	54	$56.77	$227.08	0.09	4
TEAM WORK ROOM	Offices, Private	NOTHING	2250	50%	1	0	WSIR	2250	50%	1	0	$79.32	$79.32	0.00	
CLASS 138	Class	3L4T8-SP-OS	2365	100%	10	82	2L4T8-SP-24RFL-OS	1656	75%	10	54	$56.77	$567.70	0.42	1,(
GIRLS RESTROOM	Halls Middle & Elem	1L32CF	4163	100%	1	32	NO RETRO	4163	100%	1	32	$0.00	$0.00	0.00	
GIRLS RESTROOM	Halls Middle & Elem	2L4T8-SP	4163	100%	8	58	2L4T8-LP	4163	100%	8	48	$32.46	$259.71	0.08	3
GIRLS RESTROOM	EM/Night	2L4T8-SP-EM	8766	100%	1	58	2L4T8-LP-DUAL-EM	8766	100%	1	50	$127.90	$127.90	0.01	7
BOYS RESTROOM	Halls Middle & Elem	1L32CF	4163	100%	1	32	NO RETRO	4163	100%	1	32	$0.00	$0.00	0.00	
BOYS RESTROOM	Halls Middle & Elem	2L4T8-SP	4163	100%	8	58	2L4T8-LP	4163	100%	8	48	$32.46	$259.71	0.08	3
BOYS RESTROOM	EM/Night	2L4T8-SP-EM	8766	100%	1	58	2L4T8-LP-DUAL-EM	8766	100%	1	50	$127.90	$127.90	0.01	7
SUPPLY ROOM	Supply	3L4T8-SP	2250	40%	1	85	2L4T8-SP-24RFL-OS	1575	30%	1	54	$56.77	$56.77	0.02	1
SUPPLY ROOM	Supply	NOTHING	2250	40%	1	0	WSIR	2250	40%	1	0	$79.32	$79.32	0.00	
DATA ROOM	Mechanical	3L4T8-SP	2250	10%	1	85	2L4T8-SP-24RFL-OS	1575	8%	1	54	$56.77	$56.77	0.00	1
DATA ROOM	Mechanical	NOTHING	2250	10%	1	0	WSIR	2250	10%	1	0	$79.32	$79.32	0.00	
SUPPLY ROOM	Supply	3L4T8-SP	2250	40%	1	85	2L4T8-SP-24RFL-OS	1575	30%	1	54	$56.77	$56.77	0.02	1
SUPPLY ROOM	Supply	NOTHING	2250	40%	1	0	WSIR	2250	40%	1	0	$79.32	$79.32	0.00	
CLASS 128	Class	3L4T8-SP-OS	2365	100%	10	82	2L4T8-SP-24RFL-OS	1656	75%	10	54	$56.77	$567.70	0.42	1,(
CLASS 127	Class	3L4T8-SP-OS	2365	100%	12	82	2L4T8-SP-24RFL-OS	1656	75%	12	54	$56.77	$681.24	0.50	1,:
CLASS 125	Class	3L4T8-SP-OS	2365	100%	12	82	2L4T8-SP-24RFL-OS	1656	75%	12	54	$56.77	$681.24	0.50	1,:
CLASS 125	Class	3L4T8-SP-OS	2365	100%	1	82	2L4T8-SP-24RFL-OS	1656	75%	1	54	$56.77	$56.77	0.04	1
CLASS 125	EM/Night	LED EXIT	8766	100%	1	3	NO RETRO	8766	100%	1	3	$0.00	$0.00	0.00	
SCIENCE STORAGE	Storage	3L4T8-SP	2250	20%	2	85	2L4T8-SP-24RFL-OS	1575	15%	2	54	$56.77	$113.54	0.02	2
SCIENCE STORAGE	Storage	NOTHING	2250	20%	1	0	WSIR	2250	20%	1	0	$79.32	$79.32	0.00	
SCIENCE OFFICE	Offices, Private	3L4T8-SP	2250	50%	2	85	2L4T8-SP-24RFL-OS	1575	38%	2	54	$56.77	$113.54	0.04	2
SCIENCE OFFICE	Offices, Private	NOTHING	2250	50%	1	0	WSIR	2250	50%	1	0	$79.32	$79.32	0.00	
CLASS 124	Class	3L4T8-SP-OS	2365	100%	11	82	2L4T8-SP-24RFL-OS	1656	75%	11	54	$56.77	$624.47	0.46	1,
CLASS 123	Class	3L4T8-SP-OS	2365	100%	11	82	2L4T8-SP-24RFL-OS	1656	75%	11	54	$56.77	$624.47	0.46	1,
CLASS 122	Class	3L4T8-SP-OS	2365	100%	12	82	2L4T8-SP-24RFL-OS	1656	75%	12	54	$56.77	$681.24	0.50	1,:
CLASS 121	Class	3L4T8-SP-OS	2365	100%	12	82	2L4T8-SP-24RFL-OS	1656	75%	12	54	$56.77	$681.24	0.50	1,:
STORAGE	Storage	3L4T8-SP	2250	20%	2	85	2L4T8-SP-24RFL-OS	1575	15%	2	54	$56.77	$113.54	0.02	2
STORAGE	Storage	NOTHING	2250	20%	1	0	WSIR	2250	20%	1	0	$79.32	$79.32	0.00	
TESTING	Offices, Private	3L4T8-SP	2250	50%	2	85	2L4T8-SP-24RFL-OS	1575	38%	2	54	$56.77	$113.54	0.04	2
TESTING	Offices, Private	NOTHING	2250	50%	1	0	WSIR	2250	50%	1	0	$79.32	$79.32	0.00	
OFFICE	Offices, Private	3L4T8-SP	2250	50%	2	85	2L4T8-SP-24RFL-OS	1575	38%	2	54	$56.77	$113.54	0.04	2
OFFICE	Offices, Private	NOTHING	2250	50%	1	0	WSIR	2250	50%	1	0	$79.32	$79.32	0.00	
TECH LAB	Class	3L4T8-SP	2365	100%	6	85	2L4T8-SP-24RFL-OS	1656	75%	6	54	$56.77	$340.62	0.27	6
TECH LAB	Class	NOTHING	2365	100%	1	0	WCDT	2365	100%	1	0	$256.93	$256.93	0.00	
TEAM WORK ROOM	Offices, Private	3L4T8-SP	2250	50%	4	85	2L4T8-SP-24RFL-OS	1575	38%	4	54	$56.77	$227.08	0.09	4
TEAM WORK ROOM	Offices, Private	NOTHING	2250	50%	1	0	WSIR	2250	50%	1	0	$79.32	$79.32	0.00	
GIRLS RESTROOM	Halls Middle & Elem	1L32CF	4163	100%	1	32	NO RETRO	4163	100%	1	32	$0.00	$0.00	0.00	
GIRLS RESTROOM	Halls Middle & Elem	2L4T8-SP	4163	100%	8	58	2L4T8-LP	4163	100%	8	48	$32.46	$259.71	0.08	3

GIRLS RESTROOM	EM/Night	2L4T8-SP-EM	8766	100%	1	58	2L4T8-LP-DUAL-EM	8766	100%	1	50	$127.90	$127.90	0.01	7
BOYS RESTROOM	Halls Middle & Elem	1L32CF	4163	100%	1	32	NO RETRO	4163	100%	1	32	$0.00	$0.00	0.00	
BOYS RESTROOM	Halls Middle & Elem	2L4T8-SP	4163	100%	8	58	2L4T8-LP	4163	100%	8	48	$32.46	$259.71	0.08	3
BOYS RESTROOM	EM/Night	2L4T8-SP-EM	8766	100%	1	58	2L4T8-LP-DUAL-EM	8766	100%	1	50	$127.90	$127.90	0.01	7
SUPPLY ROOM	Supply	3L4T8-SP	2250	40%	1	85	2L4T8-SP-24RFL-OS	1575	30%	1	54	$56.77	$56.77	0.02	1
SUPPLY ROOM	Supply	NOTHING	2250	40%	1	0	WSIR	2250	40%	1	0	$79.32	$79.32	0.00	
SUPPLY ROOM	Supply	3L4T8-SP	2250	40%	1	85	2L4T8-SP-24RFL-OS	1575	30%	1	54	$56.77	$56.77	0.02	1
SUPPLY ROOM	Supply	NOTHING	2250	40%	1	0	WSIR	2250	40%	1	0	$79.32	$79.32	0.00	
CUSTODIAL	Custodial	2L4T8-SP	2250	30%	1	58	2L4T8-SP-NR-OS	1575	23%	1	58	$0.00	$0.00	0.00	3
CUSTODIAL	Custodial	NOTHING	2250	30%	1	0	WSIR	2250	30%	1	0	$79.32	$79.32	0.00	
STAFF RR	Private RR	2L4T8-SP	2250	10%	1	58	2L4T8-SP-NR-OS	1575	8%	1	58	$0.00	$0.00	0.00	3
STAFF RR	Private RR	NOTHING	2250	10%	1	0	WSIR	2250	10%	1	0	$79.32	$79.32	0.00	
MEDIA CENTER	Library	3L4T8-SP	2365	90%	26	85	2L4T8-SP-24RFL-HIGH	2365	90%	26	54	$63.14	$1,641.69	0.73	1,1
MEDIA CENTER	Library	3L4T8-SP	2365	90%	6	85	2L4T8-SP-24RFL	2365	90%	6	54	$56.77	$340.62	0.17	4
MEDIA CENTER	Library	3L4T8-SP	2365	90%	5	85	2L4T8-SP-24RFL-PCDIM	1183	45%	5	58	$106.80	$534.00	0.25	6
MEDIA CLASS AREA	Library	3L4T8-SP	2365	90%	10	85	2L4T8-SP-24RFL-OS	1656	68%	10	54	$56.77	$567.70	0.40	1,
MEDIA CLASS AREA	Library	NOTHING	2365	90%	1	0	WCDT	2365	90%	1	0	$256.93	$256.93	0.00	
MEDIA OFFICE	Offices, Private	3L4T8-SP	2250	50%	2	85	2L4T8-SP-24RFL-OS	1575	38%	2	54	$56.77	$113.54	0.04	2
MEDIA OFFICE	Offices, Private	NOTHING	2250	50%	1	0	WSDT	2250	50%	1	0	$114.31	$114.31	0.00	
MEDIA WORK AREA	Offices, Private	3L4T8-SP	2250	50%	10	85	2L4T8-SP-24RFL-OS	1575	38%	10	54	$56.77	$567.70	0.22	1,1
MEDIA WORK AREA	Offices, Private	NOTHING	2250	50%	1	0	WCDT	2250	50%	1	0	$256.93	$256.93	0.00	
MEDIA WORK A/V STOR	Storage	3L4T8-SP	2250	20%	2	85	2L4T8-SP-24RFL	2250	20%	2	54	$56.77	$113.54	0.01	1
MECH ROOM	Mechanical	2L4T8-SP	2250	10%	10	58	NO RETRO	2250	10%	10	58	$0.00	$0.00	0.00	
MECH ROOM	EM/Night	LED EXIT	8766	100%	3	3	NO RETRO	8766	100%	3	3	$0.00	$0.00	0.00	
COMPUTER LAB	Class	3L4T8-SP-OS	2365	100%	12	82	2L4T8-SP-24RFL-OS	1656	75%	12	54	$56.77	$681.24	0.50	1,1
CLASS 211	Class	3L4T8-SP-OS	2365	100%	12	82	2L4T8-SP-24RFL-OS	1656	75%	12	54	$56.77	$681.24	0.50	1,1
CLASS 211	EM/Night	LED EXIT	8766	100%	1	3	NO RETRO	8766	100%	1	3	$0.00	$0.00	0.00	
WORK ROOM	Offices, Private	3L4T8-SP	2250	50%	4	85	2L4T8-SP-24RFL-OS	1575	38%	4	54	$56.77	$227.08	0.09	4
WORK ROOM	Offices, Private	NOTHING	2250	50%	1	0	WSDT	2250	50%	1	0	$114.31	$114.31	0.00	
CORRIDOR	Halls Middle & Elem	3L4T8-SP	4163	100%	2	85	2L4T8-SP-24RFL	4163	100%	2	54	$56.77	$113.54	0.06	2
CLASS 212	Class	3L4T8-SP-OS	2365	100%	6	82	2L4T8-SP-24RFL-OS	1656	75%	6	54	$56.77	$340.62	0.25	6
CLASS 212	Class	NOTHING	2365	100%	1	0	WCDT	2365	100%	1	0	$256.93	$256.93	0.00	
CLASS 213	Class	3L4T8-SP-OS	2365	100%	10	82	2L4T8-SP-24RFL-OS	1656	75%	10	54	$56.77	$567.70	0.42	1,1
CLASS 213	Class	3L2T8-SP-OS	2365	100%	3	45	NO RETRO	2365	100%	3	45	$0.00	$0.00	0.00	
ELECTRIC ROOM	Mechanical	3L4T8-SP	2250	10%	2	85	2L4T8-SP-24RFL	2250	10%	2	54	$56.77	$113.54	0.01	1
CLASS 214	Class	3L4T8-SP-OS	2365	100%	9	82	2L4T8-SP-24RFL-OS	1656	75%	9	54	$56.77	$510.93	0.37	9
CLASS 214	Class	3L2T8-SP-OS	2365	100%	2	45	NO RETRO	2365	100%	2	45	$0.00	$0.00	0.00	
CLASS 215	Class	3L4T8-SP-OS	2365	100%	9	82	2L4T8-SP-24RFL-OS	1656	75%	9	54	$56.77	$510.93	0.37	9
CLASS 215	Class	3L2T8-SP-OS	2365	100%	2	45	NO RETRO	2365	100%	2	45	$0.00	$0.00	0.00	
CLASS 216	Class	3L4T8-SP-OS	2365	100%	9	82	2L4T8-SP-24RFL-OS	1656	75%	9	54	$56.77	$510.93	0.37	9
CLASS 216	Class	3L2T8-SP-OS	2365	100%	2	45	NO RETRO	2365	100%	2	45	$0.00	$0.00	0.00	
CUSTODIAL / MECH	Custodial	2L4T8-SP	2250	30%	9	58	NO RETRO	2250	30%	9	58	$0.00	$0.00	0.00	
CUSTODIAL / MECH	EM/Night	LED EXIT	8766	100%	1	3	NO RETRO	8766	100%	1	3	$0.00	$0.00	0.00	
GIRLS RESTROOM	Halls Middle & Elem	1L32CF	4163	100%	1	32	NO RETRO	4163	100%	1	32	$0.00	$0.00	0.00	
GIRLS RESTROOM	Halls Middle & Elem	2L4T8-SP	4163	100%	7	58	2L4T8-LP	4163	100%	7	48	$32.46	$227.24	0.07	2
GIRLS RESTROOM	EM/Night	2L4T8-SP-EM	8766	100%	1	58	2L4T8-LP-DUAL-EM	8766	100%	1	50	$127.90	$127.90	0.01	7
BOYS RESTROOM	Halls Middle & Elem	1L32CF	4163	100%	1	32	NO RETRO	4163	100%	1	32	$0.00	$0.00	0.00	
BOYS RESTROOM	Halls Middle & Elem	2L4T8-SP	4163	100%	7	58	2L4T8-LP	4163	100%	7	48	$32.46	$227.24	0.07	2
BOYS RESTROOM	EM/Night	2L4T8-SP-EM	8766	100%	1	58	2L4T8-LP-DUAL-EM	8766	100%	1	50	$127.90	$127.90	0.01	7
STAIR	Halls Middle & Elem	3L4T8-SP	4163	100%	5	85	2L4T8-SP-24RFL	4163	100%	5	54	$56.77	$283.85	0.16	6
STAIR	EM/Night	3L4T8-SP-EM	8766	100%	1	82	2L4T8-SP-24RFL-EM	8766	100%	1	54	$152.21	$152.21	0.03	2
SINKS	Halls Middle & Elem	2L4T8-SP	4163	100%	3	58	2L4T8-LP	4163	100%	3	48	$32.46	$97.39	0.03	1
STAFF RR	Private RR	2L4T8-SP	2250	10%	1	58	2L4T8-SP-NR-OS	1575	8%	1	58	$0.00	$0.00	0.00	3
STAFF RR	Private RR	NOTHING	2250	10%	1	0	WSIR	2250	10%	1	0	$79.32	$79.32	0.00	
TEAM WORK ROOM	Offices, Private	3L4T8-SP	2250	50%	6	85	2L4T8-SP-24RFL-OS	1575	38%	6	54	$56.77	$340.62	0.13	6
TEAM WORK ROOM	Offices, Private	NOTHING	2250	50%	1	0	WSIR	2250	50%	1	0	$79.32	$79.32	0.00	
MAIN STAIR	Halls Middle & Elem	3L4T8-SP	4163	100%	3	85	2L4T8-SP-24RFL-30	4163	100%	3	54	$63.14	$189.43	0.09	3
2ND HALLS	Halls Middle & Elem	3L4T8-SP	4163	100%	3	85	2L4T8-SP-24RFL-24'	4163	100%	3	54	$63.14	$189.43	0.09	3
2ND HALLS	Halls Middle & Elem	3L4T8-SP	4163	100%	29	85	2L4T8-SP-24RFL	4163	100%	29	54	$56.77	$1,646.33	0.90	3,1
2ND HALLS	EM/Night	3L4T8-SP-EM	8766	100%	6	82	2L4T8-SP-24RFL-EM	8766	100%	6	54	$152.21	$913.24	0.17	1,1
2ND HALLS	EM/Night	LED EXIT	8766	100%	6	3	NO RETRO	8766	100%	6	3	$0.00	$0.00	0.00	
2ND DISPLAY CASE	Halls Middle & Elem	1L4T8-SP	4163	100%	3	32	1L4T8-LP	4163	100%	3	25	$30.33	$90.98	0.02	8
1ST HALLS	Halls Middle & Elem	3L4T8-SP	4163	100%	73	85	2L4T8-SP-24RFL	4163	100%	73	54	$56.77	$4,144.21	2.26	9,1
1ST HALLS	EM/Night	3L4T8-SP-EM	8766	100%	18	82	2L4T8-SP-24RFL-EM	8766	100%	18	54	$152.21	$2,739.72	0.50	4,1
1ST HALLS	EM/Night	LED EXIT	8766	100%	12	3	NO RETRO	8766	100%	12	3	$0.00	$0.00	0.00	
1ST DISPLAY CASE	Halls Middle & Elem	1L4T8-SP	4163	100%	6	32	1L4T8-LP	4163	100%	6	25	$30.33	$181.97	0.04	1
TOTALS					**1157**					**1157**			**$82,945.72**	**45.59**	**144**

* Based on ANSI wattages - to be verified by contractor
** Based on manufacturer's wattages - to be verified by contractor

BUILDING: Fraser Valley Elementary
LIGHTING CONTRACTOR: Contractor Name
ELECTRIC CONSUMPTION RATE: $0.05700 per kWh
ELECTRIC DEMAND RATE: $4.35 per kW
HEATING FUEL RATE: $8.290 per MMBtu

ECM 5.1: Lighting system upgrades

		EXISTING					PROPOSED								
AREA	USAGE TYPE	EXISTING FIXTURE DESCRIPTION	ANNUAL HOURS	Demand Div Factor	QTY	WATTS EACH*	RETROFIT DESCRIPTION	ANNUAL HOURS	Demand Div Factor	QTY	WATTS EACH**	UNIT PRICE	TOTAL EXTENDED PRICE	TOTAL KW SAVED	S/ PI
MAIN OFFICE	Offices Admin	4L4T8-LP	2271	90%	4	98	2L4T8-SP-24RFL	2271	90%	4	54	$57.23	$228.91	0.16	
NURSE	Offices Admin	4L4T8-LP	2271	90%	3	98	NO RETRO	2271	90%	3	98	$0.00	$0.00	0.00	
RESTROOM	Private RR	2L100IN	2250	10%	1	200	N2L2T8-SP-2'WL	2250	10%	1	32	$147.88	$147.88	0.02	
PRINCIPAL OFFICE	Offices, Private	4L4T8-LP	2271	50%	4	98	2L4T8-SP-24RFL-OS	1590	38%	4	54	$57.23	$228.91	0.12	
PRINCIPAL OFFICE	Offices, Private	NOTHING	2271	50%	1	0	WSIR	2271	50%	1	0	$79.32	$79.32	0.00	
FILE ROOM	Offices, Private	1L8T8-SP	2271	50%	1	70	1L8T8-SP-NR-OS	1590	38%	1	70	$0.00	$0.00	0.01	
FILE ROOM	Offices, Private	NOTHING	2271	50%	1	0	WSIR	2271	50%	1	0	$79.32	$79.32	0.00	
CONFERENCE ROOM	Conference	4L4T8-LP	2271	40%	4	98	4L4T8-LP-NR-OS	1590	30%	4	98	$0.00	$0.00	0.04	
CONFERENCE ROOM	Conference	NOTHING	2271	40%	1	0	WSIR	2271	40%	1	0	$79.32	$79.32	0.00	
WORK ROOM	Offices, Private	4L4T8-LP	2271	50%	6	98	2L4T8-SP-24RFL-OS	1590	38%	6	54	$57.23	$343.36	0.17	
WORK ROOM	Offices, Private	NOTHING	2271	50%	1	0	WCDT	2271	50%	1	0	$256.93	$256.93	0.00	
ART ROOM	Class	4L4T8-LP-OS	2365	100%	12	98	NO RETRO	2365	100%	12	98	$0.00	$0.00	0.00	
ART STORAGE	Storage	3L4T8-SP	2250	20%	2	85	3L4T8-SP-NR-OS	1575	15%	2	85	$0.00	$0.00	0.01	
ART STORAGE	Storage	NOTHING	2250	20%	1	0	WSIR	2250	20%	1	0	$79.32	$79.32	0.00	
CLASS 173	Class	3L4T8-SP-OS	2365	100%	12	82	NO RETRO	2365	100%	12	82	$0.00	$0.00	0.00	
CLASS 173 RR	Private RR	2L4T8-SP	2250	10%	1	58	NO RETRO	2250	10%	1	58	$0.00	$0.00	0.00	
CLASS 176	Class	3L4T8-SP-OS	2365	100%	12	82	NO RETRO	2365	100%	12	82	$0.00	$0.00	0.00	
CLASS 176 RR	Private RR	2L4T8-SP	2250	10%	1	58	NO RETRO	2250	10%	1	58	$0.00	$0.00	0.00	
CLASS 178	Class	3L4T8-SP-OS	2365	100%	12	82	NO RETRO	2365	100%	12	82	$0.00	$0.00	0.00	
CLASS 178 RR	Private RR	2L4T8-SP	2250	10%	1	58	NO RETRO	2250	10%	1	58	$0.00	$0.00	0.00	
CLASS 183	Class	3L4T8-SP-OS	2365	100%	12	82	NO RETRO	2365	100%	12	82	$0.00	$0.00	0.00	
CLASS 183 RR	Private RR	2L4T8-SP	2250	10%	1	58	NO RETRO	2250	10%	1	58	$0.00	$0.00	0.00	
CLASS 185	Class	3L4T8-SP-OS	2365	100%	12	82	NO RETRO	2365	100%	12	82	$0.00	$0.00	0.00	
CLASS 185 RR	Private RR	2L4T8-SP	2250	10%	1	58	NO RETRO	2250	10%	1	58	$0.00	$0.00	0.00	
CLASS 188	Class	3L4T8-SP-OS	2365	100%	12	82	NO RETRO	2365	100%	12	82	$0.00	$0.00	0.00	
CLASS 188 RR	Private RR	2L4T8-SP	2250	10%	1	58	NO RETRO	2250	10%	1	58	$0.00	$0.00	0.00	
MECH / MAINT	Mechanical	4L4T8-SP	2250	10%	3	112	NO RETRO	2250	10%	3	112	$0.00	$0.00	0.00	
MECH / MAINT	EM/Night	4L4T8-SP-EM	8766	100%	1	112	4L4T8-LP-DUAL	8766	100%	1	96	$61.15	$61.15	0.02	
CLASS 113	Class	4L4T8-LP	2455	100%	12	98	2L4T8-SP-24RFL-OS	1719	75%	12	54	$57.23	$686.72	0.69	1
CLASS 113	Class	NOTHING	2455	100%	1	0	WCDT	2455	100%	1	0	$256.93	$256.93	0.00	
CLASS 114	Class	4L4T8-LP	2455	100%	12	98	2L4T8-SP-24RFL-OS	1719	75%	12	54	$57.23	$686.72	0.69	1
CLASS 114	Class	NOTHING	2455	100%	1	0	WCDT	2455	100%	1	0	$256.93	$256.93	0.00	
CLASS 115	Class	4L4T8-LP	2455	100%	12	98	2L4T8-SP-24RFL-OS	1719	75%	12	54	$57.23	$686.72	0.69	1
CLASS 115	Class	NOTHING	2455	100%	1	0	WCDT	2455	100%	1	0	$256.93	$256.93	0.00	
CLASS 110	Class	4L4T8-LP	2455	100%	10	98	4L4T8-LP-NR-OS	1719	75%	10	98	$0.00	$0.00	0.25	
CLASS 110	Class	2L4T8-SP	2455	100%	2	58	2L4T8-LP-NR-OS	1719	75%	2	51	$0.00	$0.00	0.04	
CLASS 110	Class	NOTHING	2455	100%	1	0	WCDT	2455	100%	1	0	$256.93	$256.93	0.00	
110 SUPPLY	Supply	4L4T8-LP	2271	40%	3	98	2L4T8-SP-24RFL	2271	40%	3	54	$57.23	$171.68	0.05	
RESOURCE 111	Class	4L4T8-LP	2455	100%	8	98	2L4T8-SP-24RFL-OS	1719	75%	8	54	$57.23	$457.81	0.46	1
RESOURCE 111	Class	NOTHING	2455	100%	2	0	CIR	2455	100%	2	0	$256.93	$513.87	0.00	
RESOURCE OFFICE	Offices, Private	4L4T8-LP	2271	50%	1	98	2L4T8-SP-24RFL-OS	1590	38%	1	54	$57.23	$57.23	0.03	
RESOURCE OFFICE	Offices, Private	NOTHING	2271	50%	1	0	WSIR	2271	50%	1	0	$79.32	$79.32	0.00	
RESOURCE SUPPLY	Supply	4L4T8-LP	2271	40%	1	98	2L4T8-SP-24RFL-OS	1590	30%	1	54	$57.23	$57.23	0.02	
RESOURCE SUPPLY	Supply	NOTHING	2271	40%	1	0	WSIR	2271	40%	1	0	$79.32	$79.32	0.00	
RESOURCE CLASS	Class	4L4T8-LP	2455	100%	1	98	2L4T8-SP-24RFL-OS	1719	75%	1	54	$57.23	$57.23	0.06	
RESOURCE CLASS	Class	NOTHING	2455	100%	1	0	WSIR	1719	100%	1	0	$79.32	$79.32	0.00	
CUSTODIAL OFFICE	Offices, Private	1L8T8-SP	2271	50%	1	70	1L8T8-SP-NR-OS	1590	38%	1	70	$0.00	$0.00	0.01	
CUSTODIAL OFFICE	Offices, Private	NOTHING	2271	50%	1	0	WSIR	2271	50%	1	0	$79.32	$79.32	0.00	
CLASS 106	Class	4L4T8-LP	2455	100%	12	98	2L4T8-SP-24RFL-OS	1719	75%	12	54	$57.23	$686.72	0.69	1
CLASS 106	Class	NOTHING	2455	100%	1	0	WCDT	2455	100%	1	0	$256.93	$256.93	0.00	
CLASS 107	Class	4L4T8-LP	2455	100%	12	98	2L4T8-SP-24RFL-OS	1719	75%	12	54	$57.23	$686.72	0.69	1
CLASS 107	Class	NOTHING	2455	100%	1	0	WCDT	2455	100%	1	0	$256.93	$256.93	0.00	
CLASS 108	Class	4L4T8-LP	2455	100%	12	98	2L4T8-SP-24RFL-OS	1719	75%	12	54	$57.23	$686.72	0.69	1
CLASS 108	Class	NOTHING	2455	100%	1	0	WCDT	2455	100%	1	0	$256.93	$256.93	0.00	
BOYS RESTROOM	Halls Middle & Elem	2L4T8-LP	3646	100%	2	51	REMOVE	3646	100%	2	0	$18.56	$37.12	0.10	
BOYS RESTROOM	Halls Middle & Elem	NOTHING	3646	100%	1	0	N2L4T8-SP-8'WR	3646	100%	1	54	$161.94	$161.94	-0.05	-
GIRLS RESTROOM	Halls Middle & Elem	2L4T8-LP	3646	100%	1	51	REMOVE	3646	100%	1	0	$18.56	$18.56	0.05	
GIRLS RESTROOM	Halls Middle & Elem	NOTHING	3646	100%	1	0	N1L4T8-HP-4'WR	3646	100%	1	38	$121.87	$121.87	-0.04	-
KINDERGARTEN 109	Class	4L4T8-LP	2455	100%	14	98	2L4T8-SP-24RFL-OS	1719	75%	14	54	$57.23	$801.17	0.81	2
KINDERGARTEN 109	Class	NOTHING	2455	100%	1	0	WCDT	2455	100%	1	0	$256.93	$256.93	0.00	
RRS	Private RR	2L100IN	2250	10%	2	200	N2L2T8-SP-2'WL	2250	10%	2	32	$147.88	$295.75	0.03	
CUSTODIAL	Custodial	1L4T8-SP	2250	30%	1	32	NO RETRO	2250	30%	1	32	$0.00	$0.00	0.00	
MULTI PURPOSE ROOM	Gym	1L400HID	2523	100%	11	458	N6L4T8-HP-LNS-WG-OS	1766	75%	11	222	$438.15	$4,819.60	3.21	8
MULTI PURPOSE ROOM	Gym	2L8T8-SP	2523	100%	6	110	REMOVE	2523	100%	6	0	$19.79	$118.76	0.66	1
MULTI PURPOSE ROOM	Gym	NOTHING	2523	100%	2	0	WCIR	2523	100%	2	0	$316.78	$633.56	0.00	
KITCHEN	Kitchen	2L4T8-LP	800	100%	10	51	NO RETRO	800	100%	10	51	$0.00	$0.00	0.00	
TABLE STORAGE	Storage	2L8T8-SP	2250	20%	2	110	2L8T8-SP-NR-OS	1575	15%	2	110	$0.00	$0.00	0.01	
TABLE STORAGE	Storage	NOTHING	2250	20%	1	0	WSIR	1575	20%	1	0	$79.32	$79.32	0.00	
MECH / MAINT	Mechanical	2L8T8-SP	2250	10%	2	110	2L8T8-SP-NR-OS	1575	8%	2	110	$0.00	$0.00	0.01	
MECH / MAINT	Mechanical	NOTHING	2250	10%	1	0	WSIR	2250	10%	1	0	$79.32	$79.32	0.00	
GYM STORAGE	Storage	2L8T8-SP	2250	20%	2	110	2L8T8-SP-NR-OS	1575	15%	2	110	$0.00	$0.00	0.01	
GYM STORAGE	Storage	NOTHING	2250	20%	1	0	WSIR	2250	20%	1	0	$79.32	$79.32	0.00	
STAGE / MUSIC CLASS	Class	4L4T8-LP	2455	100%	13	98	2L4T8-SP-24RFL-OS	1719	75%	13	54	$57.23	$743.95	0.75	1
STAGE / MUSIC CLASS	Class	NOTHING	2455	100%	1	0	WCIR	2455	100%	1	0	$256.93	$256.93	0.00	
STAGE CORRIDOR	Halls Middle & Elem	4L4T8-SP	3646	100%	3	112	2L4T8-SP-24RFL	3646	100%	3	54	$57.23	$171.68	0.17	
MUSIC 195	Class	3L4T8-SP-OS	2365	100%	16	82	NO RETRO	2365	100%	16	82	$0.00	$0.00	0.00	
MUSIC 195	Class	3L2T8-SP-OS	2365	100%	2	45	NO RETRO	2365	100%	2	45	$0.00	$0.00	0.00	
MUSIC 195	EM/Night	LED EXIT	8766	100%	2	3	NO RETRO	8766	100%	2	3	$0.00	$0.00	0.00	
BOYS RESTROOM	Halls Middle & Elem	2L4T8-LP	3646	100%	2	51	REMOVE	3646	100%	2	0	$18.56	$37.12	0.10	
BOYS RESTROOM	Halls Middle & Elem	NOTHING	3646	100%	1	0	N2L4T8-SP-8'WR	3646	100%	1	54	$161.94	$161.94	-0.05	-
GIRLS RESTROOM	Halls Middle & Elem	2L4T8-LP	3646	100%	1	51	REMOVE	3646	100%	1	0	$18.56	$18.56	0.05	
GIRLS RESTROOM	Halls Middle & Elem	NOTHING	3646	100%	1	0	N1L4T8-HP-4'WR	3646	100%	1	38	$121.87	$121.87	-0.04	-
CLASS 102	Class	3L4T8-SP-OS	2365	100%	12	82	NO RETRO	2365	100%	12	82	$0.00	$0.00	0.00	

CLASS 103	Class	3L4T8-SP-OS	2365	100%	12	82	NO RETRO	2365	100%	12	82	$0.00	$0.00	0.00	
CLASS 104	Class	3L4T8-SP-OS	2365	100%	12	82	NO RETRO	2365	100%	12	82	$0.00	$0.00	0.00	
CLASS 105	Class	3L4T8-SP-OS	2365	100%	12	82	NO RETRO	2365	100%	12	82	$0.00	$0.00	0.00	
CLASS 120	Class	3L4T8-SP-OS	2365	100%	12	82	NO RETRO	2365	100%	12	82	$0.00	$0.00	0.00	
WORK ROOM	Offices, Private	3L4T8-SP	2271	50%	3	85	2L4T8-SP-24RFL	2271	50%	3	54	$56.77	$170.31	0.05	
WORK ROOM	Offices, Private	NOTHING	2271	50%	1	0	WSIR	2271	50%	1	0	$79.32	$79.32	0.00	
CLASS 101	Class	3L4T8-SP-OS	2365	100%	12	82	NO RETRO	2365	100%	12	82	$0.00	$0.00	0.00	
NEW GYM	Gym	1L250HID	2523	100%	16	295	N6L4T8-HP-LNS-WG-OS	1766	100%	16	222	$438.15	$7,010.33	1.17	5
NEW GYM	Gym	NOTHING	2523	100%	2	0	WCIR	2523	100%	2	0	$316.78	$633.56	0.00	
NEW GYM	EM/Night	LED EXIT	8766	100%	3	3	NO RETRO	8766	100%	3	3	$0.00	$0.00	0.00	
GYM STORAGE	Storage	2L4T8-SP	2250	20%	4	58	2L4T8-SP-NR-OS	1575	15%	4	58	$0.00	$0.00	0.01	
GYM STORAGE	Storage	NOTHING	2250	20%	1	0	WSIR	2250	20%	1	0	$79.32	$79.32	0.00	
WATER RISER	Mechanical	2L4T8-SP	2250	10%	1	58	2L4T8-SP-NR-OS	1575	8%	1	58	$0.00	$0.00	0.00	
WATER RISER	Mechanical	NOTHING	2250	10%	1	0	WSIR	2250	10%	1	0	$79.32	$79.32	0.00	
SHOWER	Storage	2L4T8-SP	2250	20%	1	58	NO RETRO	2250	20%	1	58	$0.00	$0.00	0.00	
COACH OFFICE	Offices, Private	3L4T8-SP	2271	50%	3	85	2L4T8-SP-24RFL	2271	50%	3	54	$56.77	$170.31	0.05	
COACH OFFICE	Offices, Private	NOTHING	2271	50%	1	0	WSIR	2271	50%	1	0	$79.32	$79.32	0.00	
GIRLS RESTROOM	Halls Middle & Elem	3L4T8-SP	3646	100%	2	85	2L4T8-SP-24RFL	3646	100%	2	54	$56.77	$113.54	0.06	
GIRLS RESTROOM	Halls Middle & Elem	2L4T8-SP	3646	100%	3	58	NO RETRO	3646	100%	3	58	$0.00	$0.00	0.00	
BOYS RESTROOM	Halls Middle & Elem	3L4T8-SP	3646	100%	2	85	2L4T8-SP-24RFL	3646	100%	2	54	$56.77	$113.54	0.06	
BOYS RESTROOM	Halls Middle & Elem	2L4T8-SP	3646	100%	3	58	NO RETRO	3646	100%	3	58	$0.00	$0.00	0.00	
CUSTODIAL	Custodial	2L4T8-SP	2250	30%	1	58	2L4T8-SP-NR-OS	1575	23%	1	58	$0.00	$0.00	0.00	
CUSTODIAL	Custodial	NOTHING	2250	30%	1	0	WSIR	2250	30%	1	0	$79.32	$79.32	0.00	
MEDIA CENTER	EM/Night	4L4T8-SP-EM	8766	100%	6	112	4L4T8-SP-NR-ADDSW	1864	100%	6	112	$0.00	$0.00	0.00	4
MEDIA CENTER	EM/Night	2L4T8-SP-EM	8766	100%	3	58	2L4T8-SP-NR-ADDSW	1864	100%	3	58	$0.00	$0.00	0.00	1
MEDIA CENTER	EM/Night	2L4T8-SP-EM	8766	100%	3	58	2L4T8-SP-PCDIM-ADDSW	932	50%	3	58	$91.41	$274.22	0.09	1
MEDIA CENTER	Library	4L4T8-SP	2000	90%	4	112	NO RETRO	2000	90%	4	112	$0.00	$0.00	0.00	
MEDIA CENTER	Library	2L4T8-SP	2000	90%	2	58	NO RETRO	2000	90%	2	58	$0.00	$0.00	0.00	
MEDIA CENTER	Library	2L4T8-SP	2000	90%	2	58	2L4T8-SP-PCDIM	1000	45%	2	58	$91.41	$182.81	0.05	
MEDIA CENTER	Library	1L32CF	2000	90%	11	32	1L32CF-NR-PC	1000	45%	11	32	$0.00	$0.00	0.16	
MEDIA CENTER	Library	1L32CF	2000	90%	4	32	NO RETRO	2000	90%	4	32	$0.00	$0.00	0.00	
MEDIA CENTER	Library	NOTHING	2000	90%	1	0	PHOTOCELL	2000	90%	1	0	$95.25	$95.25	0.00	
MEDIA CENTER	Library	2LF40-BIAX	2000	90%	14	71	NO RETRO	2000	90%	14	71	$0.00	$0.00	0.00	
MEDIA CENTER	EM/Night	LED EXIT	8766	100%	1	3	NO RETRO	8766	100%	1	3	$0.00	$0.00	0.00	
OFFICE / WORK ROOM	Offices, Private	3L4T8-SP	2271	50%	4	85	2L4T8-SP-24RFL	2271	50%	4	54	$56.77	$227.08	0.06	
OFFICE / WORK ROOM	Offices, Private	NOTHING	2271	50%	1	0	WSIR	2271	50%	1	0	$79.32	$79.32	0.00	
READING NOOK	Library	3L4T8-SP	2000	90%	4	85	2L4T8-SP-24RFL	2000	90%	4	54	$56.77	$227.08	0.11	
READING NOOK	Library	NOTHING	2000	90%	1	0	WSIR	2000	90%	1	0	$79.32	$79.32	0.00	
COMPUTER LAB	Class	3L4T8-SP-OS	2455	100%	12	82	NO RETRO	2455	100%	12	82	$0.00	$0.00	0.00	
TECH OFFICE	Offices, Private	3L4T8-SP	2271	50%	1	85	2L4T8-SP-24RFL	2271	50%	1	54	$56.77	$56.77	0.02	
TECH OFFICE	Offices, Private	NOTHING	2271	50%	1	0	WSIR	2271	50%	1	0	$79.32	$79.32	0.00	
PENTHOUSE MECH	Mechanical	2L4T8-SP	2250	10%	8	58	NO RETRO	2250	10%	8	58	$0.00	$0.00	0.00	
ELECTRICAL ROOM	Mechanical	2L4T8-SP	2250	10%	1	58	NO RETRO	2250	10%	1	58	$0.00	$0.00	0.00	
STORAGE	Storage	2L4T8-SP	2250	20%	1	58	NO RETRO	2250	20%	1	58	$0.00	$0.00	0.00	
COMMONS ATRIUM	Halls Middle & Elem	1L400HID	3646	100%	4	458	N6L4T8-HP-DEC	3646	100%	4	222	$274.11	$1,096.45	0.94	3
COMMONS ATRIUM	Halls Middle & Elem	1L400HID	3646	100%	2	458	N6L4T8-HP-DEC-PC	1823	50%	2	222	$274.11	$548.23	0.69	2
COMMONS ATRIUM	Halls Middle & Elem	NOTHING	3646	100%	1	0	PHOTOCELL	3646	100%	1	0	$95.25	$95.25	0.00	
COMMONS ATRIUM	Halls Middle & Elem	1L32CF	3646	100%	3	32	1L32CF-NR-PC	1823	50%	3	32	$0.00	$0.00	0.05	
COMMONS ATRIUM	Halls Middle & Elem	NOTHING	3646	100%	1	0	PHOTOCELL	3646	100%	1	0	$95.25	$95.25	0.00	
COMMONS ATRIUM	Halls Middle & Elem	1L32CF	3646	100%	3	32	NO RETRO	3646	100%	3	32	$0.00	$0.00	0.00	
COMMONS ATRIUM	Halls Middle & Elem	2L26CF	3646	100%	6	54	NO RETRO	3646	100%	6	54	$0.00	$0.00	0.00	
COMMONS ATRIUM	EM/Night	LED EXIT	8766	100%	2	3	NO RETRO	8766	100%	2	3	$0.00	$0.00	0.00	
HALL SOUTH	Halls Middle & Elem	2L4T8-SP	3646	100%	20	58	NO RETRO	3646	100%	20	58	$0.00	$0.00	0.00	
HALL SOUTH	Halls Middle & Elem	1L32CF	3646	100%	7	32	NO RETRO	3646	100%	7	32	$0.00	$0.00	0.00	
HALL SOUTH	EM/Night	LED EXIT	8766	100%	2	3	NO RETRO	8766	100%	2	3	$0.00	$0.00	0.00	
PE HALL	Halls Middle & Elem	2L4T8-SP	3646	100%	5	58	NO RETRO	3646	100%	5	58	$0.00	$0.00	0.00	
PE HALL	Halls Middle & Elem	1L32CF	3646	100%	6	32	1L32CF-NR-PC	1823	50%	6	32	$0.00	$0.00	0.10	
PE HALL	Halls Middle & Elem	NOTHING	3646	100%	1	0	PHOTOCELL	3646	100%	1	0	$95.25	$95.25	0.00	
PE HALL	EM/Night	LED EXIT	8766	100%	1	3	NO RETRO	8766	100%	1	3	$0.00	$0.00	0.00	
CENTER HALLS	Halls Middle & Elem	4L4T8-LP	3646	100%	26	98	2L4T8-SP-24RFL	3646	100%	26	54	$57.23	$1,487.89	1.14	4
CENTER HALLS	EM/Night	LED EXIT	8766	100%	7	3	NO RETRO	8766	100%	7	3	$0.00	$0.00	0.00	
NORTH HALLS	Halls Middle & Elem	3L4T8-SP	3646	100%	8	85	2L4T8-SP-24RFL	3646	100%	8	54	$56.77	$454.16	0.25	
NORTH HALLS	Halls Middle & Elem	2L26CF	3646	100%	12	54	NO RETRO	3646	100%	12	54	$0.00	$0.00	0.00	
NORTH HALLS	EM/Night	LED EXIT	8766	100%	1	3	NO RETRO	8766	100%	1	3	$0.00	$0.00	0.00	
MODULAR CLASS / STOR	Storage	4L4T8-SP	2250	20%	12	112	NO RETRO	2250	20%	12	112	$0.00	$0.00	0.00	
TOTALS					675					675			**$31,932.82**	**16.43**	5

* Based on ANSI wattages - to be verified by contractor
** Based on manufacturer's wattages - to be verified by contractor

BUILDING: Granby Elementary School
LIGHTING CONTRACTOR: Contractor Name
ELECTRIC CONSUMPTION RATE: $0.06600 per kWh
ELECTRIC DEMAND RATE: $4.35 per kW
HEATING FUEL RATE: $8.290 per MMBtu

ECM 5.1: Lighting system upgrades

		EXISTING					PROPOSED								
AREA	USAGE TYPE	EXISTING FIXTURE DESCRIPTION	ANNUAL HOURS	Demand Div Factor	QTY	WATTS EACH*	RETROFIT DESCRIPTION	ANNUAL HOURS	Demand Div Factor	QTY	WATTS EACH**	UNIT PRICE	TOTAL EXTENDED PRICE	TOTAL KW SAVED	S/ PI
CLASS 130	Class	3L4T8-LP-DUAL	2455	100%	13	80	3L4T8-LP-DUAL-NR-OS	1719	75%	13	80	$0.00	$0.00	0.26	
CLASS 130	Class	NOTHING	2455	100%	1	0	WCDT	2455	100%	1	0	$256.93	$256.93	0.00	
RRS	Private RR	2L2T12	2250	10%	2	49	2L2T8-LP	2250	10%	2	28	$36.24	$72.48	0.00	
CLASS 129	Class	3L4T8-LP-DUAL	2455	100%	13	80	3L4T8-LP-DUAL-NR-OS	1719	75%	13	80	$0.00	$0.00	0.26	
CLASS 129	Class	NOTHING	2455	100%	1	0	WCDT	2455	100%	1	0	$256.93	$256.93	0.00	
RRS	Private RR	2L2T12	2250	10%	2	49	2L2T8-LP	2250	10%	2	28	$36.24	$72.48	0.00	
COMPUTER LAB 128	Class	3L4T8-LP-DUAL	2455	100%	10	80	3L4T8-LP-DUAL-NR-OS	1719	75%	10	80	$0.00	$0.00	0.20	
COMPUTER LAB 129	Class	NOTHING	2455	100%	1	0	WCDT	2455	100%	1	0	$256.93	$256.93	0.00	
CLASS 139	Class	3L4T8-LP-DUAL	2455	100%	13	80	3L4T8-LP-DUAL-NR-OS	1719	75%	13	80	$0.00	$0.00	0.26	
CLASS 139	Class	NOTHING	2455	100%	1	0	WCDT	2455	100%	1	0	$256.93	$256.93	0.00	
RRS	Private RR	2L2T12	2250	10%	2	49	2L2T8-LP	2250	10%	2	28	$36.24	$72.48	0.00	
CLASS 138	Class	3L4T8-LP-DUAL	2455	100%	13	80	3L4T8-LP-DUAL-NR-OS	1719	75%	13	80	$0.00	$0.00	0.26	
CLASS 138	Class	NOTHING	2455	100%	1	0	WCDT	2455	100%	1	0	$256.93	$256.93	0.00	
RRS	Private RR	2L2T12	2250	10%	2	49	2L2T8-LP	2250	10%	2	28	$36.24	$72.48	0.00	
CLASS 137	Class	3L4T8-LP-DUAL	2455	100%	15	80	3L4T8-LP-DUAL-NR-OS	1719	75%	15	80	$0.00	$0.00	0.30	
CLASS 137	Class	NOTHING	2455	100%	1	0	WCDT	2455	100%	1	0	$256.93	$256.93	0.00	
CLASS 136	Class	3L4T8-LP-DUAL	2455	100%	15	80	3L4T8-LP-DUAL-NR-OS	1719	75%	15	80	$0.00	$0.00	0.30	
CLASS 136	Class	NOTHING	2455	100%	1	0	WCDT	2455	100%	1	0	$256.93	$256.93	0.00	
MEDIA 124	Library	3L4T8-LP	2000	90%	8	76	3L4T8-LP-NR-OS	1400	68%	8	76	$0.00	$0.00	0.14	
MEDIA 124	Library	NOTHING	2000	90%	1	0	WCDT	2000	90%	1	0	$256.93	$256.93	0.00	
MEDIA 124	Library	3L4T8-LP	2000	90%	36	76	3L4T8-LP-NR-OS	1400	68%	36	76	$0.00	$0.00	0.62	1
MEDIA 124	Library	NOTHING	2000	90%	2	0	WCDT	2000	90%	2	0	$256.93	$513.87	0.00	
MEDIA 124	EM/Night	LED EXIT	8766	100%	1	3	NO RETRO	8766	100%	1	3	$0.00	$0.00	0.00	
MEDIA SUPPLY 123	Supply	3L4T8-LP-DUAL	2000	40%	9	80	3L4T8-LP-DUAL-NR-OS	1400	30%	9	80	$0.00	$0.00	0.07	
MEDIA SUPPLY 123	Supply	NOTHING	2000	40%	1	0	WCDT	2000	40%	1	0	$256.93	$256.93	0.00	
MEDIA OFFICE 125	Offices, Private	3L4T8-LP-DUAL	2271	50%	4	80	3L4T8-LP-DUAL-NR-OS	1590	38%	4	80	$0.00	$0.00	0.04	
MEDIA OFFICE 125	Offices, Private	NOTHING	2271	50%	1	0	WCDT	2271	50%	1	0	$256.93	$256.93	0.00	
WORK ROOM 126	Offices, Private	3L4T8-LP-DUAL	2271	50%	3	80	3L4T8-LP-DUAL-NR-OS	1590	38%	3	80	$0.00	$0.00	0.03	
WORK ROOM 126	Offices, Private	NOTHING	2271	50%	1	0	WSIR-2P	2271	50%	1	0	$79.32	$79.32	0.00	
STORAGE 127	Storage	4L4T8-LP	2250	20%	1	98	2L4T8-SP-24RFL-OS	1575	15%	1	54	$57.23	$57.23	0.01	
STORAGE 127	Storage	NOTHING	2250	20%	1	0	WSIR	2250	20%	1	0	$79.32	$79.32	0.00	
RRS	Common RR	2L4T8-LP	3646	100%	8	51	NO RETRO	3646	100%	8	51	$0.00	$0.00	0.00	
RESOURCE 117	Class	3L4T8-LP-DUAL	2455	100%	7	80	3L4T8-LP-DUAL-NR-OS	1719	75%	7	80	$0.00	$0.00	0.14	
RESOURCE 117	Class	NOTHING	2455	100%	1	0	WCDT	2455	100%	1	0	$256.93	$256.93	0.00	
SUPPLY 118	Supply	3L4T8-LP	2271	40%	2	76	3L4T8-LP-NR-OS	1590	30%	2	76	$0.00	$0.00	0.02	
SUPPLY 118	Supply	NOTHING	2271	40%	1	0	WSIR	2271	40%	1	0	$79.32	$79.32	0.00	
CLASS 119	Class	3L4T8-LP	2455	100%	2	76	3L4T8-LP-NR-OS	1719	75%	2	76	$0.00	$0.00	0.04	
CLASS 119	Class	NOTHING	2455	100%	1	0	WSIR	2455	100%	1	0	$79.32	$79.32	0.00	
OFFICE 120	Offices, Private	3L4T8-LP	2271	50%	2	76	3L4T8-LP-NR-OS	1590	38%	2	76	$0.00	$0.00	0.02	
OFFICE 120	Offices, Private	NOTHING	2271	50%	1	0	WSIR	2271	50%	1	0	$79.32	$79.32	0.00	
OFFICE 116	Offices, Private	3L4T8-LP	2271	50%	2	76	3L4T8-LP-NR-OS	1590	38%	2	76	$0.00	$0.00	0.02	
OFFICE 116	Offices, Private	NOTHING	2271	50%	1	0	WSIR	2271	50%	1	0	$79.32	$79.32	0.00	
OFFICE 115	Offices, Private	3L4T8-LP	2271	50%	2	76	3L4T8-LP-NR-OS	1590	38%	2	76	$0.00	$0.00	0.02	
OFFICE 115	Offices, Private	NOTHING	2271	50%	1	0	WSIR	2271	50%	1	0	$79.32	$79.32	0.00	
OFFICE 114	Offices, Private	3L4T8-LP	2271	50%	2	76	3L4T8-LP-NR-OS	1590	38%	2	76	$0.00	$0.00	0.02	
OFFICE 114	Offices, Private	NOTHING	2271	50%	1	0	WSIR	2271	50%	1	0	$79.32	$79.32	0.00	
WOMENS STAFF RR 111	Private RR	2L4T8-LP	2250	10%	1	51	2L4T8-LP-NR-OS	1575	8%	1	51	$0.00	$0.00	0.00	
WOMENS STAFF RR 111	Private RR	NOTHING	2250	10%	1	0	WSIR	2250	10%	1	0	$79.32	$79.32	0.00	
MENS STAFF RR 110	Private RR	2L4T8-LP	2250	10%	1	51	2L4T8-LP-NR-OS	1575	8%	1	51	$0.00	$0.00	0.00	
MENS STAFF RR 110	Private RR	NOTHING	2250	10%	1	0	WSIR	2250	10%	1	0	$79.32	$79.32	0.00	
LAUNDRY 105	Custodial	2L4T8-LP	2250	30%	2	51	2L4T8-LP-NR-OS	1575	23%	2	51	$0.00	$0.00	0.01	
LAUNDRY 105	Custodial	NOTHING	2250	30%	1	0	WSIR	2250	30%	1	0	$79.32	$79.32	0.00	
ELECTRIC ROOM	Mechanical	2L4T8-LP	2250	10%	1	51	NO RETRO	2250	10%	1	51	$0.00	$0.00	0.00	
CUSTODIAL 107	Custodial	2L4T8-LP	2250	30%	1	51	2L4T8-LP-NR-OS	1575	23%	1	51	$0.00	$0.00	0.00	
CUSTODIAL 107	Custodial	NOTHING	2250	30%	1	0	WSIR	2250	30%	1	0	$79.32	$79.32	0.00	
CLASS 101	Class	3L4T8-LP-DUAL	2455	100%	15	80	3L4T8-LP-DUAL-NR-OS	1719	75%	15	80	$0.00	$0.00	0.30	
CLASS 101	Class	NOTHING	2455	100%	1	0	WCDT	2455	100%	1	0	$256.93	$256.93	0.00	
CLASS 102	Class	3L4T8-LP-DUAL	2455	100%	15	80	3L4T8-LP-DUAL-NR-OS	1719	75%	15	80	$0.00	$0.00	0.30	
CLASS 102	Class	NOTHING	2455	100%	1	0	WCDT	2455	100%	1	0	$256.93	$256.93	0.00	
CLASS 103	Class	3L4T8-LP-DUAL	2455	100%	15	80	3L4T8-LP-DUAL-NR-OS	1719	75%	15	80	$0.00	$0.00	0.30	
CLASS 103	Class	NOTHING	2455	100%	1	0	WCDT	2455	100%	1	0	$256.93	$256.93	0.00	
CLASS 104	Class	3L4T8-LP-DUAL	2455	100%	15	80	3L4T8-LP-DUAL-NR-OS	1719	75%	15	80	$0.00	$0.00	0.30	
CLASS 104	Class	NOTHING	2455	100%	1	0	WCDT	2455	100%	1	0	$256.93	$256.93	0.00	
TITLE 1	Class	3L4T8-SP	2455	100%	4	85	3L4T8-SP-NR-OS	1719	75%	4	85	$0.00	$0.00	0.09	
TITLE 1	Class	NOTHING	2455	100%	1	0	WCDT	2455	100%	1	0	$256.93	$256.93	0.00	
3RD GRADE	Class	3L4T8-SP	2455	100%	9	85	3L4T8-SP-NR-OS	1719	75%	9	85	$0.00	$0.00	0.19	
TITLE 1	Class	3L4T8-SP	2455	100%	4	85	3L4T8-SP-NR-OS	1719	75%	4	85	$0.00	$0.00	0.09	
TITLE 1	Class	NOTHING	2455	100%	1	0	WCDT	2455	100%	1	0	$256.93	$256.93	0.00	
3RD GRADE	Class	3L4T8-SP	2455	100%	9	85	3L4T8-SP-NR-OS	1719	75%	9	85	$0.00	$0.00	0.19	
3RD GRADE	Class	NOTHING	2455	100%	1	0	WCDT	2455	100%	1	0	$256.93	$256.93	0.00	
MAIN OFFICE	Common Admin	3L4T8-SP	2271	100%	4	85	NO RETRO	2271	100%	4	85	$0.00	$0.00	0.00	
MAIN OFFICE	EM/Night	LED EXIT	8766	100%	4	3	NO RETRO	8766	100%	4	3	$0.00	$0.00	0.00	
OFFICE CORRIDORS	Common Admin	4L4T8-LP	3646	100%	4	98	2L4T8-SP-24RFL	3646	100%	4	54	$57.23	$228.91	0.18	
OFFICE CORRIDORS	Common Admin	3L4T8-SP	3646	100%	3	85	NO RETRO	3646	100%	3	85	$0.00	$0.00	0.00	
NURSE	Common Admin	3L4T8-SP	3646	100%	2	85	NO RETRO	3646	100%	2	85	$0.00	$0.00	0.00	
NURSE RR	Private RR	3L4T8-SP	2250	10%	1	85	NO RETRO	2250	10%	1	85	$0.00	$0.00	0.00	
PRINCIPAL OFFICE	Offices, Private	4L4T8-LP	2271	50%	2	98	4L4T8-LP-NR-OS	1590	38%	2	98	$0.00	$0.00	0.02	
PRINCIPAL OFFICE	Offices, Private	NOTHING	2271	50%	1	0	WSDT	2271	50%	1	0	$114.31	$114.31	0.00	
CONFERENCE ROOM	Conference	4L4T8-LP	2271	40%	4	98	4L4T8-LP-NR-OS	1590	30%	4	98	$0.00	$0.00	0.04	
CONFERENCE ROOM	Conference	NOTHING	2271	40%	1	0	WSIR	2271	40%	1	0	$79.32	$79.32	0.00	
RECORDS	Common Admin	1L8T8-SP	2271	100%	1	70	1L8T8-SP-NR-OS	1590	75%	1	70	$0.00	$0.00	0.02	
RECORDS	Common Admin	NOTHING	2271	100%	1	0	WSIR	2271	100%	1	0	$79.32	$79.32	0.00	
OFFICE	Offices, Private	4L4T8-LP	2271	50%	2	98	2L4T8-SP-24RFL-OS	1590	38%	2	54	$57.23	$114.45	0.06	

OFFICE	Offices, Private	NOTHING	2271	50%	1	0	WSDT	2271	50%	1	0	$114.31	$114.31	0.00	
OFFICE	Offices, Private	4L4T8-LP	2271	50%	2	98	2L4T8-SP-24RFL-OS	1590	38%	2	54	$57.23	$114.45	0.06	
RR	Private RR	2L100IN	2271	10%	1	200	N2L2T8-SP-2'WL	2271	10%	1	32	$147.88	$147.88	0.02	
RRS	Private RR	2L100IN	2271	10%	2	200	N2L2T8-SP-2'WL	2271	10%	2	32	$147.88	$295.75	0.03	
MAINT OFFICE	Offices, Private	2L8T8-SP	2271	50%	1	110	NO RETRO	2271	50%	1	110	$0.00	$0.00	0.00	
MAIL ROOM	Offices, Private	1L8T8-SP	2271	50%	1	70	NO RETRO	2271	50%	1	70	$0.00	$0.00	0.00	
WORK ROOM	Offices, Private	4L4T8-LP	2271	50%	8	98	2L4T8-SP-24RFL-OS	1590	38%	8	54	$57.23	$457.81	0.23	1
WORK ROOM	Offices, Private	NOTHING	2271	50%	1	0	WCIR	2271	50%	1	0	$256.93	$256.93	0.00	
COUNSELLING OFFICE	Offices, Private	4L4T8-LP	2271	50%	2	98	2L4T8-SP-24RFL-OS	1590	38%	2	54	$57.23	$114.45	0.06	
COUNSELLING OFFICE	Offices, Private	NOTHING	2271	50%	1	0	WSIR	2271	50%	1	0	$79.32	$79.32	0.00	
COUNSELLING OFFICE	Offices, Private	4L4T8-LP	2271	50%	2	98	2L4T8-SP-24RFL-OS	1590	38%	2	54	$57.23	$114.45	0.06	
COUNSELLING OFFICE	Offices, Private	NOTHING	2271	50%	1	0	WSIR	2271	50%	1	0	$79.32	$79.32	0.00	
MECHANICAL	Mechanical	1L8T8-SP	2271	10%	2	70	NO RETRO	2271	10%	2	70	$0.00	$0.00	0.00	
CAFETERIA	Halls Middle & Elem	2L4T8-LP	2250	100%	34	51	2L4T8-LP-NR-OS	1575	75%	34	51	$0.00	$0.00	0.43	1
CAFETERIA	Halls Middle & Elem	NOTHING	2250	100%	2	0	WCIR	2250	100%	2	0	$256.93	$513.87	0.00	
CAFETERIA	EM/Night	LED EXIT	8766	100%	1	3	NO RETRO	8766	100%	1	3	$0.00	$0.00	0.00	
KITCHEN	Kitchen	2L4T8-LP	800	100%	12	51	NO RETRO	800	100%	12	51	$0.00	$0.00	0.00	
KIT LOCKER	Kitchen	1L4T8-SP	800	100%	1	32	NO RETRO	800	100%	1	32	$0.00	$0.00	0.00	
KITCHEN RR	Private RR	2L100IN	800	10%	1	200	N2L2T8-SP-2'WL	800	10%	1	32	$147.88	$147.88	0.02	
STOR ROOM	Storage	1L8T8-SP	800	20%	1	70	NO RETRO	800	20%	1	70	$0.00	$0.00	0.00	
RRS	Common RR	2L4T8-LP	3646	100%	5	51	REMOVE	3646	100%	5	0	$18.56	$92.81	0.26	
RRS	Common RR	NOTHING	3646	100%	2	0	N2L4T8-SP-8'WR	3646	100%	2	54	$161.94	$323.88	-0.11	-
RRS	Common RR	NOTHING	3646	100%	1	0	N1L4T8-SP-4'WR	3646	100%	1	28	$121.87	$121.87	-0.03	-
MUSIC	Class	4L4T8-LP	2455	100%	18	98	2L4T8-SP-24RFL-OS	1719	75%	18	54	$57.23	$1,030.08	1.04	2
MUSIC	Class	NOTHING	2455	100%	1	0	WCDT	2455	100%	1	0	$256.93	$256.93	0.00	
MUSIC	EM/Night	LED EXIT	8766	100%	1	3	NO RETRO	8766	100%	1	3	$0.00	$0.00	0.00	
ART	Class	4L4T8-LP	2455	100%	14	98	4L4T8-LP-NR-OS	1719	75%	14	98	$0.00	$0.00	0.34	1
ART	Class	NOTHING	2455	100%	1	0	WCDT	2455	100%	1	0	$256.93	$256.93	0.00	
ART	Class	LED EXIT	2455	100%	1	3	NO RETRO	2455	100%	1	3	$0.00	$0.00	0.00	
ART STORAGE	Storage	1L8T8-SP	2250	20%	1	70	1L8T8-SP-NR-OS	1575	15%	1	70	$0.00	$0.00	0.00	
ART STORAGE	Storage	NOTHING	2250	20%	1	0	WSIR	2250	20%	1	0	$79.32	$79.32	0.00	
PRESCHOOL	Class	4L4T8-LP	2455	100%	15	98	2L4T8-SP-24RFL-OS	1719	75%	15	54	$57.23	$858.40	0.86	2
PRESCHOOL	Class	NOTHING	2455	100%	1	0	WCDT	2455	100%	1	0	$256.93	$256.93	0.00	
RRS	Private RR	2L100IN	2250	10%	2	200	N2L2T8-SP-2'WL	2250	10%	2	32	$147.88	$295.75	0.03	
GYM	Gym	1L400HID	2330	100%	24	458	N6L4T8-HP-LNS-WG-OS	1631	75%	24	222	$438.15	$10,515.50	7.00	1(
GYM	Gym	NOTHING	2330	100%	2	0	WCIR	2330	100%	2	0	$316.78	$633.56	0.00	
GYM	EM/Night	LED EXIT	8766	100%	3	3	NO RETRO	8766	100%	3	3	$0.00	$0.00	0.00	
VESTIBULE	Halls Middle & Elem	1L100IN	3646	100%	1	100	N1L13CF-CPY	3646	100%	1	14	$87.84	$87.84	0.09	
GYM STORAGE	Storage	2L4T8-LP	2250	20%	1	51	NO RETRO	2250	20%	1	51	$0.00	$0.00	0.00	
EQUIP STORAGE	Storage	2L8T8-SP	2250	20%	7	110	2L8T8-SP-NR-OS	1575	15%	7	110	$0.00	$0.00	0.04	
EQUIP STORAGE	Storage	2L4T8-LP	2250	20%	4	51	2L4T8-LP-NR-OS	1575	15%	4	51	$0.00	$0.00	0.01	
EQUIP STORAGE	Storage	NOTHING	2250	20%	1	0	WCIR	2250	20%	1	0	$256.93	$256.93	0.00	
RRS	Common RR	2L4T8-LP	3646	100%	4	51	N1L4T8-SP-4'WR	3646	100%	4	28	$123.11	$492.42	0.09	
WORK ROOM 125	Offices, Private	2L4T8-LP	2271	50%	2	51	2L4T8-LP-NR-OS	1590	38%	2	51	$0.00	$0.00	0.01	
WORK ROOM 125	Offices, Private	NOTHING	2271	50%	1	0	WSIR	2271	50%	1	0	$79.32	$79.32	0.00	
CLASS 301	Class	3L4T8-SP-OS	2455	100%	7	82	NO RETRO	2455	100%	7	82	$0.00	$0.00	0.00	
RR	Private RR	2L4T8-SP	2250	10%	1	58	NO RETRO	2250	10%	1	58	$0.00	$0.00	0.00	
OFFICE	Offices, Private	3L4T8-SP	2271	50%	2	85	3L4T8-SP-NR-OS	1590	38%	2	85	$0.00	$0.00	0.02	
OFFICE	Offices, Private	NOTHING	2271	50%	1	0	WSIR	2271	50%	1	0	$79.32	$79.32	0.00	
CLASS 303	Class	3L4T8-SP-OS	2455	100%	7	82	NO RETRO	2455	100%	7	82	$0.00	$0.00	0.00	
CLASS 305	Class	3L4T8-SP-OS	2455	100%	12	82	NO RETRO	2455	100%	12	82	$0.00	$0.00	0.00	
RR	Private RR	2L4T8-SP	2250	10%	1	58	NO RETRO	2250	10%	1	58	$0.00	$0.00	0.00	
CLASS 307	Class	3L4T8-SP-OS	2455	100%	12	82	NO RETRO	2455	100%	12	82	$0.00	$0.00	0.00	
RR	Private RR	2L4T8-SP	2250	10%	1	58	NO RETRO	2250	10%	1	58	$0.00	$0.00	0.00	
CLASS 309	Class	3L4T8-SP-OS	2455	100%	11	82	NO RETRO	2455	100%	11	82	$0.00	$0.00	0.00	
RR	Private RR	2L4T8-SP	2250	10%	1	58	NO RETRO	2250	10%	1	58	$0.00	$0.00	0.00	
CLASS 310	Class	3L4T8-SP	2455	100%	4	85	3L4T8-SP-NR-OS	1719	75%	4	85	$0.00	$0.00	0.09	
RR	Private RR	NOTHING	2250	10%	1	0	WSDT	2250	10%	1	0	$114.31	$114.31	0.00	
CLASS 308	Class	3L4T8-SP-OS	2455	100%	15	82	NO RETRO	2455	100%	15	82	$0.00	$0.00	0.00	
RR	Private RR	2L4T8-SP	2250	10%	1	58	NO RETRO	2250	10%	1	58	$0.00	$0.00	0.00	
CLASS 306	Class	3L4T8-SP-OS	2455	100%	12	82	NO RETRO	2455	100%	12	82	$0.00	$0.00	0.00	
RR	Private RR	2L4T8-SP	2250	10%	1	58	NO RETRO	2250	10%	1	58	$0.00	$0.00	0.00	
CLASS 304	Class	3L4T8-SP-OS	2455	100%	12	82	NO RETRO	2455	100%	12	82	$0.00	$0.00	0.00	
RR	Private RR	2L4T8-SP	2250	10%	1	58	NO RETRO	2250	10%	1	58	$0.00	$0.00	0.00	
CLASS 302	Class	3L4T8-SP-OS	2455	100%	12	82	NO RETRO	2455	100%	12	82	$0.00	$0.00	0.00	
CLASS 302	Class	2LU6T8-SP-OS	2455	100%	3	58	NO RETRO	2455	100%	3	58	$0.00	$0.00	0.00	
RR	Private RR	2L4T8-SP	2250	10%	1	58	NO RETRO	2250	10%	1	58	$0.00	$0.00	0.00	
OFFICE 300	Offices, Private	3L4T8-SP	2271	50%	2	85	3L4T8-SP-NR-OS	1590	38%	2	85	$0.00	$0.00	0.02	
OFFICE 300	Offices, Private	NOTHING	2271	50%	1	0	WSIR	2271	50%	1	0	$79.32	$79.32	0.00	
HALL 300	Halls Middle & Elem	3L4T8-SP	3646	100%	10	85	2L4T8-SP-24RFL	3646	100%	10	54	$56.77	$567.70	0.31	1
HALL 300	Halls Middle & Elem	2L26CF	3646	100%	4	54	NO RETRO	3646	100%	4	54	$0.00	$0.00	0.00	
HALL 300	EM/Night	LED EXIT	8766	100%	3	3	NO RETRO	8766	100%	3	3	$0.00	$0.00	0.00	
GYM HALL	Halls Middle & Elem	2L4T8-LP	3646	100%	12	51	NO RETRO	3646	100%	12	51	$0.00	$0.00	0.00	
GYM HALL	EM/Night	LED EXIT	8766	100%	3	3	NO RETRO	8766	100%	3	3	$0.00	$0.00	0.00	
MUSIC HALLWAY	Halls Middle & Elem	4L4T8-LP	3646	100%	11	98	2L4T8-SP-24RFL	3646	100%	11	54	$57.23	$629.49	0.48	1
MUSIC HALLWAY	EM/Night	LED EXIT	8766	100%	2	3	NO RETRO	8766	100%	2	3	$0.00	$0.00	0.00	
MUSIC HALLWAY DISP	Halls Middle & Elem	2L4T8-LP	3646	100%	2	51	N1L4T8-SP-ST	3646	100%	2	28	$102.58	$205.15	0.05	
CENTER HALL	Halls Middle & Elem	2L4T8-LP	3646	100%	7	51	NO RETRO	3646	100%	7	51	$0.00	$0.00	0.00	
CENTER HALL	EM/Night	LED EXIT	8766	100%	2	3	NO RETRO	8766	100%	2	3	$0.00	$0.00	0.00	
HALL 100	Halls Middle & Elem	2L4T8-LP	3646	100%	19	51	NO RETRO	3646	100%	19	51	$0.00	$0.00	0.00	
HALL 100	EM/Night	LED EXIT	8766	100%	4	3	NO RETRO	8766	100%	4	3	$0.00	$0.00	0.00	
3RD GRADE	Class	NOTHING	2455	100%	1	0	WCDT	2455	100%	1	0	$256.93	$256.93	0.00	
KITCHEN	EM/Night	LED EXIT	8766	100%	1	3	NO RETRO	8766	100%	1	3	$0.00	$0.00	0.00	
TOTALS					**737**					**737**			**$27,061.19**	**16.62**	**4(**

* Based on ANSI wattages - to be verified by contractor
** Based on manufacturer's wattages - to be verified by contractor

BUILDING: Grand Lake Elementary
LIGHTING CONTRACTOR: Contractor Name
ELECTRIC CONSUMPTION RATE: $0.07700 per kWh
ELECTRIC DEMAND RATE: $4.35 per kW
HEATING FUEL RATE: $8.290 per MMBtu

ECM 5.1: Lighting system upgrades

		EXISTING					PROPOSED								
AREA	USAGE TYPE	EXISTING FIXTURE DESCRIPTION	ANNUAL HOURS	Demand Div Factor	QTY	WATTS EACH*	RETROFIT DESCRIPTION	ANNUAL HOURS	Demand Div Factor	QTY	WATTS EACH**	UNIT PRICE	TOTAL EXTENDED PRICE	TOTAL KW SAVED	S/ PI
MAIN OFFICE	Common Admin	4L4T8-LP	2271	100%	4	98	2L4T8-SP-24RFL	2271	100%	4	54	$57.23	$228.91	0.18	-
NURSE	Common Admin	4L4T8-LP	2271	100%	3	98	NO RETRO	2271	100%	3	98	$0.00	$0.00	0.00	
RESTROOM	Private RR	2L100IN	2250	10%	1	200	N2L2T8-SP-2'WL	2250	10%	1	32	$147.88	$147.88	0.02	
PRINCIPAL OFFICE	Private RR	4L4T8-LP	2250	10%	4	98	2L4T8-SP-24RFL-OS	1575	8%	4	54	$57.23	$228.91	0.02	
PRINCIPAL OFFICE	Private RR	NOTHING	2250	10%	1	0	WSIR	2250	10%	1	0	$79.32	$79.32	0.00	
FILE ROOM	Common Admin	1L8T8-SP	2271	100%	1	70	1L8T8-SP-NR-OS	1590	75%	1	70	$0.00	$0.00	0.02	
FILE ROOM	Common Admin	NOTHING	2271	100%	1	0	WSIR	2271	100%	1	0	$79.32	$79.32	0.00	
CONFERENCE ROOM	Conference	4L4T8-LP	2271	40%	4	98	4L4T8-LP-NR-OS	2271	30%	4	98	$0.00	$0.00	0.04	
CONFERENCE ROOM	Conference	NOTHING	2271	40%	1	0	WSIR	2271	40%	1	0	$79.32	$79.32	0.00	
WORK ROOM	Common Admin	4L4T8-LP	2271	100%	6	98	2L4T8-SP-24RFL-OS	1590	75%	6	54	$57.23	$343.36	0.35	
WORK ROOM	Common Admin	NOTHING	2271	100%	1	0	WCDT	2271	100%	1	0	$256.93	$256.93	0.00	
ART ROOM	Class	4L4T8-LP	2455	100%	12	98	NO RETRO	1864	100%	12	98	$0.00	$0.00	0.00	
ART ROOM	Class	NOTHING	2455	100%	1	0	WCDT	2455	100%	1	0	$256.93	$256.93	0.00	
CLASS INTERMEDIATE	Class	4L4T8-LP	2455	100%	12	98	2L4T8-SP-24RFL-OS	1719	75%	12	54	$57.23	$686.72	0.69	1
CLASS INTERMEDIATE	Class	NOTHING	2455	100%	1	0	WCDT	2455	100%	1	0	$256.93	$256.93	0.00	
CLASS INTERMEDIATE	Class	4L4T8-LP	2455	100%	12	98	2L4T8-SP-24RFL-OS	1719	75%	12	54	$57.23	$686.72	0.69	1
CLASS INTERMEDIATE	Class	NOTHING	2455	100%	1	0	WCDT	2455	100%	1	0	$256.93	$256.93	0.00	
CLASS 5TH	Class	4L4T8-LP	2455	100%	12	98	2L4T8-SP-24RFL-OS	1719	75%	12	54	$57.23	$686.72	0.69	1
CLASS 5TH	Class	NOTHING	2455	100%	1	0	WCDT	2455	100%	1	0	$256.93	$256.93	0.00	
MEDIA CENTER	Library	4L4T8-LP	2000	90%	10	98	4L4T8-LP-NR-OS	1400	68%	10	98	$0.00	$0.00	0.22	
MEDIA CENTER	Library	2L4T8-SP	2000	90%	2	58	2L4T8-LP-NR-OS	1400	68%	2	51	$0.00	$0.00	0.04	
MEDIA CENTER	Library	NOTHING	2000	90%	1	0	WCDT	2000	90%	1	0	$256.93	$256.93	0.00	
OFFICE / WORK ROOM	Offices, Private	4L4T8-LP	2271	50%	3	98	2L4T8-SP-24RFL	1590	50%	3	54	$57.23	$171.68	0.07	-
COMPUTER LAB	Class	4L4T8-LP	2455	100%	8	98	2L4T8-SP-24RFL-OS	1719	75%	8	54	$57.23	$457.81	0.46	1
COMPUTER LAB	Class	NOTHING	2455	100%	2	0	CIR	2455	100%	2	0	$256.93	$513.87	0.00	
RESOURCE OFFICE	Offices, Private	4L4T8-LP	2271	50%	1	98	2L4T8-SP-24RFL-OS	1590	38%	1	54	$57.23	$57.23	0.03	
RESOURCE OFFICE	Offices, Private	NOTHING	2271	50%	1	0	WSIR	2271	50%	1	0	$79.32	$79.32	0.00	
RESOURCE SUPPLY	Supply	4L4T8-LP	2271	40%	1	98	2L4T8-SP-24RFL-OS	1590	30%	1	54	$57.23	$57.23	0.02	
RESOURCE SUPPLY	Supply	NOTHING	2271	40%	1	0	WSIR	2271	40%	1	0	$79.32	$79.32	0.00	
RESOURCE CLASS	Class	4L4T8-LP	2455	100%	1	98	2L4T8-SP-24RFL-OS	1719	75%	1	54	$57.23	$57.23	0.06	
RESOURCE CLASS	Class	NOTHING	2455	100%	1	0	WSIR	2455	100%	1	0	$79.32	$79.32	0.00	
CUSTODIAL OFFICE	Offices, Private	1L8T8-SP	2271	50%	1	70	1L8T8-SP-NR-OS	1590	38%	1	70	$0.00	$0.00	0.01	
CUSTODIAL OFFICE	Offices, Private	NOTHING	2271	50%	1	0	WSIR	2271	50%	1	0	$79.32	$79.32	0.00	
CLASS PRIMARY	Class	4L4T8-LP	2455	100%	12	98	2L4T8-SP-24RFL-OS	1719	75%	12	54	$57.23	$686.72	0.69	1
CLASS PRIMARY	Class	NOTHING	2455	100%	1	0	WCDT	2455	100%	1	0	$256.93	$256.93	0.00	
CLASS PRIMARY	Class	4L4T8-LP	2455	100%	12	98	2L4T8-SP-24RFL-OS	1719	75%	12	54	$57.23	$686.72	0.69	1
CLASS PRIMARY	Class	NOTHING	2455	100%	1	0	WCDT	2455	100%	1	0	$256.93	$256.93	0.00	
CLASS PRIMARY	Class	4L4T8-LP	2455	100%	12	98	2L4T8-SP-24RFL-OS	1719	75%	12	54	$57.23	$686.72	0.69	1
CLASS PRIMARY	Class	NOTHING	2455	100%	1	0	WCDT	2455	100%	1	0	$256.93	$256.93	0.00	
BOYS RESTROOM	Halls Middle & Elem	2L4T8-LP	3646	100%	2	51	REMOVE	3646	100%	2	0	$18.56	$37.12	0.10	
BOYS RESTROOM	Halls Middle & Elem	NOTHING	3646	100%	1	0	N2L4T8-SP-8'WR	3646	100%	1	54	$161.94	$161.94	-0.05	-
GIRLS RESTROOM	Halls Middle & Elem	2L4T8-LP	3646	100%	1	51	REMOVE	3646	100%	1	0	$18.56	$18.56	0.05	
GIRLS RESTROOM	Halls Middle & Elem	NOTHING	3646	100%	1	0	N1L4T8-HP-4'WR	3646	100%	1	38	$121.87	$121.87	-0.04	-
KINDERGARTEN 109	Class	4L4T8-LP	2455	100%	14	98	2L4T8-SP-24RFL-OS	1719	75%	14	54	$57.23	$801.17	0.81	2
KINDERGARTEN 109	Class	NOTHING	2455	100%	1	0	WCDT	2455	100%	1	0	$256.93	$256.93	0.00	
RRS	Private RR	2L100IN	2250	10%	2	200	N2L2T8-SP-2'WL	2250	10%	2	32	$147.88	$295.75	0.03	
CUSTODIAL	Custodial	1L4T8-SP	2250	30%	1	32	NO RETRO	2250	30%	1	32	$0.00	$0.00	0.00	
MULTI PURPOSE ROOM	Halls Middle & Elem	1L400HID	2523	100%	11	458	N6L4T8-HP-LNS-WG-OS	1766	75%	11	222	$438.15	$4,819.60	3.21	8
MULTI PURPOSE ROOM	Halls Middle & Elem	2L8T8-SP	2523	100%	6	110	REMOVE	2523	100%	6	0	$19.79	$118.76	0.66	1
MULTI PURPOSE ROOM	Halls Middle & Elem	NOTHING	2523	100%	2	0	WCIR	2523	100%	2	0	$256.93	$513.87	0.00	
KITCHEN	Kitchen	2L4T8-LP	800	100%	10	51	NO RETRO	800	100%	10	51	$0.00	$0.00	0.00	
TABLE STORAGE	Storage	2L8T8-SP	2250	20%	2	110	2L8T8-SP-NR-OS	1590	15%	2	110	$0.00	$0.00	0.01	
TABLE STORAGE	Storage	NOTHING	2250	20%	1	0	WSIR	2250	20%	1	0	$79.32	$79.32	0.00	
MECH / MAINT	Mechanical	2L8T8-SP	2250	10%	2	110	2L8T8-SP-NR-OS	1590	8%	2	110	$0.00	$0.00	0.01	
MECH / MAINT	Mechanical	NOTHING	2250	10%	1	0	WSIR	2250	10%	1	0	$79.32	$79.32	0.00	
GYM STORAGE	Storage	2L8T8-SP	2250	20%	2	110	2L8T8-SP-NR-OS	1590	15%	2	110	$0.00	$0.00	0.01	
GYM STORAGE	Storage	NOTHING	2250	20%	1	0	WSIR	2250	20%	1	0	$79.32	$79.32	0.00	
STAGE / MUSIC CLASS	Class	4L4T8-LP	2455	100%	13	98	2L4T8-SP-24RFL-OS	1719	75%	13	54	$57.23	$743.95	0.75	1
STAGE / MUSIC CLASS	Class	NOTHING	2455	100%	1	0	WCIR	2455	100%	1	0	$256.93	$256.93	0.00	
STAGE CORRIDOR	Halls Middle & Elem	4L4T8-SP	3646	100%	3	112	2L4T8-SP-24RFL	3646	100%	3	54	$57.23	$171.68	0.17	
BOYS RESTROOM	Halls Middle & Elem	2L4T8-LP	3646	100%	2	51	REMOVE	3646	100%	2	0	$18.56	$37.12	0.10	
BOYS RESTROOM	Halls Middle & Elem	NOTHING	3646	100%	1	0	N2L4T8-SP-8'WR	3646	100%	1	54	$161.94	$161.94	-0.05	-
GIRLS RESTROOM	Halls Middle & Elem	2L4T8-LP	3646	100%	1	51	REMOVE	3646	100%	1	0	$18.56	$18.56	0.05	
GIRLS RESTROOM	Halls Middle & Elem	NOTHING	3646	100%	1	0	N1L4T8-HP-4'WR	3646	100%	1	38	$121.87	$121.87	-0.04	-
CENTER HALLS	Halls Middle & Elem	4L4T8-LP	3646	100%	26	98	2L4T8-SP-24RFL	3646	100%	26	54	$57.23	$1,487.89	1.14	4
CENTER HALLS	EM/Night	LED EXIT	8766	100%	7	3	NO RETRO	8766	100%	7	3	$0.00	$0.00	0.00	
TOTALS					**268**					**268**			**$19,635.58**	**12.58**	**30**

* Based on ANSI wattages - to be verified by contractor
** Based on manufacturer's wattages - to be verified by contractor

BUILDING: Indian Peaks Charter School
LIGHTING CONTRACTOR: Contractor Name
ELECTRIC CONSUMPTION RATE: $0.08700 per kWh
ELECTRIC DEMAND RATE: $0.00 per kW
HEATING FUEL RATE: $10.090 per MMBtu

ECM 5.1: Lighting system upgrades

		EXISTING					PROPOSED								
AREA	USAGE TYPE	EXISTING FIXTURE DESCRIPTION	ANNUAL HOURS	Demand Div Factor	QTY	WATTS EACH*	RETROFIT DESCRIPTION	ANNUAL HOURS	Demand Div Factor	QTY	WATTS EACH**	UNIT PRICE	TOTAL EXTENDED PRICE	TOTAL KW SAVED	I S/ PI
LUNCH ROOM	Kitchen	2L4T8-SP-24RFL	1600	100%	12	112	2L4T8-SP-24RFL	1600	100%	12	54	$56.31	$675.76	0.70	1
LUNCH ROOM	EM/Night	NO RETRO	8766	100%	2	3	NO RETRO	8766	100%	2	3	$0.00	$0.00	0.00	
KITCHEN	Kitchen	NO RETRO	1600	100%	6	112	NO RETRO	1600	100%	6	112	$0.00	$0.00	0.00	
MAIN OFFICE	Common Admin	NO RETRO	1600	100%	2	112	NO RETRO	1600	100%	2	112	$0.00	$0.00	0.00	
CONFERENCE ROOM	Conference	NO RETRO	1600	40%	1	112	NO RETRO	1600	40%	1	112	$0.00	$0.00	0.00	
SICK ROOM	Offices, Private	NO RETRO	1600	50%	1	112	NO RETRO	1600	50%	1	112	$0.00	$0.00	0.00	
KINDERGARTEN	Class	2L4T8-SP-24RFL	1600	100%	11	112	2L4T8-SP-24RFL	1600	100%	11	54	$56.31	$619.45	0.64	1
KINDERGARTEN	EM/Night	NO RETRO	8766	100%	1	3	NO RETRO	8766	100%	1	3	$0.00	$0.00	0.00	
1ST & 2ND GRADE	Class	2L4T8-SP-24RFL	1600	100%	12	112	2L4T8-SP-24RFL	1600	100%	12	54	$56.31	$675.76	0.70	1
1ST & 2ND GRADE	EM/Night	NO RETRO	8766	100%	1	3	NO RETRO	8766	100%	1	3	$0.00	$0.00	0.00	
RESTROOMS	Halls Middle & Elem	2L4T8-SP-24RFL	1600	100%	4	112	2L4T8-SP-24RFL	1600	100%	4	54	$56.31	$225.25	0.23	
FOREIGN LANGUAGE	Class	2L4T8-SP-24RFL	1600	100%	6	112	2L4T8-SP-24RFL	1600	100%	6	54	$56.31	$337.88	0.35	
HALLS	Halls Middle & Elem	2L4T8-SP-24RFL	1600	100%	5	112	2L4T8-SP-24RFL	1600	100%	5	54	$56.31	$281.57	0.29	
HALLS	EM/Night	NO RETRO	8766	100%	2	3	NO RETRO	8766	100%	2	3	$0.00	$0.00	0.00	
LIBRARY (WEST MOD)	Class	2L4T8-SP-24RFL	1600	100%	5	144	2L4T8-SP-24RFL	1600	100%	5	54	$56.31	$281.57	0.45	
LIBRARY	EM/Night	NO RETRO	8766	100%	1	3	NO RETRO	8766	100%	1	3	$0.00	$0.00	0.00	
3RD & 4TH GRADE	Class	2L4T8-SP-24RFL	1600	100%	6	144	2L4T8-SP-24RFL	1600	100%	6	54	$56.31	$337.88	0.54	
SPECIAL ED	Class	2L4T8-SP-24RFL	1600	100%	2	144	2L4T8-SP-24RFL	1600	100%	2	54	$56.31	$112.63	0.18	
GIRLS RESTROOM	Halls Middle & Elem	2L4T8-SP-24RFL	1600	100%	1	144	2L4T8-SP-24RFL	1600	100%	1	54	$56.31	$56.31	0.09	
BOYS RESTROOM	Halls Middle & Elem	NO RETRO	1600	100%	1	58	NO RETRO	1600	100%	1	58	$0.00	$0.00	0.00	
CORRIDOR	Halls Middle & Elem	2L4T8-SP-24RFL	1600	100%	2	144	2L4T8-SP-24RFL	1600	100%	2	54	$56.31	$112.63	0.18	
HALL (EAST MOD)	Halls Middle & Elem	NO RETRO	1600	100%	3	58	NO RETRO	1600	100%	3	58	$0.00	$0.00	0.00	
7TH & 8TH GRADE	Class	NO RETRO	1600	100%	8	58	NO RETRO	1600	100%	8	58	$0.00	$0.00	0.00	
FILE ROOM	Storage	NO RETRO	1600	20%	1	58	NO RETRO	1600	20%	1	58	$0.00	$0.00	0.00	
5TH & 6TH GRADE	Class	NO RETRO	1600	100%	12	58	NO RETRO	1600	100%	12	58	$0.00	$0.00	0.00	
5TH & 6TH GRADE	EM/Night	NO RETRO	8766	100%	1	3	NO RETRO	8766	100%	1	3	$0.00	$0.00	0.00	
TOTALS					**109**					**109**			**$3,716.69**	**4.34**	**6**

* Based on ANSI wattages - to be verified by contractor
** Based on manufacturer's wattages - to be verified by contractor

BUILDING: District Office
LIGHTING CONTRACTOR: Contractor Name
ELECTRIC CONSUMPTION RATE: $0.08700 per kWh
ELECTRIC DEMAND RATE: $0.00 per kW
HEATING FUEL RATE: $9.710 per MMBtu

ECM 5.1: Lighting system upgrades

		EXISTING					PROPOSED								
AREA	USAGE TYPE	EXISTING FIXTURE DESCRIPTION	ANNUAL HOURS	Demand Div Factor	QTY	WATTS EACH*	RETROFIT DESCRIPTION	ANNUAL HOURS	Demand Div Factor	QTY	WATTS EACH**	UNIT PRICE	TOTAL EXTENDED PRICE	TOTAL KW SAVED	S/ PI
CONFERENCE ROOM	Conference	4L4T8-LP	2000	40%	6	98	2L4T8-SP-24RFL	2000	40%	6	54	$57.23	$343.36	0.11	
CHAIMBERLIN OFFICE	Offices Admin	4L4T8-LP	2000	90%	2	98	NO RETRO	2000	90%	2	98	$0.00	$0.00	0.00	
LUND OFFICE	Offices Admin	4L4T8-LP	2000	90%	1	98	NO RETRO	2000	90%	1	98	$0.00	$0.00	0.00	
WENINGER OFFICE	Offices Admin	4L4T8-LP	2000	90%	2	98	NO RETRO	2000	90%	2	98	$0.00	$0.00	0.00	
OFFICE	Offices Admin	4L4T8-LP	2000	90%	2	98	NO RETRO	2000	90%	2	98	$0.00	$0.00	0.00	
BREAK ROOM	Offices Admin	4L4T8-LP	2000	90%	4	98	2L4T8-SP-24RFL	2000	90%	4	54	$57.23	$228.91	0.16	
SCHMIEDBAUER OFFICE	Offices Admin	4L4T8-LP	2000	90%	4	98	2L4T8-SP-24RFL	2000	90%	4	54	$57.23	$228.91	0.16	
KNOX OFFICE	Offices Admin	4L4T8-LP	2000	90%	2	98	NO RETRO	2000	90%	2	98	$0.00	$0.00	0.00	
WORK ROOM	Offices Admin	4L4T8-LP	2000	90%	2	98	NO RETRO	2000	90%	2	98	$0.00	$0.00	0.00	
SUPERINTENDANT OFFICE	Offices Admin	4L4T8-LP	2000	90%	4	98	2L4T8-SP-24RFL	2000	90%	4	54	$57.23	$228.91	0.16	
CUSTODIAL	Custodial	1L100IN	2000	30%	1	100	1L25CF	2000	30%	1	25	$14.77	$14.77	0.02	
COMMON AREA	Offices Admin	4L4T8-LP	2000	90%	15	98	2L4T8-SP-24RFL	2000	90%	15	54	$57.23	$858.40	0.59	1
COMMON AREA	Offices Admin	1L15CF-R30	2000	90%	6	15	NO RETRO	2000	90%	6	15	$0.00	$0.00	0.00	
COMMON AREA	EM/Night	LED EXIT	8766	100%	1	3	NO RETRO	8766	100%	1	3	$0.00	$0.00	0.00	
BOARD ROOM	Conference	4L4T8-LP	120	40%	15	98	NO RETRO	120	40%	15	98	$0.00	$0.00	0.00	
CORRIDOR	Conference	4L4T8-LP	760	40%	2	98	2L4T8-SP-24RFL	760	40%	2	54	$57.23	$114.45	0.04	
MENS RESTROOM	Common RR	2L4T8-LP	760	100%	1	51	NO RETRO	760	100%	1	51	$0.00	$0.00	0.00	
MENS RESTROOM	Common RR	2L2T12	760	100%	1	49	2L2T8-LP	760	100%	1	28	$36.24	$36.24	0.02	
WOMENS RESTROOM	Common RR	2L4T8-LP	760	100%	1	51	NO RETRO	760	100%	1	51	$0.00	$0.00	0.00	
WOMENS RESTROOM	Common RR	2L4T8-LP	760	100%	1	51	NO RETRO	760	100%	1	51	$0.00	$0.00	0.00	
FILE STORAGE	Storage	4L4T8-LP	2000	20%	6	98	NO RETRO	2000	20%	6	98	$0.00	$0.00	0.00	
MAINT SHOP	Offices Admin	4L4T8-LP	2200	90%	2	98	NO RETRO	2200	90%	2	98	$0.00	$0.00	0.00	
MAINT OFFICE	Offices Admin	4L4T8-LP	2200	90%	4	98	2L4T8-SP-24RFL-OS	2200	68%	4	54	$57.23	$228.91	0.21	
MAINT OFFICE	Offices Admin	NOTHING	2200	90%	1	0	WSDT	2200	90%	1	0	$114.31	$114.31	0.00	
WAREHOUSE	Warehouse	1L400HID	2200	100%	10	458	N6L4T8-HP-8'IND-OS	1540	75%	10	222	$191.39	$1,913.93	2.92	6
WAREHOUSE	Warehouse	NOTHING	2200	100%	10	0	FIXT MOUNT IR SENSOR	2200	100%	10	0	$137.24	$1,372.38	0.00	
WAREHOUSE	EM/Night	LED EXIT	8766	100%	2	3	NO RETRO	8766	100%	2	3	$0.00	$0.00	0.00	
MEZZANINE STORAGE	Storage	2L8T8-SP	760	20%	4	110	NO RETRO	760	20%	4	110	$0.00	$0.00	0.00	
TOTALS					**112**					**112**			**$5,683.46**	**4.38**	**1**

* Based on ANSI wattages - to be verified by contractor
** Based on manufacturer's wattages - to be verified by contractor

BUILDING: Transportation Facility
LIGHTING CONTRACTOR: Contractor Name
ELECTRIC CONSUMPTION RATE: $0.08700 per kWh
ELECTRIC DEMAND RATE: $0.00 per kW
HEATING FUEL RATE: $8.290 per MMBtu

ECM 5.1: Lighting system upgrades

		EXISTING					PROPOSED								
AREA	USAGE TYPE	EXISTING FIXTURE DESCRIPTION	ANNUAL HOURS	Demand Div Factor	QTY	WATTS EACH*	RETROFIT DESCRIPTION	ANNUAL HOURS	Demand Div Factor	QTY	WATTS EACH**	UNIT PRICE	TOTAL EXTENDED PRICE	TOTAL KW SAVED	K S/ PI
ENTRY VESTIBULE	Halls Middle & Elem	2L42CF	2200	100%	1	84	2L42CF-NR-OS-PC	770	38%	1	84	$0.00	$0.00	0.05	
ENTRY VESTIBULE	Halls Middle & Elem	NOTHING	2200	100%	1	0	WSIR-PC	1100	50%	1	0	$79.32	$79.32	0.00	
DRIVER LOUNGE	Common Admin	2L4T8-SP	2200	100%	4	58	2L4T8-SP-NR-OS	1540	75%	4	58	$0.00	$0.00	0.06	
DRIVER LOUNGE	Common Admin	NOTHING	2200	100%	1	0	CDT	2200	100%	1	0	$256.93	$256.93	0.00	
DRIVER LOUNGE	EM/Night	2L4T8-SP-EM	8766	100%	1	58	NO RETRO	8766	100%	1	58	$0.00	$0.00	0.00	
RRS	Private RR	2L4T8-SP	540	10%	2	58	2L4T8-SP-NR-OS	378	8%	2	58	$0.00	$0.00	0.00	
RRS	Private RR	NOTHING	540	10%	2	0	WSIR	540	10%	2	0	$79.32	$158.65	0.00	
SHOWER	Private RR	1L42CF	540	10%	1	42	NO RETRO	540	10%	1	42	$0.00	$0.00	0.00	
BUS GARAGE	Common Admin	4L4T8-SP	2200	100%	34	112	4L4T8-SP-NR-OS	1540	75%	34	112	$0.00	$0.00	0.95	2
BUS GARAGE	Common Admin	2L4T8-SP	2200	100%	6	58	2L4T8-SP-NR-OS	1540	75%	6	58	$0.00	$0.00	0.09	
BUS GARAGE	EM/Night	4L4T8-SP-EM	8766	100%	2	112	NO RETRO	8766	100%	2	112	$0.00	$0.00	0.00	
BUS GARAGE	EM/Night	2L4T8-SP-EM	8766	100%	6	58	NO RETRO	8766	100%	6	58	$0.00	$0.00	0.00	
BUS GARAGE	Common Admin	NOTHING	2200	100%	6	0	WCIR	2200	100%	6	0	$256.93	$1,541.60	0.00	
BUS GARAGE	EM/Night	LED EXIT	8766	100%	4	3	NO RETRO	8766	100%	4	3	$0.00	$0.00	0.00	
SMALL SERVICE BAY	Common Admin	1L350HID-LR	2200	100%	4	375	N6L4T8-HP-8'IND-OS	1540	75%	4	222	$191.39	$765.57	0.83	1
SMALL SERVICE BAY	Common Admin	NOTHING	2200	100%	2	0	WCDT	2200	100%	2	0	$256.93	$513.87	0.00	
SMALL SERVICE BAY	EM/Night	LED EXIT	8766	100%	1	3	NO RETRO	8766	100%	1	3	$0.00	$0.00	0.00	
BIG SERVICE BAY	Common Admin	1L350HID-LR	2200	100%	9	375	N6L4T8-HP-8'IND-OS	1540	75%	9	222	$191.39	$1,722.53	1.88	4
BIG SERVICE BAY	Common Admin	NOTHING	2200	100%	4	0	WCDT	2200	100%	4	0	$256.93	$1,027.73	0.00	
BIG SERVICE BAY	EM/Night	LED EXIT	8766	100%	1	3	NO RETRO	8766	100%	1	3	$0.00	$0.00	0.00	
SHOP OFFICE	Offices, Private	3L4T8-SP	2200	50%	2	85	3L4T8-SP-NR-OS	1540	38%	2	85	$0.00	$0.00	0.02	
SHOP OFFICE	Offices, Private	NOTHING	2200	50%	1	0	WSDT	2200	50%	1	0	$114.31	$114.31	0.00	
PARTS ROOM	Common Admin	4L4T8-SP	2200	100%	4	112	4L4T8-SP-NR-OS	1540	75%	4	112	$0.00	$0.00	0.11	
PARTS ROOM	Common Admin	NOTHING	2200	100%	1	0	WSDT	1540	100%	1	0	$114.31	$114.31	0.00	
MEZZANINE CLASS	Storage	4L4T8-SP	540	20%	8	112	NO RETRO	540	20%	8	112	$0.00	$0.00	0.00	
WASH BAY	Common Admin	4L4T8-SP	2200	100%	8	112	4L4T8-SP-NR-OS	1540	75%	8	112	$0.00	$0.00	0.22	
WASH BAY	Common Admin	NOTHING	2200	100%	2	0	WET LOC IR	2200	100%	2	0	$270.93	$541.86	0.00	
TOTALS					**118**					**118**			**$6,836.69**	**4.22**	**1(**

* Based on ANSI wattages - to be verified by contractor
** Based on manufacturer's wattages - to be verified by contractor

BUILDING: Middle Park High School
LIGHTING CONTRACTOR: Contractor Name
ELECTRIC CONSUMPTION RATE: $0.05900 per kWh
ELECTRIC DEMAND RATE: $4.35 per kW
HEATING FUEL RATE: $8.290 per MMBtu

ECM 5.1: Lighting system upgrades

		EXISTING					PROPOSED								
AREA	USAGE TYPE	EXISTING FIXTURE DESCRIPTION	ANNUAL HOURS	Demand Div Factor	QTY	WATTS EACH*	RETROFIT DESCRIPTION	ANNUAL HOURS	Demand Div Factor	QTY	WATTS EACH**	UNIT PRICE	TOTAL EXTENDED PRICE	TOTAL KW SAVED	KWH SAVED PER YR
ENTRY VESTIBULE	Halls High School	1L42CF	4163	100%	2	42	NO RETRO	4163	100%	2	42	$0.00	$0.00	0.00	0
MAIN OFFICE	Common Admin	2L4T8-SP	2250	100%	4	58	NO RETRO	2250	100%	4	58	$0.00	$0.00	0.00	0
MAIN OFFICE	Common Admin	2L4T8-SP	2250	100%	1	58	2L4T8-SP-PCDIM	1875	50%	1	58	$91.41	$91.41	0.03	22
MAIN OFFICE	Common Admin	3L4T8-SP	2250	100%	2	85	NO RETRO	2250	100%	2	85	$0.00	$0.00	0.00	0
MAIN OFFICE	Common Admin	3L4T8-SP	2250	100%	2	85	3L4T8-SP-PCDIM	1875	50%	2	96	$154.61	$309.23	0.07	23
COPY AREA	Common Admin	2L4T8-SP	2250	100%	2	58	NO RETRO	2250	100%	2	58	$0.00	$0.00	0.00	0
COPY AREA	Common Admin	3L4T8-SP	2250	100%	1	85	NO RETRO	2250	100%	1	85	$0.00	$0.00	0.00	0
CONFERENCE ROOM	Conference	3L4T8-SP-DUAL	2250	40%	3	90	3L4T8-SP-DUAL-NR-OS	1575	30%	3	90	$0.00	$0.00	0.03	182
CONFERENCE ROOM	Conference	NOTHING	2250	40%	1	0	WSIR	2250	40%	1	0	$79.32	$79.32	0.00	0
PRINCIPAL OFFICE 101B	Offices, Private	3L4T8-SP-DUAL	2250	50%	4	90	3L4T8-SP-DUAL-NR-OS	1575	38%	4	90	$0.00	$0.00	0.05	243
PRINCIPAL OFFICE 101B	Offices, Private	NOTHING	2250	50%	1	0	WSDT	2250	50%	1	0	$114.31	$114.31	0.00	0
ASST PRINCIPAL 101C	Offices, Private	3L4T8-SP-DUAL	2250	50%	3	90	3L4T8-SP-DUAL-NR-OS	1008	38%	3	90	$0.00	$0.00	0.03	335
ASST PRINCIPAL 101C	Offices, Private	NOTHING	2250	50%	1	0	WSDT	1575	50%	1	0	$114.31	$114.31	0.00	0
ELECTRIC ROOM	Mechanical	4L4T8-SP	2250	10%	1	112	NO RETRO	2250	10%	1	112	$0.00	$0.00	0.00	0
RESTROOM	Private RR	1L42CF	2250	10%	2	42	1L42CF-NR-OS	1575	8%	2	42	$0.00	$0.00	0.00	57
RESTROOM	Private RR	NOTHING	2250	10%	1	0	WSIR	2250	10%	1	0	$79.32	$79.32	0.00	0
NUTRITION 103	Kitchen	3L4T8-SP	1000	90%	4	85	NO RETRO	1000	90%	4	85	$0.00	$0.00	0.00	0
CONCESSION 105	Storage	3L4T8-SP	1000	20%	2	85	NO RETRO	1000	20%	2	85	$0.00	$0.00	0.00	0
RRS	Private RR	1L42CF	1000	10%	3	42	NO RETRO	1000	10%	3	42	$0.00	$0.00	0.00	0
MENS RR	Halls High School	3L4T8-SP	4163	100%	3	85	NO RETRO	4163	100%	3	85	$0.00	$0.00	0.00	0
WOMENS RR	Halls High School	3L4T8-SP	4163	100%	6	85	NO RETRO	4163	100%	6	85	$0.00	$0.00	0.00	0
SOUTH GYM	Gym	8L42CF	2733	100%	45	372	8L42CF-NR-OS	1913	75%	45	372	$0.00	$0.00	4.19	13,725
SOUTH GYM	Gym	NOTHING	2733	100%	4	0	WCIR	2733	100%	4	0	$316.78	$1,267.12	0.00	0
SOUTH GYM	EM/Night	LED EXIT	8766	100%	3	3	NO RETRO	8766	100%	3	3	$0.00	$0.00	0.00	0
GYM STORAGE 607	Storage	4L4T8-SP	2250	20%	1	112	4L4T8-SP-NR-OS	1575	15%	1	112	$0.00	$0.00	0.01	76
GYM STORAGE 607	Storage	NOTHING	2250	20%	1	0	WSIR	2250	20%	1	0	$79.32	$79.32	0.00	0
GYM STOR/OFFICE 609	Offices, Private	4L4T8-SP	2250	50%	2	112	4L4T8-SP-NR-OS	1575	38%	2	112	$0.00	$0.00	0.03	151
GYM STOR/OFFICE 609	Offices, Private	NOTHING	2250	50%	1	0	WSDT	2250	50%	1	0	$114.31	$114.31	0.00	0
LOCKER ENTRY	Gym	1L42CF	2733	100%	4	42	NO RETRO	2733	100%	4	42	$0.00	$0.00	0.00	0
WOMENS LOCKERS	Gym	3L4T8-SP	2733	100%	9	85	NO RETRO	2733	100%	9	85	$0.00	$0.00	0.00	0
WOMENS LOCKERS	EM/Night	3L4T8-SP-EM	8766	100%	1	82	NO RETRO	8766	100%	1	82	$0.00	$0.00	0.00	0
WOMENS LOCKERS	EM/Night	LED EXIT	8766	100%	2	3	NO RETRO	8766	100%	2	3	$0.00	$0.00	0.00	0
WOMENS LOCKERS	Gym	1L42CF	2733	100%	2	42	NO RETRO	2733	100%	2	42	$0.00	$0.00	0.00	0
CUST / STOR	Storage	2L23CF	2250	20%	1	46	NO RETRO	2250	20%	1	46	$0.00	$0.00	0.00	0
MENS LOCKERS	Gym	3L4T8-SP	2733	100%	9	85	NO RETRO	2733	100%	9	85	$0.00	$0.00	0.00	0
MENS LOCKERS	EM/Night	3L4T8-SP-EM	8766	100%	1	82	NO RETRO	8766	100%	1	82	$0.00	$0.00	0.00	0
MENS LOCKERS	EM/Night	LED EXIT	8766	100%	2	3	NO RETRO	8766	100%	2	3	$0.00	$0.00	0.00	0
MENS LOCKERS	Gym	1L42CF	2733	100%	2	42	NO RETRO	2733	100%	2	42	$0.00	$0.00	0.00	0
CUST / STOR	Storage	2L23CF	2250	20%	1	46	NO RETRO	2250	20%	1	46	$0.00	$0.00	0.00	0
WEIGHT ROOM 611	Class	3L4T8-SP-OS	1987	100%	17	82	NO RETRO	1987	100%	17	82	$0.00	$0.00	0.00	0
WEIGHT ROOM 611	EM/Night	LED EXIT	8766	100%	1	3	NO RETRO	8766	100%	1	3	$0.00	$0.00	0.00	0
MECH 611A	Mechanical	4L4T8-SP	2250	10%	2	112	NO RETRO	2250	10%	2	112	$0.00	$0.00	0.00	0
OLD GYM	Gym	1L400HID	2733	100%	29	458	N6L4T8-HP-LNS-WG-OS	1913	75%	29	222	$438.15	$12,706.23	8.45	23,983
OLD GYM	Gym	NOTHING	2733	100%	4	0	WCIR	2733	100%	4	0	$316.78	$1,267.12	0.00	0
OLD GYM	EM/Night	LED EXIT	8766	100%	2	3	NO RETRO	8766	100%	2	3	$0.00	$0.00	0.00	0
GYM STORAGE 604A	Storage	3L4T12-EB-40W	2250	20%	4	105	2L4T8-SP-DLMP-OS	1575	15%	4	54	$35.47	$141.90	0.05	605
GYM STORAGE 604A	Storage	NOTHING	2250	20%	1	0	WSIR	2250	20%	1	0	$79.32	$79.32	0.00	0
GYM STORAGE MEZZ	Storage	2L8T8-SP	2250	20%	3	110	NO RETRO	2250	20%	3	110	$0.00	$0.00	0.00	0
WRESTLING ROOM 614	Class	2L8T8-SP	1987	100%	24	110	2L8T8-SP-NR-OS	1391	75%	24	110	$0.00	$0.00	0.66	1,573
WRESTLING ROOM 614	Class	NOTHING	1987	100%	2	0	WCIR	1987	100%	2	0	$256.93	$513.87	0.00	0
WRESTLING ROOM 614	EM/Night	LED EXIT	8766	100%	1	3	NO RETRO	8766	100%	1	3	$0.00	$0.00	0.00	0
GYM CORRIDOR	Halls High School	2L4T12-EB-40W	4163	100%	3	68	2L4T8-LP	4163	100%	3	48	$33.58	$100.74	0.06	250
GYM CORRIDOR	EM/Night	2L4T12-EB-40W-EM	8766	100%	1	68	2L4T8-LP-EM	8766	100%	1	48	$129.02	$129.02	0.02	175
GYM CORRIDOR	EM/Night	3L4T8-SP-EM	8766	100%	1	82	NO RETRO	8766	100%	1	82	$0.00	$0.00	0.00	0
GYM CORR VEST	Halls High School	2L13CF	4163	100%	1	26	NO RETRO	4163	100%	1	26	$0.00	$0.00	0.00	0
CLASS 618	Class	3L4T8-SP-DUAL	1987	100%	15	90	3L4T8-SP-DUAL-NR-OS	1391	75%	15	90	$0.00	$0.00	0.34	805
CLASS 618	Class	NOTHING	1987	100%	1	0	WCDT	1987	100%	1	0	$256.93	$256.93	0.00	0
TRAINING ROOM 616	Class	1L175HID	1987	100%	3	210	N4L4T8-HP-8TND-OS	1391	75%	3	151	$169.84	$509.52	0.29	622
TRAINING ROOM 616	Class	1L400HID	1987	100%	2	458	N4L4T8-HP-8TND-OS	1391	75%	2	151	$169.84	$339.68	0.69	1,400
TRAINING ROOM 618	Class	NOTHING	1987	100%	1	0	WCDT	1987	100%	1	0	$256.93	$256.93	0.00	0
TREATMENT 616A	Class	3L4T8-SP	1987	100%	2	85	3L4T8-SP-NR-OS	1391	75%	2	85	$0.00	$0.00	0.04	101
TREATMENT 616A	Class	NOTHING	1987	100%	1	0	WSIR	1987	100%	1	0	$79.32	$79.32	0.00	0
MENS LOCKER 612	Gym	2L4T12-EB-40W	2733	100%	10	68	2L4T8-LP-TG	2733	100%	10	48	$33.58	$335.81	0.20	547
MENS SHOWER	Gym	1L100IN	2733	100%	3	100	1L15CF	2733	100%	3	15	$13.16	$39.48	0.26	697
MENS COACH LKR 610	Offices, Private	2L4T12-EB-40W	2250	50%	1	68	2L4T8-LP-TG	2250	50%	1	48	$33.58	$33.58	0.01	45
MENS COACH OFF 608	Offices, Private	2L4T12-EB-40W	2250	50%	4	68	2L4T8-SP-OS	1575	38%	4	54	$33.58	$134.32	0.06	272
MENS COACH OFF 608	Offices, Private	NOTHING	2250	50%	1	0	WSIR	2250	50%	1	0	$79.32	$79.32	0.00	0
WOMENS COACH 606	Offices, Private	4L4T12-EB-40W	2250	50%	2	136	4L4T8-LP-OS	1575	38%	2	97	$45.11	$90.22	0.06	306
WOMENS COACH 606	Offices, Private	NOTHING	2250	50%	1	0	WSIR	2250	50%	1	0	$79.32	$79.32	0.00	0
WOMENS LOCKER 604	Gym	2L4T12-EB-40W	2733	100%	10	68	2L4T8-LP-TG	2733	100%	10	48	$33.58	$335.81	0.20	547
WOMENS SHOWER	Gym	1L100IN	2733	100%	3	100	1L15CF	2733	100%	3	15	$13.16	$39.48	0.26	697
WOMENS COACH LKR	Offices, Private	2L4T12-EB-40W	2250	50%	1	68	2L4T8-LP-TG	2250	50%	1	48	$33.58	$33.58	0.01	45
CUSTODIAL 502	Custodial	1L4T12-40W	2250	30%	1	43	1L4T8-SP	2250	30%	1	28	$31.45	$31.45	0.00	34
LAUNDRY 504	Custodial	1L4T12-40W	2250	30%	1	43	1L4T8-SP	2250	30%	1	28	$31.45	$31.45	0.00	34
CORR VEST	Halls High School	2L13CF	4163	100%	1	26	NO RETRO	4163	100%	1	26	$0.00	$0.00	0.00	0
ART CLASS 507	Class	2L8T8-SP	1987	100%	13	110	2L8T8-SP-NR-OS	1391	75%	13	110	$0.00	$0.00	0.36	852
ART CLASS 507	Class	2L4T12-EB-40W	1987	100%	6	68	2L4T8-SP-OS	1391	75%	6	54	$33.58	$201.49	0.17	360
ART CLASS 507	Class	NOTHING	1987	100%	1	0	WCDT	1987	100%	1	0	$256.93	$256.93	0.00	0
ART OFFICE	Offices, Private	2L4T12-EB-40W	2250	50%	2	68	2L4T8-SP-OS	1575	38%	2	54	$33.58	$67.16	0.03	136
ART OFFICE	Offices, Private	NOTHING	2250	50%	1	0	WSIR	2250	50%	1	0	$79.32	$79.32	0.00	0
ART STORAGE A	Storage	1L8T8-SP	2250	20%	1	70	1L8T8-SP-NR-OS	1575	15%	1	70	$0.00	$0.00	0.00	47
ART STORAGE A	Storage	NOTHING	2250	20%	1	0	WSIR	2250	20%	1	0	$79.32	$79.32	0.00	0
ART STORAGE B	Storage	1L8T8-SP	2250	20%	1	70	1L8T8-SP-NR-OS	1575	15%	1	70	$0.00	$0.00	0.00	47

ART STORAGE B	Storage	NOTHING	2250	20%	1	0	WSIR	2250	20%	1	0	$79.32	$79.32	0.00	0
ART DARK ROOM	Class	2L4T12-EB-40W	1987	100%	6	68	2L4T8-LP	1987	100%	6	48	$33.58	$201.49	0.12	238
ART RR	Private RR	2L100IN	2250	10%	1	200	N1L4T8-SP-4'WL	2250	10%	1	28	$121.87	$121.87	0.02	387
WELDING CLASS 505	Class	2L8T8-SP	1987	100%	14	110	NO RETRO	1987	100%	14	110	$0.00	$0.00	0.00	0
WELDING CLASS 505	Class	2L4T12-EB-40W	1987	100%	3	68	2L4T8-LP	1987	100%	3	48	$33.58	$100.74	0.06	119
WELDING CLASS 505	EM/Night	2L15EX	8766	100%	1	30	NLEDEX-G-B	8766	100%	1	3	$59.26	$59.26	0.03	237
WELDING OFFICE	Offices, Private	2L4T12-EB-40W	2250	50%	1	68	2L4T8-SP-OS	1575	38%	1	54	$33.58	$33.58	0.01	68
WELDING OFFICE	Offices, Private	NOTHING	2250	50%	1	0	WSIR	2250	50%	1	0	$79.32	$79.32	0.00	0
WELDING TOOL ROOM	Class	2L4T12-EB-40W	1987	100%	1	68	2L4T8-SP-OS	1391	75%	1	54	$33.58	$33.58	0.03	60
WELDING PROJECT RM	Class	2L8T8-SP	1987	100%	1	110	2L8T8-SP-NR-OS	1391	75%	1	110	$0.00	$0.00	0.03	66
DRAFTING 503	Class	2L4T12-EB-40W	1987	100%	13	68	2L4T8-SP-OS	1391	75%	13	54	$33.58	$436.55	0.36	780
DRAFTING 503	Class	NOTHING	1987	100%	1	0	WCDT	1987	100%	1	0	$256.93	$256.93	0.00	0
WOOD CLASS 513	Class	2L8T8-SP	1987	100%	19	110	NO RETRO	1987	100%	19	110	$0.00	$0.00	0.00	0
WOOD CLASS 513	EM/Night	2L15EX	8766	100%	1	30	NLEDEX-G-B	8766	100%	1	3	$59.26	$59.26	0.03	237
WOOD OFFICE	Offices, Private	2L4T12-EB-40W	2250	50%	1	68	2L4T8-SP-OS	1575	38%	1	54	$33.58	$33.58	0.01	68
WOOD OFFICE	Offices, Private	NOTHING	2250	50%	1	0	WSIR	2250	50%	1	0	$79.32	$79.32	0.00	0
WOOD PROJECT RM	Class	2L8T8-SP	1987	100%	2	110	NO RETRO	1987	100%	2	110	$0.00	$0.00	0.00	0
WOOD STORAGE	Class	1L8T8-SP	1987	100%	1	70	NO RETRO	1987	100%	1	70	$0.00	$0.00	0.00	0
WOOD TOOL ROOM	Class	1L4T12-40W	1987	100%	2	43	1L4T8-LP	1987	100%	2	25	$31.45	$62.89	0.04	72
WOOD FINISHING	Class	2L4T12-EB-40W	1987	100%	1	68	2L4T8-SP	1987	100%	1	54	$33.58	$33.58	0.01	28
MENS RESTROOM	Halls High School	2L4T12-EB-40W	4163	100%	6	68	REMOVE	4163	100%	6	0	$19.68	$118.07	0.41	1,699
MENS RESTROOM	Halls High School	NOTHING	4163	100%	3	0	N2L4T8-SP-8'WR	4163	100%	3	54	$161.94	$485.82	-0.16	-674
WOMENS RESTROOM	Halls High School	2L4T12-EB-40W	4163	100%	6	68	REMOVE	4163	100%	6	0	$19.68	$118.07	0.41	1,699
WOMENS RESTROOM	Halls High School	NOTHING	4163	100%	3	0	N2L4T8-SP-8'WR	4163	100%	3	54	$161.94	$485.82	-0.16	-674
KITCHEN	Kitchen	2L4T12-EB-40W	1000	100%	24	68	2L4T8-SP	1000	100%	24	54	$33.58	$805.94	0.34	336
KITCHEN	EM/Night	LED EXIT	8766	100%	1	3	NO RETRO	8766	100%	1	3	$0.00	$0.00	0.00	0
KITCHEN	Kitchen	2L4T12-EB-40W	1000	100%	1	68	2L4T8-LP	1000	100%	1	48	$33.58	$33.58	0.02	20
KITCHEN WHSE	Kitchen	1L8T8-SP	1000	100%	4	70	NO RETRO	1000	100%	4	70	$0.00	$0.00	0.00	0
KITCHEN WHSE	EM/Night	LED EXIT	8766	100%	1	3	NO RETRO	8766	100%	1	3	$0.00	$0.00	0.00	0
KITCHEN LAUNDRY	Kitchen	2L4T12-EB-40W	1000	100%	1	68	2L4T8-LP	1000	100%	1	48	$33.58	$33.58	0.02	20
KITCHEN RR	Private RR	2L100IN	2250	10%	1	200	N2L2T8-SP-2'WL	2250	10%	1	32	$147.88	$147.88	0.02	378
KITCHEN OFFICE	Offices, Private	2L4T12-EB-40W	2250	50%	1	68	2L4T8-SP-OS	1575	38%	1	54	$33.58	$33.58	0.01	68
KITCHEN OFFICE	Offices, Private	NOTHING	2250	50%	1	0	WSIR	2250	50%	1	0	$79.32	$79.32	0.00	0
CUST / MAINT OFF 302	Offices, Private	2L4T12-EB-40W	2250	50%	2	68	2L4T8-SP	1440	50%	2	54	$33.58	$67.16	0.01	150
CUST / MAINT OFF 302	Offices, Private	1L8T8-SP	2250	50%	3	70	NO RETRO	2250	50%	3	70	$0.00	$0.00	0.00	0
MECH / SHOP 304	Offices, Private	1L8T8-SP	2250	50%	7	70	NO RETRO	2250	50%	7	70	$0.00	$0.00	0.00	0
MECH / SHOP 304	Offices, Private	LED EXIT	2250	50%	1	3	NO RETRO	2250	50%	1	3	$0.00	$0.00	0.00	0
CLASS 306 ENTRY	Class	2L4T12-EB-40W	1987	100%	4	68	2L4T8-SP	1987	100%	4	54	$33.58	$134.32	0.06	111
CLASS 306 ENTRY	Class	NOTHING	1987	100%	1	0	CIR	1987	100%	1	0	$256.93	$256.93	0.00	0
CLASS 306	Class	2L4T12-EB-40W	1987	100%	12	68	2L4T8-SP-OS	1391	75%	12	54	$33.58	$402.97	0.33	720
CLASS 306	Class	NOTHING	1987	100%	1	0	WCDT	1987	100%	1	0	$256.93	$256.93	0.00	0
COOKING	Class	2L4T12-EB-40W	1987	100%	12	68	2L4T8-SP-OS	1391	75%	12	54	$33.58	$402.97	0.33	720
COOKING	Class	NOTHING	1987	100%	3	0	WCDT	1987	100%	3	0	$256.93	$770.80	0.00	0
LAUNDRY	Custodial	2L4T12-EB-40W	2250	30%	1	68	2L4T8-SP-OS	1575	23%	1	54	$33.58	$33.58	0.01	68
LAUNDRY	Custodial	NOTHING	2250	30%	1	0	WSIR	2250	30%	1	0	$79.32	$79.32	0.00	0
STAFF LOUNGE	Offices, Private	3L4T8-SP-DUAL	2250	50%	10	90	3L4T8-SP-DUAL-NR-OS	1575	38%	10	90	$0.00	$0.00	0.11	608
STAFF LOUNGE	Offices, Private	NOTHING	2250	50%	1	0	WCDT	2250	50%	1	0	$256.93	$256.93	0.00	0
MEDIA CENTER 212	Library	2L4T12-EB-40W	2000	90%	20	68	2L4T8-SP-HIGH	2000	90%	20	54	$39.95	$799.05	0.25	560
MEDIA CENTER 212	Library	2L4T12-EB-40W	2000	90%	18	68	2L4T8-SP	2000	90%	18	54	$33.58	$604.46	0.23	504
MEDIA CLASS AREA	Class	3L4T8-SP	1987	100%	9	85	3L4T8-SP-NR-OS	1391	75%	9	85	$0.00	$0.00	0.19	456
MEDIA CLASS AREA	Class	NOTHING	1987	100%	1	0	WCDT	1987	100%	1	0	$256.93	$256.93	0.00	0
MEDIA OFFICE	Offices, Private	2L4T12-EB-40W	2250	50%	2	68	2L4T8-SP-OS	1575	38%	2	54	$33.58	$67.16	0.03	136
MEDIA OFFICE	Offices, Private	NOTHING	2250	50%	1	0	WSIR	2250	50%	1	0	$79.32	$79.32	0.00	0
MEDIA WORK ROOM	Offices, Private	2L4T12-EB-40W	2250	50%	2	68	2L4T8-SP-OS	1575	38%	2	54	$33.58	$67.16	0.03	136
MEDIA WORK ROOM	Offices, Private	NOTHING	2250	50%	1	0	WSIR	2250	50%	1	0	$79.32	$79.32	0.00	0
MEDIA CORRIDOR	Halls High School	2L4T12-EB-40W	4163	100%	6	68	2L4T8-LP	4163	100%	6	48	$33.58	$201.49	0.12	500
OFFICE 214	Offices, Private	2L4T12-EB-40W	2250	50%	2	68	2L4T8-SP-OS	1575	38%	2	54	$33.58	$67.16	0.03	136
OFFICE 214	Offices, Private	NOTHING	2250	50%	1	0	WSIR	2250	50%	1	0	$79.32	$79.32	0.00	0
KITCHEN / BREAK	Offices, Private	2L4T12-EB-40W	2250	50%	1	68	2L4T8-SP-OS	1575	38%	1	54	$33.58	$33.58	0.01	68
KITCHEN / BREAK	Offices, Private	NOTHING	2250	50%	1	0	WSIR	2250	50%	1	0	$79.32	$79.32	0.00	0
STUDIO CLASS 309	Class	2L4T12-EB-40W	1987	100%	6	68	2L4T8-SP-OS	1391	75%	6	54	$33.58	$201.49	0.17	360
STUDIO CLASS 309	Class	NOTHING	1987	100%	1	0	WCDT	1987	100%	1	0	$256.93	$256.93	0.00	0
MENS RESTROOM	Halls High School	2L4T12-EB-40W	4163	100%	3	68	REMOVE	4163	100%	3	0	$19.68	$59.04	0.20	849
MENS RESTROOM	Halls High School	NOTHING	4163	100%	3	0	N1L4T8-SP-4'WR	4163	100%	3	28	$121.87	$365.62	-0.08	-350
WOMENS RESTROOM	Halls High School	2L4T12-EB-40W	4163	100%	3	68	REMOVE	4163	100%	3	0	$19.68	$59.04	0.20	849
WOMENS RESTROOM	Halls High School	NOTHING	4163	100%	3	0	N1L4T8-SP-4'WR	4163	100%	3	28	$121.87	$365.62	-0.08	-350
COMPUTER LAB 303	Class	2L4T12-EB-40W	1987	100%	11	68	2L4T8-SP-OS	1391	75%	11	54	$33.58	$369.39	0.30	660
COMPUTER LAB 303	Class	NOTHING	1987	100%	1	0	WCDT	1987	100%	1	0	$256.93	$256.93	0.00	0
OFFICE / SERVER 303A	Offices, Private	2L4T12-EB-40W	2250	50%	1	68	2L4T8-SP-OS	1575	38%	1	54	$33.58	$33.58	0.01	68
OFFICE / SERVER 303A	Offices, Private	NOTHING	2250	50%	1	0	WSIR	2250	50%	1	0	$79.32	$79.32	0.00	0
CLASS 301	Class	3L4T8-SP-DUAL	1987	100%	12	90	3L4T8-SP-DUAL-NR-OS	1391	75%	12	90	$0.00	$0.00	0.27	644
CLASS 301	Class	NOTHING	1987	100%	1	0	WCDT	1987	100%	1	0	$256.93	$256.93	0.00	0
CAREER CENTER 104	Common Admin	3L4T8-SP-DUAL	2250	100%	8	90	NO RETRO	2250	100%	8	90	$0.00	$0.00	0.00	0
CAREER OFFICE 104A	Offices, Private	2L4T12-EB-40W	2250	50%	2	68	2L4T8-SP-OS	1575	38%	2	54	$33.58	$67.16	0.03	136
CAREER OFFICE 104A	Offices, Private	NOTHING	2250	50%	1	0	WSDT	2250	50%	1	0	$114.31	$114.31	0.00	0
CAREER COPY RM 104B	Offices, Private	2L4T12-EB-40W	2250	50%	1	68	2L4T8-SP-OS	1575	38%	1	54	$33.58	$33.58	0.01	68
CAREER COPY RM 104B	Offices, Private	NOTHING	2250	50%	1	0	WSIR	2250	50%	1	0	$79.32	$79.32	0.00	0
CAREER CLASSROOM 104C	Offices, Private	2L4T12-EB-40W	2250	50%	6	68	2L4T8-LP-OS	1575	38%	6	48	$33.58	$201.49	0.10	464
CAREER CLASSROOM 104C	Offices, Private	NOTHING	2250	50%	1	0	WCDT	2250	50%	1	0	$256.93	$256.93	0.00	0
CAREER BREAK RM 104E	Offices, Private	2L4T12-EB-40W	2250	50%	1	68	2L4T8-SP-OS	1575	38%	1	54	$33.58	$33.58	0.01	68
CAREER BREAK RM 104E	Offices, Private	NOTHING	2250	50%	1	0	WSIR	2250	50%	1	0	$79.32	$79.32	0.00	0
CAREER AREA RRS	Private RR	2L100IN	2250	10%	2	200	N2L2T8-SP-2'WL	1575	10%	2	32	$147.88	$295.75	0.03	799
FILE ROOM	Offices, Private	2L4T12-EB-40W	2250	50%	2	68	2L4T8-SP-OS	1575	38%	2	54	$33.58	$67.16	0.03	136
FILE ROOM	Offices, Private	NOTHING	2250	50%	1	0	WSIR	2250	50%	1	0	$79.32	$79.32	0.00	0
CAREER OFFICE 104F	Offices, Private	3L4T8-SP-DUAL	2250	50%	3	90	3L4T8-SP-DUAL-NR-OS	1575	38%	3	90	$0.00	$0.00	0.03	182
CAREER OFFICE 104F	Offices, Private	NOTHING	2250	50%	1	0	WSDT	2250	50%	1	0	$114.31	$114.31	0.00	0
CLINIC 102	Common Admin	3L4T8-SP-DUAL	2250	100%	6	90	NO RETRO	2250	100%	6	90	$0.00	$0.00	0.00	0
CLINIC RR	Private RR	2L100IN	2250	10%	1	200	N2L2T8-SP-2'WL	1575	10%	1	32	$147.88	$147.88	0.02	400
SPECIAL ED CLASS 202	Class	3L4T8-SP-DUAL-OS	1987	100%	8	82	NO RETRO	1987	100%	8	82	$0.00	$0.00	0.00	0
SPED FILE ROOM	Storage	3L4T8-SP	2250	20%	1	85	NO RETRO	2250	20%	1	85	$0.00	$0.00	0.00	0
SPED RR	Private RR	3L4T8-SP	2250	10%	1	85	NO RETRO	2250	10%	1	85	$0.00	$0.00	0.00	0
SPED OFFICE	Private RR	3L4T8-SP	2250	10%	2	85	NO RETRO	2250	10%	2	85	$0.00	$0.00	0.00	0
COMPUTER LAB 204	Class	2L4T12-EB-40W	1987	100%	11	68	2L4T8-SP-OS	1391	75%	11	54	$33.58	$369.39	0.30	660
COMPUTER LAB 204	Class	NOTHING	1987	100%	1	0	WCDT	1987	100%	1	0	$256.93	$256.93	0.00	0
TECH OFFICE	Offices, Private	2L4T12-EB-40W	2250	50%	2	68	2L4T8-SP-OS	1575	38%	2	54	$33.58	$67.16	0.03	136
TECH OFFICE	Offices, Private	NOTHING	2250	50%	1	0	WSIR	2250	50%	1	0	$79.32	$79.32	0.00	0
MENS RESTROOM	Halls High School	2L4T12-EB-40W	4163	100%	3	68	REMOVE	4163	100%	3	0	$19.68	$59.04	0.20	849

MENS RESTROOM	Halls High School	NOTHING	4163	100%	3	0	N1L4T8-SP-4'WR	4163	100%	3	28	$121.87	$365.62	-0.08	-350
WOMENS RESTROOM	Halls High School	2L4T12-EB-40W	4163	100%	3	68	REMOVE	4163	100%	3	0	$19.68	$59.04	0.20	849
WOMENS RESTROOM	Halls High School	NOTHING	4163	100%	3	0	N1L4T8-SP-4'WR	4163	100%	3	28	$121.87	$365.62	-0.08	-350
COMPUTER STOR 215	Storage	2L4T12-EB-40W	2250	20%	2	68	2L4T8-SP-OS	1575	15%	2	54	$33.58	$67.16	0.01	136
COMPUTER STOR 215	Storage	NOTHING	2250	20%	1	0	WSIR	2250	20%	1	0	$79.32	$79.32	0.00	0
CUSTODIAL 217	Custodial	2L4T12-40W	2250	30%	1	86	2L4T8-SP-OS	1575	23%	1	54	$33.58	$33.58	0.01	108
CUSTODIAL 217	Custodial	NOTHING	2250	30%	1	0	WSIR	2250	30%	1	0	$79.32	$79.32	0.00	0
STORAGE 217	Storage	2L4T12-EB-40W	2250	20%	1	68	2L4T8-SP-OS	1575	15%	1	54	$33.58	$33.58	0.01	68
STORAGE 217	Storage	NOTHING	2250	20%	1	0	WSIR	2250	20%	1	0	$79.32	$79.32	0.00	0
CLASS 219	Class	2L4T12-EB-40W	1987	100%	9	68	2L4T8-SP-OS	1391	75%	9	54	$33.58	$302.23	0.25	540
CLASS 219	Class	NOTHING	1987	100%	1	0	WCDT	1987	100%	1	0	$256.93	$256.93	0.00	0
CLASS 219	EM/Night	2L15EX	8766	100%	1	30	NLEDEX-G-B	8766	100%	1	3	$59.26	$59.26	0.03	237
STORAGE 1	Storage	2L4T12-EB-40W	2250	20%	1	68	2L4T8-SP-OS	1575	15%	1	54	$33.58	$33.58	0.01	68
STORAGE 1	Storage	NOTHING	2250	20%	1	0	WSIR	2250	20%	1	0	$79.32	$79.32	0.00	0
STORAGE 2	Storage	2L4T8-SP	2250	20%	2	58	2L4T8-SP-NR-OS	1575	15%	2	58	$0.00	$0.00	0.01	78
STORAGE 2	Storage	NOTHING	2250	20%	1	0	WSIR	2250	20%	1	0	$79.32	$79.32	0.00	0
CLASS 211	Class	2L4T12-EB-40W	1987	100%	12	68	2L4T8-SP-OS	1391	75%	12	54	$33.58	$402.97	0.33	720
CLASS 211	Class	NOTHING	1987	100%	1	0	WCDT	1987	100%	1	0	$256.93	$256.93	0.00	0
CLASS 213	Class	2L4T12-EB-40W	1987	100%	9	68	2L4T8-SP-OS	1391	75%	9	54	$33.58	$302.23	0.25	540
CLASS 213	Class	NOTHING	1987	100%	1	0	WCDT	1987	100%	1	0	$256.93	$256.93	0.00	0
CLASS 209	Class	2L4T12-EB-40W	1987	100%	9	68	2L4T8-SP-OS	1391	75%	9	54	$33.58	$302.23	0.25	540
CLASS 209	Class	NOTHING	1987	100%	1	0	WCDT	1987	100%	1	0	$256.93	$256.93	0.00	0
CLASS 207	Class	2L4T12-EB-40W	1987	100%	9	68	2L4T8-SP-OS	1391	75%	9	54	$33.58	$302.23	0.25	540
CLASS 207	Class	NOTHING	1987	100%	1	0	WCDT	1987	100%	1	0	$256.93	$256.93	0.00	0
CLASS 203	Class	2L4T12-EB-40W	1987	100%	9	68	2L4T8-SP-OS	1391	75%	9	54	$33.58	$302.23	0.25	540
CLASS 203	Class	NOTHING	1987	100%	1	0	WCDT	1987	100%	1	0	$256.93	$256.93	0.00	0
CLASS 205	Class	2L4T12-EB-40W	1987	100%	9	68	2L4T8-SP-OS	1391	75%	9	54	$33.58	$302.23	0.25	540
CLASS 205	Class	NOTHING	1987	100%	1	0	WCDT	1987	100%	1	0	$256.93	$256.93	0.00	0
MUSIC 201	Class	2L4T12-EB-40W	1987	100%	27	68	2L4T8-SP-OS-HIGH	1391	75%	27	54	$39.95	$1,078.72	0.74	1,620
MUSIC 201	Class	NOTHING	1987	100%	1	0	WCDT	1987	100%	1	0	$256.93	$256.93	0.00	0
MUSIC ENTRY	Class	2L4T12-40W	1987	100%	1	86	2L4T8-LP	1987	100%	1	48	$33.58	$33.58	0.04	76
MUSIC OFFICE	Offices, Private	2L4T12-EB-40W	2250	50%	2	68	2L4T8-SP-OS	1575	38%	2	54	$33.58	$67.16	0.03	136
MUSIC OFFICE	Offices, Private	NOTHING	2250	50%	1	0	WSIR	2250	50%	1	0	$79.32	$79.32	0.00	0
MUSIC WORK ROOM	Offices, Private	2L8T8-SP	2250	50%	2	110	2L8T8-SP-NR-OS	1575	38%	2	110	$0.00	$0.00	0.03	149
MUSIC WORK ROOM	Offices, Private	NOTHING	2250	50%	1	0	WSIR	2250	50%	1	0	$79.32	$79.32	0.00	0
MUSIC VESTIBULE	Class	2LU6T8-SP	1987	100%	1	58	N2L2T8-SP-2X2TR	1987	100%	1	32	$141.97	$141.97	0.03	52
UNIFORM STORAGE	Storage	2L4T12-EB-40W	2250	20%	1	68	2L4T8-SP-OS	1575	15%	1	54	$33.58	$33.58	0.01	68
UNIFORM STORAGE	Storage	NOTHING	2250	20%	1	0	WSIR	2250	20%	1	0	$79.32	$79.32	0.00	0
BAND STORAGE	Storage	2L4T12-EB-40W	2250	20%	1	68	2L4T8-SP-OS	1575	15%	1	54	$33.58	$33.58	0.01	68
BAND STORAGE	Storage	NOTHING	2250	20%	1	0	WSIR	2250	20%	1	0	$79.32	$79.32	0.00	0
ENSAMBLE	Offices, Private	2L4T12-EB-40W	2250	50%	6	68	2L4T8-SP-OS-HIGH	1575	38%	6	54	$39.95	$239.72	0.08	408
ENSAMBLE	Offices, Private	NOTHING	2250	50%	1	0	WCIR	2250	50%	1	0	$256.93	$256.93	0.00	0
ENSAMBLE VESTIBULE	Offices, Private	2L4T12-EB-40W	2250	50%	1	68	2L4T8-LP	2250	50%	1	48	$33.58	$33.58	0.01	45
AUDITORIUM	Auditorium	2L4T12-EB-40W	2097	40%	13	68	2L4T8-SP	2097	40%	13	54	$33.58	$436.55	0.07	382
AUDITORIUM	EM/Night	LED EXIT	8766	100%	4	3	NO RETRO	8766	100%	4	3	$0.00	$0.00	0.00	0
SOUND BOOTH	Storage	2L4T12-EB-40W	2250	20%	1	68	2L4T8-SP	2250	20%	1	54	$33.58	$33.58	0.00	32
STAGE	Storage	2L8T8-SP	2250	20%	21	110	NO RETRO	2250	20%	21	110	$0.00	$0.00	0.00	0
STAGE STORAGE	Storage	2L8T8-SP	2250	20%	1	110	NO RETRO	2250	20%	1	110	$0.00	$0.00	0.00	0
WATER RISER	Storage	2L4T12-EB-40W	2250	20%	1	68	2L4T8-SP	2250	20%	1	54	$33.58	$33.58	0.00	32
STAGE RR	Private RR	2L100IN	2250	10%	1	200	N2L2T8-SP-WL	2250	10%	1	32	$147.88	$147.88	0.02	378
STORAGE 402	Storage	3L4T8-SP	2250	20%	4	85	3L4T8-SP-NR-OS	1575	15%	4	85	$0.00	$0.00	0.02	230
STORAGE 402	Storage	NOTHING	2250	20%	1	0	WSIR	2250	20%	1	0	$79.32	$79.32	0.00	0
SCIENCE 404	Class	2L4T12-EB-40W	1987	100%	15	68	2L4T8-SP-OS	1391	75%	15	54	$33.58	$503.71	0.41	900
SCIENCE 404	Class	NOTHING	1987	100%	1	0	WCDT	1987	100%	1	0	$256.93	$256.93	0.00	0
WORK ROOM 406	Offices, Private	3L4T8-SP-DUAL	1440	50%	8	90	3L4T8-SP-DUAL-NR-OS	1008	38%	8	90	$0.00	$0.00	0.09	311
WORK ROOM 406	Offices, Private	NOTHING	1440	50%	1	0	WCDT	1440	50%	1	0	$256.93	$256.93	0.00	0
SCIENCE 408	Class	3L4T8-SP-DUAL-OS	1987	100%	1	82	NO RETRO	1987	100%	1	82	$0.00	$0.00	0.00	0
SCIENCE 408	Class	3L2T8-SP-OS	1987	100%	1	45	NO RETRO	1987	100%	1	45	$0.00	$0.00	0.00	0
SCIENCE 401	Class	3L4T8-SP-DUAL	1987	100%	20	90	3L4T8-SP-DUAL-NR-OS	1391	75%	20	90	$0.00	$0.00	0.45	1,073
SCIENCE 401	Class	NOTHING	1987	100%	2	0	WCDT	1987	100%	2	0	$256.93	$513.87	0.00	0
SCIENCE 401	EM/Night	LED EXIT	8766	100%	2	3	NO RETRO	8766	100%	2	3	$0.00	$0.00	0.00	0
WORK / STOR 401A	Offices, Private	3L4T8-SP	2250	50%	4	85	3L4T8-SP-NR-OS	1575	38%	4	85	$0.00	$0.00	0.04	230
WORK / STOR 401A	Offices, Private	NOTHING	2250	50%	1	0	WSIR	2250	50%	1	0	$79.32	$79.32	0.00	0
CUST / STOR 403	Custodial	4L4T8-SP	2250	30%	1	112	4L4T8-SP-NR-OS	2250	23%	1	112	$0.00	$0.00	0.01	0
CUST / STOR 403	Custodial	NOTHING	2250	30%	1	0	WSIR	2250	30%	1	0	$79.32	$79.32	0.00	0
ELECTRIC ROOM 403A	Mechanical	2L4T8-SP	2250	10%	1	58	NO RETRO	2250	10%	1	58	$0.00	$0.00	0.00	0
CLASS 405	Class	3L4T8-SP-DUAL-OS	1987	100%	12	82	NO RETRO	1987	100%	12	82	$0.00	$0.00	0.00	0
CLASS 407	Class	3L4T8-SP-DUAL-OS	1987	100%	12	82	NO RETRO	1987	100%	12	82	$0.00	$0.00	0.00	0
CLASS 409	Class	3L4T8-SP-DUAL-OS	1987	100%	12	82	NO RETRO	1987	100%	12	82	$0.00	$0.00	0.00	0
CLASS 412	Class	3L4T8-SP-DUAL-OS	1987	100%	12	82	NO RETRO	1987	100%	12	82	$0.00	$0.00	0.00	0
CLASS 410	Class	3L4T8-SP-DUAL-OS	1987	100%	12	82	NO RETRO	1987	100%	12	82	$0.00	$0.00	0.00	0
FIRE RISER ROOM	Mechanical	4L4T8-SP	2250	10%	1	112	NO RETRO	2250	10%	1	112	$0.00	$0.00	0.00	0
CLASS 310	Class	4L4T8-SP	1987	100%	18	112	4L4T8-SP-NR-OS	1391	75%	18	112	$0.00	$0.00	0.50	1,202
CLASS 310	Class	NOTHING	1987	100%	1	0	WCDT	1987	100%	1	0	$256.93	$256.93	0.00	0
CLASS 310	EM/Night	LED EXIT	8766	100%	2	3	NO RETRO	8766	100%	2	3	$0.00	$0.00	0.00	0
WORK / STOR	Offices, Private	3L4T8-SP	2250	50%	2	85	3L4T8-SP-NR-OS	1575	38%	2	85	$0.00	$0.00	0.02	115
WORK / STOR	Offices, Private	NOTHING	2250	50%	1	0	WSIR	2250	50%	1	0	$79.32	$79.32	0.00	0
CLASS 312	Class	4L4T8-SP	1987	100%	9	112	4L4T8-SP-NR-OS	1391	75%	9	112	$0.00	$0.00	0.25	601
CLASS 312	Class	NOTHING	1987	100%	1	0	WCDT	1987	100%	1	0	$256.93	$256.93	0.00	0
CLASS 314	Class	4L4T8-SP	1987	100%	9	112	4L4T8-SP-NR-OS	1391	75%	9	112	$0.00	$0.00	0.25	601
CLASS 314	Class	NOTHING	1987	100%	1	0	WCDT	1987	100%	1	0	$256.93	$256.93	0.00	0
CLASS 311	Class	4L4T8-SP	1987	100%	9	112	4L4T8-SP-NR-OS	1391	75%	9	112	$0.00	$0.00	0.25	601
CLASS 311	Class	2L4T8-SP	1987	100%	3	58	2L4T8-SP-NR-OS	1391	75%	3	58	$0.00	$0.00	0.04	104
CLASS 311	Class	NOTHING	1987	100%	1	0	WCDT	1987	100%	1	0	$256.93	$256.93	0.00	0
CLASS 313	Class	4L4T8-SP	1987	100%	9	112	4L4T8-SP-NR-OS	1391	75%	9	112	$0.00	$0.00	0.25	601
CLASS 313	Class	2L4T8-SP	1987	100%	3	58	2L4T8-SP-NR-OS	1391	75%	3	58	$0.00	$0.00	0.04	104
CLASS 313	Class	NOTHING	1987	100%	1	0	WCDT	1987	100%	1	0	$256.93	$256.93	0.00	0
COMPUTER LAB 316	Class	3L4T8-SP	1987	100%	14	85	3L4T8-SP-NR-OS	1391	75%	14	85	$0.00	$0.00	0.30	709
COMPUTER LAB 316	Class	NOTHING	1987	100%	1	0	WCDT	1987	100%	1	0	$256.93	$256.93	0.00	0
COMPUTER LAB 319	Class	3L4T8-SP	1987	100%	14	85	3L4T8-SP-NR-OS	1391	75%	14	85	$0.00	$0.00	0.30	709
COMPUTER LAB 319	Class	NOTHING	1987	100%	1	0	WCDT	1987	100%	1	0	$256.93	$256.93	0.00	0
OFFICE / SERVER	Offices, Private	3L4T8-SP	2250	50%	1	85	3L4T8-SP-NR-OS	1575	38%	1	85	$0.00	$0.00	0.01	57
OFFICE / SERVER	Offices, Private	NOTHING	2250	50%	1	0	WSIR	2250	50%	1	0	$79.32	$79.32	0.00	0
ELECTRIC ROOM	Mechanical	3L4T8-SP	2250	10%	1	85	NO RETRO	2250	10%	1	85	$0.00	$0.00	0.00	0
CUSTODIAL	Custodial	3L4T8-SP	2250	30%	1	85	3L4T8-SP-NR-OS	1575	23%	1	85	$0.00	$0.00	0.01	57
CUSTODIAL	Custodial	NOTHING	2250	30%	1	0	WSIR	2250	30%	1	0	$79.32	$79.32	0.00	0
HALL 300	Halls High School	2LF40-8IAX	4163	100%	10	71	2LF40-8IAX-NR-PC	2082	50%	10	71	$0.00	$0.00	0.36	1,478

HALL 300	Halls High School	NOTHING	4163	100%	1	0	PHOTOCELL	4163	100%	1	0	$95.25	$95.25	0.00	0
HALL 300	Halls High School	2L13CF	4163	100%	4	26	NO RETRO	4163	100%	4	26	$0.00	$0.00	0.00	0
HALL 300	Halls High School	1L18CF	4163	100%	2	18	NO RETRO	4163	100%	2	18	$0.00	$0.00	0.00	0
HALL 300	Halls High School	2LT5HO	4163	100%	2	117	NO RETRO	4163	100%	2	117	$0.00	$0.00	0.00	0
HALL 300	EM/Night	LED EXIT	8766	100%	4	3	NO RETRO	8766	100%	4	3	$0.00	$0.00	0.00	0
HALL 300	Halls High School	2L4T12-EB-40W	4163	100%	20	68	2L4T8-SP	4163	100%	20	54	$33.58	$671.62	0.28	1,166
HALL 400	Halls High School	2L4T8-SP	4163	100%	14	58	NO RETRO	4163	100%	14	58	$0.00	$0.00	0.00	0
HALL 400	Halls High School	2LF40-BIAX	4163	100%	5	71	2LF40-BIAX-NR-PC	2082	50%	5	71	$0.00	$0.00	0.18	739
HALL 400	Halls High School	NOTHING	4163	100%	1	0	PHOTOCELL	4163	100%	1	0	$95.25	$95.25	0.00	0
HALL 400	Halls High School	1L42CF	4163	100%	2	42	NO RETRO	4163	100%	2	42	$0.00	$0.00	0.00	0
HALL 400	EM/Night	LED EXIT	8766	100%	5	3	NO RETRO	8766	100%	5	3	$0.00	$0.00	0.00	0
HALL 200	Halls High School	1L100IN	4163	100%	2	100	N2L13CF-CPY	4163	100%	2	26	$92.87	$185.75	0.15	616
HALL 200	Halls High School	2L4T12-EB-40W	4163	100%	21	68	2L4T8-SP	4163	100%	21	54	$33.58	$705.20	0.29	1,224
HALL 200	EM/Night	LED EXIT	8766	100%	5	3	NO RETRO	8766	100%	5	3	$0.00	$0.00	0.00	0
HALL 500	Halls High School	1L100IN	4163	100%	1	100	N2L13CF-CPY	4163	100%	1	26	$92.87	$92.87	0.07	308
HALL 500	Halls High School	2L4T12-EB-40W	4163	100%	10	68	2L4T8-SP	4163	100%	10	54	$33.58	$335.81	0.14	583
HALL 500	EM/Night	LED EXIT	8766	100%	2	3	NO RETRO	8766	100%	2	3	$0.00	$0.00	0.00	0
HALL 100	Halls High School	3L4T8-SP	4163	100%	8	85	2L4T8-SP-24RFL	4163	100%	8	54	$56.77	$454.16	0.25	1,032
HALL 100	EM/Night	LED EXIT	8766	100%	1	3	NO RETRO	8766	100%	1	3	$0.00	$0.00	0.00	0
COMMON / CAFETERIA	Halls High School	2L4T12-EB-40W	4163	100%	25	68	2L4T8-LP	4163	100%	25	48	$33.58	$839.52	0.50	2,082
COMMON / CAFETERIA	EM/Night	LED EXIT	8766	100%	2	3	NO RETRO	8766	100%	2	3	$0.00	$0.00	0.00	0
COMMON / CAFETERIA	Halls High School	3L4T8-SP	4163	100%	1	85	NO RETRO	4163	100%	1	85	$0.00	$0.00	0.00	0
COMMON / CAFETERIA	Halls High School	1L100HID	4163	100%	8	129	NO RETRO	4163	100%	8	129	$0.00	$0.00	0.00	0
COMMON / CAFETERIA	Halls High School	3L4T8-SP	4163	100%	17	85	NO RETRO	4163	100%	17	85	$0.00	$0.00	0.00	0
COMMON / CAFETERIA	Halls High School	3L4T8-SP	4163	100%	4	85	3L4T8-SP-PCDIM	2082	50%	4	96	$154.61	$618.46	0.15	616
COMMON / CAFETERIA	Halls High School	2L8T8-SP	4163	100%	14	110	2L4T8-SP-8'CONV-ASYMRFL	4163	100%	14	54	$57.91	$810.72	0.78	3,264
COMMON / CAFETERIA	Halls High School	2L4T8-SP	4163	100%	2	58	1L4T8-SP-4'CONV-ASYMRFL	4163	100%	2	28	$55.00	$109.99	0.06	250
COMMON / CAFETERIA	Halls High School	1L42CF	4163	100%	7	42	NO RETRO	4163	100%	7	42	$0.00	$0.00	0.00	0
COMMONS DISPLAY CASE	Halls High School	1L4T12-40W	4163	100%	3	43	1L4T8-LP	4163	100%	3	25	$31.45	$94.34	0.05	225
COMMONS DISPLAY CASE	Halls High School	1L4T8-SP	4163	100%	1	32	NO RETRO	4163	100%	1	32	$0.00	$0.00	0.00	0
COMMONS DISPLAY CASE	Halls High School	1L4T12-40W	4163	100%	6	43	1L4T8-LP	4163	100%	6	25	$31.45	$188.67	0.11	450
AUTO SHOP	Storage	3L4T8-SP	2250	20%	12	85	NO RETRO	2250	20%	12	85	$0.00	$0.00	0.00	0
MODULAR CLASSROOM	Storage	4L4T12-40W	2250	20%	12	172	2L4T8-SP-DLMP	2250	20%	12	54	$35.93	$431.17	0.28	3,186
MODULAR CLASSROOM	EM/Night	2L15EX	8766	100%	2	30	NLEDEX-G-B	8766	100%	2	3	$59.26	$118.53	0.05	473
TOTALS					**1340**					**1340**			**$52,599.24**	**31.75**	**99,865**

* Based on ANSI wattages - to be verified by contractor

** Based on manufacturer's wattages - to be verified by contractor

BUILDING: East Grand Middle School
LIGHTING CONTRACTOR: Contractor Name
ELECTRIC CONSUMPTION RATE: $0.05900 per kWh
ELECTRIC DEMAND RATE: $4.35 per kW
HEATING FUEL RATE: $8.290 per MMBtu

ECM 5.1: Lighting system upgrades

		EXISTING					PROPOSED								
AREA	USAGE TYPE	EXISTING FIXTURE DESCRIPTION	ANNUAL HOURS	Demand Div Factor	QTY	WATTS EACH*	RETROFIT DESCRIPTION	ANNUAL HOURS	Demand Div Factor	QTY	WATTS EACH**	UNIT PRICE	TOTAL EXTENDED PRICE	TOTAL KW SAVED	K SA PE
COMMONS	Halls Middle & Elem	1L400HID	2733	100%	6	458	N6L4T8-HP-LNS-OS	1913	75%	6	222	$274.11	$1,644.68	1.75	4,
COMMONS	Halls Middle & Elem	1L400HID	2733	100%	6	458	N6L4T8-SP-LNS-OS-PCDIM	1913	38%	6	192	$299.32	$1,795.90	2.32	5,
COMMONS	Halls Middle & Elem	1L1000HID	2733	100%	6	1080	N8L4T8-HP-LNS-OS-PC	1913	38%	6	296	$387.07	$2,322.39	5.81	14,
COMMONS	Halls Middle & Elem	NOTHING	2733	100%	1	0	PHOTOCELL	2733	100%	1	0	$95.25	$95.25	0.00	
COMMONS	Halls Middle & Elem	2L4T8-SP	2733	100%	15	58	2L4T8-LP-OS-HIGH	2914	75%	15	48	$38.84	$582.53	0.33	2
COMMONS	EM/Night	2L4T8-SP-EM	8766	100%	12	58	2L4T8-LP-DUAL-EM-HIGH	8766	100%	12	50	$134.27	$1,611.26	0.10	8
COMMONS	Halls Middle & Elem	3L4T8-SP	2733	100%	3	85	2L4T8-SP-24RFL	2733	100%	3	54	$56.77	$170.31	0.09	2
COMMONS	EM/Night	3L4T8-SP-EM	8766	100%	2	82	2L4T8-SP-24RFL-EM	8766	100%	2	54	$152.21	$304.41	0.06	4
COMMONS	Halls Middle & Elem	NOTHING	2733	100%	2	0	WCDT	4163	100%	2	0	$256.93	$513.87	0.00	
ENTRY VESTIBULE	Halls Middle & Elem	1L70HID	2733	100%	2	90	1L32CF-CONV-PC	1367	50%	2	32	$75.85	$151.70	0.15	4
ENTRY VESTIBULE	Halls Middle & Elem	NOTHING	2733	100%	1	0	PHOTOCELL	2733	100%	1	0	$95.25	$95.25	0.00	
STAGE	Storage	3L4T8-SP	2250	20%	11	85	2L4T8-SP-24RFL	2250	20%	11	54	$56.77	$624.47	0.07	7
RAMP / CORRIDOR	Halls Middle & Elem	3L4T8-SP	4163	100%	2	85	2L4T8-SP-24RFL	4163	100%	2	54	$56.77	$113.54	0.06	2
RAMP / CORRIDOR	EM/Night	3L4T8-SP-DUAL-EM	8766	100%	1	82	2L4T8-SP-24RFL-DUAL-EM	8766	100%	1	56	$152.53	$152.53	0.03	2
CHOIR	Class	3L4T8-SP-OS	2365	100%	13	82	2L4T8-SP-24RFL-OS	1656	75%	13	54	$56.77	$738.01	0.54	1,
CHOIR STORAGE	Storage	3L4T8-SP	2250	20%	2	85	2L4T8-SP-24RFL	2250	20%	2	54	$56.77	$113.54	0.01	1
GIRLS RESTROOM	Halls Middle & Elem	1L32CF	4163	100%	1	32	NO RETRO	4163	100%	1	32	$0.00	$0.00	0.00	
GIRLS RESTROOM	Halls Middle & Elem	2L4T8-SP	4163	100%	8	58	2L4T8-LP	4163	100%	8	48	$32.46	$259.71	0.08	3
GIRLS RESTROOM	EM/Night	2L4T8-SP-EM	8766	100%	1	58	2L4T8-LP-DUAL-EM	8766	100%	1	50	$127.90	$127.90	0.01	7
BOYS RESTROOM	Halls Middle & Elem	1L32CF	4163	100%	1	32	NO RETRO	4163	100%	1	32	$0.00	$0.00	0.00	
BOYS RESTROOM	Halls Middle & Elem	2L4T8-SP	4163	100%	8	58	2L4T8-LP	4163	100%	8	48	$32.46	$259.71	0.08	3
BOYS RESTROOM	EM/Night	2L4T8-SP-EM	8766	100%	1	58	2L4T8-LP-DUAL-EM	8766	100%	1	50	$127.90	$127.90	0.01	7
CUSTODIAL	Custodial	2L4T8-SP	2250	30%	1	58	NO RETRO	2250	30%	1	58	$0.00	$0.00	0.00	
CUSTODIAL	Custodial	NOTHING	2250	30%	1	0	WSIR	2250	30%	1	0	$79.32	$79.32	0.00	
GYMNASIUM	Gym	1L400HID	2733	100%	30	458	N6LT8-HP-LNS-WG-OS	1913	75%	30	222	$438.15	$13,144.38	8.75	24,
GYMNASIUM	Gym	NOTHING	2733	100%	4	0	WCIR	2733	100%	4	0	$316.78	$1,267.12	0.00	
GYMNASIUM	EM/Night	LED EXIT	8766	100%	5	3	NO RETRO	8766	100%	5	3	$0.00	$0.00	0.00	
GYM S ENTRY VEST	Halls Middle & Elem	3L4T8-SP	2733	100%	3	85	2L4T8-SP-24RFL-PC	1367	50%	3	54	$56.77	$170.31	0.17	4
GYM S ENTRY VEST	Halls Middle & Elem	NOTHING	2733	100%	1	0	PHOTOCELL	2733	100%	1	0	$95.25	$95.25	0.00	
GYM EQUIPMENT 1	Supply	3L4T8-SP	2733	40%	2	85	2L4T8-SP-24RFL-OS	1913	30%	2	54	$56.77	$113.54	0.04	2
GYM EQUIPMENT 1	Supply	NOTHING	2733	40%	1	0	WSIR	2723	40%	1	0	$79.32	$79.32	0.00	
GYM EQUIPMENT 2	Supply	3L4T8-SP	2733	40%	6	85	2L4T8-SP-24RFL-OS	1913	30%	6	54	$56.77	$340.62	0.11	7
GYM EQUIPMENT 2	Supply	NOTHING	2733	40%	1	0	WSIR	2733	40%	1	0	$79.32	$79.32	0.00	
GYM N ENTRY VEST	Halls Middle & Elem	1L32CF	2733	100%	3	32	NO RETRO	2733	100%	3	32	$0.00	$0.00	0.00	
BOYS LOCKER ROOM	Class	3L4T8-SP	2880	100%	10	85	2L4T8-SP-24RFL	2880	100%	10	54	$56.77	$567.70	0.31	8
BOYS LOCKER ROOM	Class	2L4T8-SP	2880	100%	3	58	NO RETRO	2880	100%	3	58	$0.00	$0.00	0.00	
BOYS LOCKER ROOM	EM/Night	LED EXIT	8766	100%	1	3	NO RETRO	8766	100%	1	3	$0.00	$0.00	0.00	
BOYS COACH	Offices, Private	3L4T8-SP	2880	50%	2	85	2L4T8-SP-24RFL	2880	50%	2	54	$56.77	$113.54	0.03	1
BOYS COACH LOCKER	Offices, Private	3L4T8-SP	2880	50%	1	85	2L4T8-SP-24RFL	2880	50%	1	54	$56.77	$56.77	0.02	8
GIRLS LOCKER ROOM	Class	3L4T8-SP	2880	100%	7	85	2L4T8-SP-24RFL	2880	100%	7	54	$56.77	$397.39	0.22	6
GIRLS LOCKER ROOM	Class	2L4T8-SP	2880	100%	3	58	NO RETRO	2880	100%	3	58	$0.00	$0.00	0.00	
GIRLS LOCKER ROOM	EM/Night	LED EXIT	8766	100%	1	3	NO RETRO	8766	100%	1	3	$0.00	$0.00	0.00	
GIRLS COACH	Offices, Private	3L4T8-SP	2880	50%	2	85	2L4T8-SP-24RFL	2880	50%	2	54	$56.77	$113.54	0.03	1
GIRLS COACH LOCKER	Offices, Private	3L4T8-SP	2880	50%	1	85	2L4T8-SP-24RFL	2880	50%	1	54	$56.77	$56.77	0.02	8
STAIR/EXIT CORR	Halls Middle & Elem	3L4T8-SP	4163	100%	3	85	2L4T8-SP-24RFL	4163	100%	3	54	$56.77	$170.31	0.09	3
STAIR/EXIT CORR	EM/Night	3L4T8-SP-DUAL-EM	8766	100%	3	82	2L4T8-SP-24RFL-DUAL-EM	8766	100%	3	56	$152.53	$457.58	0.08	6
CHOIR CORR	Halls Middle & Elem	3L4T8-SP	4163	100%	4	85	2L4T8-SP-24RFL	4163	100%	4	54	$56.77	$227.08	0.12	5
CHOIR CORR	EM/Night	3L4T8-SP-DUAL-EM	8766	100%	2	82	2L4T8-SP-24RFL-DUAL-EM	8766	100%	2	56	$152.53	$305.05	0.05	4
CHOIR CORR	EM/Night	LED EXIT	8766	100%	1	3	NO RETRO	8766	100%	1	3	$0.00	$0.00	0.00	
KITCHEN	EM/Night	3L4T8-SP-EM	8766	100%	4	82	2L4T8-SP-24RFL-DUAL-EM	8766	100%	4	56	$152.21	$608.83	0.10	9
KITCHEN	Kitchen	3L4T8-SP	1000	100%	9	85	2L4T8-SP-24RFL	1000	100%	9	54	$56.77	$510.93	0.28	2
KITCHEN	EM/Night	LED EXIT	8766	100%	2	3	NO RETRO	8766	100%	2	3	$0.00	$0.00	0.00	
KITCHEN OFFICE	Offices, Private	3L4T8-SP	2250	50%	1	85	2L4T8-SP-24RFL-OS	1575	38%	1	54	$56.77	$56.77	0.02	1
KITCHEN OFFICE	Offices, Private	NOTHING	2250	50%	1	0	WSIR	2250	50%	1	0	$79.32	$79.32	0.00	
RR	Private RR	3L4T8-SP	2250	10%	1	85	2L4T8-SP-24RFL-OS	1575	8%	1	54	$56.77	$56.77	0.00	1
RR	Private RR	NOTHING	2250	10%	1	0	WSIR	2250	10%	1	0	$79.32	$79.32	0.00	
DRY GOODS	Kitchen	3L4T8-SP	1000	100%	2	85	2L4T8-SP-24RFL-OS	700	75%	2	54	$56.77	$113.54	0.09	9
DRY GOODS	Kitchen	NOTHING	1000	100%	1	0	WSIR	1000	100%	1	0	$79.32	$79.32	0.00	
MECH	Mechanical	2L4T8-SP	2250	10%	9	58	NO RETRO	2250	10%	9	58	$0.00	$0.00	0.00	
SCHOOL STORE	Storage	3L4T8-SP	2250	20%	4	85	2L4T8-SP-24RFL-OS	1575	15%	4	54	$56.77	$227.08	0.04	4
SCHOOL STORE	Storage	NOTHING	2250	20%	1	0	WSIR	2250	20%	1	0	$79.32	$79.32	0.00	
MUSIC ROOM	Class	3L4T8-SP-OS	2365	100%	20	82	2L4T8-SP-24RFL-OS	1656	75%	20	54	$56.77	$1,135.40	0.83	2,
MUSIC ROOM	Class	3L4T8-SP-OS	2365	100%	5	82	2L4T8-SP-24RFL-OS	1656	75%	5	54	$56.77	$283.85	0.21	5
MUSIC ROOM	EM/Night	LED EXIT	8766	100%	2	3	NO RETRO	8766	100%	2	3	$0.00	$0.00	0.00	
MUSIC OFFICE	Offices, Private	3L4T8-SP	2250	50%	2	85	2L4T8-SP-24RFL-OS	1575	38%	2	54	$56.77	$113.54	0.04	2
MUSIC OFFICE	Offices, Private	NOTHING	2250	50%	1	0	WSIR	2250	50%	1	0	$79.32	$79.32	0.00	
INSTRUMENTS	Class	3L4T8-SP	2365	100%	8	85	2L4T8-SP-24RFL-OS	1656	75%	8	54	$56.77	$454.16	0.36	8
INSTRUMENTS	Class	NOTHING	2365	100%	1	0	WCIR	2365	100%	1	0	$256.93	$256.93	0.00	
MUSIC STORAGE	Storage	3L4T8-SP	2250	20%	2	85	2L4T8-SP-24RFL-OS	1575	15%	2	54	$56.77	$113.54	0.02	2
MUSIC STORAGE	Storage	NOTHING	2250	20%	1	0	WSIR	2250	20%	1	0	$79.32	$79.32	0.00	
ELECTRIC ROOM	Mechanical	3L4T8-SP	2250	10%	1	85	2L4T8-SP-24RFL	2250	10%	1	54	$56.77	$56.77	0.00	7
MUSIC CORR	Halls Middle & Elem	3L4T8-SP	4163	100%	4	85	2L4T8-SP-24RFL	4163	100%	4	54	$56.77	$227.08	0.12	5
MUSIC CORR	EM/Night	3L4T8-SP-DUAL-EM	8766	100%	2	82	2L4T8-SP-24RFL-DUAL-EM	8766	100%	2	56	$152.53	$305.05	0.05	4
MUSIC CORR	EM/Night	LED EXIT	8766	100%	1	3	NO RETRO	8766	100%	1	3	$0.00	$0.00	0.00	
MAIN OFFICE	Common Admin	3L4T8-SP	2250	100%	15	85	2L4T8-SP-24RFL	2250	100%	15	54	$56.77	$851.55	0.47	1,
MAIN OFFICE	EM/Night	3L4T8-SP-DUAL-EM	8766	100%	3	82	2L4T8-SP-24RFL-DUAL-EM	8766	100%	3	56	$152.53	$457.58	0.08	6
MAIN OFFICE	EM/Night	LED EXIT	8766	100%	1	3	NO RETRO	8766	100%	1	3	$0.00	$0.00	0.00	
MAIN OFFICE	Common Admin	1L32CF	2250	100%	10	32	NO RETRO	2250	100%	10	32	$0.00	$0.00	0.00	
CLINIC	Common Admin	3L4T8-SP	2250	100%	6	85	NO RETRO	2250	100%	6	85	$0.00	$0.00	0.00	
CLINIC	Common Admin	2L4T8-SP	2250	100%	1	58	NO RETRO	2250	100%	1	58	$0.00	$0.00	0.00	
CUSTODIAL OFFICE	Offices, Private	3L4T8-SP	2250	50%	3	85	2L4T8-SP-24RFL-OS	1575	38%	3	54	$56.77	$170.31	0.07	3
CUSTODIAL OFFICE	Offices, Private	NOTHING	2250	50%	1	0	WSIR	2250	50%	1	0	$79.32	$79.32	0.00	
PRINCIPAL OFFICE	Offices, Private	3L4T8-SP	2250	50%	6	85	2L4T8-SP-24RFL-OS	1575	38%	6	54	$56.77	$340.62	0.13	6
PRINCIPAL OFFICE	Offices, Private	NOTHING	2250	50%	1	0	WCDT	2250	50%	1	0	$256.93	$256.93	0.00	
ELECTRIC ROOM	Mechanical	3L4T8-SP	2250	10%	4	85	2L4T8-SP-24RFL	1575	10%	4	54	$56.77	$227.08	0.01	4
WORK ROOM	Offices, Private	3L4T8-SP	2250	50%	6	85	2L4T8-SP-24RFL	2250	50%	6	54	$56.77	$340.62	0.09	4

STAFF LOUNGE	Offices, Private	3L4T8-SP	2250	50%	8	85	2L4T8-SP-24RFL-OS	1575	38%	8	54	$56.77	$454.16	0.18	8
STAFF LOUNGE	Offices, Private	NOTHING	2250	50%	1	0	WCDT	2250	50%	1	0	$256.93	$256.93	0.00	
RRS	Private RR	2L4T8-SP	2250	10%	2	58	2L4T8-SP-NR-OS	1575	8%	2	58	$0.00	$0.00	0.00	7
RRS	Private RR	NOTHING	2250	10%	2	0	WSIR	2250	10%	2	0	$79.32	$158.65	0.00	
DETENTION	Offices, Private	3L4T8-SP	2250	50%	4	85	2L4T8-SP-24RFL-OS	1575	38%	4	54	$56.77	$227.08	0.09	4
DETENTION	Offices, Private	NOTHING	2250	50%	1	0	WCDT	2250	50%	1	0	$256.93	$256.93	0.00	
RECORDS	Offices, Private	3L4T8-SP	2250	50%	4	85	2L4T8-SP-24RFL-OS	1575	38%	4	54	$56.77	$227.08	0.09	4
RECORDS	Offices, Private	NOTHING	2250	50%	1	0	WSIR	2250	50%	1	0	$79.32	$79.32	0.00	
CONFERENCE ROOM	Conference	3L4T8-SP	2250	40%	6	85	2L4T8-SP-24RFL-OS	1575	30%	6	54	$56.77	$340.62	0.11	6
CONFERENCE ROOM	Conference	NOTHING	2250	40%	1	0	CIR	2250	40%	1	0	$256.93	$256.93	0.00	
COUNSELING	Offices, Private	3L4T8-SP	2250	50%	9	85	2L4T8-SP-24RFL	2250	50%	9	54	$56.77	$510.93	0.14	6
COUNSELING	EM/Night	3L4T8-SP-DUAL-EM	8766	100%	7	82	2L4T8-SP-24RFL-DUAL-EM	8766	100%	7	56	$152.53	$1,067.68	0.18	1,:
COUNSELING	EM/Night	LED EXIT	8766	100%	2	3	NO RETRO	8766	100%	2	3	$0.00	$0.00	0.00	
COUNSELING CONF	Conference	3L4T8-SP	2250	40%	4	85	2L4T8-SP-24RFL-OS	1575	30%	4	54	$56.77	$227.08	0.07	4
COUNSELING CONF	Conference	NOTHING	2250	40%	1	0	WSDT	2250	40%	1	0	$114.31	$114.31	0.00	
COUNSELING RECORDS	Supply	2L4T8-SP	2250	40%	2	58	2L4T8-SP-NR-OS	1575	30%	2	58	$0.00	$0.00	0.01	7
COUNSELING RECORDS	Supply	NOTHING	2250	40%	1	0	WSIR	2250	40%	1	0	$79.32	$79.32	0.00	
COUNSELING OFFICE 1	Offices, Private	3L4T8-SP	2250	50%	6	85	2L4T8-SP-24RFL-OS	1575	38%	6	54	$56.77	$340.62	0.13	6
COUNSELING OFFICE 1	Offices, Private	NOTHING	2250	50%	1	0	WSDT	2250	50%	1	0	$114.31	$114.31	0.00	
COUNSELING OFFICE 2	Offices, Private	3L4T8-SP	2250	50%	6	85	2L4T8-SP-24RFL-OS	1575	38%	6	54	$56.77	$340.62	0.13	6
COUNSELING OFFICE 2	Offices, Private	NOTHING	2250	50%	1	0	WSDT	2250	50%	1	0	$114.31	$114.31	0.00	
ELEVATOR ROOM	Mechanical	2L4T8-SP	2250	10%	1	58	NO RETRO	2250	10%	1	58	$0.00	$0.00	0.00	
CLASS 113	Class	3L4T8-SP	2365	100%	19	85	2L4T8-SP-24RFL	2365	100%	19	54	$56.77	$1,078.63	0.59	1,:
STOR 113	Storage	3L4T8-SP	2250	20%	2	85	2L4T8-SP-24RFL-OS	1575	15%	2	54	$56.77	$113.54	0.02	2
STOR 113	Storage	NOTHING	2250	20%	1	0	WSIR	2250	20%	1	0	$79.32	$79.32	0.00	
TECH LAB 112	Class	3L4T8-SP-OS	2365	100%	21	82	2L4T8-SP-24RFL-OS	1656	75%	21	54	$56.77	$1,192.17	0.87	2,:
TECH OFFICE	Class	3L4T8-SP	2365	100%	3	85	2L4T8-SP-24RFL-OS	1656	75%	3	54	$56.77	$170.31	0.13	3
TECH OFFICE	Offices, Private	NOTHING	2250	50%	1	0	WSDT	2250	50%	1	0	$114.31	$114.31	0.00	
ART CLASS 111	Class	3L4T8-SP-OS	2365	100%	16	82	NO RETRO	1656	100%	16	82	$0.00	$0.00	0.00	9
ART STORAGE	Storage	3L4T8-SP	2250	20%	3	85	2L4T8-SP-24RFL-OS	1575	15%	3	54	$56.77	$170.31	0.03	3
ART STORAGE	Storage	NOTHING	2250	20%	1	0	WSIR	2250	20%	1	0	$79.32	$79.32	0.00	
ELECTRIC ROOM	Mechanical	2L4T8-SP	2250	10%	1	58	NO RETRO	2250	10%	1	58	$0.00	$0.00	0.00	
PROJECT ROOM	Storage	3L4T8-SP-DUAL	2250	20%	4	90	NO RETRO	2250	20%	4	90	$0.00	$0.00	0.00	
ART OFFICE	Offices, Private	3L4T8-SP	2250	50%	2	85	2L4T8-SP-24RFL-OS	1575	38%	2	54	$56.77	$113.54	0.04	2
ART OFFICE	Offices, Private	NOTHING	2250	50%	1	0	WSIR	2250	50%	1	0	$79.32	$79.32	0.00	
ART WORK ROOM	Class	3L4T8-SP	2365	100%	2	85	2L4T8-SP-24RFL-OS	1656	75%	2	54	$56.77	$113.54	0.09	2
ART WORK ROOM	Class	NOTHING	2365	100%	1	0	WSIR	2365	100%	1	0	$79.32	$79.32	0.00	
TECH LAB 130	Class	3L4T8-SP-OS	2365	100%	15	82	2L4T8-SP-24RFL-OS	1656	75%	15	54	$56.77	$851.55	0.62	1,:
TECH LAB 130	Class	2L4T8-SP-OS	2365	100%	2	58	NO RETRO	2365	100%	2	58	$0.00	$0.00	0.00	
TECH OFFICE	Offices, Private	3L4T8-SP	2250	50%	3	85	2L4T8-SP-24RFL-OS	1575	38%	3	54	$56.77	$170.31	0.07	3
TECH OFFICE	Offices, Private	NOTHING	2250	50%	1	0	WSIR	2250	50%	1	0	$79.32	$79.32	0.00	
ELECTRIC ROOM	Mechanical	3L4T8-SP	2250	10%	1	85	2L4T8-SP-24RFL	2250	10%	1	54	$56.77	$56.77	0.00	7
CUSTODIAL	Custodial	2L4T8-SP	2250	30%	1	58	2L4T8-SP-NR-OS	1125	23%	1	58	$0.00	$0.00	0.00	6
CUSTODIAL	Custodial	NOTHING	2250	30%	1	0	WSIR	2250	30%	1	0	$79.32	$79.32	0.00	
STAFF RR	Private RR	2L4T8-SP	2250	10%	1	58	2L4T8-SP-NR-OS	1575	8%	1	58	$0.00	$0.00	0.00	3
STAFF RR	Private RR	NOTHING	2250	10%	1	0	WSIR	2250	10%	1	0	$79.32	$79.32	0.00	
CLASS 131	Class	3L4T8-SP-OS	2365	100%	12	82	2L4T8-SP-24RFL-OS	1656	75%	12	54	$56.77	$681.24	0.50	1,:
CLASS 132	Class	3L4T8-SP-OS	2365	100%	12	82	2L4T8-SP-24RFL-OS	1656	75%	12	54	$56.77	$681.24	0.50	1,:
CLASS 132	Class	3L4T8-SP-OS	2365	100%	1	82	2L4T8-SP-24RFL-OS	1656	75%	1	54	$56.77	$56.77	0.04	1
CLASS 132	EM/Night	LED EXIT	8766	100%	1	3	NO RETRO	8766	100%	1	3	$0.00	$0.00	0.00	
SCIENCE STORAGE	Storage	3L4T8-SP	2250	20%	2	85	2L4T8-SP-24RFL-OS	1575	15%	2	54	$56.77	$113.54	0.02	2
SCIENCE STORAGE	Storage	NOTHING	2250	20%	1	0	WSIR	2250	20%	1	0	$79.32	$79.32	0.00	
SCIENCE OFFICE	Offices, Private	3L4T8-SP	2250	50%	2	85	2L4T8-SP-24RFL-OS	1575	38%	2	54	$56.77	$113.54	0.04	2
SCIENCE OFFICE	Offices, Private	NOTHING	2250	50%	1	0	WSIR	2250	50%	1	0	$79.32	$79.32	0.00	
CLASS 133	Class	3L4T8-SP-OS	2365	100%	11	82	2L4T8-SP-24RFL-OS	1656	75%	11	54	$56.77	$624.47	0.46	1,
CLASS 134	Class	3L4T8-SP-OS	2365	100%	11	82	2L4T8-SP-24RFL-OS	1656	75%	11	54	$56.77	$624.47	0.46	1,
CLASS 135	Class	3L4T8-SP-OS	2365	100%	12	82	2L4T8-SP-24RFL-OS	1656	75%	12	54	$56.77	$681.24	0.50	1,:
CLASS 137	Class	3L4T8-SP-OS	2365	100%	12	82	2L4T8-SP-24RFL-OS	1656	75%	12	54	$56.77	$681.24	0.50	1,:
TECH LAB 136	Class	3L4T8-SP	2365	100%	6	85	2L4T8-SP-24RFL-OS	1656	75%	6	54	$56.77	$340.62	0.27	6
TECH LAB 136	Class	NOTHING	2365	100%	1	0	WCDT	2365	100%	1	0	$256.93	$256.93	0.00	
TEAM WORK ROOM	Offices, Private	3L4T8-SP	2250	50%	4	85	2L4T8-SP-24RFL-OS	1575	38%	4	54	$56.77	$227.08	0.09	4
TEAM WORK ROOM	Offices, Private	NOTHING	2250	50%	1	0	WSIR	2250	50%	1	0	$79.32	$79.32	0.00	
CLASS 138	Class	3L4T8-SP-OS	2365	100%	10	82	2L4T8-SP-24RFL-OS	1656	75%	10	54	$56.77	$567.70	0.42	1,(
GIRLS RESTROOM	Halls Middle & Elem	1L32CF	4163	100%	1	32	NO RETRO	4163	100%	1	32	$0.00	$0.00	0.00	
GIRLS RESTROOM	Halls Middle & Elem	2L4T8-SP	4163	100%	8	58	2L4T8-LP	4163	100%	8	48	$32.46	$259.71	0.08	3
GIRLS RESTROOM	EM/Night	2L4T8-SP-EM	8766	100%	1	58	2L4T8-LP-DUAL-EM	8766	100%	1	50	$127.90	$127.90	0.01	7
BOYS RESTROOM	Halls Middle & Elem	1L32CF	4163	100%	1	32	NO RETRO	4163	100%	1	32	$0.00	$0.00	0.00	
BOYS RESTROOM	Halls Middle & Elem	2L4T8-SP	4163	100%	8	58	2L4T8-LP	4163	100%	8	48	$32.46	$259.71	0.08	3
BOYS RESTROOM	EM/Night	2L4T8-SP-EM	8766	100%	1	58	2L4T8-LP-DUAL-EM	8766	100%	1	50	$127.90	$127.90	0.01	7
SUPPLY ROOM	Supply	3L4T8-SP	2250	40%	1	85	2L4T8-SP-24RFL-OS	1575	30%	1	54	$56.77	$56.77	0.02	1
SUPPLY ROOM	Supply	NOTHING	2250	40%	1	0	WSIR	2250	40%	1	0	$79.32	$79.32	0.00	
DATA ROOM	Mechanical	3L4T8-SP	2250	10%	1	85	2L4T8-SP-24RFL-OS	1575	8%	1	54	$56.77	$56.77	0.00	1
DATA ROOM	Mechanical	NOTHING	2250	10%	1	0	WSIR	2250	10%	1	0	$79.32	$79.32	0.00	
SUPPLY ROOM	Supply	3L4T8-SP	2250	40%	1	85	2L4T8-SP-24RFL-OS	1575	30%	1	54	$56.77	$56.77	0.02	1
SUPPLY ROOM	Supply	NOTHING	2250	40%	1	0	WSIR	2250	40%	1	0	$79.32	$79.32	0.00	
CLASS 128	Class	3L4T8-SP-OS	2365	100%	10	82	2L4T8-SP-24RFL-OS	1656	75%	10	54	$56.77	$567.70	0.42	1,(
CLASS 127	Class	3L4T8-SP-OS	2365	100%	12	82	2L4T8-SP-24RFL-OS	1656	75%	12	54	$56.77	$681.24	0.50	1,:
CLASS 125	Class	3L4T8-SP-OS	2365	100%	12	82	2L4T8-SP-24RFL-OS	1656	75%	12	54	$56.77	$681.24	0.50	1,:
CLASS 125	Class	3L4T8-SP-OS	2365	100%	1	82	2L4T8-SP-24RFL-OS	1656	75%	1	54	$56.77	$56.77	0.04	1
CLASS 125	EM/Night	LED EXIT	8766	100%	1	3	NO RETRO	8766	100%	1	3	$0.00	$0.00	0.00	
SCIENCE STORAGE	Storage	3L4T8-SP	2250	20%	2	85	2L4T8-SP-24RFL-OS	1575	15%	2	54	$56.77	$113.54	0.02	2
SCIENCE STORAGE	Storage	NOTHING	2250	20%	1	0	WSIR	2250	20%	1	0	$79.32	$79.32	0.00	
SCIENCE OFFICE	Offices, Private	3L4T8-SP	2250	50%	2	85	2L4T8-SP-24RFL-OS	1575	38%	2	54	$56.77	$113.54	0.04	2
SCIENCE OFFICE	Offices, Private	NOTHING	2250	50%	1	0	WSIR	2250	50%	1	0	$79.32	$79.32	0.00	
CLASS 124	Class	3L4T8-SP-OS	2365	100%	11	82	2L4T8-SP-24RFL-OS	1656	75%	11	54	$56.77	$624.47	0.46	1,
CLASS 123	Class	3L4T8-SP-OS	2365	100%	11	82	2L4T8-SP-24RFL-OS	1656	75%	11	54	$56.77	$624.47	0.46	1,
CLASS 122	Class	3L4T8-SP-OS	2365	100%	12	82	2L4T8-SP-24RFL-OS	1656	75%	12	54	$56.77	$681.24	0.50	1,:
CLASS 121	Class	3L4T8-SP-OS	2365	100%	12	82	2L4T8-SP-24RFL-OS	1656	75%	12	54	$56.77	$681.24	0.50	1,:
STORAGE	Storage	3L4T8-SP	2250	20%	2	85	2L4T8-SP-24RFL-OS	1575	15%	2	54	$56.77	$113.54	0.02	2
STORAGE	Storage	NOTHING	2250	20%	1	0	WSIR	2250	20%	1	0	$79.32	$79.32	0.00	
TESTING	Offices, Private	3L4T8-SP	2250	50%	2	85	2L4T8-SP-24RFL-OS	1575	38%	2	54	$56.77	$113.54	0.04	2
TESTING	Offices, Private	NOTHING	2250	50%	1	0	WSIR	2250	50%	1	0	$79.32	$79.32	0.00	
OFFICE	Offices, Private	3L4T8-SP	2250	50%	2	85	2L4T8-SP-24RFL-OS	1575	38%	2	54	$56.77	$113.54	0.04	2
OFFICE	Offices, Private	NOTHING	2250	50%	1	0	WSIR	2250	50%	1	0	$79.32	$79.32	0.00	
TECH LAB	Class	3L4T8-SP	2365	100%	6	85	2L4T8-SP-24RFL-OS	1656	75%	6	54	$56.77	$340.62	0.27	6
TECH LAB	Class	NOTHING	2365	100%	1	0	WCDT	2365	100%	1	0	$256.93	$256.93	0.00	
TEAM WORK ROOM	Offices, Private	3L4T8-SP	2250	50%	4	85	2L4T8-SP-24RFL-OS	1575	38%	4	54	$56.77	$227.08	0.09	4
TEAM WORK ROOM	Offices, Private	NOTHING	2250	50%	1	0	WSIR	2250	50%	1	0	$79.32	$79.32	0.00	
GIRLS RESTROOM	Halls Middle & Elem	1L32CF	4163	100%	1	32	NO RETRO	4163	100%	1	32	$0.00	$0.00	0.00	
GIRLS RESTROOM	Halls Middle & Elem	2L4T8-SP	4163	100%	8	58	2L4T8-LP	4163	100%	8	48	$32.46	$259.71	0.08	3

GIRLS RESTROOM	EM/Night	2L4T8-SP-EM	8766	100%	1	58	2L4T8-LP-DUAL-EM	8766	100%	1	50	$127.90	$127.90	0.01	7
BOYS RESTROOM	Halls Middle & Elem	1L32CF	4163	100%	1	32	NO RETRO	4163	100%	1	32	$0.00	$0.00	0.00	
BOYS RESTROOM	Halls Middle & Elem	2L4T8-SP	4163	100%	8	58	2L4T8-LP	4163	100%	8	48	$32.46	$259.71	0.08	3
BOYS RESTROOM	EM/Night	2L4T8-SP-EM	8766	100%	1	58	2L4T8-LP-DUAL-EM	8766	100%	1	50	$127.90	$127.90	0.01	7
SUPPLY ROOM	Supply	3L4T8-SP	2250	40%	1	85	2L4T8-SP-24RFL-OS	1575	30%	1	54	$56.77	$56.77	0.02	1
SUPPLY ROOM	Supply	NOTHING	2250	40%	1	0	WSIR	2250	40%	1	0	$79.32	$79.32	0.00	
SUPPLY ROOM	Supply	3L4T8-SP	2250	40%	1	85	2L4T8-SP-24RFL-OS	1575	30%	1	54	$56.77	$56.77	0.02	1
SUPPLY ROOM	Supply	NOTHING	2250	40%	1	0	WSIR	2250	40%	1	0	$79.32	$79.32	0.00	
CUSTODIAL	Custodial	2L4T8-SP	2250	30%	1	58	2L4T8-SP-NR-OS	1575	23%	1	58	$0.00	$0.00	0.00	3
CUSTODIAL	Custodial	NOTHING	2250	30%	1	0	WSIR	2250	30%	1	0	$79.32	$79.32	0.00	
STAFF RR	Private RR	2L4T8-SP	2250	10%	1	58	2L4T8-SP-NR-OS	1575	8%	1	58	$0.00	$0.00	0.00	3
STAFF RR	Private RR	NOTHING	2250	10%	1	0	WSIR	2250	10%	1	0	$79.32	$79.32	0.00	
MEDIA CENTER	Library	3L4T8-SP	2365	90%	26	85	2L4T8-SP-24RFL-HIGH	2365	90%	26	54	$63.14	$1,641.69	0.73	1,1
MEDIA CENTER	Library	3L4T8-SP	2365	90%	6	85	2L4T8-SP-24RFL	2365	90%	6	54	$56.77	$340.62	0.17	4
MEDIA CENTER	Library	3L4T8-SP	2365	90%	5	85	2L4T8-SP-24RFL-PCDIM	1183	45%	5	58	$106.80	$534.00	0.25	6
MEDIA CLASS AREA	Library	3L4T8-SP	2365	90%	10	85	2L4T8-SP-24RFL-OS	1656	68%	10	54	$56.77	$567.70	0.40	1,
MEDIA CLASS AREA	Library	NOTHING	2365	90%	1	0	WCDT	2365	90%	1	0	$256.93	$256.93	0.00	
MEDIA OFFICE	Offices, Private	3L4T8-SP	2250	50%	2	85	2L4T8-SP-24RFL-OS	1575	38%	2	54	$56.77	$113.54	0.04	2
MEDIA OFFICE	Offices, Private	NOTHING	2250	50%	1	0	WSDT	2250	50%	1	0	$114.31	$114.31	0.00	
MEDIA WORK AREA	Offices, Private	3L4T8-SP	2250	50%	10	85	2L4T8-SP-24RFL-OS	1575	38%	10	54	$56.77	$567.70	0.22	1,1
MEDIA WORK AREA	Offices, Private	NOTHING	2250	50%	1	0	WCDT	2250	50%	1	0	$256.93	$256.93	0.00	
MEDIA WORK A/V STOR	Storage	3L4T8-SP	2250	20%	2	85	2L4T8-SP-24RFL	2250	20%	2	54	$56.77	$113.54	0.01	1
MECH ROOM	Mechanical	2L4T8-SP	2250	10%	10	58	NO RETRO	2250	10%	10	58	$0.00	$0.00	0.00	
MECH ROOM	EM/Night	LED EXIT	8766	100%	3	3	NO RETRO	8766	100%	3	3	$0.00	$0.00	0.00	
COMPUTER LAB	Class	3L4T8-SP-OS	2365	100%	12	82	2L4T8-SP-24RFL-OS	1656	75%	12	54	$56.77	$681.24	0.50	1,1
CLASS 211	Class	3L4T8-SP-OS	2365	100%	12	82	2L4T8-SP-24RFL-OS	1656	75%	12	54	$56.77	$681.24	0.50	1,1
CLASS 211	EM/Night	LED EXIT	8766	100%	1	3	NO RETRO	8766	100%	1	3	$0.00	$0.00	0.00	
WORK ROOM	Offices, Private	3L4T8-SP	2250	50%	4	85	2L4T8-SP-24RFL-OS	1575	38%	4	54	$56.77	$227.08	0.09	4
WORK ROOM	Offices, Private	NOTHING	2250	50%	1	0	WSDT	2250	50%	1	0	$114.31	$114.31	0.00	
CORRIDOR	Halls Middle & Elem	3L4T8-SP	4163	100%	2	85	2L4T8-SP-24RFL	4163	100%	2	54	$56.77	$113.54	0.06	2
CLASS 212	Class	3L4T8-SP-OS	2365	100%	6	82	2L4T8-SP-24RFL-OS	1656	75%	6	54	$56.77	$340.62	0.25	6
CLASS 212	Class	NOTHING	2365	100%	1	0	WCDT	2365	100%	1	0	$256.93	$256.93	0.00	
CLASS 213	Class	3L4T8-SP-OS	2365	100%	10	82	2L4T8-SP-24RFL-OS	1656	75%	10	54	$56.77	$567.70	0.42	1,1
CLASS 213	Class	3L2T8-SP-OS	2365	100%	3	45	NO RETRO	2365	100%	3	45	$0.00	$0.00	0.00	
ELECTRIC ROOM	Mechanical	3L4T8-SP	2250	10%	2	85	2L4T8-SP-24RFL	2250	10%	2	54	$56.77	$113.54	0.01	1
CLASS 214	Class	3L4T8-SP-OS	2365	100%	9	82	2L4T8-SP-24RFL-OS	1656	75%	9	54	$56.77	$510.93	0.37	9
CLASS 214	Class	3L2T8-SP-OS	2365	100%	2	45	NO RETRO	2365	100%	2	45	$0.00	$0.00	0.00	
CLASS 215	Class	3L4T8-SP-OS	2365	100%	9	82	2L4T8-SP-24RFL-OS	1656	75%	9	54	$56.77	$510.93	0.37	9
CLASS 215	Class	3L2T8-SP-OS	2365	100%	2	45	NO RETRO	2365	100%	2	45	$0.00	$0.00	0.00	
CLASS 216	Class	3L4T8-SP-OS	2365	100%	9	82	2L4T8-SP-24RFL-OS	1656	75%	9	54	$56.77	$510.93	0.37	9
CLASS 216	Class	3L2T8-SP-OS	2365	100%	2	45	NO RETRO	2365	100%	2	45	$0.00	$0.00	0.00	
CUSTODIAL / MECH	Custodial	2L4T8-SP	2250	30%	9	58	NO RETRO	2250	30%	9	58	$0.00	$0.00	0.00	
CUSTODIAL / MECH	EM/Night	LED EXIT	8766	100%	1	3	NO RETRO	8766	100%	1	3	$0.00	$0.00	0.00	
GIRLS RESTROOM	Halls Middle & Elem	1L32CF	4163	100%	1	32	NO RETRO	4163	100%	1	32	$0.00	$0.00	0.00	
GIRLS RESTROOM	Halls Middle & Elem	2L4T8-SP	4163	100%	7	58	2L4T8-LP	4163	100%	7	48	$32.46	$227.24	0.07	2
GIRLS RESTROOM	EM/Night	2L4T8-SP-EM	8766	100%	1	58	2L4T8-LP-DUAL-EM	8766	100%	1	50	$127.90	$127.90	0.01	7
BOYS RESTROOM	Halls Middle & Elem	1L32CF	4163	100%	1	32	NO RETRO	4163	100%	1	32	$0.00	$0.00	0.00	
BOYS RESTROOM	Halls Middle & Elem	2L4T8-SP	4163	100%	7	58	2L4T8-LP	4163	100%	7	48	$32.46	$227.24	0.07	2
BOYS RESTROOM	EM/Night	2L4T8-SP-EM	8766	100%	1	58	2L4T8-LP-DUAL-EM	8766	100%	1	50	$127.90	$127.90	0.01	7
STAIR	Halls Middle & Elem	3L4T8-SP	4163	100%	5	85	2L4T8-SP-24RFL	4163	100%	5	54	$56.77	$283.85	0.16	6
STAIR	EM/Night	3L4T8-SP-EM	8766	100%	1	82	2L4T8-SP-24RFL-EM	8766	100%	1	54	$152.21	$152.21	0.03	2
SINKS	Halls Middle & Elem	2L4T8-SP	4163	100%	3	58	2L4T8-LP	4163	100%	3	48	$32.46	$97.39	0.03	1
STAFF RR	Private RR	2L4T8-SP	2250	10%	1	58	2L4T8-SP-NR-OS	1575	8%	1	58	$0.00	$0.00	0.00	3
STAFF RR	Private RR	NOTHING	2250	10%	1	0	WSIR	2250	10%	1	0	$79.32	$79.32	0.00	
TEAM WORK ROOM	Offices, Private	3L4T8-SP	2250	50%	6	85	2L4T8-SP-24RFL-OS	1575	38%	6	54	$56.77	$340.62	0.13	6
TEAM WORK ROOM	Offices, Private	NOTHING	2250	50%	1	0	WSIR	2250	50%	1	0	$79.32	$79.32	0.00	
MAIN STAIR	Halls Middle & Elem	3L4T8-SP	4163	100%	3	85	2L4T8-SP-24RFL-30	4163	100%	3	54	$63.14	$189.43	0.09	3
2ND HALLS	Halls Middle & Elem	3L4T8-SP	4163	100%	3	85	2L4T8-SP-24RFL-24'	4163	100%	3	54	$63.14	$189.43	0.09	3
2ND HALLS	Halls Middle & Elem	3L4T8-SP	4163	100%	29	85	2L4T8-SP-24RFL	4163	100%	29	54	$56.77	$1,646.33	0.90	3,1
2ND HALLS	EM/Night	3L4T8-SP-EM	8766	100%	6	82	2L4T8-SP-24RFL-EM	8766	100%	6	54	$152.21	$913.24	0.17	1,1
2ND HALLS	EM/Night	LED EXIT	8766	100%	6	3	NO RETRO	8766	100%	6	3	$0.00	$0.00	0.00	
2ND DISPLAY CASE	Halls Middle & Elem	1L4T8-SP	4163	100%	3	32	1L4T8-LP	4163	100%	3	25	$30.33	$90.98	0.02	8
1ST HALLS	Halls Middle & Elem	3L4T8-SP	4163	100%	73	85	2L4T8-SP-24RFL	4163	100%	73	54	$56.77	$4,144.21	2.26	9,1
1ST HALLS	EM/Night	3L4T8-SP-EM	8766	100%	18	82	2L4T8-SP-24RFL-EM	8766	100%	18	54	$152.21	$2,739.72	0.50	4,1
1ST HALLS	EM/Night	LED EXIT	8766	100%	12	3	NO RETRO	8766	100%	12	3	$0.00	$0.00	0.00	
1ST DISPLAY CASE	Halls Middle & Elem	1L4T8-SP	4163	100%	6	32	1L4T8-LP	4163	100%	6	25	$30.33	$181.97	0.04	1
TOTALS					**1157**					**1157**			**$82,945.72**	**45.59**	**144**

* Based on ANSI wattages - to be verified by contractor
** Based on manufacturer's wattages - to be verified by contractor

BUILDING: Fraser Valley Elementary
LIGHTING CONTRACTOR: Contractor Name
ELECTRIC CONSUMPTION RATE: $0.05700 per kWh
ELECTRIC DEMAND RATE: $4.35 per kW
HEATING FUEL RATE: $8.290 per MMBtu

ECM 5.1: Lighting system upgrades

		EXISTING					PROPOSED								
AREA	USAGE TYPE	EXISTING FIXTURE DESCRIPTION	ANNUAL HOURS	Demand Div Factor	QTY	WATTS EACH*	RETROFIT DESCRIPTION	ANNUAL HOURS	Demand Div Factor	QTY	WATTS EACH**	UNIT PRICE	TOTAL EXTENDED PRICE	TOTAL KW SAVED	S/ PI
MAIN OFFICE	Offices Admin	4L4T8-LP	2271	90%	4	98	2L4T8-SP-24RFL	2271	90%	4	54	$57.23	$228.91	0.16	
NURSE	Offices Admin	4L4T8-LP	2271	90%	3	98	NO RETRO	2271	90%	3	98	$0.00	$0.00	0.00	
RESTROOM	Private RR	2L100IN	2250	10%	1	200	N2L2T8-SP-2'WL	2250	10%	1	32	$147.88	$147.88	0.02	
PRINCIPAL OFFICE	Offices, Private	4L4T8-LP	2271	50%	4	98	2L4T8-SP-24RFL-OS	1590	38%	4	54	$57.23	$228.91	0.12	
PRINCIPAL OFFICE	Offices, Private	NOTHING	2271	50%	1	0	WSIR	2271	50%	1	0	$79.32	$79.32	0.00	
FILE ROOM	Offices, Private	1L8T8-SP	2271	50%	1	70	1L8T8-SP-NR-OS	1590	38%	1	70	$0.00	$0.00	0.01	
FILE ROOM	Offices, Private	NOTHING	2271	50%	1	0	WSIR	2271	50%	1	0	$79.32	$79.32	0.00	
CONFERENCE ROOM	Conference	4L4T8-LP	2271	40%	4	98	4L4T8-LP-NR-OS	1590	30%	4	98	$0.00	$0.00	0.04	
CONFERENCE ROOM	Conference	NOTHING	2271	40%	1	0	WSIR	2271	40%	1	0	$79.32	$79.32	0.00	
WORK ROOM	Offices, Private	4L4T8-LP	2271	50%	6	98	2L4T8-SP-24RFL-OS	1590	38%	6	54	$57.23	$343.36	0.17	
WORK ROOM	Offices, Private	NOTHING	2271	50%	1	0	WCDT	2271	50%	1	0	$256.93	$256.93	0.00	
ART ROOM	Class	4L4T8-LP-OS	2365	100%	12	98	NO RETRO	2365	100%	12	98	$0.00	$0.00	0.00	
ART STORAGE	Storage	3L4T8-SP	2250	20%	2	85	3L4T8-SP-NR-OS	1575	15%	2	85	$0.00	$0.00	0.01	
ART STORAGE	Storage	NOTHING	2250	20%	1	0	WSIR	2250	20%	1	0	$79.32	$79.32	0.00	
CLASS 173	Class	3L4T8-SP-OS	2365	100%	12	82	NO RETRO	2365	100%	12	82	$0.00	$0.00	0.00	
CLASS 173 RR	Private RR	2L4T8-SP	2250	10%	1	58	NO RETRO	2250	10%	1	58	$0.00	$0.00	0.00	
CLASS 176	Class	3L4T8-SP-OS	2365	100%	12	82	NO RETRO	2365	100%	12	82	$0.00	$0.00	0.00	
CLASS 176 RR	Private RR	2L4T8-SP	2250	10%	1	58	NO RETRO	2250	10%	1	58	$0.00	$0.00	0.00	
CLASS 178	Class	3L4T8-SP-OS	2365	100%	12	82	NO RETRO	2365	100%	12	82	$0.00	$0.00	0.00	
CLASS 178 RR	Private RR	2L4T8-SP	2250	10%	1	58	NO RETRO	2250	10%	1	58	$0.00	$0.00	0.00	
CLASS 183	Class	3L4T8-SP-OS	2365	100%	12	82	NO RETRO	2365	100%	12	82	$0.00	$0.00	0.00	
CLASS 183 RR	Private RR	2L4T8-SP	2250	10%	1	58	NO RETRO	2250	10%	1	58	$0.00	$0.00	0.00	
CLASS 185	Class	3L4T8-SP-OS	2365	100%	12	82	NO RETRO	2365	100%	12	82	$0.00	$0.00	0.00	
CLASS 185 RR	Private RR	2L4T8-SP	2250	10%	1	58	NO RETRO	2250	10%	1	58	$0.00	$0.00	0.00	
CLASS 188	Class	3L4T8-SP-OS	2365	100%	12	82	NO RETRO	2365	100%	12	82	$0.00	$0.00	0.00	
CLASS 188 RR	Private RR	2L4T8-SP	2250	10%	1	58	NO RETRO	2250	10%	1	58	$0.00	$0.00	0.00	
MECH / MAINT	Mechanical	4L4T8-SP	2250	10%	3	112	NO RETRO	2250	10%	3	112	$0.00	$0.00	0.00	
MECH / MAINT	EM/Night	4L4T8-SP-EM	8766	100%	1	112	4L4T8-LP-DUAL	8766	100%	1	96	$61.15	$61.15	0.02	
CLASS 113	Class	4L4T8-LP	2455	100%	12	98	2L4T8-SP-24RFL-OS	1719	75%	12	54	$57.23	$686.72	0.69	1
CLASS 113	Class	NOTHING	2455	100%	1	0	WCDT	2455	100%	1	0	$256.93	$256.93	0.00	
CLASS 114	Class	4L4T8-LP	2455	100%	12	98	2L4T8-SP-24RFL-OS	1719	75%	12	54	$57.23	$686.72	0.69	1
CLASS 114	Class	NOTHING	2455	100%	1	0	WCDT	2455	100%	1	0	$256.93	$256.93	0.00	
CLASS 115	Class	4L4T8-LP	2455	100%	12	98	2L4T8-SP-24RFL-OS	1719	75%	12	54	$57.23	$686.72	0.69	1
CLASS 115	Class	NOTHING	2455	100%	1	0	WCDT	2455	100%	1	0	$256.93	$256.93	0.00	
CLASS 110	Class	4L4T8-LP	2455	100%	10	98	4L4T8-LP-NR-OS	1719	75%	10	98	$0.00	$0.00	0.25	
CLASS 110	Class	2L4T8-SP	2455	100%	2	58	2L4T8-LP-NR-OS	1719	75%	2	51	$0.00	$0.00	0.04	
CLASS 110	Class	NOTHING	2455	100%	1	0	WCDT	2455	100%	1	0	$256.93	$256.93	0.00	
110 SUPPLY	Supply	4L4T8-LP	2271	40%	3	98	2L4T8-SP-24RFL	2271	40%	3	54	$57.23	$171.68	0.05	
RESOURCE 111	Class	4L4T8-LP	2455	100%	8	98	2L4T8-SP-24RFL-OS	1719	75%	8	54	$57.23	$457.81	0.46	1
RESOURCE 111	Class	NOTHING	2455	100%	2	0	CIR	2455	100%	2	0	$256.93	$513.87	0.00	
RESOURCE OFFICE	Offices, Private	4L4T8-LP	2271	50%	1	98	2L4T8-SP-24RFL-OS	1590	38%	1	54	$57.23	$57.23	0.03	
RESOURCE OFFICE	Offices, Private	NOTHING	2271	50%	1	0	WSIR	2271	50%	1	0	$79.32	$79.32	0.00	
RESOURCE SUPPLY	Supply	4L4T8-LP	2271	40%	1	98	2L4T8-SP-24RFL-OS	1590	30%	1	54	$57.23	$57.23	0.02	
RESOURCE SUPPLY	Supply	NOTHING	2271	40%	1	0	WSIR	2271	40%	1	0	$79.32	$79.32	0.00	
RESOURCE CLASS	Class	4L4T8-LP	2455	100%	1	98	2L4T8-SP-24RFL-OS	1719	75%	1	54	$57.23	$57.23	0.06	
RESOURCE CLASS	Class	NOTHING	2455	100%	1	0	WSIR	1719	100%	1	0	$79.32	$79.32	0.00	
CUSTODIAL OFFICE	Offices, Private	1L8T8-SP	2271	50%	1	70	1L8T8-SP-NR-OS	1590	38%	1	70	$0.00	$0.00	0.01	
CUSTODIAL OFFICE	Offices, Private	NOTHING	2271	50%	1	0	WSIR	2271	50%	1	0	$79.32	$79.32	0.00	
CLASS 106	Class	4L4T8-LP	2455	100%	12	98	2L4T8-SP-24RFL-OS	1719	75%	12	54	$57.23	$686.72	0.69	1
CLASS 106	Class	NOTHING	2455	100%	1	0	WCDT	2455	100%	1	0	$256.93	$256.93	0.00	
CLASS 107	Class	4L4T8-LP	2455	100%	12	98	2L4T8-SP-24RFL-OS	1719	75%	12	54	$57.23	$686.72	0.69	1
CLASS 107	Class	NOTHING	2455	100%	1	0	WCDT	2455	100%	1	0	$256.93	$256.93	0.00	
CLASS 108	Class	4L4T8-LP	2455	100%	12	98	2L4T8-SP-24RFL-OS	1719	75%	12	54	$57.23	$686.72	0.69	1
CLASS 108	Class	NOTHING	2455	100%	1	0	WCDT	2455	100%	1	0	$256.93	$256.93	0.00	
BOYS RESTROOM	Halls Middle & Elem	2L4T8-LP	3646	100%	2	51	REMOVE	3646	100%	2	0	$18.56	$37.12	0.10	
BOYS RESTROOM	Halls Middle & Elem	NOTHING	3646	100%	1	0	N2L4T8-SP-8'WR	3646	100%	1	54	$161.94	$161.94	-0.05	-
GIRLS RESTROOM	Halls Middle & Elem	2L4T8-LP	3646	100%	1	51	REMOVE	3646	100%	1	0	$18.56	$18.56	0.05	
GIRLS RESTROOM	Halls Middle & Elem	NOTHING	3646	100%	1	0	N1L4T8-HP-4'WR	3646	100%	1	38	$121.87	$121.87	-0.04	-
KINDERGARTEN 109	Class	4L4T8-LP	2455	100%	14	98	2L4T8-SP-24RFL-OS	1719	75%	14	54	$57.23	$801.17	0.81	2
KINDERGARTEN 109	Class	NOTHING	2455	100%	1	0	WCDT	2455	100%	1	0	$256.93	$256.93	0.00	
RRS	Private RR	2L100IN	2250	10%	2	200	N2L2T8-SP-2'WL	2250	10%	2	32	$147.88	$295.75	0.03	
CUSTODIAL	Custodial	1L4T8-SP	2250	30%	1	32	NO RETRO	2250	30%	1	32	$0.00	$0.00	0.00	
MULTI PURPOSE ROOM	Gym	1L400HID	2523	100%	11	458	N6L4T8-HP-LNS-WG-OS	1766	75%	11	222	$438.15	$4,819.60	3.21	8
MULTI PURPOSE ROOM	Gym	2L8T8-SP	2523	100%	6	110	REMOVE	2523	100%	6	0	$19.79	$118.76	0.66	1
MULTI PURPOSE ROOM	Gym	NOTHING	2523	100%	2	0	WCIR	2523	100%	2	0	$316.78	$633.56	0.00	
KITCHEN	Kitchen	2L4T8-LP	800	100%	10	51	NO RETRO	800	100%	10	51	$0.00	$0.00	0.00	
TABLE STORAGE	Storage	2L8T8-SP	2250	20%	2	110	2L8T8-SP-NR-OS	1575	15%	2	110	$0.00	$0.00	0.01	
TABLE STORAGE	Storage	NOTHING	2250	20%	1	0	WSIR	1575	20%	1	0	$79.32	$79.32	0.00	
MECH / MAINT	Mechanical	2L8T8-SP	2250	10%	2	110	2L8T8-SP-NR-OS	1575	8%	2	110	$0.00	$0.00	0.01	
MECH / MAINT	Mechanical	NOTHING	2250	10%	1	0	WSIR	2250	10%	1	0	$79.32	$79.32	0.00	
GYM STORAGE	Storage	2L8T8-SP	2250	20%	2	110	2L8T8-SP-NR-OS	1575	15%	2	110	$0.00	$0.00	0.01	
GYM STORAGE	Storage	NOTHING	2250	20%	1	0	WSIR	2250	20%	1	0	$79.32	$79.32	0.00	
STAGE / MUSIC CLASS	Class	4L4T8-LP	2455	100%	13	98	2L4T8-SP-24RFL-OS	1719	75%	13	54	$57.23	$743.95	0.75	1
STAGE / MUSIC CLASS	Class	NOTHING	2455	100%	1	0	WCIR	2455	100%	1	0	$256.93	$256.93	0.00	
STAGE CORRIDOR	Halls Middle & Elem	4L4T8-SP	3646	100%	3	112	2L4T8-SP-24RFL	3646	100%	3	54	$57.23	$171.68	0.17	
MUSIC 195	Class	3L4T8-SP-OS	2365	100%	16	82	NO RETRO	2365	100%	16	82	$0.00	$0.00	0.00	
MUSIC 195	Class	3L2T8-SP-OS	2365	100%	2	45	NO RETRO	2365	100%	2	45	$0.00	$0.00	0.00	
MUSIC 195	EM/Night	LED EXIT	8766	100%	2	3	NO RETRO	8766	100%	2	3	$0.00	$0.00	0.00	
BOYS RESTROOM	Halls Middle & Elem	2L4T8-LP	3646	100%	2	51	REMOVE	3646	100%	2	0	$18.56	$37.12	0.10	
BOYS RESTROOM	Halls Middle & Elem	NOTHING	3646	100%	1	0	N2L4T8-SP-8'WR	3646	100%	1	54	$161.94	$161.94	-0.05	-
GIRLS RESTROOM	Halls Middle & Elem	2L4T8-LP	3646	100%	1	51	REMOVE	3646	100%	1	0	$18.56	$18.56	0.05	
GIRLS RESTROOM	Halls Middle & Elem	NOTHING	3646	100%	1	0	N1L4T8-HP-4'WR	3646	100%	1	38	$121.87	$121.87	-0.04	-
CLASS 102	Class	3L4T8-SP-OS	2365	100%	12	82	NO RETRO	2365	100%	12	82	$0.00	$0.00	0.00	

CLASS 103	Class	3L4T8-SP-OS	2365	100%	12	82	NO RETRO	2365	100%	12	82	$0.00	$0.00	0.00	
CLASS 104	Class	3L4T8-SP-OS	2365	100%	12	82	NO RETRO	2365	100%	12	82	$0.00	$0.00	0.00	
CLASS 105	Class	3L4T8-SP-OS	2365	100%	12	82	NO RETRO	2365	100%	12	82	$0.00	$0.00	0.00	
CLASS 120	Class	3L4T8-SP-OS	2365	100%	12	82	NO RETRO	2365	100%	12	82	$0.00	$0.00	0.00	
WORK ROOM	Offices, Private	3L4T8-SP	2271	50%	3	85	2L4T8-SP-24RFL	2271	50%	3	54	$56.77	$170.31	0.05	
WORK ROOM	Offices, Private	NOTHING	2271	50%	1	0	WSIR	2271	50%	1	0	$79.32	$79.32	0.00	
CLASS 101	Class	3L4T8-SP-OS	2365	100%	12	82	NO RETRO	2365	100%	12	82	$0.00	$0.00	0.00	
NEW GYM	Gym	1L250HID	2523	100%	16	295	N6L4T8-HP-LNS-WG-OS	1766	100%	16	222	$438.15	$7,010.33	1.17	5
NEW GYM	Gym	NOTHING	2523	100%	2	0	WCIR	2523	100%	2	0	$316.78	$633.56	0.00	
NEW GYM	EM/Night	LED EXIT	8766	100%	3	3	NO RETRO	8766	100%	3	3	$0.00	$0.00	0.00	
GYM STORAGE	Storage	2L4T8-SP	2250	20%	4	58	2L4T8-SP-NR-OS	1575	15%	4	58	$0.00	$0.00	0.01	
GYM STORAGE	Storage	NOTHING	2250	20%	1	0	WSIR	2250	20%	1	0	$79.32	$79.32	0.00	
WATER RISER	Mechanical	2L4T8-SP	2250	10%	1	58	2L4T8-SP-NR-OS	1575	8%	1	58	$0.00	$0.00	0.00	
WATER RISER	Mechanical	NOTHING	2250	10%	1	0	WSIR	2250	10%	1	0	$79.32	$79.32	0.00	
SHOWER	Storage	2L4T8-SP	2250	20%	1	58	NO RETRO	2250	20%	1	58	$0.00	$0.00	0.00	
COACH OFFICE	Offices, Private	3L4T8-SP	2271	50%	3	85	2L4T8-SP-24RFL	2271	50%	3	54	$56.77	$170.31	0.05	
COACH OFFICE	Offices, Private	NOTHING	2271	50%	1	0	WSIR	2271	50%	1	0	$79.32	$79.32	0.00	
GIRLS RESTROOM	Halls Middle & Elem	3L4T8-SP	3646	100%	2	85	2L4T8-SP-24RFL	3646	100%	2	54	$56.77	$113.54	0.06	
GIRLS RESTROOM	Halls Middle & Elem	2L4T8-SP	3646	100%	3	58	NO RETRO	3646	100%	3	58	$0.00	$0.00	0.00	
BOYS RESTROOM	Halls Middle & Elem	3L4T8-SP	3646	100%	2	85	2L4T8-SP-24RFL	3646	100%	2	54	$56.77	$113.54	0.06	
BOYS RESTROOM	Halls Middle & Elem	2L4T8-SP	3646	100%	3	58	NO RETRO	3646	100%	3	58	$0.00	$0.00	0.00	
CUSTODIAL	Custodial	2L4T8-SP	2250	30%	1	58	2L4T8-SP-NR-OS	1575	23%	1	58	$0.00	$0.00	0.00	
CUSTODIAL	Custodial	NOTHING	2250	30%	1	0	WSIR	2250	30%	1	0	$79.32	$79.32	0.00	
MEDIA CENTER	EM/Night	4L4T8-SP-EM	8766	100%	6	112	4L4T8-SP-NR-ADDSW	1864	100%	6	112	$0.00	$0.00	0.00	4
MEDIA CENTER	EM/Night	2L4T8-SP-EM	8766	100%	3	58	2L4T8-SP-NR-ADDSW	1864	100%	3	58	$0.00	$0.00	0.00	1
MEDIA CENTER	EM/Night	2L4T8-SP-EM	8766	100%	3	58	2L4T8-SP-PCDIM-ADDSW	932	50%	3	58	$91.41	$274.22	0.09	1
MEDIA CENTER	Library	4L4T8-SP	2000	90%	4	112	NO RETRO	2000	90%	4	112	$0.00	$0.00	0.00	
MEDIA CENTER	Library	2L4T8-SP	2000	90%	2	58	NO RETRO	2000	90%	2	58	$0.00	$0.00	0.00	
MEDIA CENTER	Library	2L4T8-SP	2000	90%	2	58	2L4T8-SP-PCDIM	1000	45%	2	58	$91.41	$182.81	0.05	
MEDIA CENTER	Library	1L32CF	2000	90%	11	32	1L32CF-NR-PC	1000	45%	11	32	$0.00	$0.00	0.16	
MEDIA CENTER	Library	1L32CF	2000	90%	4	32	NO RETRO	2000	90%	4	32	$0.00	$0.00	0.00	
MEDIA CENTER	Library	NOTHING	2000	90%	1	0	PHOTOCELL	2000	90%	1	0	$95.25	$95.25	0.00	
MEDIA CENTER	Library	2LF40-BIAX	2000	90%	14	71	NO RETRO	2000	90%	14	71	$0.00	$0.00	0.00	
MEDIA CENTER	EM/Night	LED EXIT	8766	100%	1	3	NO RETRO	8766	100%	1	3	$0.00	$0.00	0.00	
OFFICE / WORK ROOM	Offices, Private	3L4T8-SP	2271	50%	4	85	2L4T8-SP-24RFL	2271	50%	4	54	$56.77	$227.08	0.06	
OFFICE / WORK ROOM	Offices, Private	NOTHING	2271	50%	1	0	WSIR	2271	50%	1	0	$79.32	$79.32	0.00	
READING NOOK	Library	3L4T8-SP	2000	90%	4	85	2L4T8-SP-24RFL	2000	90%	4	54	$56.77	$227.08	0.11	
READING NOOK	Library	NOTHING	2000	90%	1	0	WSIR	2000	90%	1	0	$79.32	$79.32	0.00	
COMPUTER LAB	Class	3L4T8-SP-OS	2455	100%	12	82	NO RETRO	2455	100%	12	82	$0.00	$0.00	0.00	
TECH OFFICE	Offices, Private	3L4T8-SP	2271	50%	1	85	2L4T8-SP-24RFL	2271	50%	1	54	$56.77	$56.77	0.02	
TECH OFFICE	Offices, Private	NOTHING	2271	50%	1	0	WSIR	2271	50%	1	0	$79.32	$79.32	0.00	
PENTHOUSE MECH	Mechanical	2L4T8-SP	2250	10%	8	58	NO RETRO	2250	10%	8	58	$0.00	$0.00	0.00	
ELECTRICAL ROOM	Mechanical	2L4T8-SP	2250	10%	1	58	NO RETRO	2250	10%	1	58	$0.00	$0.00	0.00	
STORAGE	Storage	2L4T8-SP	2250	20%	1	58	NO RETRO	2250	20%	1	58	$0.00	$0.00	0.00	
COMMONS ATRIUM	Halls Middle & Elem	1L400HID	3646	100%	4	458	N6L4T8-HP-DEC	3646	100%	4	222	$274.11	$1,096.45	0.94	3
COMMONS ATRIUM	Halls Middle & Elem	1L400HID	3646	100%	2	458	N6L4T8-HP-DEC-PC	1823	50%	2	222	$274.11	$548.23	0.69	2
COMMONS ATRIUM	Halls Middle & Elem	NOTHING	3646	100%	1	0	PHOTOCELL	3646	100%	1	0	$95.25	$95.25	0.00	
COMMONS ATRIUM	Halls Middle & Elem	1L32CF	3646	100%	3	32	1L32CF-NR-PC	1823	50%	3	32	$0.00	$0.00	0.05	
COMMONS ATRIUM	Halls Middle & Elem	NOTHING	3646	100%	1	0	PHOTOCELL	3646	100%	1	0	$95.25	$95.25	0.00	
COMMONS ATRIUM	Halls Middle & Elem	1L32CF	3646	100%	3	32	NO RETRO	3646	100%	3	32	$0.00	$0.00	0.00	
COMMONS ATRIUM	Halls Middle & Elem	2L26CF	3646	100%	6	54	NO RETRO	3646	100%	6	54	$0.00	$0.00	0.00	
COMMONS ATRIUM	EM/Night	LED EXIT	8766	100%	2	3	NO RETRO	8766	100%	2	3	$0.00	$0.00	0.00	
HALL SOUTH	Halls Middle & Elem	2L4T8-SP	3646	100%	20	58	NO RETRO	3646	100%	20	58	$0.00	$0.00	0.00	
HALL SOUTH	Halls Middle & Elem	1L32CF	3646	100%	7	32	NO RETRO	3646	100%	7	32	$0.00	$0.00	0.00	
HALL SOUTH	EM/Night	LED EXIT	8766	100%	2	3	NO RETRO	8766	100%	2	3	$0.00	$0.00	0.00	
PE HALL	Halls Middle & Elem	2L4T8-SP	3646	100%	5	58	NO RETRO	3646	100%	5	58	$0.00	$0.00	0.00	
PE HALL	Halls Middle & Elem	1L32CF	3646	100%	6	32	1L32CF-NR-PC	1823	50%	6	32	$0.00	$0.00	0.10	
PE HALL	Halls Middle & Elem	NOTHING	3646	100%	1	0	PHOTOCELL	3646	100%	1	0	$95.25	$95.25	0.00	
PE HALL	EM/Night	LED EXIT	8766	100%	1	3	NO RETRO	8766	100%	1	3	$0.00	$0.00	0.00	
CENTER HALLS	Halls Middle & Elem	4L4T8-LP	3646	100%	26	98	2L4T8-SP-24RFL	3646	100%	26	54	$57.23	$1,487.89	1.14	4
CENTER HALLS	EM/Night	LED EXIT	8766	100%	7	3	NO RETRO	8766	100%	7	3	$0.00	$0.00	0.00	
NORTH HALLS	Halls Middle & Elem	3L4T8-SP	3646	100%	8	85	2L4T8-SP-24RFL	3646	100%	8	54	$56.77	$454.16	0.25	
NORTH HALLS	Halls Middle & Elem	2L26CF	3646	100%	12	54	NO RETRO	3646	100%	12	54	$0.00	$0.00	0.00	
NORTH HALLS	EM/Night	LED EXIT	8766	100%	1	3	NO RETRO	8766	100%	1	3	$0.00	$0.00	0.00	
MODULAR CLASS / STOR	Storage	4L4T8-SP	2250	20%	12	112	NO RETRO	2250	20%	12	112	$0.00	$0.00	0.00	
TOTALS					675					675			**$31,932.82**	**16.43**	5

* Based on ANSI wattages - to be verified by contractor
** Based on manufacturer's wattages - to be verified by contractor

BUILDING: Granby Elementary School
LIGHTING CONTRACTOR: Contractor Name
ELECTRIC CONSUMPTION RATE: $0.06600 per kWh
ELECTRIC DEMAND RATE: $4.35 per kW
HEATING FUEL RATE: $8.290 per MMBtu

ECM 5.1: Lighting system upgrades

		EXISTING					PROPOSED								
AREA	USAGE TYPE	EXISTING FIXTURE DESCRIPTION	ANNUAL HOURS	Demand Div Factor	QTY	WATTS EACH*	RETROFIT DESCRIPTION	ANNUAL HOURS	Demand Div Factor	QTY	WATTS EACH**	UNIT PRICE	TOTAL EXTENDED PRICE	TOTAL KW SAVED	S/ PI
CLASS 130	Class	3L4T8-LP-DUAL	2455	100%	13	80	3L4T8-LP-DUAL-NR-OS	1719	75%	13	80	$0.00	$0.00	0.26	
CLASS 130	Class	NOTHING	2455	100%	1	0	WCDT	2455	100%	1	0	$256.93	$256.93	0.00	
RRS	Private RR	2L2T12	2250	10%	2	49	2L2T8-LP	2250	10%	2	28	$36.24	$72.48	0.00	
CLASS 129	Class	3L4T8-LP-DUAL	2455	100%	13	80	3L4T8-LP-DUAL-NR-OS	1719	75%	13	80	$0.00	$0.00	0.26	
CLASS 129	Class	NOTHING	2455	100%	1	0	WCDT	2455	100%	1	0	$256.93	$256.93	0.00	
RRS	Private RR	2L2T12	2250	10%	2	49	2L2T8-LP	2250	10%	2	28	$36.24	$72.48	0.00	
COMPUTER LAB 128	Class	3L4T8-LP-DUAL	2455	100%	10	80	3L4T8-LP-DUAL-NR-OS	1719	75%	10	80	$0.00	$0.00	0.20	
COMPUTER LAB 129	Class	NOTHING	2455	100%	1	0	WCDT	2455	100%	1	0	$256.93	$256.93	0.00	
CLASS 139	Class	3L4T8-LP-DUAL	2455	100%	13	80	3L4T8-LP-DUAL-NR-OS	1719	75%	13	80	$0.00	$0.00	0.26	
CLASS 139	Class	NOTHING	2455	100%	1	0	WCDT	2455	100%	1	0	$256.93	$256.93	0.00	
RRS	Private RR	2L2T12	2250	10%	2	49	2L2T8-LP	2250	10%	2	28	$36.24	$72.48	0.00	
CLASS 138	Class	3L4T8-LP-DUAL	2455	100%	13	80	3L4T8-LP-DUAL-NR-OS	1719	75%	13	80	$0.00	$0.00	0.26	
CLASS 138	Class	NOTHING	2455	100%	1	0	WCDT	2455	100%	1	0	$256.93	$256.93	0.00	
RRS	Private RR	2L2T12	2250	10%	2	49	2L2T8-LP	2250	10%	2	28	$36.24	$72.48	0.00	
CLASS 137	Class	3L4T8-LP-DUAL	2455	100%	15	80	3L4T8-LP-DUAL-NR-OS	1719	75%	15	80	$0.00	$0.00	0.30	
CLASS 137	Class	NOTHING	2455	100%	1	0	WCDT	2455	100%	1	0	$256.93	$256.93	0.00	
CLASS 136	Class	3L4T8-LP-DUAL	2455	100%	15	80	3L4T8-LP-DUAL-NR-OS	1719	75%	15	80	$0.00	$0.00	0.30	
CLASS 136	Class	NOTHING	2455	100%	1	0	WCDT	2455	100%	1	0	$256.93	$256.93	0.00	
MEDIA 124	Library	3L4T8-LP	2000	90%	8	76	3L4T8-LP-NR-OS	1400	68%	8	76	$0.00	$0.00	0.14	
MEDIA 124	Library	NOTHING	2000	90%	1	0	WCDT	2000	90%	1	0	$256.93	$256.93	0.00	
MEDIA 124	Library	3L4T8-LP	2000	90%	36	76	3L4T8-LP-NR-OS	1400	68%	36	76	$0.00	$0.00	0.62	1
MEDIA 124	Library	NOTHING	2000	90%	2	0	WCDT	2000	90%	2	0	$256.93	$513.87	0.00	
MEDIA 124	EM/Night	LED EXIT	8766	100%	1	3	NO RETRO	8766	100%	1	3	$0.00	$0.00	0.00	
MEDIA SUPPLY 123	Supply	3L4T8-LP-DUAL	2000	40%	9	80	3L4T8-LP-DUAL-NR-OS	1400	30%	9	80	$0.00	$0.00	0.07	
MEDIA SUPPLY 123	Supply	NOTHING	2000	40%	1	0	WCDT	2000	40%	1	0	$256.93	$256.93	0.00	
MEDIA OFFICE 125	Offices, Private	3L4T8-LP-DUAL	2271	50%	4	80	3L4T8-LP-DUAL-NR-OS	1590	38%	4	80	$0.00	$0.00	0.04	
MEDIA OFFICE 125	Offices, Private	NOTHING	2271	50%	1	0	WCDT	2271	50%	1	0	$256.93	$256.93	0.00	
WORK ROOM 126	Offices, Private	3L4T8-LP-DUAL	2271	50%	3	80	3L4T8-LP-DUAL-NR-OS	1590	38%	3	80	$0.00	$0.00	0.03	
WORK ROOM 126	Offices, Private	NOTHING	2271	50%	1	0	WSIR-2P	2271	50%	1	0	$79.32	$79.32	0.00	
STORAGE 127	Storage	4L4T8-LP	2250	20%	1	98	2L4T8-SP-24RFL-OS	1575	15%	1	54	$57.23	$57.23	0.01	
STORAGE 127	Storage	NOTHING	2250	20%	1	0	WSIR	2250	20%	1	0	$79.32	$79.32	0.00	
RRS	Common RR	2L4T8-LP	3646	100%	8	51	NO RETRO	3646	100%	8	51	$0.00	$0.00	0.00	
RESOURCE 117	Class	3L4T8-LP-DUAL	2455	100%	7	80	3L4T8-LP-DUAL-NR-OS	1719	75%	7	80	$0.00	$0.00	0.14	
RESOURCE 117	Class	NOTHING	2455	100%	1	0	WCDT	2455	100%	1	0	$256.93	$256.93	0.00	
SUPPLY 118	Supply	3L4T8-LP	2271	40%	2	76	3L4T8-LP-NR-OS	1590	30%	2	76	$0.00	$0.00	0.02	
SUPPLY 118	Supply	NOTHING	2271	40%	1	0	WSIR	2271	40%	1	0	$79.32	$79.32	0.00	
CLASS 119	Class	3L4T8-LP	2455	100%	2	76	3L4T8-LP-NR-OS	1719	75%	2	76	$0.00	$0.00	0.04	
CLASS 119	Class	NOTHING	2455	100%	1	0	WSIR	2455	100%	1	0	$79.32	$79.32	0.00	
OFFICE 120	Offices, Private	3L4T8-LP	2271	50%	2	76	3L4T8-LP-NR-OS	1590	38%	2	76	$0.00	$0.00	0.02	
OFFICE 120	Offices, Private	NOTHING	2271	50%	1	0	WSIR	2271	50%	1	0	$79.32	$79.32	0.00	
OFFICE 116	Offices, Private	3L4T8-LP	2271	50%	2	76	3L4T8-LP-NR-OS	1590	38%	2	76	$0.00	$0.00	0.02	
OFFICE 116	Offices, Private	NOTHING	2271	50%	1	0	WSIR	2271	50%	1	0	$79.32	$79.32	0.00	
OFFICE 115	Offices, Private	3L4T8-LP	2271	50%	2	76	3L4T8-LP-NR-OS	1590	38%	2	76	$0.00	$0.00	0.02	
OFFICE 115	Offices, Private	NOTHING	2271	50%	1	0	WSIR	2271	50%	1	0	$79.32	$79.32	0.00	
OFFICE 114	Offices, Private	3L4T8-LP	2271	50%	2	76	3L4T8-LP-NR-OS	1590	38%	2	76	$0.00	$0.00	0.02	
OFFICE 114	Offices, Private	NOTHING	2271	50%	1	0	WSIR	2271	50%	1	0	$79.32	$79.32	0.00	
WOMENS STAFF RR 111	Private RR	2L4T8-LP	2250	10%	1	51	2L4T8-LP-NR-OS	1575	8%	1	51	$0.00	$0.00	0.00	
WOMENS STAFF RR 111	Private RR	NOTHING	2250	10%	1	0	WSIR	2250	10%	1	0	$79.32	$79.32	0.00	
MENS STAFF RR 110	Private RR	2L4T8-LP	2250	10%	1	51	2L4T8-LP-NR-OS	1575	8%	1	51	$0.00	$0.00	0.00	
MENS STAFF RR 110	Private RR	NOTHING	2250	10%	1	0	WSIR	2250	10%	1	0	$79.32	$79.32	0.00	
LAUNDRY 105	Custodial	2L4T8-LP	2250	30%	2	51	2L4T8-LP-NR-OS	1575	23%	2	51	$0.00	$0.00	0.01	
LAUNDRY 105	Custodial	NOTHING	2250	30%	1	0	WSIR	2250	30%	1	0	$79.32	$79.32	0.00	
ELECTRIC ROOM	Mechanical	2L4T8-LP	2250	10%	1	51	NO RETRO	2250	10%	1	51	$0.00	$0.00	0.00	
CUSTODIAL 107	Custodial	2L4T8-LP	2250	30%	1	51	2L4T8-LP-NR-OS	1575	23%	1	51	$0.00	$0.00	0.00	
CUSTODIAL 107	Custodial	NOTHING	2250	30%	1	0	WSIR	2250	30%	1	0	$79.32	$79.32	0.00	
CLASS 101	Class	3L4T8-LP-DUAL	2455	100%	15	80	3L4T8-LP-DUAL-NR-OS	1719	75%	15	80	$0.00	$0.00	0.30	
CLASS 101	Class	NOTHING	2455	100%	1	0	WCDT	2455	100%	1	0	$256.93	$256.93	0.00	
CLASS 102	Class	3L4T8-LP-DUAL	2455	100%	15	80	3L4T8-LP-DUAL-NR-OS	1719	75%	15	80	$0.00	$0.00	0.30	
CLASS 102	Class	NOTHING	2455	100%	1	0	WCDT	2455	100%	1	0	$256.93	$256.93	0.00	
CLASS 103	Class	3L4T8-LP-DUAL	2455	100%	15	80	3L4T8-LP-DUAL-NR-OS	1719	75%	15	80	$0.00	$0.00	0.30	
CLASS 103	Class	NOTHING	2455	100%	1	0	WCDT	2455	100%	1	0	$256.93	$256.93	0.00	
CLASS 104	Class	3L4T8-LP-DUAL	2455	100%	15	80	3L4T8-LP-DUAL-NR-OS	1719	75%	15	80	$0.00	$0.00	0.30	
CLASS 104	Class	NOTHING	2455	100%	1	0	WCDT	2455	100%	1	0	$256.93	$256.93	0.00	
TITLE 1	Class	3L4T8-SP	2455	100%	4	85	3L4T8-SP-NR-OS	1719	75%	4	85	$0.00	$0.00	0.09	
TITLE 1	Class	NOTHING	2455	100%	1	0	WCDT	2455	100%	1	0	$256.93	$256.93	0.00	
3RD GRADE	Class	3L4T8-SP	2455	100%	9	85	3L4T8-SP-NR-OS	1719	75%	9	85	$0.00	$0.00	0.19	
TITLE 1	Class	3L4T8-SP	2455	100%	4	85	3L4T8-SP-NR-OS	1719	75%	4	85	$0.00	$0.00	0.09	
TITLE 1	Class	NOTHING	2455	100%	1	0	WCDT	2455	100%	1	0	$256.93	$256.93	0.00	
3RD GRADE	Class	3L4T8-SP	2455	100%	9	85	3L4T8-SP-NR-OS	1719	75%	9	85	$0.00	$0.00	0.19	
3RD GRADE	Class	NOTHING	2455	100%	1	0	WCDT	2455	100%	1	0	$256.93	$256.93	0.00	
MAIN OFFICE	Common Admin	3L4T8-SP	2271	100%	4	85	NO RETRO	2271	100%	4	85	$0.00	$0.00	0.00	
MAIN OFFICE	EM/Night	LED EXIT	8766	100%	4	3	NO RETRO	8766	100%	4	3	$0.00	$0.00	0.00	
OFFICE CORRIDORS	Common Admin	4L4T8-LP	3646	100%	4	98	2L4T8-SP-24RFL	3646	100%	4	54	$57.23	$228.91	0.18	
OFFICE CORRIDORS	Common Admin	3L4T8-SP	3646	100%	3	85	NO RETRO	3646	100%	3	85	$0.00	$0.00	0.00	
NURSE	Common Admin	3L4T8-SP	3646	100%	2	85	NO RETRO	3646	100%	2	85	$0.00	$0.00	0.00	
NURSE RR	Private RR	3L4T8-SP	2250	10%	1	85	NO RETRO	2250	10%	1	85	$0.00	$0.00	0.00	
PRINCIPAL OFFICE	Offices, Private	4L4T8-LP	2271	50%	2	98	4L4T8-LP-NR-OS	1590	38%	2	98	$0.00	$0.00	0.02	
PRINCIPAL OFFICE	Offices, Private	NOTHING	2271	50%	1	0	WSDT	2271	50%	1	0	$114.31	$114.31	0.00	
CONFERENCE ROOM	Conference	4L4T8-LP	2271	40%	4	98	4L4T8-LP-NR-OS	1590	30%	4	98	$0.00	$0.00	0.04	
CONFERENCE ROOM	Conference	NOTHING	2271	40%	1	0	WSIR	2271	40%	1	0	$79.32	$79.32	0.00	
RECORDS	Common Admin	1L8T8-SP	2271	100%	1	70	1L8T8-SP-NR-OS	1590	75%	1	70	$0.00	$0.00	0.02	
RECORDS	Common Admin	NOTHING	2271	100%	1	0	WSIR	2271	100%	1	0	$79.32	$79.32	0.00	
OFFICE	Offices, Private	4L4T8-LP	2271	50%	2	98	2L4T8-SP-24RFL-OS	1590	38%	2	54	$57.23	$114.45	0.06	

OFFICE	Offices, Private	NOTHING	2271	50%	1	0	WSDT	2271	50%	1	0	$114.31	$114.31	0.00	
OFFICE	Offices, Private	4L4T8-LP	2271	50%	2	98	2L4T8-SP-24RFL-OS	1590	38%	2	54	$57.23	$114.45	0.06	
RR	Private RR	2L100IN	2271	10%	1	200	N2L2T8-SP-2'WL	2271	10%	1	32	$147.88	$147.88	0.02	
RRS	Private RR	2L100IN	2271	10%	2	200	N2L2T8-SP-2'WL	2271	10%	2	32	$147.88	$295.75	0.03	
MAINT OFFICE	Offices, Private	2L8T8-SP	2271	50%	1	110	NO RETRO	2271	50%	1	110	$0.00	$0.00	0.00	
MAIL ROOM	Offices, Private	1L8T8-SP	2271	50%	1	70	NO RETRO	2271	50%	1	70	$0.00	$0.00	0.00	
WORK ROOM	Offices, Private	4L4T8-LP	2271	50%	8	98	2L4T8-SP-24RFL-OS	1590	38%	8	54	$57.23	$457.81	0.23	1
WORK ROOM	Offices, Private	NOTHING	2271	50%	1	0	WCIR	2271	50%	1	0	$256.93	$256.93	0.00	
COUNSELLING OFFICE	Offices, Private	4L4T8-LP	2271	50%	2	98	2L4T8-SP-24RFL-OS	1590	38%	2	54	$57.23	$114.45	0.06	
COUNSELLING OFFICE	Offices, Private	NOTHING	2271	50%	1	0	WSIR	2271	50%	1	0	$79.32	$79.32	0.00	
COUNSELLING OFFICE	Offices, Private	4L4T8-LP	2271	50%	2	98	2L4T8-SP-24RFL-OS	1590	38%	2	54	$57.23	$114.45	0.06	
COUNSELLING OFFICE	Offices, Private	NOTHING	2271	50%	1	0	WSIR	2271	50%	1	0	$79.32	$79.32	0.00	
MECHANICAL	Mechanical	1L8T8-SP	2271	10%	2	70	NO RETRO	2271	10%	2	70	$0.00	$0.00	0.00	
CAFETERIA	Halls Middle & Elem	2L4T8-LP	2250	100%	34	51	2L4T8-LP-NR-OS	1575	75%	34	51	$0.00	$0.00	0.43	1
CAFETERIA	Halls Middle & Elem	NOTHING	2250	100%	2	0	WCIR	2250	100%	2	0	$256.93	$513.87	0.00	
CAFETERIA	EM/Night	LED EXIT	8766	100%	1	3	NO RETRO	8766	100%	1	3	$0.00	$0.00	0.00	
KITCHEN	Kitchen	2L4T8-LP	800	100%	12	51	NO RETRO	800	100%	12	51	$0.00	$0.00	0.00	
KIT LOCKER	Kitchen	1L4T8-SP	800	100%	1	32	NO RETRO	800	100%	1	32	$0.00	$0.00	0.00	
KITCHEN RR	Private RR	2L100IN	800	10%	1	200	N2L2T8-SP-2'WL	800	10%	1	32	$147.88	$147.88	0.02	
STOR ROOM	Storage	1L8T8-SP	800	20%	1	70	NO RETRO	800	20%	1	70	$0.00	$0.00	0.00	
RRS	Common RR	2L4T8-LP	3646	100%	5	51	REMOVE	3646	100%	5	0	$18.56	$92.81	0.26	
RRS	Common RR	NOTHING	3646	100%	2	0	N2L4T8-SP-8'WR	3646	100%	2	54	$161.94	$323.88	-0.11	-
RRS	Common RR	NOTHING	3646	100%	1	0	N1L4T8-SP-4'WR	3646	100%	1	28	$121.87	$121.87	-0.03	-
MUSIC	Class	4L4T8-LP	2455	100%	18	98	2L4T8-SP-24RFL-OS	1719	75%	18	54	$57.23	$1,030.08	1.04	2
MUSIC	Class	NOTHING	2455	100%	1	0	WCDT	2455	100%	1	0	$256.93	$256.93	0.00	
MUSIC	EM/Night	LED EXIT	8766	100%	1	3	NO RETRO	8766	100%	1	3	$0.00	$0.00	0.00	
ART	Class	4L4T8-LP	2455	100%	14	98	4L4T8-LP-NR-OS	1719	75%	14	98	$0.00	$0.00	0.34	1
ART	Class	NOTHING	2455	100%	1	0	WCDT	2455	100%	1	0	$256.93	$256.93	0.00	
ART	Class	LED EXIT	2455	100%	1	3	NO RETRO	2455	100%	1	3	$0.00	$0.00	0.00	
ART STORAGE	Storage	1L8T8-SP	2250	20%	1	70	1L8T8-SP-NR-OS	1575	15%	1	70	$0.00	$0.00	0.00	
ART STORAGE	Storage	NOTHING	2250	20%	1	0	WSIR	2250	20%	1	0	$79.32	$79.32	0.00	
PRESCHOOL	Class	4L4T8-LP	2455	100%	15	98	2L4T8-SP-24RFL-OS	1719	75%	15	54	$57.23	$858.40	0.86	2
PRESCHOOL	Class	NOTHING	2455	100%	1	0	WCDT	2455	100%	1	0	$256.93	$256.93	0.00	
RRS	Private RR	2L100IN	2250	10%	2	200	N2L2T8-SP-2'WL	2250	10%	2	32	$147.88	$295.75	0.03	
GYM	Gym	1L400HID	2330	100%	24	458	N6L4T8-HP-LNS-WG-OS	1631	75%	24	222	$438.15	$10,515.50	7.00	1(
GYM	Gym	NOTHING	2330	100%	2	0	WCIR	2330	100%	2	0	$316.78	$633.56	0.00	
GYM	EM/Night	LED EXIT	8766	100%	3	3	NO RETRO	8766	100%	3	3	$0.00	$0.00	0.00	
VESTIBULE	Halls Middle & Elem	1L100IN	3646	100%	1	100	N1L13CF-CPY	3646	100%	1	14	$87.84	$87.84	0.09	
GYM STORAGE	Storage	2L4T8-LP	2250	20%	1	51	NO RETRO	2250	20%	1	51	$0.00	$0.00	0.00	
EQUIP STORAGE	Storage	2L8T8-SP	2250	20%	7	110	2L8T8-SP-NR-OS	1575	15%	7	110	$0.00	$0.00	0.04	
EQUIP STORAGE	Storage	2L4T8-LP	2250	20%	4	51	2L4T8-LP-NR-OS	1575	15%	4	51	$0.00	$0.00	0.01	
EQUIP STORAGE	Storage	NOTHING	2250	20%	1	0	WCIR	2250	20%	1	0	$256.93	$256.93	0.00	
RRS	Common RR	2L4T8-LP	3646	100%	4	51	N1L4T8-SP-4'WR	3646	100%	4	28	$123.11	$492.42	0.09	
WORK ROOM 125	Offices, Private	2L4T8-LP	2271	50%	2	51	2L4T8-LP-NR-OS	1590	38%	2	51	$0.00	$0.00	0.01	
WORK ROOM 125	Offices, Private	NOTHING	2271	50%	1	0	WSIR	2271	50%	1	0	$79.32	$79.32	0.00	
CLASS 301	Class	3L4T8-SP-OS	2455	100%	7	82	NO RETRO	2455	100%	7	82	$0.00	$0.00	0.00	
RR	Private RR	2L4T8-SP	2250	10%	1	58	NO RETRO	2250	10%	1	58	$0.00	$0.00	0.00	
OFFICE	Offices, Private	3L4T8-SP	2271	50%	2	85	3L4T8-SP-NR-OS	1590	38%	2	85	$0.00	$0.00	0.02	
OFFICE	Offices, Private	NOTHING	2271	50%	1	0	WSIR	2271	50%	1	0	$79.32	$79.32	0.00	
CLASS 303	Class	3L4T8-SP-OS	2455	100%	7	82	NO RETRO	2455	100%	7	82	$0.00	$0.00	0.00	
CLASS 305	Class	3L4T8-SP-OS	2455	100%	12	82	NO RETRO	2455	100%	12	82	$0.00	$0.00	0.00	
RR	Private RR	2L4T8-SP	2250	10%	1	58	NO RETRO	2250	10%	1	58	$0.00	$0.00	0.00	
CLASS 307	Class	3L4T8-SP-OS	2455	100%	12	82	NO RETRO	2455	100%	12	82	$0.00	$0.00	0.00	
RR	Private RR	2L4T8-SP	2250	10%	1	58	NO RETRO	2250	10%	1	58	$0.00	$0.00	0.00	
CLASS 309	Class	3L4T8-SP-OS	2455	100%	11	82	NO RETRO	2455	100%	11	82	$0.00	$0.00	0.00	
RR	Private RR	2L4T8-SP	2250	10%	1	58	NO RETRO	2250	10%	1	58	$0.00	$0.00	0.00	
CLASS 310	Class	3L4T8-SP	2455	100%	4	85	3L4T8-SP-NR-OS	1719	75%	4	85	$0.00	$0.00	0.09	
RR	Private RR	NOTHING	2250	10%	1	0	WSDT	2250	10%	1	0	$114.31	$114.31	0.00	
CLASS 308	Class	3L4T8-SP-OS	2455	100%	15	82	NO RETRO	2455	100%	15	82	$0.00	$0.00	0.00	
RR	Private RR	2L4T8-SP	2250	10%	1	58	NO RETRO	2250	10%	1	58	$0.00	$0.00	0.00	
CLASS 306	Class	3L4T8-SP-OS	2455	100%	12	82	NO RETRO	2455	100%	12	82	$0.00	$0.00	0.00	
RR	Private RR	2L4T8-SP	2250	10%	1	58	NO RETRO	2250	10%	1	58	$0.00	$0.00	0.00	
CLASS 304	Class	3L4T8-SP-OS	2455	100%	12	82	NO RETRO	2455	100%	12	82	$0.00	$0.00	0.00	
RR	Private RR	2L4T8-SP	2250	10%	1	58	NO RETRO	2250	10%	1	58	$0.00	$0.00	0.00	
CLASS 302	Class	3L4T8-SP-OS	2455	100%	12	82	NO RETRO	2455	100%	12	82	$0.00	$0.00	0.00	
CLASS 302	Class	2LU6T8-SP-OS	2455	100%	3	58	NO RETRO	2455	100%	3	58	$0.00	$0.00	0.00	
RR	Private RR	2L4T8-SP	2250	10%	1	58	NO RETRO	2250	10%	1	58	$0.00	$0.00	0.00	
OFFICE 300	Offices, Private	3L4T8-SP	2271	50%	2	85	3L4T8-SP-NR-OS	1590	38%	2	85	$0.00	$0.00	0.02	
OFFICE 300	Offices, Private	NOTHING	2271	50%	1	0	WSIR	2271	50%	1	0	$79.32	$79.32	0.00	
HALL 300	Halls Middle & Elem	3L4T8-SP	3646	100%	10	85	2L4T8-SP-24RFL	3646	100%	10	54	$56.77	$567.70	0.31	1
HALL 300	Halls Middle & Elem	2L26CF	3646	100%	4	54	NO RETRO	3646	100%	4	54	$0.00	$0.00	0.00	
HALL 300	EM/Night	LED EXIT	8766	100%	3	3	NO RETRO	8766	100%	3	3	$0.00	$0.00	0.00	
GYM HALL	Halls Middle & Elem	2L4T8-LP	3646	100%	12	51	NO RETRO	3646	100%	12	51	$0.00	$0.00	0.00	
GYM HALL	EM/Night	LED EXIT	8766	100%	3	3	NO RETRO	8766	100%	3	3	$0.00	$0.00	0.00	
MUSIC HALLWAY	Halls Middle & Elem	4L4T8-LP	3646	100%	11	98	2L4T8-SP-24RFL	3646	100%	11	54	$57.23	$629.49	0.48	1
MUSIC HALLWAY	EM/Night	LED EXIT	8766	100%	2	3	NO RETRO	8766	100%	2	3	$0.00	$0.00	0.00	
MUSIC HALLWAY DISP	Halls Middle & Elem	2L4T8-LP	3646	100%	2	51	N1L4T8-SP-ST	3646	100%	2	28	$102.58	$205.15	0.05	
CENTER HALL	Halls Middle & Elem	2L4T8-LP	3646	100%	7	51	NO RETRO	3646	100%	7	51	$0.00	$0.00	0.00	
CENTER HALL	EM/Night	LED EXIT	8766	100%	2	3	NO RETRO	8766	100%	2	3	$0.00	$0.00	0.00	
HALL 100	Halls Middle & Elem	2L4T8-LP	3646	100%	19	51	NO RETRO	3646	100%	19	51	$0.00	$0.00	0.00	
HALL 100	EM/Night	LED EXIT	8766	100%	4	3	NO RETRO	8766	100%	4	3	$0.00	$0.00	0.00	
3RD GRADE	Class	NOTHING	2455	100%	1	0	WCDT	2455	100%	1	0	$256.93	$256.93	0.00	
KITCHEN	EM/Night	LED EXIT	8766	100%	1	3	NO RETRO	8766	100%	1	3	$0.00	$0.00	0.00	
TOTALS					**737**					**737**			**$27,061.19**	**16.62**	**4(**

* Based on ANSI wattages - to be verified by contractor
** Based on manufacturer's wattages - to be verified by contractor

BUILDING: Grand Lake Elementary
LIGHTING CONTRACTOR: Contractor Name
ELECTRIC CONSUMPTION RATE: $0.07700 per kWh
ELECTRIC DEMAND RATE: $4.35 per kW
HEATING FUEL RATE: $8.290 per MMBtu

ECM 5.1: Lighting system upgrades

		EXISTING					PROPOSED								
AREA	USAGE TYPE	EXISTING FIXTURE DESCRIPTION	ANNUAL HOURS	Demand Div Factor	QTY	WATTS EACH*	RETROFIT DESCRIPTION	ANNUAL HOURS	Demand Div Factor	QTY	WATTS EACH**	UNIT PRICE	TOTAL EXTENDED PRICE	TOTAL KW SAVED	S/ PI
MAIN OFFICE	Common Admin	4L4T8-LP	2271	100%	4	98	2L4T8-SP-24RFL	2271	100%	4	54	$57.23	$228.91	0.18	-
NURSE	Common Admin	4L4T8-LP	2271	100%	3	98	NO RETRO	2271	100%	3	98	$0.00	$0.00	0.00	
RESTROOM	Private RR	2L100IN	2250	10%	1	200	N2L2T8-SP-2'WL	2250	10%	1	32	$147.88	$147.88	0.02	
PRINCIPAL OFFICE	Private RR	4L4T8-LP	2250	10%	4	98	2L4T8-SP-24RFL-OS	1575	8%	4	54	$57.23	$228.91	0.02	
PRINCIPAL OFFICE	Private RR	NOTHING	2250	10%	1	0	WSIR	2250	10%	1	0	$79.32	$79.32	0.00	
FILE ROOM	Common Admin	1L8T8-SP	2271	100%	1	70	1L8T8-SP-NR-OS	1590	75%	1	70	$0.00	$0.00	0.02	
FILE ROOM	Common Admin	NOTHING	2271	100%	1	0	WSIR	2271	100%	1	0	$79.32	$79.32	0.00	
CONFERENCE ROOM	Conference	4L4T8-LP	2271	40%	4	98	4L4T8-LP-NR-OS	2271	30%	4	98	$0.00	$0.00	0.04	
CONFERENCE ROOM	Conference	NOTHING	2271	40%	1	0	WSIR	2271	40%	1	0	$79.32	$79.32	0.00	
WORK ROOM	Common Admin	4L4T8-LP	2271	100%	6	98	2L4T8-SP-24RFL-OS	1590	75%	6	54	$57.23	$343.36	0.35	
WORK ROOM	Common Admin	NOTHING	2271	100%	1	0	WCDT	2271	100%	1	0	$256.93	$256.93	0.00	
ART ROOM	Class	4L4T8-LP	2455	100%	12	98	NO RETRO	1864	100%	12	98	$0.00	$0.00	0.00	
ART ROOM	Class	NOTHING	2455	100%	1	0	WCDT	2455	100%	1	0	$256.93	$256.93	0.00	
CLASS INTERMEDIATE	Class	4L4T8-LP	2455	100%	12	98	2L4T8-SP-24RFL-OS	1719	75%	12	54	$57.23	$686.72	0.69	1
CLASS INTERMEDIATE	Class	NOTHING	2455	100%	1	0	WCDT	2455	100%	1	0	$256.93	$256.93	0.00	
CLASS INTERMEDIATE	Class	4L4T8-LP	2455	100%	12	98	2L4T8-SP-24RFL-OS	1719	75%	12	54	$57.23	$686.72	0.69	1
CLASS INTERMEDIATE	Class	NOTHING	2455	100%	1	0	WCDT	2455	100%	1	0	$256.93	$256.93	0.00	
CLASS 5TH	Class	4L4T8-LP	2455	100%	12	98	2L4T8-SP-24RFL-OS	1719	75%	12	54	$57.23	$686.72	0.69	1
CLASS 5TH	Class	NOTHING	2455	100%	1	0	WCDT	2455	100%	1	0	$256.93	$256.93	0.00	
MEDIA CENTER	Library	4L4T8-LP	2000	90%	10	98	4L4T8-LP-NR-OS	1400	68%	10	98	$0.00	$0.00	0.22	
MEDIA CENTER	Library	2L4T8-SP	2000	90%	2	58	2L4T8-LP-NR-OS	1400	68%	2	51	$0.00	$0.00	0.04	
MEDIA CENTER	Library	NOTHING	2000	90%	1	0	WCDT	2000	90%	1	0	$256.93	$256.93	0.00	
OFFICE / WORK ROOM	Offices, Private	4L4T8-LP	2271	50%	3	98	2L4T8-SP-24RFL	1590	50%	3	54	$57.23	$171.68	0.07	-
COMPUTER LAB	Class	4L4T8-LP	2455	100%	8	98	2L4T8-SP-24RFL-OS	1719	75%	8	54	$57.23	$457.81	0.46	1
COMPUTER LAB	Class	NOTHING	2455	100%	2	0	CIR	2455	100%	2	0	$256.93	$513.87	0.00	
RESOURCE OFFICE	Offices, Private	4L4T8-LP	2271	50%	1	98	2L4T8-SP-24RFL-OS	1590	38%	1	54	$57.23	$57.23	0.03	
RESOURCE OFFICE	Offices, Private	NOTHING	2271	50%	1	0	WSIR	2271	50%	1	0	$79.32	$79.32	0.00	
RESOURCE SUPPLY	Supply	4L4T8-LP	2271	40%	1	98	2L4T8-SP-24RFL-OS	1590	30%	1	54	$57.23	$57.23	0.02	
RESOURCE SUPPLY	Supply	NOTHING	2271	40%	1	0	WSIR	2271	40%	1	0	$79.32	$79.32	0.00	
RESOURCE CLASS	Class	4L4T8-LP	2455	100%	1	98	2L4T8-SP-24RFL-OS	1719	75%	1	54	$57.23	$57.23	0.06	
RESOURCE CLASS	Class	NOTHING	2455	100%	1	0	WSIR	2455	100%	1	0	$79.32	$79.32	0.00	
CUSTODIAL OFFICE	Offices, Private	1L8T8-SP	2271	50%	1	70	1L8T8-SP-NR-OS	1590	38%	1	70	$0.00	$0.00	0.01	
CUSTODIAL OFFICE	Offices, Private	NOTHING	2271	50%	1	0	WSIR	2271	50%	1	0	$79.32	$79.32	0.00	
CLASS PRIMARY	Class	4L4T8-LP	2455	100%	12	98	2L4T8-SP-24RFL-OS	1719	75%	12	54	$57.23	$686.72	0.69	1
CLASS PRIMARY	Class	NOTHING	2455	100%	1	0	WCDT	2455	100%	1	0	$256.93	$256.93	0.00	
CLASS PRIMARY	Class	4L4T8-LP	2455	100%	12	98	2L4T8-SP-24RFL-OS	1719	75%	12	54	$57.23	$686.72	0.69	1
CLASS PRIMARY	Class	NOTHING	2455	100%	1	0	WCDT	2455	100%	1	0	$256.93	$256.93	0.00	
CLASS PRIMARY	Class	4L4T8-LP	2455	100%	12	98	2L4T8-SP-24RFL-OS	1719	75%	12	54	$57.23	$686.72	0.69	1
CLASS PRIMARY	Class	NOTHING	2455	100%	1	0	WCDT	2455	100%	1	0	$256.93	$256.93	0.00	
BOYS RESTROOM	Halls Middle & Elem	2L4T8-LP	3646	100%	2	51	REMOVE	3646	100%	2	0	$18.56	$37.12	0.10	
BOYS RESTROOM	Halls Middle & Elem	NOTHING	3646	100%	1	0	N2L4T8-SP-8'WR	3646	100%	1	54	$161.94	$161.94	-0.05	-
GIRLS RESTROOM	Halls Middle & Elem	2L4T8-LP	3646	100%	1	51	REMOVE	3646	100%	1	0	$18.56	$18.56	0.05	
GIRLS RESTROOM	Halls Middle & Elem	NOTHING	3646	100%	1	0	N1L4T8-HP-4'WR	3646	100%	1	38	$121.87	$121.87	-0.04	-
KINDERGARTEN 109	Class	4L4T8-LP	2455	100%	14	98	2L4T8-SP-24RFL-OS	1719	75%	14	54	$57.23	$801.17	0.81	2
KINDERGARTEN 109	Class	NOTHING	2455	100%	1	0	WCDT	2455	100%	1	0	$256.93	$256.93	0.00	
RRS	Private RR	2L100IN	2250	10%	2	200	N2L2T8-SP-2'WL	2250	10%	2	32	$147.88	$295.75	0.03	
CUSTODIAL	Custodial	1L4T8-SP	2250	30%	1	32	NO RETRO	2250	30%	1	32	$0.00	$0.00	0.00	
MULTI PURPOSE ROOM	Halls Middle & Elem	1L400HID	2523	100%	11	458	N6L4T8-HP-LNS-WG-OS	1766	75%	11	222	$438.15	$4,819.60	3.21	8
MULTI PURPOSE ROOM	Halls Middle & Elem	2L8T8-SP	2523	100%	6	110	REMOVE	2523	100%	6	0	$19.79	$118.76	0.66	1
MULTI PURPOSE ROOM	Halls Middle & Elem	NOTHING	2523	100%	2	0	WCIR	2523	100%	2	0	$256.93	$513.87	0.00	
KITCHEN	Kitchen	2L4T8-LP	800	100%	10	51	NO RETRO	800	100%	10	51	$0.00	$0.00	0.00	
TABLE STORAGE	Storage	2L8T8-SP	2250	20%	2	110	2L8T8-SP-NR-OS	1590	15%	2	110	$0.00	$0.00	0.01	
TABLE STORAGE	Storage	NOTHING	2250	20%	1	0	WSIR	2250	20%	1	0	$79.32	$79.32	0.00	
MECH / MAINT	Mechanical	2L8T8-SP	2250	10%	2	110	2L8T8-SP-NR-OS	1590	8%	2	110	$0.00	$0.00	0.01	
MECH / MAINT	Mechanical	NOTHING	2250	10%	1	0	WSIR	2250	10%	1	0	$79.32	$79.32	0.00	
GYM STORAGE	Storage	2L8T8-SP	2250	20%	2	110	2L8T8-SP-NR-OS	1590	15%	2	110	$0.00	$0.00	0.01	
GYM STORAGE	Storage	NOTHING	2250	20%	1	0	WSIR	2250	20%	1	0	$79.32	$79.32	0.00	
STAGE / MUSIC CLASS	Class	4L4T8-LP	2455	100%	13	98	2L4T8-SP-24RFL-OS	1719	75%	13	54	$57.23	$743.95	0.75	1
STAGE / MUSIC CLASS	Class	NOTHING	2455	100%	1	0	WCIR	2455	100%	1	0	$256.93	$256.93	0.00	
STAGE CORRIDOR	Halls Middle & Elem	4L4T8-SP	3646	100%	3	112	2L4T8-SP-24RFL	3646	100%	3	54	$57.23	$171.68	0.17	
BOYS RESTROOM	Halls Middle & Elem	2L4T8-LP	3646	100%	2	51	REMOVE	3646	100%	2	0	$18.56	$37.12	0.10	
BOYS RESTROOM	Halls Middle & Elem	NOTHING	3646	100%	1	0	N2L4T8-SP-8'WR	3646	100%	1	54	$161.94	$161.94	-0.05	-
GIRLS RESTROOM	Halls Middle & Elem	2L4T8-LP	3646	100%	1	51	REMOVE	3646	100%	1	0	$18.56	$18.56	0.05	
GIRLS RESTROOM	Halls Middle & Elem	NOTHING	3646	100%	1	0	N1L4T8-HP-4'WR	3646	100%	1	38	$121.87	$121.87	-0.04	-
CENTER HALLS	Halls Middle & Elem	4L4T8-LP	3646	100%	26	98	2L4T8-SP-24RFL	3646	100%	26	54	$57.23	$1,487.89	1.14	4
CENTER HALLS	EM/Night	LED EXIT	8766	100%	7	3	NO RETRO	8766	100%	7	3	$0.00	$0.00	0.00	
TOTALS					**268**					**268**			**$19,635.58**	**12.58**	**30**

* Based on ANSI wattages - to be verified by contractor
** Based on manufacturer's wattages - to be verified by contractor

BUILDING: Indian Peaks Charter School
LIGHTING CONTRACTOR: Contractor Name
ELECTRIC CONSUMPTION RATE: $0.08700 per kWh
ELECTRIC DEMAND RATE: $0.00 per kW
HEATING FUEL RATE: $10.090 per MMBtu

ECM 5.1: Lighting system upgrades

		EXISTING					PROPOSED								
AREA	USAGE TYPE	EXISTING FIXTURE DESCRIPTION	ANNUAL HOURS	Demand Div Factor	QTY	WATTS EACH*	RETROFIT DESCRIPTION	ANNUAL HOURS	Demand Div Factor	QTY	WATTS EACH**	UNIT PRICE	TOTAL EXTENDED PRICE	TOTAL KW SAVED	I S/ PI
LUNCH ROOM	Kitchen	2L4T8-SP-24RFL	1600	100%	12	112	2L4T8-SP-24RFL	1600	100%	12	54	$56.31	$675.76	0.70	1
LUNCH ROOM	EM/Night	NO RETRO	8766	100%	2	3	NO RETRO	8766	100%	2	3	$0.00	$0.00	0.00	
KITCHEN	Kitchen	NO RETRO	1600	100%	6	112	NO RETRO	1600	100%	6	112	$0.00	$0.00	0.00	
MAIN OFFICE	Common Admin	NO RETRO	1600	100%	2	112	NO RETRO	1600	100%	2	112	$0.00	$0.00	0.00	
CONFERENCE ROOM	Conference	NO RETRO	1600	40%	1	112	NO RETRO	1600	40%	1	112	$0.00	$0.00	0.00	
SICK ROOM	Offices, Private	NO RETRO	1600	50%	1	112	NO RETRO	1600	50%	1	112	$0.00	$0.00	0.00	
KINDERGARTEN	Class	2L4T8-SP-24RFL	1600	100%	11	112	2L4T8-SP-24RFL	1600	100%	11	54	$56.31	$619.45	0.64	1
KINDERGARTEN	EM/Night	NO RETRO	8766	100%	1	3	NO RETRO	8766	100%	1	3	$0.00	$0.00	0.00	
1ST & 2ND GRADE	Class	2L4T8-SP-24RFL	1600	100%	12	112	2L4T8-SP-24RFL	1600	100%	12	54	$56.31	$675.76	0.70	1
1ST & 2ND GRADE	EM/Night	NO RETRO	8766	100%	1	3	NO RETRO	8766	100%	1	3	$0.00	$0.00	0.00	
RESTROOMS	Halls Middle & Elem	2L4T8-SP-24RFL	1600	100%	4	112	2L4T8-SP-24RFL	1600	100%	4	54	$56.31	$225.25	0.23	
FOREIGN LANGUAGE	Class	2L4T8-SP-24RFL	1600	100%	6	112	2L4T8-SP-24RFL	1600	100%	6	54	$56.31	$337.88	0.35	
HALLS	Halls Middle & Elem	2L4T8-SP-24RFL	1600	100%	5	112	2L4T8-SP-24RFL	1600	100%	5	54	$56.31	$281.57	0.29	
HALLS	EM/Night	NO RETRO	8766	100%	2	3	NO RETRO	8766	100%	2	3	$0.00	$0.00	0.00	
LIBRARY (WEST MOD)	Class	2L4T8-SP-24RFL	1600	100%	5	144	2L4T8-SP-24RFL	1600	100%	5	54	$56.31	$281.57	0.45	
LIBRARY	EM/Night	NO RETRO	8766	100%	1	3	NO RETRO	8766	100%	1	3	$0.00	$0.00	0.00	
3RD & 4TH GRADE	Class	2L4T8-SP-24RFL	1600	100%	6	144	2L4T8-SP-24RFL	1600	100%	6	54	$56.31	$337.88	0.54	
SPECIAL ED	Class	2L4T8-SP-24RFL	1600	100%	2	144	2L4T8-SP-24RFL	1600	100%	2	54	$56.31	$112.63	0.18	
GIRLS RESTROOM	Halls Middle & Elem	2L4T8-SP-24RFL	1600	100%	1	144	2L4T8-SP-24RFL	1600	100%	1	54	$56.31	$56.31	0.09	
BOYS RESTROOM	Halls Middle & Elem	NO RETRO	1600	100%	1	58	NO RETRO	1600	100%	1	58	$0.00	$0.00	0.00	
CORRIDOR	Halls Middle & Elem	2L4T8-SP-24RFL	1600	100%	2	144	2L4T8-SP-24RFL	1600	100%	2	54	$56.31	$112.63	0.18	
HALL (EAST MOD)	Halls Middle & Elem	NO RETRO	1600	100%	3	58	NO RETRO	1600	100%	3	58	$0.00	$0.00	0.00	
7TH & 8TH GRADE	Class	NO RETRO	1600	100%	8	58	NO RETRO	1600	100%	8	58	$0.00	$0.00	0.00	
FILE ROOM	Storage	NO RETRO	1600	20%	1	58	NO RETRO	1600	20%	1	58	$0.00	$0.00	0.00	
5TH & 6TH GRADE	Class	NO RETRO	1600	100%	12	58	NO RETRO	1600	100%	12	58	$0.00	$0.00	0.00	
5TH & 6TH GRADE	EM/Night	NO RETRO	8766	100%	1	3	NO RETRO	8766	100%	1	3	$0.00	$0.00	0.00	
TOTALS					**109**					**109**			**$3,716.69**	**4.34**	**6**

* Based on ANSI wattages - to be verified by contractor
** Based on manufacturer's wattages - to be verified by contractor

BUILDING: District Office
LIGHTING CONTRACTOR: Contractor Name
ELECTRIC CONSUMPTION RATE: $0.08700 per kWh
ELECTRIC DEMAND RATE: $0.00 per kW
HEATING FUEL RATE: $9.710 per MMBtu

ECM 5.1: Lighting system upgrades

		EXISTING					PROPOSED								
AREA	USAGE TYPE	EXISTING FIXTURE DESCRIPTION	ANNUAL HOURS	Demand Div Factor	QTY	WATTS EACH*	RETROFIT DESCRIPTION	ANNUAL HOURS	Demand Div Factor	QTY	WATTS EACH**	UNIT PRICE	TOTAL EXTENDED PRICE	TOTAL KW SAVED	S/ PI
CONFERENCE ROOM	Conference	4L4T8-LP	2000	40%	6	98	2L4T8-SP-24RFL	2000	40%	6	54	$57.23	$343.36	0.11	
CHAIMBERLIN OFFICE	Offices Admin	4L4T8-LP	2000	90%	2	98	NO RETRO	2000	90%	2	98	$0.00	$0.00	0.00	
LUND OFFICE	Offices Admin	4L4T8-LP	2000	90%	1	98	NO RETRO	2000	90%	1	98	$0.00	$0.00	0.00	
WENINGER OFFICE	Offices Admin	4L4T8-LP	2000	90%	2	98	NO RETRO	2000	90%	2	98	$0.00	$0.00	0.00	
OFFICE	Offices Admin	4L4T8-LP	2000	90%	2	98	NO RETRO	2000	90%	2	98	$0.00	$0.00	0.00	
BREAK ROOM	Offices Admin	4L4T8-LP	2000	90%	4	98	2L4T8-SP-24RFL	2000	90%	4	54	$57.23	$228.91	0.16	
SCHMIEDBAUER OFFICE	Offices Admin	4L4T8-LP	2000	90%	4	98	2L4T8-SP-24RFL	2000	90%	4	54	$57.23	$228.91	0.16	
KNOX OFFICE	Offices Admin	4L4T8-LP	2000	90%	2	98	NO RETRO	2000	90%	2	98	$0.00	$0.00	0.00	
WORK ROOM	Offices Admin	4L4T8-LP	2000	90%	2	98	NO RETRO	2000	90%	2	98	$0.00	$0.00	0.00	
SUPERINTENDANT OFFICE	Offices Admin	4L4T8-LP	2000	90%	4	98	2L4T8-SP-24RFL	2000	90%	4	54	$57.23	$228.91	0.16	
CUSTODIAL	Custodial	1L100IN	2000	30%	1	100	1L25CF	2000	30%	1	25	$14.77	$14.77	0.02	
COMMON AREA	Offices Admin	4L4T8-LP	2000	90%	15	98	2L4T8-SP-24RFL	2000	90%	15	54	$57.23	$858.40	0.59	1
COMMON AREA	Offices Admin	1L15CF-R30	2000	90%	6	15	NO RETRO	2000	90%	6	15	$0.00	$0.00	0.00	
COMMON AREA	EM/Night	LED EXIT	8766	100%	1	3	NO RETRO	8766	100%	1	3	$0.00	$0.00	0.00	
BOARD ROOM	Conference	4L4T8-LP	120	40%	15	98	NO RETRO	120	40%	15	98	$0.00	$0.00	0.00	
CORRIDOR	Conference	4L4T8-LP	760	40%	2	98	2L4T8-SP-24RFL	760	40%	2	54	$57.23	$114.45	0.04	
MENS RESTROOM	Common RR	2L4T8-LP	760	100%	1	51	NO RETRO	760	100%	1	51	$0.00	$0.00	0.00	
MENS RESTROOM	Common RR	2L2T12	760	100%	1	49	2L2T8-LP	760	100%	1	28	$36.24	$36.24	0.02	
WOMENS RESTROOM	Common RR	2L4T8-LP	760	100%	1	51	NO RETRO	760	100%	1	51	$0.00	$0.00	0.00	
WOMENS RESTROOM	Common RR	2L4T8-LP	760	100%	1	51	NO RETRO	760	100%	1	51	$0.00	$0.00	0.00	
FILE STORAGE	Storage	4L4T8-LP	2000	20%	6	98	NO RETRO	2000	20%	6	98	$0.00	$0.00	0.00	
MAINT SHOP	Offices Admin	4L4T8-LP	2200	90%	2	98	NO RETRO	2200	90%	2	98	$0.00	$0.00	0.00	
MAINT OFFICE	Offices Admin	4L4T8-LP	2200	90%	4	98	2L4T8-SP-24RFL-OS	2200	68%	4	54	$57.23	$228.91	0.21	
MAINT OFFICE	Offices Admin	NOTHING	2200	90%	1	0	WSDT	2200	90%	1	0	$114.31	$114.31	0.00	
WAREHOUSE	Warehouse	1L400HID	2200	100%	10	458	N6L4T8-HP-8'IND-OS	1540	75%	10	222	$191.39	$1,913.93	2.92	6
WAREHOUSE	Warehouse	NOTHING	2200	100%	10	0	FIXT MOUNT IR SENSOR	2200	100%	10	0	$137.24	$1,372.38	0.00	
WAREHOUSE	EM/Night	LED EXIT	8766	100%	2	3	NO RETRO	8766	100%	2	3	$0.00	$0.00	0.00	
MEZZANINE STORAGE	Storage	2L8T8-SP	760	20%	4	110	NO RETRO	760	20%	4	110	$0.00	$0.00	0.00	
TOTALS					**112**					**112**			**$5,683.46**	**4.38**	**1**

* Based on ANSI wattages - to be verified by contractor
** Based on manufacturer's wattages - to be verified by contractor

BUILDING: Transportation Facility
LIGHTING CONTRACTOR: Contractor Name
ELECTRIC CONSUMPTION RATE: $0.08700 per kWh
ELECTRIC DEMAND RATE: $0.00 per kW
HEATING FUEL RATE: $8.290 per MMBtu

ECM 5.1: Lighting system upgrades

		EXISTING					PROPOSED								
AREA	USAGE TYPE	EXISTING FIXTURE DESCRIPTION	ANNUAL HOURS	Demand Div Factor	QTY	WATTS EACH*	RETROFIT DESCRIPTION	ANNUAL HOURS	Demand Div Factor	QTY	WATTS EACH**	UNIT PRICE	TOTAL EXTENDED PRICE	TOTAL KW SAVED	K S/ PI
ENTRY VESTIBULE	Halls Middle & Elem	2L42CF	2200	100%	1	84	2L42CF-NR-OS-PC	770	38%	1	84	$0.00	$0.00	0.05	
ENTRY VESTIBULE	Halls Middle & Elem	NOTHING	2200	100%	1	0	WSIR-PC	1100	50%	1	0	$79.32	$79.32	0.00	
DRIVER LOUNGE	Common Admin	2L4T8-SP	2200	100%	4	58	2L4T8-SP-NR-OS	1540	75%	4	58	$0.00	$0.00	0.06	
DRIVER LOUNGE	Common Admin	NOTHING	2200	100%	1	0	CDT	2200	100%	1	0	$256.93	$256.93	0.00	
DRIVER LOUNGE	EM/Night	2L4T8-SP-EM	8766	100%	1	58	NO RETRO	8766	100%	1	58	$0.00	$0.00	0.00	
RRS	Private RR	2L4T8-SP	540	10%	2	58	2L4T8-SP-NR-OS	378	8%	2	58	$0.00	$0.00	0.00	
RRS	Private RR	NOTHING	540	10%	2	0	WSIR	540	10%	2	0	$79.32	$158.65	0.00	
SHOWER	Private RR	1L42CF	540	10%	1	42	NO RETRO	540	10%	1	42	$0.00	$0.00	0.00	
BUS GARAGE	Common Admin	4L4T8-SP	2200	100%	34	112	4L4T8-SP-NR-OS	1540	75%	34	112	$0.00	$0.00	0.95	2
BUS GARAGE	Common Admin	2L4T8-SP	2200	100%	6	58	2L4T8-SP-NR-OS	1540	75%	6	58	$0.00	$0.00	0.09	
BUS GARAGE	EM/Night	4L4T8-SP-EM	8766	100%	2	112	NO RETRO	8766	100%	2	112	$0.00	$0.00	0.00	
BUS GARAGE	EM/Night	2L4T8-SP-EM	8766	100%	6	58	NO RETRO	8766	100%	6	58	$0.00	$0.00	0.00	
BUS GARAGE	Common Admin	NOTHING	2200	100%	6	0	WCIR	2200	100%	6	0	$256.93	$1,541.60	0.00	
BUS GARAGE	EM/Night	LED EXIT	8766	100%	4	3	NO RETRO	8766	100%	4	3	$0.00	$0.00	0.00	
SMALL SERVICE BAY	Common Admin	1L350HID-LR	2200	100%	4	375	N6L4T8-HP-8'IND-OS	1540	75%	4	222	$191.39	$765.57	0.83	1
SMALL SERVICE BAY	Common Admin	NOTHING	2200	100%	2	0	WCDT	2200	100%	2	0	$256.93	$513.87	0.00	
SMALL SERVICE BAY	EM/Night	LED EXIT	8766	100%	1	3	NO RETRO	8766	100%	1	3	$0.00	$0.00	0.00	
BIG SERVICE BAY	Common Admin	1L350HID-LR	2200	100%	9	375	N6L4T8-HP-8'IND-OS	1540	75%	9	222	$191.39	$1,722.53	1.88	4
BIG SERVICE BAY	Common Admin	NOTHING	2200	100%	4	0	WCDT	2200	100%	4	0	$256.93	$1,027.73	0.00	
BIG SERVICE BAY	EM/Night	LED EXIT	8766	100%	1	3	NO RETRO	8766	100%	1	3	$0.00	$0.00	0.00	
SHOP OFFICE	Offices, Private	3L4T8-SP	2200	50%	2	85	3L4T8-SP-NR-OS	1540	38%	2	85	$0.00	$0.00	0.02	
SHOP OFFICE	Offices, Private	NOTHING	2200	50%	1	0	WSDT	2200	50%	1	0	$114.31	$114.31	0.00	
PARTS ROOM	Common Admin	4L4T8-SP	2200	100%	4	112	4L4T8-SP-NR-OS	1540	75%	4	112	$0.00	$0.00	0.11	
PARTS ROOM	Common Admin	NOTHING	2200	100%	1	0	WSDT	1540	100%	1	0	$114.31	$114.31	0.00	
MEZZANINE CLASS	Storage	4L4T8-SP	540	20%	8	112	NO RETRO	540	20%	8	112	$0.00	$0.00	0.00	
WASH BAY	Common Admin	4L4T8-SP	2200	100%	8	112	4L4T8-SP-NR-OS	1540	75%	8	112	$0.00	$0.00	0.22	
WASH BAY	Common Admin	NOTHING	2200	100%	2	0	WET LOC IR	2200	100%	2	0	$270.93	$541.86	0.00	
TOTALS					**118**					**118**			**$6,836.69**	**4.22**	**1(**

* Based on ANSI wattages - to be verified by contractor
** Based on manufacturer's wattages - to be verified by contractor

B. ANTICIPATED COSTS

Following is a completed open book price model that is consistent with the model included in our Technical Energy Audit Agreement with the East Grand School District. Please note that the listed figures for subcontracts are the result of a competitive process and reflect what we believe to be the low price responsive bidder for all line items.

Copies of contract schedules are also provided on the following pages for your review and reference.

District Cost & Open Book Pricing Summary

ECM Description & Fee Description	Subcontract Materials(1)	Subcontract Labor(1)	Total Subcontract Cost(1)	Direct Material Cost(2)(3)	Direct Labor Cost(4)	Contract Fees(5)
	Col A	Col B	Col C	Col D	Col E	Col F
ECM 1.1 FVES Boiler Upgrade	$ 25,733	$ 31,275	$ 57,008			
ECM 1.1 GLES Boiler Upgrade	$ 60,142	$ 28,353	$ 88,496			
ECM 3.1 MPHS Controls Upgrade	$ 4,640	$ 6,960	$ 11,600	$ 5,367	$ 12,584	
ECM 3.1 EGMS Controls Upgrade	$ 4,954	$ 7,432	$ 12,386	$ 8,402	$ 13,980	
ECM 3.1 FVES Controls Upgrade	$ 4,323	$ 6,484	$ 10,806	$ 5,733	$ 13,200	
ECM 3.1 GES Controls Upgrade	$ 4,307	$ 6,461	$ 10,768	$ 7,097	$ 11,592	
ECM 3.1 GLES Controls Upgrade	$ 5,291	$ 7,936	$ 13,227	$ 7,896	$ 13,983	
ECM 3.1 IPCS Controls Upgrade	$ 2,408	$ 3,612	$ 6,020	$ 2,827	$ 6,535	
ECM 3.1 DO Controls Upgrade	$ 2,409	$ 3,614	$ 6,023	$ 3,605	$ 6,384	
ECM 3.1 TF Controls Upgrade	$ 4,364	$ 6,546	$ 10,909	$ 3,665	$ 10,024	
ECM 4.1 FVES Unit Ventilator Upgrade	$ 27,516	$ 9,090	$ 36,606			
ECM 4.1 GLES Unit Ventilator Upgrade	$ 27,430	$ 10,081	$ 37,511			
ECM 4.2 GES HRU Installation	$ 56,992	$ 18,169	$ 75,162			
ECM 4.2 DO HRU Installation	$ 102,653	$ 22,792	$ 125,445			
ECM 4.3 DO Furnace Retrofit	$ 9,475	$ 10,336	$ 19,811			
ECM 4.4 DO Condensing Unit Retrofit	$ 7,444	$ 8,121	$ 15,564			
ECM 4.5 DO GFRH Retrofit	$ 9,449	$ 9,471	$ 18,921			
ECM 5.1 & 5.2 MPHS Lighting Fixture & Control	$ 30,935	$ 21,665	$ 52,599			
ECM 5.1 & 5.2 EGMS Lighting Fixture & Control	$ 53,500	$ 29,445	$ 82,946			
ECM 5.1 & 5.2 FVES Lighting Fixture & Control	$ 20,351	$ 11,582	$ 31,933			
ECM 5.1 & 5.2 GES Lighting Fixture & Control	$ 17,287	$ 9,774	$ 27,061			
ECM 5.1 & 5.2 GLES Lighting Fixture & Control	$ 12,252	$ 7,383	$ 19,636			
ECM 5.1 & 5.2 IPCS Lighting Fixture & Control	$ 2,304	$ 1,413	$ 3,717			
ECM 5.1 & 5.2 DO Lighting Fixture & Control	$ 3,788	$ 1,896	$ 5,683			
ECM 5.1 & 5.2 TF Lighting Fixture & Control	$ 4,416	$ 2,420	$ 6,837			
ECM 6.1 MPHS Weatherization Retrofit	$ 5,399	$ 8,099	$ 13,498			
ECM 6.1 FVES Weatherization Retrofit	$ 2,902	$ 4,354	$ 7,256			
ECM 6.1 GES Weatherization Retrofit	$ 3,022	$ 4,534	$ 7,556			
ECM 6.1 GLES Weatherization Retrofit	$ 1,244	$ 1,867	$ 3,111			
ECM 6.1 IPCS Weatherization Retrofit	$ 1,564	$ 2,346	$ 3,910			
ECM 6.1 DO Weatherization Retrofit	$ 1,104	$ 1,656	$ 2,760			
ECM 8.1 MPHS VFDs on AHU Fan Motors	$ 309	$ 2,784	$ 3,093	$ 6,751	$ 2,845	
ECM 8.1 EGMS VFDs on AHU Fan Motors	$ 232	$ 2,086	$ 2,318	$ 4,772	$ 1,521	
ECM 8.1 FVES VFDs on AHU Fan Motors	$ 232	$ 2,086	$ 2,318	$ 4,772	$ 1,521	
ECM 8.2 EGMS DCW Pump Replacement	$ 23,916	$ 10,781	$ 34,697			
ECM 12.1 FVES UPS Replacement	$ 114	$ 1,028	$ 1,143	$ 1,167	$ 257	
ECM 12.1 GLES UPS Replacement	$ 114	$ 1,028	$ 1,143	$ 1,167	$ 257	
ECM 14 GES Fire Alarm	$ 9,425	$ 9,425	$ 18,850	$ 4,083	$ 2,606	
ECM 14 GLES Fire Alarm	$ 9,147	$ 9,147	$ 18,294	$ 4,083	$ 2,606	
ECM 14 EGMS Fire Alarm	$ 25,993	$ 25,993	$ 51,985	$ 4,083	$ 2,606	
ECM 14 FVES Fire Alarm	$ 25,453	$ 25,453	$ 50,905	$ 4,083	$ 2,606	
ECM 14 MPHS Fire Alarm	$ 571	$ 571	$ 1,143	$ 4,083	$ 2,606	
Total Direct Cost	**$ 615,106**	**$ 395,550**	**$ 1,010,656**	**$ 83,636**	**$ 107,714**	**$ -**
Audit Fee						$ 37,864
Design						$ 72,120
Contingency						$ 84,140
Project Management						$ 84,140
Commissioning						$ 18,030
Training						$ 16,978
Monitoring & Verification						$ 10,075
Total Cost	**$ 615,106**	**$ 395,550**	**$ 1,010,656**	**$ 83,636**	**$ 107,714**	**$ 323,348**
Performance Bond						$ 8,337
Total Price	**$ 615,106**	**$ 395,550**	**$ 1,010,656**	**$ 83,636**	**$ 107,714**	**$ 331,685**

Notes:
1. Subcontractor Prices are based on fixed prices after competitve bid selection of the subcontractor
2. Equipment Prices are based on fixed prices after competitive bid selection of the equipment supplier (excluding Honeywell equipment) plus shipping and handling costs.
3. Equipment Prices for Honeywell Equipment are based on the GSA Schedule to be supplied by Honeywell with the Pricing Model.
4. Direct Labor Costs are based on rates shown in Pricing Model including salary and benefits.
5. Direct Fees percentages were obtained from the signed TEAPP between East Grand School District and Honeywell.
6. Honeywell overhead and profit mark-up = 22%.

Implementation Cost by Energy Conservation Measure (ECM)

ECM ID	ECM Description	Proposed First Year Annual Cost Savings	Total Investment	SPBP, yrs
1.1	Boiler plant upgrades	$23,173	$177,514	7.7
3.1	Control system upgrades	$38,133	$261,829	6.9
4.1	Unit ventilator replacement	$0	$90,422	N/A
4.2	HRU system installation	$0	$244,740	N/A
4.3	Furnace installation	$0	$24,170	N/A
4.4	Condensing unit replacement	$0	$18,988	N/A
4.5	GFRH installation	$0	$23,083	N/A
5.1	Lighting fixture & lighting controls retrofit	$36,189	$281,102	7.8
6.1	Window and door weatherization	$5,275	$46,471	8.8
8.1	Add VFD's to AHU Fan Motors	$4,922	$36,492	7.4
8.2	DCW pump replacement	$2,000	$42,331	21.2
12.1	Uninterruptible power supply replacement	$500	$6,264	12.5
14.0	Fire Alarm Upgrade	$7,800	$213,040	27.3
	Total For All Measures:	$117,992	$1,466,446	12.4

Proposed First Year Annual Cost Savings

ECM	ECM Energy Baseline MMBtu/yr	Electric Energy Savings kWh/yr	Electric Demand Savings kW/yr	Electric Energy Savings	Gas Savings MMBtu/yr	Gas Savings	O & M Savings	Total Savings	Total Cost	Simple Payvback	Est CO_2 Emmissions Reduction lb/yr
Mechanical Scope Of Work											
ECM 1.1 Boiler Upgrades	958	0	0	$0	50	$373	$22,800	$23,173	$177,514	7.7	5,855
ECM 4.1 Unit Ventilator Replacement	0	0	0	$0	0	$0	$0	$0	$90,422	N/A	0
ECM 4.2 HRU installation	0	0	0	$0	0	$0	$0	$0	$244,740	N/A	0
ECM 4.3Furnace installation	0	0	0	$0	0	$0	$0	$0	$24,170	N/A	0
ECM 4.4 Condensing unit replacement	0	0	0	$0	0	$0	$0	$0	$18,988	N/A	0
ECM 4.5 GFRH installation	0	0	0	$0	0	$0	$0	$0	$23,083	N/A	0
ECM 8.2 DCW Pump Replacement	0	0	0	$0	0	$0	$2,000	$2,000	$42,331	21.2	0
Totals:	**958**	**0**	**0**	**$0**	**50**	**$373**	**$24,800**	**$25,173**	**$621,248**	**24.7**	**5,855**
Control System Scope Of Work											
ECM 3.1 Control System Upgrades	24,274	223,459	-63	$12,173	2,294	$17,359	$8,600	$38,133	$261,829	6.9	689,401
ECM 8.1 Install VFD's	386	92,234	0	$4,922	0	$0	$0	$4,922	$36,492	7.4	173,677
ECM 12.1 Uninterruptible Power Supply	0	0	0	$0	0	$0	$500	$500	$6,264	12.5	0
Totals:	**24,660**	**315,693**	**-63**	**$17,096**	**2,294**	**$17,359**	**$9,100**	**$43,555**	**$304,585**	**7.0**	**863,077**
Lighting Scope Of Work											
ECM 5.1 Lighting Fixture/Controls Retrofit	**3,666**	**417,168**	**1,631**	**$31,057**	**-221**	**-$1,868**	**$7,000**	**$36,189**	**$281,102**	**7.8**	**759,648**
Weatherization Scope Of Work											
ECM 6.1 Window & Door Weatherization	**1,463**	**0**	**0**	**$0**	**393**	**$2,975**	**$2,300**	**$5,375**	**$46,471**	**8.6**	**46,020**
Fire Alarm & Instant Alert	**0**	**0**	**0**	**$0**		**$0**	**$7,800**	**$7,500**	**$213,040**	**28.4**	**0**
TOTALS:	**30,747**	**732,861**	**1,568**	**$48,153**	**2,516**	**$18,839**	**$51,000**	**$117,792**	**$1,466,446**	**12.4**	**1,674,601**
Project SF:	**378,641**										
Total Energy Savings:	**13.3 kBtu/SF**										

Notes:
1). Project size (SF) includes only building square footage affected by installed ECM's in project.
2). Conversion factors for CO_2 reduction (lbs): 1.883 lb/kWh; 117.1 lb/MMBtu

Cash Flow

Year	Savings			District Costs -- assuming level lease payments				District Costs -- graduated level lease payments [using construction period savings (year 0) in year 1]			
	Energy	O&M	Total	Level Lease Payments	Service	Total	Annual Net to EGSD	Graduated Lease Payments	Service	Total	Annual Net to EGSD
0	$ 16,748	$ -	$ 16,748	$ -	$ -	$ -	$ 16,748	$ -	$ -	$ -	$ -
1	$ 66,992	$ 51,000	$ 117,992	$ 120,802	$ 13,500	$ 134,302	$ (16,310)	$ 111,832	$ 13,500	$ 125,332	$ 9,409
2	$ 69,840	$ 52,530	$ 122,370	$ 120,802	$ 13,973	$ 134,774	$ (12,405)	$ 99,451	$ 13,973	$ 113,424	$ 8,946
3	$ 72,808	$ 54,106	$ 126,914	$ 120,802	$ 14,462	$ 135,263	$ (8,350)	$ 103,199	$ 14,462	$ 117,661	$ 9,253
4	$ 75,902	$ 55,729	$ 131,631	$ 120,802	$ 14,968	$ 135,770	$ (4,138)	$ 107,093	$ 14,968	$ 122,060	$ 9,571
5	$ 79,128	$ 57,401	$ 136,529	$ 120,802	$ 15,492	$ 136,293	$ 235	$ 111,137	$ 15,492	$ 126,629	$ 9,900
6	$ 82,491	$ 58,099	$ 140,590	$ 120,802	$ 16,034	$ 136,836	$ 3,754	$ 114,342	$ 16,034	$ 130,376	$ 10,213
7	$ 85,997	$ 58,751	$ 144,748	$ 120,802	$ 16,595	$ 137,397	$ 7,351	$ 117,704	$ 16,595	$ 134,299	$ 10,449
8	$ 89,652	$ 59,551	$ 149,202	$ 120,802	$ 17,176	$ 137,978	$ 11,225	$ 121,229	$ 17,176	$ 138,405	$ 10,798
9	$ 93,462	$ 60,397	$ 153,859	$ 120,802	$ 17,777	$ 138,579	$ 15,280	$ 124,923	$ 17,777	$ 142,700	$ 11,159
10	$ 97,434	$ 61,293	$ 158,727	$ 120,802	$ 18,399	$ 139,201	$ 19,526	$ 128,793	$ 18,399	$ 147,193	$ 11,534
11	$ 101,575	$ 62,239	$ 163,814	$ 120,802	$ 19,043	$ 139,845	$ 23,969	$ 132,847	$ 19,043	$ 151,890	$ 11,923
12	$ 105,892	$ 63,236	$ 169,128	$ 120,802	$ 19,710	$ 140,511	$ 28,616	$ 137,092	$ 19,710	$ 156,802	$ 12,326
13	$ 110,392	$ 64,287	$ 174,679	$ 120,802	$ 20,399	$ 141,201	$ 33,478	$ 141,535	$ 20,399	$ 161,935	$ 12,744
14	$ 115,084	$ 65,392	$ 180,476	$ 120,802	$ 21,113	$ 141,915	$ 38,561	$ 146,185	$ 21,113	$ 167,299	$ 13,177
15	$ 119,975	$ 66,554	$ 186,529	$ 120,802	$ 21,852	$ 142,654	$ 43,875	$ 151,050	$ 21,852	$ 172,903	$ 13,626
16	$ 125,074	$ 58,557	$ 183,631	$ 120,802	$ 22,617	$ 143,419	$ 40,212	$ 154,576	$ 22,617	$ 177,193	$ 6,438
17	$ 130,389	$ 58,008	$ 188,398	$ 120,802	$ 23,409	$ 144,211	$ 44,187	$ 158,318	$ 23,409	$ 181,727	$ 6,671
18	$ 135,931	$ 52,324	$ 188,255	$ 120,802	$ 24,228	$ 145,030	$ 43,225	$ 157,178	$ 24,228	$ 181,406	$ 6,849
19	$ 141,708	$ 46,644	$ 188,352	$ 120,802	$ 25,076	$ 145,878	$ 42,474	$ 156,238	$ 25,076	$ 181,314	$ 7,038
20	$ 147,731	$ 40,966	$ 188,697	$ 120,802	$ 25,954	$ 146,756	$ 41,941	$ 155,505	$ 25,954	$ 181,459	$ 7,238
	$ 2,064,203	**$ 1,147,064**	**$ 3,211,267**	**$ 2,416,038**	**$ 381,776**	**$ 2,797,814**	**$ 413,454**	**$ 2,630,230**	**$ 381,776**	**$ 3,012,005**	**$ 199,262**
			Total interest cost	**$ 1,008,637**				**$ 1,222,829**			

C. PROPOSED FINANCING STRUCTURE

We anticipate a traditional construction percent of completion payment method during the construction period, beginning with mobilization payment. Monthly payment requests during the construction period will, of course, include all of the necessary documentation to confirm percent completion and the amount of the payment request. Conditional progress lien waivers will be provided with each invoice, stating that we will waive our lien rights in the amount of payments actually received.

A preliminary payment schedule was developed. This draw schedule is provided on the following page for your review and reference.

We have also attached a sample schedule of values following the draw schedule.

Preliminary payment schedule:

Note: This is an initial forecast of monthly progress billing based on a preliminary project installation schedule. Customer will be billed based on actual progress of the work completed each month.

Year / Month		Work Completed		% Invoiced	$ Invoiced		% Invoice To Date	$ Invoiced to Date
2008								
Jun		Mobilization, TEA, Procurement		20	$ 372,554		20	$ 372,554
Jul		Design, Procurement, Permitting		5	$ 93,139		25	$ 465,693
Aug		Design, Procurement, Installation		10	$ 186,277		35	$ 651,970
Sep		Procurement, Installation		10	$ 186,277		45	$ 838,247
Oct		Installation		10	$ 186,277		55	$ 1,024,524
Nov		Installation		10	$ 186,277		65	$ 1,210,801
Dec		Installation		10	$ 186,277		75	$ 1,397,078
2009								
Jan		Installation, Commissioning		5	$ 93,139		80	$ 1,490,217
Feb		Installation, Commissioning		5	$ 93,139		85	$ 1,583,355
Mar		Commissioning, Training		5	$ 93,139		90	$ 1,676,494
Apr		Punchlist, Substantial Completion		5	$ 93,139		95	$ 1,769,632
May		Final Completion		5	$ 93,139		100	$ 1,862,771
		Total		100	$1,862,771			

6. MISCELLANEOUS

A. DESCRIPTION OF SAVINGS GUARANTEE

Guarantee Savings. Honeywell guarantees to Customer that the identified Facilities will realize the total energy cost avoidance through the combined value of all ECMs over the Term of the contract.

Additional Savings after Final Project Acceptance. Additional energy cost avoidance, including any utility rebates or other incentives that can be demonstrated, or earned, as a result of Honeywell's efforts that result in no additional costs to Customer beyond the costs identified in this Agreement will be included in the guarantee savings reconciliation report for the applicable Guarantee Year(s).

Accumulation of Savings. The Savings Guarantee in each year of the performance period shall be considered satisfied if the savings in that year, as documented in the annual Measurement and Verification Report accepted by the School District, is equal to or greater than the amount presented in the Contract Schedule for that year.

Excess Savings. In the event that the Total Guarantee Year Savings in any Guarantee year exceed the Guaranteed Savings required for that Guarantee Year, such Excess Savings shall be retained by the customer. Annual excess savings may not carried forward and applied against Guaranteed Savings shortfalls in any future Guarantee Year pursuant to the Colorado Governor's Energy Office guidelines.

Savings Shortfalls. In the event that the Total Guarantee Year Savings in any year of the Performance Period are less than the amount presented in the Contract Schedule for that year, Contractor shall compensate Facility Owner by making payment to Facility Owner for the amount of the savings shortfall within forty-five (45) days of demand by Facility Owner for such payment.

Aggregation of Savings. The parties mutually agree that the Guarantee Savings for this Agreement is the aggregate sum of savings of all ECMs combined. Any potential savings shortfall shall be based on this aggregated sum, and not by individual ECM. Throughout the duration of the term of the contract, the total savings will be utilized as an aggregate in satisfying the savings guarantee.

Savings Reconciliation Documentation. Honeywell will provide Customer with an Annual Measurement & Verification Report after each year of the Performance Period. Customer will assist Honeywell in generating the savings reconciliation report by providing Honeywell with timely data records as outlined under Customer responsibility for the ECMs that cannot be automatically monitored and trended via building automation systems together with access to relevant records relating to the buildings, equipment associated with the project ECMs. Customer will also assist Honeywell by permitting access to any maintenance records, drawings, or other data deemed necessary by Honeywell to generate the said report. Data and calculations utilized by Honeywell in the preparation of its guarantee cost savings reconciliation report will be made available to Customer, along with such explanations and clarifications as Customer may reasonably request.

Acceptance of Guarantee Reconciliation. At the end of each year of the Performance Period Customer will have forty-five (45) days to review the Annual Measurement & Verification Report and provide written notice to Honeywell of non-acceptance of the Guarantee Savings for that Guarantee year. Failure to provide written notice within forty-five (45) days of the receipt of the guarantee savings reconciliation report will deem it accepted by Customer. In addition, the M&V report will be submitted to the Colorado GEO's office each year for their review.

Guarantee Savings Reconciliation. Guarantee Savings will be determined in accordance with the methodology(s), operating parameters, formulas, and constants as described in contract documents and incorporated attachments, and/or additional methodologies defined by Honeywell that may be negotiated with Customer at any time.

Guarantee Savings reconciliation will be based on the M&V Methodologies as detailed in the contract document and in this Technical Energy Audit report. The M&V Methodologies employed have been negotiated and agreed to by the School District. Honeywell shall not be responsible to acquire, read, record, measure or analyze any control point data, parameters, equipment details or system operating details not explicitly listed, outlined or described in the contract M&V plan, nor for any such data under the responsibility of Customer.

Measurement & Verification Activities, M&V activities for this project generally follow Option A and Option B Methodologies of the International Performance Measurement and Verification Protocol ("IPMVP"), 1997 version.

A summary of the M&V Methodologies and the data we will be using for baseline establishment and savings calculations is provided in sub-section "*d. M&V Plan*" below.

B. USEFUL LIFE OF EQUIPMENT

Guarantee Savings.

Data presented below was obtained from 2007 ASHRAE Handbook - HVAC Applications, Chapter 36 and Appendix B, Table B-6 of an April 2006 FEMP study on sustainable buildings:

Energy Conservation Measure ("ECM")		Useful Life (years)	Weighted Life (years)	Comments
1.1	Boiler Plant Upgrades	30	3.6	
3.1	Control System Upgrade	15	2.7	
4.1	Unit Ventilator Replacement	20	1.2	
4.2	Heat Recovery System Installation	25	4.2	
4.3	Furnace Installation	18	0.3	
4.4	Condensing Unit Replacement	15	0.2	
4.5	Gas Fired Radiant Heater Installation	15	0.2	
5.1a	Lighting Fixture Retrofit	25	4.1	Fixture life listed. Ballast & lamp replacement are standard maintenance items, not life-cycle consideration.
5.1b	Lighting Controls Retrofit	15	0.5	
6.1	Window and Door Weatherization	20	0.6	
8.1	Install Variable Frequency Drives	15	0.4	
8.2	Domestic Cold Water Booster Pump Replacement	20	0.6	
12.1	Uninterruptible Power Supply Replacement	15	0.1	
14.0	Fire Alarm Upgrade	15	2.2	
	Weighted Sum (years)		**20.8**	

C. COMMISSIONING PLAN

The following is a list of the activities that we will perform as part of the commissioning effort. Documentation will be maintained and provided to the owner in both a hard and soft copy commissioning manual(s), with separate information provided in all of these categories for each ECM. The commissioning plan will include a master list of deficiencies with a tracking plan that will include successful completion of resolved deficiencies. All commissioning plan activities will be completed prior to the measurement & verification phase for the project.

Note that these commissioning activities will be performed by Honeywell project team members (in-house Honeywell performance contracting team) for all ECMs independently or by our subcontractors:

1. During the completion of the design phase (currently at approximately 30% design)
    a. Review of Design Development
    b. Perform a final review of the drawings and specifications
2. Submittals and test writing
    a. Review Equipment submittals
    b. Write Startup and PF checklists
    c. Controls sequence of operations program review meeting
    d. Write FPT Tests
3. Construction Observation
    a. Site observations
    b. HVAC performance verification checklist completion
    c. Equipment startup
    d. Startup documentation
    e. Controls system checkout
4. HVAC Functional performance testing
5. Substantial Completion site review
6. Post Acceptance Phase - Short-term diagnostic monitoring
7. O&M, training, reporting, warranty
    a. O&M Manuals submitted
    b. Review O&M manuals
    c. Review as-built documentation
    d. Seasonal testing
    e. Final commissioning report

All new equipment installed and existing systems modified by Honeywell will have, at a minimum, the following commissioning tasks performed:

1. For mechanical/HVAC equipment, systems and controls (ECM 1.1, 3.1, 4.1, 4.2, 4.3, 4.4, 4.5, 8.1, 8.2, 12.1, & 14.0)
    a. Inspection and documentation that all work was completed in compliance with contract scope.
    b. Inspection, calibration and documentation of ability to meet system design parameters.
    c. Functional sequence of operations simulation, fine-tuning and documentation to ensure
    d. Test, balance & report of air and water systems
2. Lighting retrofits & controls (ECM 5.1 & 5.2)
    a. inspection and documentation that all work was completed in compliance with contract scope.
    b. Spot testing of light levels to ensure that post retrofit light levels meet the associated IESNA standard.

3. Building Envelope (ECM 6.1)

a. Inspection and documentation that all work was completed in compliance with contract scope.

D. MEASUREMENT & VERIFICATION ("M&V") PLAN

M&V activities for this project generally follow Option A and Option B Methodologies of the International Performance Measurement and Verification Protocol ("IPMVP"), 1997 version.

A summary of the M&V methodologies and the data we will be using for baseline establishment and savings calculations is provided below. Additional details are provided on the following pages as well:

Measurement and Verification Methodology(s) Applicable to Agreement:

Energy Conservation Measure	Electric Savings Verification Method	Fuel Savings Verification Method	Other Utility Savings Verification Method
1.1 Boiler Plant Upgrades	Option B	Option B	N/A
3.1 Control System Upgrades	Option B	Option B	N/A
4.1 Unit Ventilator Upgrades	Option A	Option A	N/A
4.2 Heat Recovery Unit Installation	Option A	Option A	N/A
4.3 Furnace Installation	Option A	Option A	N/A
4.4 DX Condenser Replacement	Option A	Option A	N/A
4.5 Gas-Fired Radiant Heater Installation	Option A	Option A	N/A
5.1 Lighting Fixture & Controls Retrofit	Option A	Option A	N/A
6.1 Window & Door Weatherization	Option A	Option A	N/A
8.1 Variable Frequency Drives on AHU Fan Motors	Option B	Option B	N/A
8.2 Domestic Cold Water Pump Replacement	Option A	Option A	N/A
12.1 Uninterruptible Power Supply Replacement	Option A	Option A	N/A

Energy Cost Avoidance: The following describes the M&V procedures, formulas, and stipulated values which may be used in the calculation of the energy cost avoidance. The calculation of energy cost avoidance is based upon the utility rate paid during the Guarantee Year, or the Baseline Period utility rate, whichever produces the higher cost avoidance and/or as defined heretofore. In case of a shortfall, Honeywell will be allowed to remedy and have the option of extending M&V analysis to verify successful performance. Energy cost avoidance may also include, but is not limited to, Savings from demand charges, power factor correction, taxes, ratchet charges, rate changes and other utility tariff charges that are reduced as a result of the HONEYWELL involvement. The Customer is responsible for procuring a ratchet reset from the local utility company, as applicable. In case any ratchets are not reset the following adjustment will be made - energy cost avoidance will be calculated as if the ratchet has been reset at the end of the installation of electrical demand reducing ECMs.

Specific M&V Plan(s): The following describes the Measurement and Verification procedures, formulas, and stipulated values which may be used in the determination of cost avoidance and/or performance against the Guarantee for each specific ECM in addition to the general Energy Cost Avoidance procedure previously outlined.

Option A Methodology

Boundary of Energy Use and Cost Avoidance Determination:

The energy cost avoidance determination using Option A Methodology is isolated to equipment/systems installed on an individual basis. Option A Methodology verifies performance through use of physical pre- and post-retrofit measurements. Usage factors can be measured or stipulated based upon engineering estimates, operating schedules, operator logs, typical weather data, or other documented information source(s). Post-retrofit measurements are made only once. Thereafter, inspections are conducted to verify that the installed equipment/system(s) continue to exhibit the capability to generate expected cost avoidance (e.g., commonly referred to as 'potential to perform'.) As long as the 'potential to perform' capability is verified, the cost avoidance originally verified through the initial pre- and post-retrofit measurement data apply, and do not change over the remaining contract agreement term.

Option A Methodology has two major intents:

1. To provide reasonable processes and measurements for less complex ECMs (energy conservation measures) whose performance and operational characteristics are well understood and unlikely to change over time, but still require an approach to measure and verify performance.
2. Balance the need for M&V with the cost impact of completing the M&V activity. That is, the cost to conduct the M&V should not exceed the value of the data returned from the effort.

Honeywell will provide verification that the retrofit systems installed are operating to the specifications of the manufacturer and to the specifications projected in this Agreement through the documentation records provided by the installer upon ECM start up or commissioning.

Standard engineering practices and principals, equipment specifications, and measured operational and performance parameters are used to determine utility consumption values by equipment type. Utility consumption by equipment type is projected to annual consumption determined by annual use (annual operating hours, occupancy, heating load, etc). Annual consumption data is used to calculate annual utility costs using applicable utility rate data.

Potential-to-Save Verification Plan

The verification of potential-to-save will be based on review of installation data and documentation to verify that the equipment/systems installed meet or exceed contract specifications for quantity, capacity, efficiency, and operational parameters and are in compliance with the project scope and engineering calculations.

M&V sample data collected and used for cost avoidance determination may include, but is not limited to, W/kW per fixture and/or wall switch/breaker circuit for lighting, foot candle lighting intensity levels in lighted work zones, boiler efficiency percentages, AHU system operating parameters/performance values, etc. Annual building walk-through inspections will be conducted to verify on-going potential to save based on actual conditions observed.

Parameters to be Monitored & Sampling Plan

The installed equipment must meet or exceed the specifications and scope of work for Quantity – Number of units replaced or installed. Installation documents provided by Contractor should comply with specifications and scope of work as intended. A building walk-through verification by a Honeywell M&V

Professional includes observation and appropriate photo documentation that indicates installation compliance with specifications and scope of work.

The installed equipment must meet or exceed specifications and scope of work for Capacity – System input/output performance. Installation documents provided by the Contractor should comply with specifications and scope of work as intended. A building walk-through verification by a Honeywell M&V Professional includes observation and appropriate photo documentation that indicates installation compliance with specifications and scope of work.

The installed equipment must meet or exceed specifications and scope of work for Operation – Systems installed must be accepted by customer and Honeywell as operating within manufacturer and engineering specifications provided by the Honeywell PCE in the Energy Calculations. Installation documents provided by Contractor should comply with specifications and scope of work as intended. A building walk-through verification by a Honeywell M&V Professional includes observation and appropriate data analysis that indicates installation compliance with specifications and scope of work. Honeywell shall notify Customer in advance of any verification building walk-through(s), and Customer shall have the right, at its option, to accompany M&V Professional and review any and all documentation provided by manufacturer and installer or developed by Honeywell relating to Quantity, Capacity, and Operation.

Option A M&V methodology sampling rate table:

ECM	Baseline Parameters	Potential to Save Verification Parameters	Guarantee Term Parameters To Be Monitored	Guarantee Term Sampling Plan
Lighting Retrofit	Measured Pre-Retrofit Fixture kW via direct measurement of Volts & Amps of Switch/Electrical Panel Circuits (Sample population 10% quantity [using 80/20 confidence/precision criteria] per fixture type, per bldg. IES standard fixture kW for non-sampled fixture types. Baseline utility cost rates. Stipulated annual use hours.	Measured Post-Retrofit Fixture kW via direct measurement of Volts & Amps at same Switch/Electrical Panel Circuits completed Pre-Retrofit (Sample population 10% quantity [using 80/20 Confidence/Precision criteria] per Fixture Type, per Bldg. IES Standard fixture kW for non-sampled fixture types. Higher of baseline or prevailing utility cost rates. Stipulated annual use hours.	Visual Inspection by Honeywell MVS to confirm ECM continued presence and operation during annual Site Visit Building Walk-Through Surveys.	No electrical parameter re-measurement. Verify continued presence of Post-Retrofit Fixtures by visual inspection during Honeywell MVS annual Site Visit Building Walk-Through Surveys & assessment of repair/replacement equipment inventories.
Unit Ventilator Upgrades	Pre-retrofit unit descriptions, quantities, nameplate & Mfg rating data, photodocs of existing units & conditions, engineering calculations, & utility bill baseline data	Post-retrofit unit descriptions, quantities, nameplate & Mfg rating data, photodocs of new installed units, engineering calculations	Visual Inspection by Honeywell MVS to confirm ECM continued presence and operation during annual Site Visit Building Walk-Through Surveys.	Annual Site Visit Building Walk-Through Survey to Confirm ECM Operation.
Heat Recovery Unit Installation	Pre-retrofit unit descriptions, quantities, nameplate & manufacturer/Mfg rating data, photodocs of existing units & conditions, engineering calculations, & utility bill baseline data	Post-retrofit unit descriptions, quantities, nameplate & Mfg rating data, photodocs of new installed units, engineering calculations	Visual inspection by Honeywell MVS to confirm ECM continued presence and operation during annual site visit building walk-through surveys.	Annual site visit building walk-through survey to confirm ECM operation.
Furnace Installation	Pre-retrofit unit descriptions, quantities, nameplate & manufacturer/Mfg rating data, photodocs of existing units & conditions, engineering calculations, & utility bill baseline data	Post-retrofit unit descriptions, quantities, nameplate & Mfg rating data, photodocs of new installed units, engineering calculations	Visual inspection by Honeywell MVS to confirm ECM continued presence and operation during annual site visit building walk-through surveys.	Annual site visit building walk-through survey to confirm ECM operation.
DX Condenser Replacement	Pre-retrofit unit descriptions, quantities, nameplate & manufacturer/Mfg rating data, photodocs of existing units & conditions, engineering calculations, & utility bill baseline data	Post-retrofit unit descriptions, quantities, nameplate & Mfg rating data, photodocs of new installed units, engineering calculations	Visual inspection by Honeywell MVS to confirm ECM continued presence and operation during annual site visit building walk-through surveys.	Annual site visit building walk-through survey to confirm ECM operation.

ECM	Baseline Parameters	Potential to Save Verification Parameters	Guarantee Term Parameters To Be Monitored	Guarantee Term Sampling Plan
Gas-Fired Radiant Heater Installation	Pre-retrofit unit descriptions, quantities, nameplate & manufacturer/Mfg rating data, photodocs of existing units & conditions, engineering calculations, & utility bill baseline data	Post-retrofit unit descriptions, quantities, nameplate & Mfg rating data, photodocs of new installed units, engineering calculations	Visual inspection by Honeywell MVS to confirm ECM continued presence and operation during annual site visit building walk-through surveys.	Annual site visit building walk-through survey to confirm ECM operation.
Window & Door Weatherization	Pre-retrofit unit descriptions, quantities, nameplate & manufacturer/Mfg rating data, photodocs of existing units & conditions, engineering calculations, & utility bill baseline data	Post-retrofit unit descriptions, quantities, nameplate & Mfg rating data, photodocs of new installed units, engineering calculations	Visual inspection by Honeywell MVS to confirm ECM continued presence and operation during annual site visit building walk-through surveys.	Annual site visit building walk-through survey to confirm ECM operation.
Domestic Chilled Water Pump Replacement	Pre-retrofit unit descriptions, quantities, nameplate & manufacturer/Mfg rating data, photodocs of existing units & conditions, engineering calculations, & utility bill baseline data	Post-retrofit unit descriptions, quantities, nameplate & Mfg rating data, photodocs of new installed units, engineering calculations	Visual inspection by Honeywell MVS to confirm ECM continued presence and operation during annual site visit building walk-through surveys.	Annual site visit building walk-through survey to confirm ECM operation.
Uninterruptible Power Supply Replacement	Pre-retrofit unit descriptions, quantities, nameplate & manufacturer/Mfg rating data, photodocs of existing units & conditions, engineering calculations, & utility bill baseline data	Post-retrofit unit descriptions, quantities, nameplate & Mfg rating data, photodocs of new installed units, engineering calculations	Visual inspection by Honeywell MVS to confirm ECM continued presence and operation during annual site visit building walk-through surveys.	Annual site visit building walk-through survey to confirm ECM operation.
Lighting Retrofit	Measured Pre-Retrofit Fixture kW via direct measurement of Volts & Amps of Switch/Electrical Panel Circuits (Sample population 10% quantity [using 80/20 confidence/precision criteria] per fixture type, per bldg. IES standard fixture kW for non-sampled fixture types. Baseline utility cost rates. Stipulated annual use hours.	Measured Post-Retrofit Fixture kW via direct measurement of Volts & Amps at same Switch/Electrical Panel Circuits completed Pre-Retrofit (Sample population 10% quantity [using 80/20 Confidence/Precision criteria] per Fixture Type, per Bldg. IES Standard fixture kW for non-sampled fixture types. Higher of baseline or prevailing utility cost rates. Stipulated annual use hours.	Visual Inspection by Honeywell MVS to confirm ECM continued presence and operation during annual Site Visit Building Walk-Through Surveys.	No electrical parameter re-measurement. Verify continued presence of Post-Retrofit Fixtures by visual inspection during Honeywell MVS annual Site Visit Building Walk-Through Surveys & assessment of repair/replacement equipment inventories.

ECM	Baseline Parameters	Potential to Save Verification Parameters	Guarantee Term Parameters To Be Monitored	Guarantee Term Sampling Plan
Unit Ventilator Upgrades	Pre-retrofit unit descriptions, quantities, nameplate & Mfg rating data, photodocs of existing units & conditions, engineering calculations, & utility bill baseline data	Post-retrofit unit descriptions, quantities, nameplate & Mfg rating data, photodocs of new installed units, engineering calculations	Visual Inspection by Honeywell MVS to confirm ECM continued presence and operation during annual Site Visit Building Walk-Through Surveys.	Annual Site Visit Building Walk-Through Survey to Confirm ECM Operation.
Heat Recovery Unit Installation	Pre-retrofit unit descriptions, quantities, nameplate & manufacturer/Mfg rating data, photodocs of existing units & conditions, engineering calculations, & utility bill baseline data	Post-retrofit unit descriptions, quantities, nameplate & Mfg rating data, photodocs of new installed units, engineering calculations	Visual inspection by Honeywell MVS to confirm ECM continued presence and operation during annual site visit building walk-through surveys.	Annual site visit building walk-through survey to confirm ECM operation.
Furnace Installation	Pre-retrofit unit descriptions, quantities, nameplate & manufacturer/Mfg rating data, photodocs of existing units & conditions, engineering calculations, & utility bill baseline data	Post-retrofit unit descriptions, quantities, nameplate & Mfg rating data, photodocs of new installed units, engineering calculations	Visual inspection by Honeywell MVS to confirm ECM continued presence and operation during annual site visit building walk-through surveys.	Annual site visit building walk-through survey to confirm ECM operation.
DX Condenser Replacement	Pre-retrofit unit descriptions, quantities, nameplate & manufacturer/Mfg rating data, photodocs of existing units & conditions, engineering calculations, & utility bill baseline data	Post-retrofit unit descriptions, quantities, nameplate & Mfg rating data, photodocs of new installed units, engineering calculations	Visual inspection by Honeywell MVS to confirm ECM continued presence and operation during annual site visit building walk-through surveys.	Annual site visit building walk-through survey to confirm ECM operation.
Gas-Fired Radiant Heater Installation	Pre-retrofit unit descriptions, quantities, nameplate & manufacturer/Mfg rating data, photodocs of existing units & conditions, engineering calculations, & utility bill baseline data	Post-retrofit unit descriptions, quantities, nameplate & Mfg rating data, photodocs of new installed units, engineering calculations	Visual inspection by Honeywell MVS to confirm ECM continued presence and operation during annual site visit building walk-through surveys.	Annual site visit building walk-through survey to confirm ECM operation.
Window & Door Weatherization	Pre-retrofit unit descriptions, quantities, nameplate & manufacturer/Mfg rating data, photodocs of existing units & conditions, engineering calculations, & utility bill baseline data	Post-retrofit unit descriptions, quantities, nameplate & Mfg rating data, photodocs of new installed units, engineering calculations	Visual inspection by Honeywell MVS to confirm ECM continued presence and operation during annual site visit building walk-through surveys.	Annual site visit building walk-through survey to confirm ECM operation.

ECM	Baseline Parameters	Potential to Save Verification Parameters	Guarantee Term Parameters To Be Monitored	Guarantee Term Sampling Plan
Domestic Chilled Water Pump Replacement	Pre-retrofit unit descriptions, quantities, nameplate & manufacturer/Mfg rating data, photodocs of existing units & conditions, engineering calculations, & utility bill baseline data	Post-retrofit unit descriptions, quantities, nameplate & Mfg rating data, photodocs of new installed units, engineering calculations	Visual inspection by Honeywell MVS to confirm ECM continued presence and operation during annual site visit building walk-through surveys.	Annual site visit building walk-through survey to confirm ECM operation.
Uninterruptible Power Supply Replacement	Pre-retrofit unit descriptions, quantities, nameplate & manufacturer/Mfg rating data, photodocs of existing units & conditions, engineering calculations, & utility bill baseline data	Post-retrofit unit descriptions, quantities, nameplate & Mfg rating data, photodocs of new installed units, engineering calculations	Visual inspection by Honeywell MVS to confirm ECM continued presence and operation during annual site visit building walk-through surveys.	Annual site visit building walk-through survey to confirm ECM operation.

Option B Methodology

Boundary of Energy Use and Cost Avoidance Determination:
Option B Methodology is a retrofit isolation or system level approach with procedure(s) similar to Option A, but due to higher levels of complexity require more end-use metering and measurement. Option B Methodology uses on-going periodic or continuous measurement/metering to capture data used to determine the energy use/cost avoidance during the post-retrofit period. This M&V method is intended for ECMs with performance and operational factors that can be measured at the component or system level, and where long-term performance needs to be verified. Short-term periodic measurements can be used when variations in the measured parameters are small. Continuous monitoring may be used to improve or optimize the operation of the equipment/system over time.

Option B Methodology has two major intents:

1. To verify performance over the life of the agreement using periodic or continuous measurement of appropriate energy quantities or operational parameters on a long-term basis. Usage factors may be stipulated as in Option A, or measured continuously as appropriate to each ECM within the project scope of work.
2. Balance the need for M&V with the cost impact of completing the M&V activity. That is, the cost to conduct the M&V should not exceed the value of the data returned from the effort.

Honeywell will provide verification that the retrofit systems installed are operating to the specifications of the manufacturer and to the specifications projected in this Agreement through:

1. The documentation records provided by the installer upon start up or commissioning.
2. Use of periodic or continuous measurement/metering of appropriate energy quantities or operational parameters of individual ECMs where Option B Methodology is used.
3. Use of annual performance test results compared to those gathered and reported upon start up or commissioning.

Standard engineering practices and principals, equipment specifications, and measured operational and performance parameters are used to determine utility consumption values by equipment type. Utility consumption by equipment type is projected to annual consumption determined by annual use (annual operating hours, occupancy, heating load, etc). Annual consumption data is used to calculate annual utility costs using applicable utility rate data.

Cost Avoidance Verification Plan
The verification of applicable cost avoidance will be based on review of installation data and documentation to verify that the equipment/systems installed meet or exceed contract specifications for quantity, capacity, efficiency, and operational parameters and are in compliance with the project scope and engineering calculations.

M&V sample data collected and used for cost avoidance determination may include, but is not limited to, annual boiler efficiency test results, operating schedule, parameter, log and Trend data captured by a building automation system, and/or results of physical tests conducted by MVS during annual building walk-through inspections to verify on-going performance results, and observe and assess actual operating conditions.

Parameters to be Monitored & Sampling Plan

The installed equipment must meet or exceed the specifications and scope of work for Quantity – Number of units replaced or installed. Installation documents provided by Contractor should comply with specifications and scope of work as intended. A building walk-through verification by a Honeywell M&V Professional includes observation and appropriate photo documentation that indicates installation compliance with specifications and scope of work.

The installed equipment must meet or exceed specifications and scope of work for Capacity – System input/output performance. Installation documents provided by the Contractor should comply with specifications and scope of work as intended. A building walk-through verification by a Honeywell M&V Professional includes observation and appropriate photo documentation that indicates installation compliance with specifications and scope of work.

The installed equipment must meet or exceed specifications and scope of work for Operation – Systems installed must be accepted by customer and Honeywell as operating within manufacturer and engineering specifications provided by the Honeywell PCE in the Energy Calculations. Installation documents provided by Contractor should comply with specifications and scope of work as intended. A building walk-through verification by a Honeywell M&V Professional includes observation and appropriate data capture and analysis that indicates installation compliance with specifications and scope of work. Honeywell shall notify Customer in advance of any verification building walk-through(s), and Customer shall have the right, at its option, to accompany M&V Professional and review any and all documentation provided by manufacturer and installer or developed by Honeywell relating to Quantity, Capacity, and Operation.

Option B M&V methodology sampling rate table:

ECM	Baseline Parameters	Potential to Save Verification Parameters	Guarantee Term Parameters To Be Monitored	Guarantee Term Sampling Plan
Boiler Plant Upgrades	Pre-retrofit unit descriptions, quantities, nameplate & manufacturer/Mfg rating data, photodocs of existing units & conditions, engineering calculations, & utility bill baseline data; Operating hours; Setpoints; Pre-install combustion efficiency analysis	Manufacturer equipment data; Agreed To operating hours; control setpoints; Post-install combustion efficiency test/analysis	Annual combustion efficiency tests/analysis	Annual combustion efficiency tests on two (2) 924 kBTU boilers; Comparison of new test results against initial post-install subcontractor/installer commissioning combustion efficiency test results
Control System Upgrades	Document operating hours with short term data logging; demonstrate pre-retrofit outside air/OA intake conditions & temperature reset operation; Verify control points, program schedules; Stipulate manufacturer data.	Verify energy management system/EMS trending of run-hours; OA intake %; temperature reset; etc.	Annual checks of EMS operating parameters	Measurement & verification specialist (MVS) verifies schedules, control setpoints, etc. Comparison of findings against agreed to operating parameters
Variable Frequency Drives on AHU Fan Motors	Verify devices have capability to display volts/amps during "run up" tests. Assure installing subcontractor completes complete commissioning & documents "run up" tests for comparison to future M&V data collection.	Subcontractor/installer commissioning reports for future comparison to M&V data collection.	Annual "run up" tests by Honeywell MVS mirroring those completed during installation commissioning	Annual "run up" tests on 6 variable frequency drives/VFDs. Compare results to installing subcontractor commissioning post-install tests. Performance verified on comparable results. Determine ability of EMS to trend for more detailed validation.

ECM Breakout By Facility: The following table shows the ECM breakout per facility with specific ECM's noted that will contribute to project guaranteed cost avoidance and savings in addition to the ECM's that have no guaranteed savings associated with them and are a part of the project for infrastructure improvements only.

ECM Breakout Table by Facility

ECM Breakout Table by Facility
East Grand School District - Granby, CO

ECM#	ECMs Implemented / Facilities	Middle Park High School	East Grand Middle School	Fraser Valley Elementary School	Granby Elementary	Grand Lake Elementary School	Indian Peaks Charter School	District Offices/ Warehouse	Transportation
1.1	Boiler Plant Upgrades			Imprv		$			
3.1	Control System Upgrades		$	$	$	$		$	$
4.1	Unit Ventilator Upgrades			Imprv		Imprv			
4.2	Heat Recovery Unit Installation				Imprv			Imprv	
4.3	Furnace Installation							Imprv	
4.4	Condensing Unit Replacement							Imprv	
4.5	Gas-Fired Radiant Heater Installation							Imprv	
5.1	Lighting Fixture & Controls Retrofit	$	$	$	$	$	$	$	$
6.1	Window & Door Weatherization	$		$	$	$	$	$	
8.1	Variable Frequency Drives on AHU Fan Motors	$	$	$					
8.2	Domestic Cold Water Pump Replacement		Imprv						
12.1	Uninterruptible Power Supply Replacement			Imprv		Imprv			

$	• Indicates ECMs at Noted School Facilities that contribute to project Guaranteed Cost Avoidance/Savings.
Imprv	• Indicates ECMs at Noted School Facilities that were implemented for infrastructure improvement. No Cost Avoidance/Savings are claimed or guaranteed for these. However, M&V Plan calls for validing the associated equipment meets specifications, work is completed properly and the equipment/systems are operating properly.

E. COMPATIBILITY WITH EXISTING SYSTEMS

All specifications used in securing competitive bids/proposals were clear in that full and open protocol would be required for all control system installations. This scope included a statement requiring full compatibility with existing systems in each building that are not affected by the measure.

Appendix Material

a) Description of data collection methodology
b) Supporting calculations and assumptions used for developing savings estimates
c) Specifications and manufacturer cut sheets for major mechanical components
d) Detailed (line-by-line) lighting counts
e) Subcontractor cost proposals
f) Standards of comfort
g) Energy end use analysis results

As agreed to and directed by East Grand School district, we have prepared and attached/enclosed a compact disk ("CD") with soft copies of the savings estimates. These include a combination of spreadsheet analysis tools, and Trane Trace 700 whole building models. Electronic copies of all of these models are included on the CD accompanying this report in lieu of providing hard copies in this TEA report.

a) Description of data collection methodology

During the preliminary assessment of East Grand School District buildings, a survey form similar to the one included in this section of the appendix was filled out for each building.

At the beginning of the detailed assessment of East Grand School District, a total of 32 “Hobo” dataloggers were deployed for a four to five week period to determine lighting runtimes and motor runtimes as needed in order to refine energy conservation measure scopes and to provide data for energy models. Datalogger results are included in this section of the appendix.

Also at the beginning of the detailed assessment, available building architectural, mechanical, electrical, and structural plans were gathered, reproduced, and studied in detail. These plans were of critical importance in determining building layout, building orientation, construction materials, and other details used to develop building models.

Finally, during the detailed assessment of East Grand School District buildings, building systems were examined in greater depth than was done during the preliminary assessment. Photographs, spot measurements of temperature, electrical, and illuminance data, and detailed notes were taken to allow for further refinement of scope and energy models.

Facility Information ❒Building ___ of ____

Facility Name _____

Contact Name _____ Telephone # _____

Surveyed by _____ Date _____

Building Information Occupied by ❒Owner ❒Tenant

Name _____

Address _____

City _____ State _____ Zip _____

Distance from Branch _____ miles Gross square footage _____

Building Type: _____

Building Envelope

General ❒ Age _____ ❒Stories _____ ❒Ceiling Height, ft _____

Exterior ❒ Brick ❒Frame ❒ Block ❒Metal ❒ _____ ❒% of exterior glass _____

Windows ❒Triple ❒ Double ❒ Single ❒Low E ❒Storm ❒ _____

Insulation ❒Walls _____ ❒Ceiling _____ ❒Roof _____

General Building Sketch (or attach floor plans) Indicate North

Plans

Plans Available ❒Mechanical ❒ Electrical ❒Architectural ❒Control ❒Floor Plans

❒EMCS ❒Fire Alarm (Escape) ❒Other _____

Utilities

Utility	Meter #	Utility	Meter #
❒Electrical		❒Steam	
❒Nat Gas		❒Chilled Water	
❒Oil		❒LPG	
❒Coal		❒Water	

Building Schedules

HVAC & Lighting Schedule	❒HVAC	❒Lights
Weekday		
Weekend		
Holiday		
Cleaning		
Other		

Hours of Occupancy
Weekday
Weekend
Holiday
Cleaning
Other

Notes:

Cooling System	Cooled Sq.Ft _____			Estimated Tot CapQty	
❒Absorption Chillers			❒Cooling Tower	_____Tons	_____
❒ Screw Chillers	❒Air Cooled	❒Cooling Tower		_____Tons	_____
❒Reciprocating Chillers		❒Air Cooled	❒Cooling Tower	_____Tons	_____
❒ Multi-stack Chiller		❒Air Cooled	❒Cooling Tower	_____Tons	_____
❒Direct Expansion	❒Air Cooled	❒Cooling Tower		_____Tons	_____
❒Evaporative Cooling			❒Cooling Tower	_____Tons	_____
❒Plate & Frame HX			❒Cooling Tower	_____Tons	_____
❒Other Cooling System		❒Air Cooled	❒Cooling Tower	_____Tons	_____

Equipment details:

Heating System	Heated Sq.Ft _____				Estimated Tot CapQty	
❒Hot Water Heat Exchanger					_____ kBTU/h_	
❒HW Boiler	❒Natural Gas	❒LPG	❒Coal	❒Oil ❒Electric	_____ kBTU/h_	
❒Steam Boiler	❒Natural Gas	❒LPG	❒Coal	❒Oil PSIG ____	_____ kBTU/h_	
❒Purchased Steam				PSIG_____	_____ kBTU/h_	
❒Direct Fired	❒ Natural Gas	❒LPG	❒Coal	❒Oil	_____ kBTU/h_	
❒Electric Resistance					_____KW	_____
❒Other _____					_____ kBTU/h_	

Equipment details:

Air Handling Systems

				Estimated total flow	Qty
❒Variable Air Volume	❒ Stm ❒ HW ❒GF ❒Elec	❒CHW ❒ DX	❒Econ	_____kCFM	_____
❒Constant Volume	❒ Stm ❒ HW ❒GF ❒Elec	❒CHW ❒ DX	❒Econ	_____kCFM	_____
❒100% OA	❒ Stm ❒ HW ❒GF ❒Elec	❒CHW ❒ DX		_____kCFM	_____
❒Multi-zone	❒ Stm ❒ HW ❒GF ❒Elec	❒CHW ❒ DX	❒Econ	_____kCFM	_____
❒Dual Duct	❒ Stm ❒ HW ❒GF ❒Elec	❒CHW ❒ DX	❒Econ	_____kCFM	_____
❒Package Units	❒ Stm ❒ HW ❒GF ❒Elec	❒CHW ❒ DX	❒Econ	_____kCFM	_____
❒Computer Units	❒ Stm ❒ HW ❒GF ❒Elec	❒CHW ❒ DX	❒Econ	_____kCFM	_____
❒Fan Coil Units	❒ Stm ❒ HW ❒GF ❒Elec	❒CHW ❒ DX	❒Econ	_____kCFM	_____
❒Heat Pumps	❒ Stm ❒ HW ❒GF ❒Elec	❒CHW ❒ DX	❒Econ	_____kCFM	_____
❒Unit Ventilators	❒ Stm ❒ HW ❒GF ❒Elec	❒CHW ❒ DX	❒Econ	_____kCFM	_____
❒Split Systems	❒ Stm ❒ HW ❒GF ❒Elec	❒CHW ❒ DX	❒Econ	_____kCFM	_____
❒Radiation	❒ Stm ❒ HW ❒GF ❒Elec	❒CHW ❒ DX	❒Econ	_____kCFM	_____

Equipment Details

Lighting Systems

Space 1: _____ Space 2: _____
Area, sf: _____ Area, sf: _____
Fixture type: _____ Fixture type: _____
Quantity: _____ Quantity: _____
LPD, W/sf: _____ LPD, W/sf: _____
% of bldg area _____ % of bldg area _____

Space 3: _____ Space 4: _____
Area, sf: _____ Area, sf: _____
Fixture type: _____ Fixture type: _____
Quantity: _____ Quantity: _____
LPD, W/sf: _____ LPD, W/sf: _____
% of bldg area _____ % of bldg area _____

Notes:

Plumbing and Irrigation Systems

		Flow Rates	Qty
Water Closets	❒ Older fixtures	_____GPF	_____
	❒ New fixtures	_____ GPF	_____
Urinals	❒ Older fixtures	_____GPF	_____
	❒ New fixtures	_____ GPF	_____
Lav Faucets	❒ High Flow	_____ GPM	_____
	❒ Low Flow	_____ GPM	_____
Showers	❒ High Flow	_____ GPM	_____
	❒ Low Flow	_____ GPM	_____

Building Occupants ❒ Tenants _____ ❒ Visitors _____
Total irrigated area _____ Cooling tower submeter ❒ Yes ❒ No
Notes:

Datalogger Results:
East Grand School District

Item	Data Logger Type	Building	Area	Hours "On" 4-5 week period	% of Time "On"	Estimated Annual Hours "On"	Notes
1	Motor on/off	Grand Lake Elementary	Classroom 3 UV Motor			2,455	Fell Off Motor - No Results
2	Motor on/off	Granby Elementary	Kindergarten UV Motor			2,455	Fell Off Motor - No Results
3	Motor on/off	Granby Elementary	2005 RTU Supply Fan Motor	190	21.6%	2,455	
4	Motor on/off	Granby Elementary	Rooftop AHU-1 Supply Fan Motor	35	21.9%	2,455	Datalogger Fell off motor on 4/13.
5	Motor on/off	Granby Elementary	Rooftop AHU-1 Return Fan Motor	202	27.0%	2,455	
6	Motor on/off	Fraser Valley Elementary	Kindergarten UV Motor	277	31.5%	2,455	
7	Motor on/off	East Grand Middle School	DCW Booster Pump Motor #1	92	16.7%	1,463	Datalogger fell off motor 4/30
8	Motor on/off	East Grand Middle School	DCW Booster Pump Motor #2	25	11.6%	1,016	Datalogger fell off motor 4/15
9	Motor on/off	East Grand Middle School	Boiler Room Vent Fan Motor	715	96.9%	8,488	
1	Lighton/off	Grand Lake Elementary	Gym	190	28.8%	2,523	
2	Lighton/off	Grand Lake Elementary	Classroom 3	176	19.8%	2,455	
3	Lighton/off	Middle Park High School	Old Gym	272	30.9%	2,733	
4	Lighton/off	Middle Park High School	New Gym	297	33.8%	2,733	
5	Lighton/off	Middle Park High School	Weight Room	187	21.3%	2,080	
6	Lighton/off	Middle Park High School	Classroom 211	203	22.7%	1,987	
7	Lighton/off	Middle Park High School	Media Center	186	21.1%	1,987	
8	Lighton/off	East Grand Middle School	Hallway to Gym	423	47.5%	4,163	
9	Lighton/off	East Grand Middle School	Classroom 215	183	27.0%	2,365	
10	Lighton/off	District Office	Break Room	199	22.6%	2,000	
11	Lighton/off	District Office	Warehouse			2,280	Battery died at 2:00 PM 3/31
12	Lighton/off	Granby Elementary	Mrs Coustineau's Classroom	221	29.1%	2,455	
13	Lighton/off	Granby Elementary	Rm 102	210	27.7%	2,455	
14	Lighton/off	Granby Elementary	Conference Room			2,271	Battery died at 2:45 PM 4/6
15	Lighton/off	Granby Elementary	Break Room	311	41.6%	2,271	
16	Lighton/off	Transportation Facility	Bus Barn Fluorescant			2,200	Battery died at 11:25 AM 4/6
17	Lighton/off	Transportation Facility	Maintenance Shop HID	236	31.0%	2,200	
18	Lighton/off	Transportation Facility	Break Room	212	27.9%	2,200	
19	Lighton/off	Fraser Valley Elementary	Classroom 105	166	21.9%	2,455	
20	Lighton/off	Fraser Valley Elementary	Classroom 120	177	23.3%	2,455	
21	Lighton/off	East Grand Middle School	Art Room	192	25.3%	2,365	
22	Lighton/off	District Office	Light Above Conference Table	176	23.0%	2,000	
23	Lighton/off	Fraser Valley Elementary	Kindergarten	186	24.5%	2,455	

b) Supporting calculations and assumptions used for developing savings estimates

As stated in the "Savings Calculations" section, savings estimates were developed using a combination of spreadsheet analysis tools and Trane Trace 700 whole building models. Electronic copies of all of these models are included on the CD accompanying this report.

c) Specifications and manufacturer cut sheets for major mechanical components

Cutsheets for the following major mechanical components are provided on the following pages:

1. Grand Lake Elementary School Boiler Upgrades (ECM 1.1)
    a. Buderus Boilers
    b. HWP-1 & 2 – Bell & Gossett
    c. HWP-3 & 4 – Bell & Gossett
    d. Air Separator – Bell & Gossett
    e. Expansion Tank – Bell & Gossett
2. Fraser Valley Elementary School Boiler Upgrades (ECM 1.1)
    a. Plate Heat Exchanger – Bell & Gossett
    b. HWP-1 & 2 – Bell & Gossett
    c. Air Separator – Bell & Gossett
    d. Expansion Tank – Bell & Gossett
3. Granby Elementary School Heat Recovery Unit (ECM 4.2)
    a. Heat Recovery Unit – Munters Des Champs Laboratories Mini-Z-Pack
4. District Office Heat Recovery Unit (ECM 4.2)
    a. Heat Recovery Unit – Munters Des Champs Laboratories Mini-Z-Pack
5. District Office Furnace Installation (ECM 4.3)
    a. Furnace – Lennox
6. District Office Condensing Unit Replacement (ECM 4.4)
    a. Condensing Unit – Lennox
7. District Office Gas Fired Radiant Heater Installation (ECM 4.5)
    a. Gas Fired Radiant Tube Heaters – Solaronics
8. East Grand Middle School Replace Domestic Cold Water Booster Pump (ECM 8.2)
    a. Domestic Cold Water Booster Pump Package - Grundfos

G315 | G515 | G615
Cast Iron Commercial Boilers

Buderus

Superior Equipment by Design

- High Efficiency - Combustion Efficiencies Up To 88%
- Thermostream Design Eliminates Thermal Shock
- Flexible, Corrosion Resistant GL-180M Cast Iron
- Full Swing Reversible Burner Door for Excellent Serviceability
- 350 to 3,982 MBH Output

Comfortable. Efficient. Intelligent Heating.

A Better Way to Heat

The Buderus commercial Thermostream boilers are designed with many physical attributes setting them above the competition and increasing their longevity and efficiency. The burner doors are field adjustable to swing fully open from either side, to enable the boilers to fit in any location. These boilers are shipped knocked down for easy transport, the G315 and the G515 can also be shipped as an assembled block. Due to the unique chamber design, no refractory materials are used. This reduces the number of service calls and maximizes heat transfer. Buderus precision castings eliminate the need for manual grinding. Precision beveled steel push nipples join cast iron sections and high temperature flue sealants are used to sustain pressurized operation.

The G315 and G515 come with a full 3 ½ of thermal insulation, and the G615 comes with a full 4 of thermal insulation to reduce standby heat loss. All Buderus cast iron commercial boilers are manufactured with the Buderus GL-180M cast iron with a silicon "barrier skin." To streamline the appearance of the boilers, the supply and return connections for the G315 are located at the rear of the boiler, while the G515/G615 have top supply and a rear return. These boilers are for use with hot water and can be installed with gas, oil or dual fuel burners.

Intelligent Heating – by design

Buderus, the world leader in heating technology, manufactures the highest quality boilers based on centuries of experience. With its innovative design and quality manufacturing, a Buderus boiler will outlast and out-perform virtually any other commercial hot water boiler system in the world.

The G315, G515 and G615 are designed to maximize the heating value of every ounce of fuel and are built with the highest quality materials. Established in 1731, Buderus uses state-of-the-art techniques in the design and manufacturing of its boilers.

Thermostream Design

The Buderus developed **Thermostream** principle is proven for higher efficiency and improved system reliability in high volume heating systems. Condensation and thermal shock are made impossible by design, as cool return water mixes internally and is preheated with supply water before exposure to directly heated surfaces. This process eliminates hot and cold spots in the boiler and balances water flow throughout all boiler sections. The **Thermostream** design permits continuous low temperature operation under normal return water without requiring a minimum boiler return temperature. Internal water circulation and injection into each boiler section combined with deflection plates ensure condensate free boiler operation—even under no flow conditions.

Design Benefits

- Eliminates the need for by pass loop or shunt pump.
- Eliminates hot and cold spots in the boiler.
- Minimizes thermal stresses in each section.
- Allows operation at low return water temperatures without thermal shock concerns.
- Minimum supply temperature of 122° F with standard control.
- Ensures balanced water flow through all boiler sections.

Boiler Construction

The boiler sections are assembled with beveled, surface profiled push nipples for long, trouble-free watertight operation. Boiler flue ways are manufactured to be gas tight with tongue and groove section design and elastic, high temperature resistant sealing rope. This seal is fully pressed into the groove during assembly to allow positive pressure operation. A permanent dry door gasket ensures repeated positive sealing of the full swing burner door. Because flue gases cannot escape through the seams between boiler sections, the boilers are able to retain heat more efficiently.

GL-180M Gray Cast Iron:

Buderus GL-180M silicone injected, gray cast iron obtains its superior material characteristics primarily from a high carbon (graphite) and silicone content. Buderus GL-180M gray cast iron has excellent corrosion resistance, exceptional casting characteristics, 40% greater flexibility and elasticity as well as high thermal conductivity. Buderus developed the special substances that are impregnated during the casting process to improve the mechanical properties of cast iron. The graphite precipitates into smaller, modified flakes which produce GL-180M cast iron with 40% greater elasticity and a high silicone barrier for corrosion protection. All sections are heat treated to relieve thermal stresses. Additional elements further enhance the properties of the GL-180M. The graphite appears in two different forms in the microstructure: nodular form producing excellent tensile strength and great elasticity and graphite flakes producing excellent corrosion resistance against acidic combustion products.

Full Three Pass Design – for High Efficiency

Buderus developed the full three pass system to increase the heat transfer and efficiency of boilers. This design allows more heat to be transferred during all three passes, unlike conventional boilers that only use one pass to transfer heat. This system maximizes the total possible heat available with the lowest fuel consumption possible. To greatly decrease standby loss Buderus has manufactured an either 3 ½ or 4 thick thermal insulation.

Parallel Piping

Boilers shall be piped in a reverse return arrangement to ensure equal flow through each boiler. A small thermal bypass shall be installed immediately after the FK supply sensor in order to create flow past the sensor when the system pump (PH) is off.

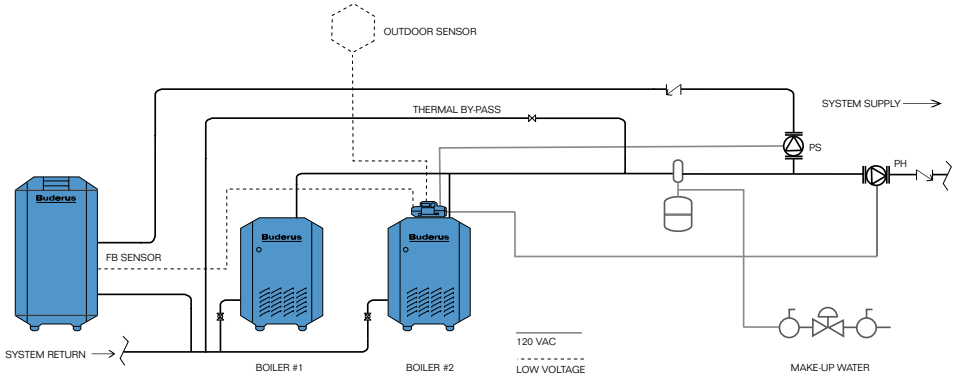

NOTE: This drawing is conceptual in nature and does not purport to address all design, installation or safety considerations.

The Three-Pass Boiler is Designed for:

- Optimized combustion with positive pressure-fired boilers and tailored chamber geometry — no need for a heat-consuming refractory or target wall eliminating the need for costly repairs.
- Minimal stack losses with the modified three-pass flue design's large heat transfer areas.
- Low standby losses with a full 3½" to 4" jacket of thermal insulation around the entire block —even underneath the boiler!

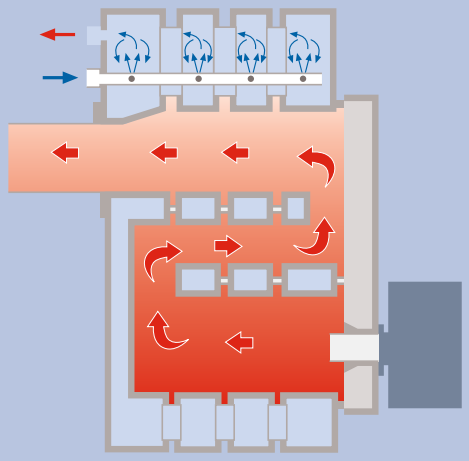

How it works.

The flame fires into the first chamber. Then the flue products flow through the second pass to the front of the boiler. From there they reverse direction again — moving through the third pass to the back, and finally exiting via the flue connection into the chimney. Because the gases are held in the boiler longer this allows the cast iron to absorb the maximum amount of heat, resulting in a lower stack temperature and a higher efficiency.

Complete Your System

Once you have a Buderus boiler, you can add a Buderus indirect fired hot water tank, an optional Buderus Logamatic Control or both. The Logamatic Control maximizes your comfort and fuel savings. It will also accommodate specialized heating applications such as radiant flooring. Combined, this premium heating system will provide years of exceptional comfort and economy.

Convenient Logamatic Control

Logamatic Controls can be used to adjust the firing rates of burners in multi-boiler systems. Controls can be pre-programmed with automatic night and day functions and set to trigger automatic adjustments based on shifts in outdoor or indoor temperatures. An optional module is available for direct communication with building management systems.

The 4000 Series - Multiple Boilers

The intelligent regulation of energy is the heart of any heating system. A Logamatic Control provides the ability to make finer adjustments than are possible by manually turning the boiler off and on or relying on traditional thermostats. Multiple design innovations increase the versatility of Buderus Logamatic Controls including the automatic adjustment between various modes of operation. A change in modes can be set to correspond with time, date or temperature. Modes can also be changed manually. All Logamatic Controls now include summer, winter and vacation modes which effectively regulate energy consumption. This regulation is effectual in single or multi-boiler systems, with any heat source and in accordance with one or multiple heating zones.

The 2107 - Single Boiler

The Buderus Logamatic Controls, designed to work with all Buderus boilers, significantly increase the effectiveness of your heating system. The Controls easily maintain a comfortable environment by measuring indoor and outdoor temperatures in order to automatically and effectively regulate the temperature of the boiler. This allows the boiler to use less fuel while keeping the exact temperature you want. The Logamatic Controls also include the convenience of a setback feature for nighttime as well as a domestic hot water priority option. So, no matter how hard the heating has to work on a cold day, there will always be hot water for showers. All control functions are able to be customized by you. Additionally, the Buderus Logamatic R2107 is designed with a built-in self diagnostic system to aid in maintenance and reduce service costs.

4000 Series Logamatic Control

Integrated multi-boiler system controller with the following features and optional control modules:

- Outdoor reset, staged burner operation.
- Control of single, two-stage and modulating burners. (Up to 3 boilers)
- Automatic and load/switch dependent burner rotation.
- Operation of boiler pumps, 2-way valves, 3 or 4-way valves and system pumps.
- BMS interface capability (list protocols).
- External load capability: DHW and other on-demand loads.
- Self diagnostics and system parameter display.

Model	G315/5	G315/6	G315/7	G315/8	G315/9
Performance Data					
Gross Output MBH	350	454	559	663	768
# of Sections	5	6	7	8	9
Max Input Gas MBH	433	556	678	801	924
Max Input Oil	3.0	3.85	4.7	5.6	6.4
Net IBR MBH	304	395	486	577	668
Boiler HP	10.4	13.6	16.6	19.8	22.9
Max Operating Pressure (psi)	87	87	87	87	87
Combustion Efficiency Oil	86.8%	86.9%	87%	87.1%	87.1%
Combustion Efficiency Gas	84.2%	84.3%	84.4%	84.4%	84.4%
Piping Connections					
Vent Connection Size	7″	7″	7″	7″	7″
Supply	3″	3″	3″	3″	3″
Return	3″	3″	3″	3″	3″
Physical Dimensions					
Overall Boiler Length (L_G)	44¼″	50½″	56¾″	63¼″	69½″
Boiler Block Length (L_K)	38¼″	44½″	50¾″	57″	63½″
Boiler Door Thickness	5″	5″	5″	5″	5″
Minimum Boiler Width (BE)	28″	28″	28″	28″	28″
Height	40¾″	40¾″	40¾″	40¾″	40¾″
Fire Box Depth (LF)	31″	37½″	43¾″	50″	56¼″
Fire Box Diameter	15¾″	15¾″	15¾″	15¾″	15¾″
Fire Box Volume (cu. ft.)	5.19	6.39	7.59	8.79	9.99
Dry Weight (lbs)	1,197	1,391	1,585	1,779	1,973
Water Content (gal)	37.8	45.2	52.6	60	67.4
Operating Weight (lbs)	1,512	1,768	2,024	2,280	2,545

G315 Foundation Dimensions

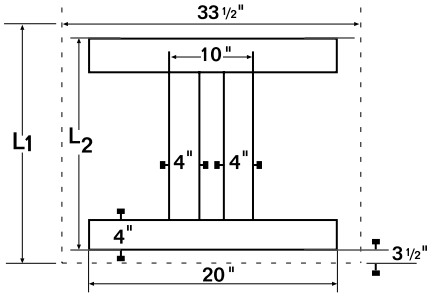

Boiler Model	315/5	315/6	315/7	315/8	315/9
Foundation Length L1	36"	42¼"	48½"	54¼"	61"
Flat Plate Length L2	28¾"	35"	41¼"	47½"	54"

The boiler must be placed on a smooth, level concrete base, 33½" wide. Cement in the base or place on its top either 4"x ¼" flat steel plates or 4" x 2" x ¼" angle irons for boiler support. Dimensions L1 and L2 are specified in the table above.

315 Section Weights in lbs		
Front	Intermediate	Rear
199	199	191

Approval Numbers

MEA 356-98-E

CRN No# 616.TC

c UL us LISTED

Buderus recommends the use of Beckett, Gordon Piatt, Power Flame and Riello burners for oil/gas firing (Buderus stocks Riello and Beckett burners).

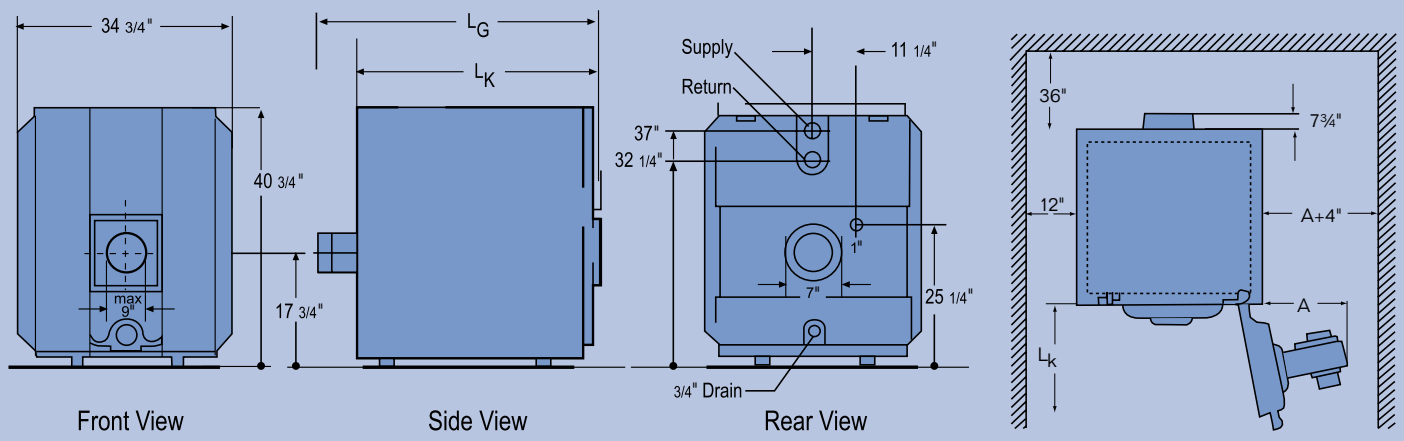

G515

Model	G515/7	G515/8	G515/9	G515/10	G515/11	G515/12
Performance Data						
Gross Output MBH	818	1,009	1,200	1,391	1,582	1,773
# of Sections	7	8	9	10	11	12
Max Input Gas MBH	995	1,216	1,438	1,660	1,881	2,103
Max Input Oil GPH	6.9	8.4	10	11.6	13	14.6
Net IBR MBH	711	877	1,043	1,210	1,376	1,542
Boiler HP	24.5	30.2	35.9	41.6	47.3	53
Max Operating Pressure (psi)	87	87	87	87	87	87
Combustion Efficiency Oil	88.2%	88.2%	88.1%	88.1%	88.1%	88.1%
Combustion Efficiency Gas	85.6%	85.5%	85.5%	85.5%	85.4%	85.4%
Piping Connections						
Vent Connection Size	10″	10″	10″	10″	10″	10″
Supply	4″	4″	4″	4″	4″	4″
Return	4″	4″	4″	4″	4″	4″
Physical Dimensions						
Overall Boiler Length (L_G)	62¼″	69	75¾″	82½″	89¼″	95¾″
Boiler Block Length (L_K)	54½″	61	67½″	74¼″	81″	87½″
Boiler Door Thickness	5″	5″	5″	5″	5″	5″
Minimum Boiler Width (BE)	33″	33″	33″	33″	33″	33″
Height	52¼″	52¼″	52¼″	52¼″	52¼″	52¼″
Fire Box Depth (LF)	45¾″	52½″	59¼″	66″	72½″	79¼″
Fire Box Diameter	20¼″	20¼″	20¼″	20¼″	20¼″	20¼″
Fire Box Volume (cu. ft.)	14.87	17.16	19.46	21.75	24.05	26.31
Dry Weight (lbs)	2,731	3,059	3,505	3,864	4,188	4,541
Water Content (gal)	68.2	77.7	87.2	96.7	106.2	115.7
Operating Weight (lbs)	3,300	3,707	4,233	4,671	5,074	5,506

G515 Foundation Dimensions

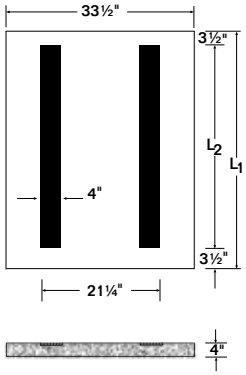

Boiler Model	515/7	515/8	515/9	515/10	515/11	515/12
Foundation Length L1	53½"	60¼"	67"	73½"	80¼"	87"
Flat Plate Length L2	46¾"	53½"	60¼"	67"	73½"	80¼"

515 Section Weights in lbs		
Front	Intermediate	Rear
326	331	357

Approval Numbers
MEA 293-97-E
CRN No# 1530.9C

Buderus recommends the use of Beckett, Gordon Piatt, Power Flame and Riello burners for oil/gas firing (Buderus stocks Riello and Beckett burners).

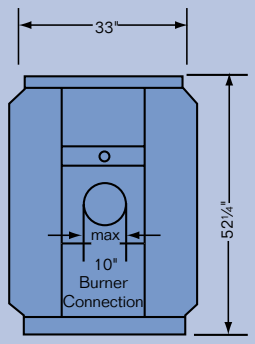

Front View

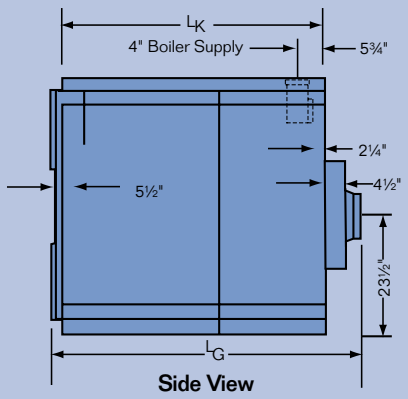

Side View

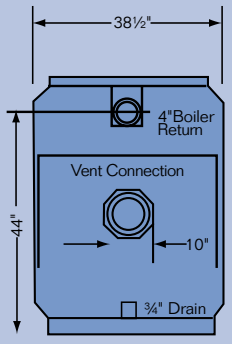

Rear View

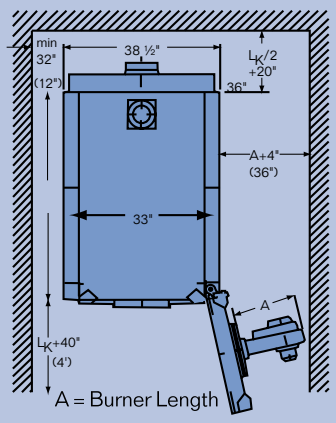

G615

Model	G615/9	G615/10	G615/11	G615/12	G615/13	G615/14	G615/15	G615/16
Performance Data								
Gross Output MBH	1,951	2,242	2,532	2,822	3,112	3,402	3,692	3,982
# of Sections	9	10	11	12	13	14	15	16
Max Input Gas MBH	2,309	2,670	3,031	3392	3,753	4,113	4,474	4,835
Max Input Oil GPH	16	18.5	21	23.5	26	28.5	31	33.5
Net IBR MBH	1,697	1,950	2,202	2,454	2,706	2,958	3,210	3,463
Boiler HP	58.3	66.9	75.6	84.3	92.9	101.6	110.3	118.9
Max Operating Pressure (psi)	87	87	87	87	87	87	87	87
Combustion Efficiency Oil	86.7%	86.7%	86.6%	86.5%	86.5%	86.5%	86.5%	86.5%
Combustion Efficiency Gas	84.1%	84.1%	84%	84%	83.9	83.9%	83.9%	83.9%
Piping Connections								
Vent Connection Size	14″	14″	14″	14″	14″	14″	14″	14″
Supply	6″	6″	6″	6″	6″	6″	6″	6″
Return	6″	6″	6″	6″	6″	6″	6″	6″
Physical Dimensions								
Overall Boiler Length (L_G)	75¾″	82½″	89¼″	96″	102½″	109¼″	116″	122¾″
Boiler Block Length (L_K)	71″	77¾″	84½″	91″	97¾″	104½″	111¼″	117¾″
Boiler Door Thickness	5″	5″	5″	5″	5″	5″	5″	5″
Minimum Boiler Width (BE)	50½″	50½″	50½″	50½″	50½″	50½″	50½″	50½″
Height	62¾″	62¾″	62¾″	62¾″	62¾″	62¾″	62¾″	62¾″
Fire Box Depth (LF)	60″	66¾″	73½″	80″	86¾″	93½″	100¼″	106¾″
Fire Box Diameter	26¾″	26¾″	26¾″	26¾″	26¾″	26¾″	26¾″	26¾″
Fire Box Volume (cu. ft.)	23.56	26.21	29.07	31.46	34.08	36.72	39.34	41.97
Dry Weight (lbs)	5,510	6,045	6,580	7,110	7,645	8,160	8,799	9,125
Water Content (gal)	144	160	176	192	208	224	240	256
Operating Weight (lbs)	6,740	7,390	8,050	8,720	9,390	10,040	10,720	11,280

G615 Foundation Dimensions

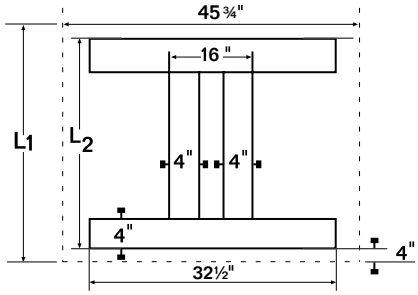

Boiler Model	615/9	615/10	615/11	615/12	615/13	615/14	615/15	615/15
Foundation Length L1	65¾"	72½"	79¼"	86"	92¾"	99¼"	106"	112½"
Flat Plate Length L2	58"	64½"	71¼"	78"	84½"	91¼"	98"	104¾"

615 Section Weights in lbs		
Front	Intermediate	Rear
565	545	657

Approval Numbers

MEA 67-01-E

CRN No# 1529.9C

c UL us LISTED

Buderus recommends the use of Beckett, Gordon Piatt, Power Flame and Riello burners for oil/gas firing (Buderus stocks Riello and Beckett burners).

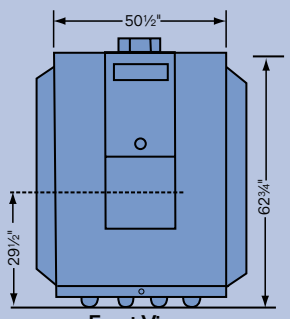

Front View

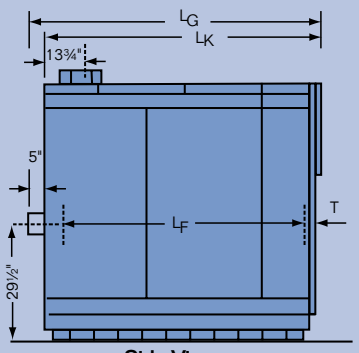

Side View

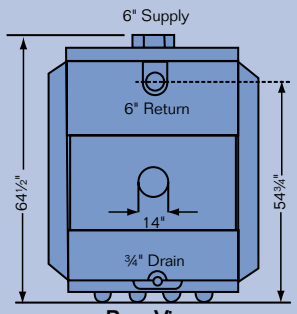

Rear View

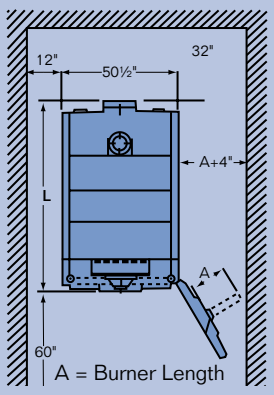

G315 | G515 | G615
Cast Iron Commercial Boilers

A Tradition of Excellence

Buderus has been working with cast iron since 1731. In fact, Buderus produced the world's first low-temperature hydronic heating systems. Today, Buderus products are acknowledged as the world standard in high-efficiency, low emissions hydronic heating. All Buderus products are designed to meet strict safety and environmental regulations.

Buderus boilers are quickly and easily installed, will outlast and outperform virtually any other commercial hot water heating system, and are designed for easy access and service for maintaining the highest possible efficiencies throughout the lifespan of operation.

Commercial Boiler Specifications:

1) There shall be provided and installed a quantity of __ G315, G515 or G615 Buderus sectional cast iron hot water boiler(s) with a total gross output rating of __MBH, suitable for forced draft firing with No. 2 fuel oil, natural gas, or propane. Maximum operating pressure of the boiler(s) shall be 87 psi. They shall bear the ASME stamp and IBR rating.

2) Boiler(s) shall be fabricated with GL-180M high silicone cast iron. They shall be of wet base, double wall, sectional construction with precision machined steel push nipples. Boiler(s) shall have a 5 year warranty against defects in the heat exchanger.

3) Boiler(s) shall be of full three pass design, capable of achieving combustion efficiencies up to 88% on oil and up to 85.6% on gas at full firing rate. Boiler(s) shall contain no refractory material or combustion target wall.

4) Boiler(s) shall be capable of sustained operation at any return water temperature without any means external to the boiler to temper or preheat return water. When operating with standard high temperature controls a water temperature of 122° F must be reached within ten minutes at the boiler supply during burner operation.

5) Access to boiler firesides for inspection and service shall be through a fully insulation and jacketed door, field adjustable for left or right hinging. The seal between door and boiler casing shall be a permanent dry gasket for repeated positive sealing. All flue passages shall be accessible only through the front door and removable rear clean-out covers.

6) Boiler(s) shall be furnished with a heavy-gauge baked enamel jacket with a full 3 ½ or 4 insulation on top and on all sides, flanged water connections and a cast iron flue collector for long life.

Operational Requirements for the G315, G515 and the G615

- Maintain minimum 122° F supply temperature with standard high temperature controls during burner operation within 10 minutes after burner starts up.
- No additional requirements for firing with 2-stage or full modulation burners (gas or oil).
- No minimum return water temperature and no minimum flow requirement.
- Boiler(s) shall nor require any means or return water temperature control or minimum flow condition.

Superior Design

- Designed to operate at any return water temperature
- Full swing burner door for easy and quick, thorough cleaning.
- No refractory parts for reduced maintenance.
- Boiler fully serviced and cleaned from the front.
- Cast iron breaching for long life.
- Thermostream design increases efficiency and system reliability.
- High efficiency through full three pass boiler design.
- No thermal shock as result of unique Thermostream boiler design.
- No minimum water temperature.
- Savings in overall equipment costs, installations and annual operating costs.
- High combustion and thermal efficiencies.

Gross Outputs:	
G315	350 - 768 MBTU/Hr
G515	818 - 1,773 MBTU/Hr
G615	1,951 - 3,982 MBTU/Hr

Buderus

Bosch Thermotechnology Corp.
50 Wentworth Ave
Londonderry, NH 03053
Tel: (603) 552-1100
Fax: (603) 584-1681

www.buderus.net

Subject to change without notice
© 2008 Bosch Thermotechnology Corp.
Part Number 44499017 02/08

Log Out My Schedule

DETAIL SUMMARY			
Pump Series:	60	Pump Size:	1-1/2x5-1/4
Flow Rate: (USGPM)	75	Total Head: (ft.)	15
Pump Speed (RPM)	1750	NPSH req (ft)	16.5
Weight: (lbs)	63	Cost Index:	100
Suction Size: (in)	1.5	Suction Velocity (fps)	11.8
Discharge Size: (in)	1.5	Discharge Velocity: (fps)	11.8
Impeller Diameter: (in)	5.	Efficiency: (%)	52.88
Max Impeller Dia (in)	5.25		
Max Flow (USGPM)	103	Duty Flow/Max Flow (%)	0.73
Flow @ BEP (USGPM)	57	Min. Rec. Flow: (USGPM)	10
Motor Power, HP:	0.75	Frame Size:	143T
Pump Power (BHP)	.56		
Max Power (BHP)	.62	Aprox Wt (lbs)	

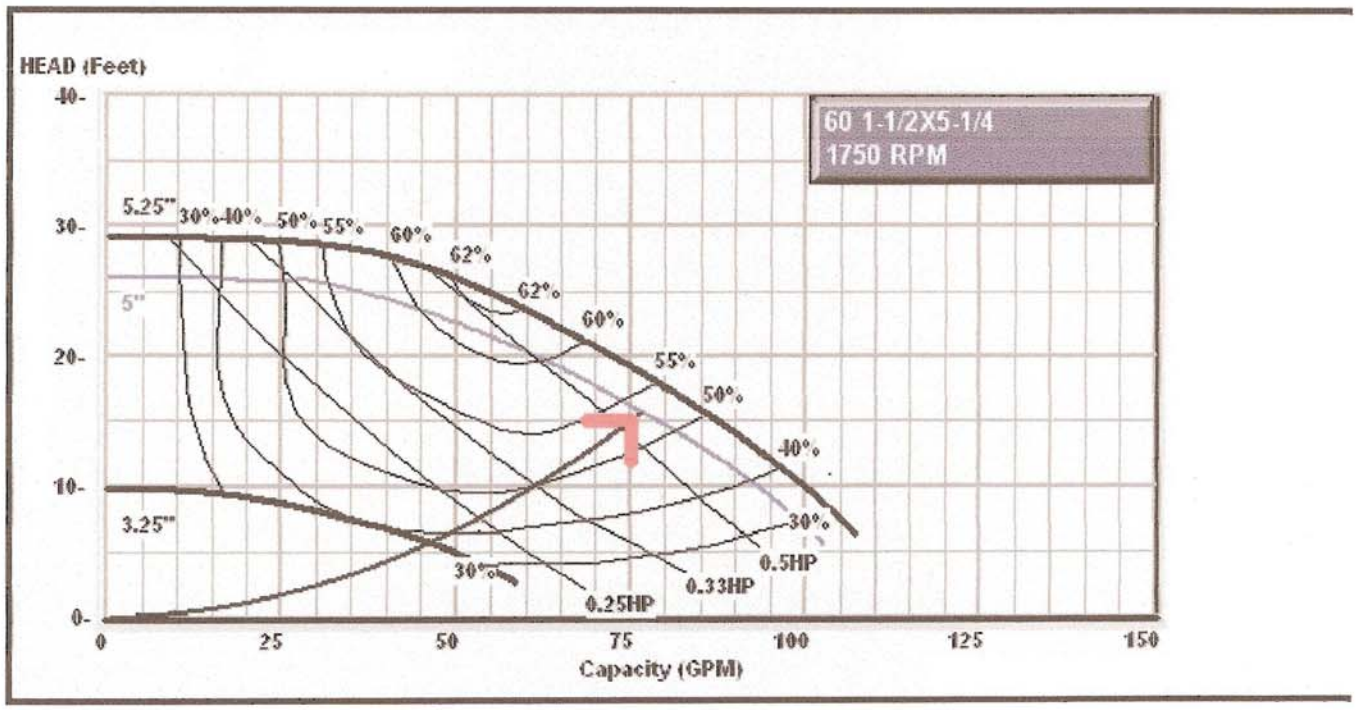

Another Selection | Generate Submittal | Download CAD | Back To Pumps

Log Out My Schedule

DETAIL SUMMARY			
Pump Series:	90	Pump Size:	1-1/2AA
Flow Rate: (USGPM)	75	Total Head: (ft.)	55
Pump Speed (RPM)	3450	NPSH req (ft)	15.4
Weight: (lbs)	66	Cost Index:	100
Suction Size: (in)	1.5	Suction Velocity (fps)	11.8
Discharge Size: (in)	1.5	Discharge Velocity: (fps)	11.8
Impeller Diameter: (in)	4.25	Efficiency: (%)	57.86
Max Impeller Dia (in)	5.25		
Max Flow (USGPM)	107	Duty Flow/Max Flow (%)	0.7
Flow @ BEP (USGPM)	71	Min. Rec. Flow: (USGPM)	18
Motor Power, HP:	2	Frame Size:	145T
Pump Power (BHP)	1.80		
Max Power (BHP)	1.97	Aprox Wt (lbs)	

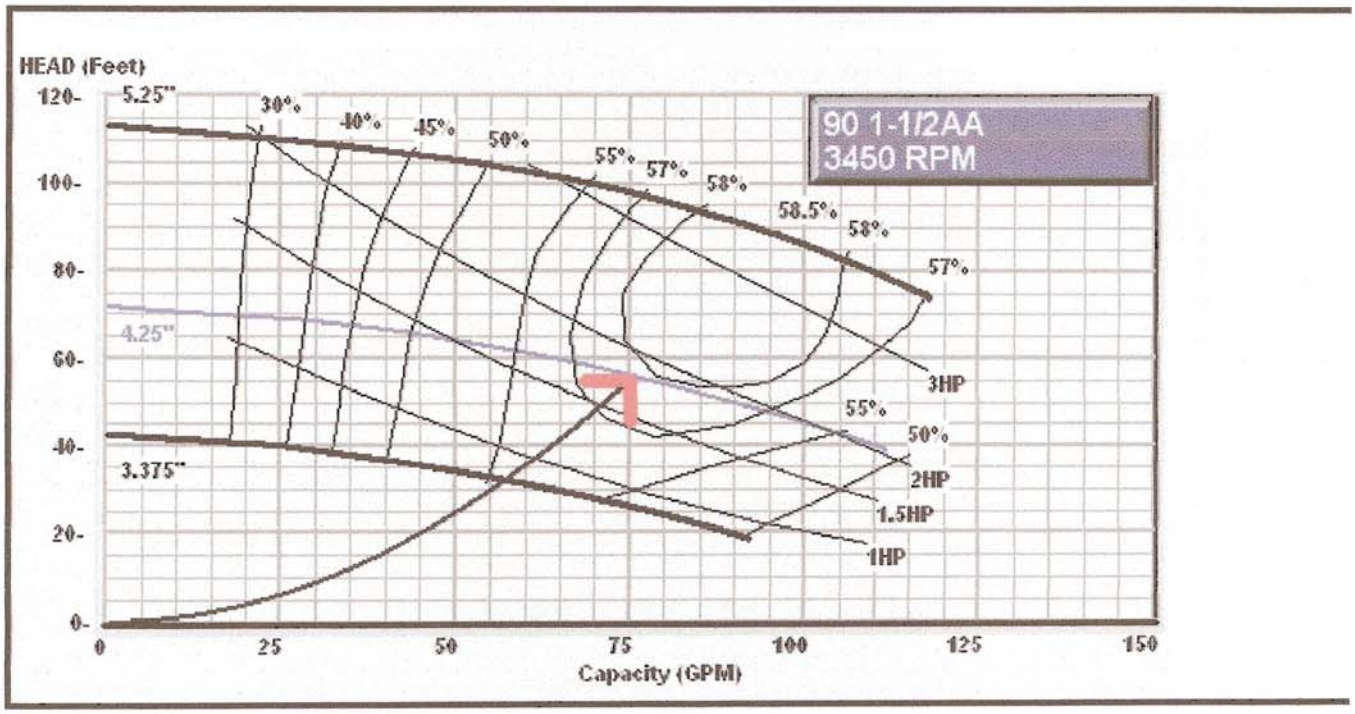

Another Selection | Generate Submittal | Download CAD | Back To Pumps

ITT

SUBMITTAL

A-326.6D

JOB:	**REPRESENTATIVE:**	
UNIT TAG:	**ORDER NO.**	**DATE:**
ENGINEER:	**SUBMITTED BY:**	**DATE:**
CONTRACTOR:	**APPROVED BY:**	**DATE:**

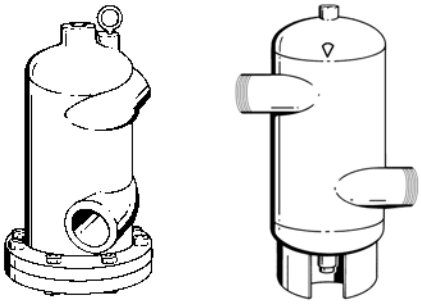

ROLAIRTROL®

Air Separator

NPT Less Strainer

Air Control and Elimination

DESCRIPTION

The Rolairtrol Air Separator is an ASME vessel designed with tangential openings to create a low velocity vortex where air is separated and removed from the circulating water.

MAXIMUM WORKING PRESSURE

125 PSIG (862 kPa)

OPERATING TEMPERATURE RANGE

-20°F (-29°C) to +350°F (177°C)

CONSTRUCTION MATERIALS

- Designed and constructed per ASME Section VIII, Division 1
- Body − Models R−2 & R−2-1/2: Cast Iron
- Shell − Models R−3: Carbon Steel
- Air Collector Tube: Stainless steel with 5/32" (4mm) diameter perforations and 63% open area
- Collector Tube Support Assembly: Carbon Steel
- Bottom Reducing Flange Gasket: Armide fiber (RL−2 & RL−2-1/2 Models Only)

SCHEDULE

PART NUMBER	MODEL NUMBER	Capacity GPM (m^3/hr)	NPT Tangential Opening in. (mm)	TAGGING INFORMATION	QUANTITY
5363-02N-12-001	RL−2N	56 (12.7)	2 (50.8)		
5363-25N-12-001	RL−2-1/2N	90 (20.4)	2-1/2 (63.5)		
5363-03N-12-003	RL−3N	190 (43.2)	3 (76.2)		
5363-03N-12-004	RL−3NB	190 (43.2)	3 (76.2)		

© COPYRIGHT 2008 ITT Corporation

Bell & Gossett

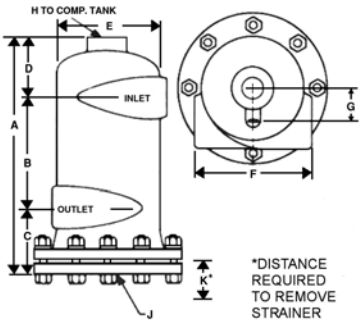

2" & 2-1/2"
With & Without Strainer

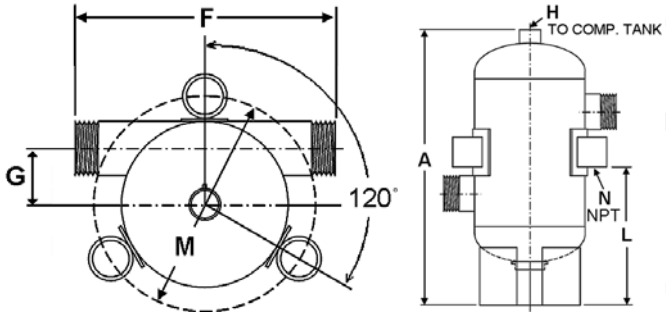

3" MODELS LESS STRAINER
AND OPTIONAL BRACKET SUPPORTS

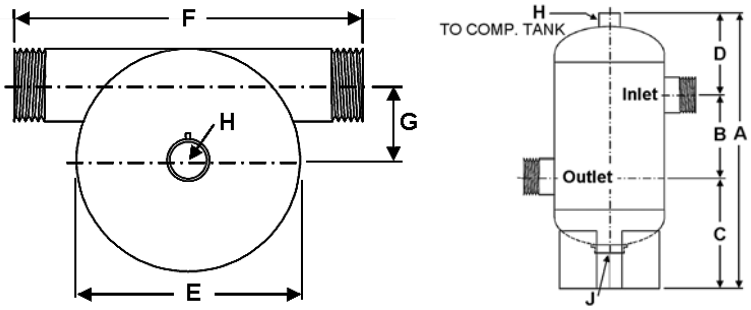

3" MODELS LESS STRAINER

DIMENSIONS in Inches (mm) AND WEIGHTS in Lbs (kg.)

MODEL NUMBER	A	B	C	D	E	F	G	H	J	Cv	Approx. Volume in Gallons (Ltr.)	Approx. Shpg. Wt. in. Lbs. (Kg)	Flood Wt. Less Bracket in Lbs. (Kg)
RL−2N	15-7/8 (403)	7 (179)	4 (102)	4-7/8 (124)	6-5/8 (168)	7-3/8 (187)	2 (51)	1 (25)	1 (25)	55	2 (7.6)	50 (23)	65 (30)
RL−2-1/2N	17-3/8 (441)	7-1/2 (191)	4-1/2 (114)	5-3/8 (137)	8-3/8 (213)	9-3/4 (248)	2-5/8 (67)	1 (25)	1 (25)	80	3 (11.4)	85 (39)	110 (50)
RL−3N (B)	26-7/8 (683)	8 (203)	10-13/16 (275)	8-1/16 (205)	10-3/4 (273)	16-3/4 (426)	3-5/8 (92)	1-1/4 (32)	2 (51)	215	7 (26.5)	65 (30)	120 (54)

Important Note: Dimensions not to be used for construction.

MODEL NUMBER	L	M	N	Weights of Brackets
RL−3NB	13-3/8 (340)	14 (356)	2 (51)	9 (4)

MODEL NUMBERING

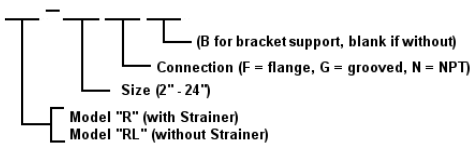

SUPPORT NOTES:

1. Model "R" Rolairtrol Air Separators have strainers which must be removed and cleaned after 24 hours operation, 30 days operation and as required to maintain proper system air separation. Before installing the model "R" Rolairtrol, refer to (K) in the dimensions and weights table, which notes minimum distances to be maintained between the blowdown connection and the floor or other equipment for strainer removal.
2. Lifting lugs are for the transportation and installation of the empty vessel, and are not to be used for complete or partial support of the flood vessel.
3. The RL skirt can support flooded vessel weight, but an R model bottom flange (strainer housing) cannot support the flooded weight of the vessel.
4. Welding to the pressure vessel boundary will void the ASME stamp.
5. Standard Rolairtrol design can be hung using hangers up to 12" in size from the nozzles. Optional, factory welded, support brackets are available for an additional cost.

ITT
8200 N. Austin Avenue
Morton Grove, IL 60053
Phone (847)966-3700
Facsimile (847)966-9052
www.bellgossett.com

RL MODELS (WITHOUT STRAINER)

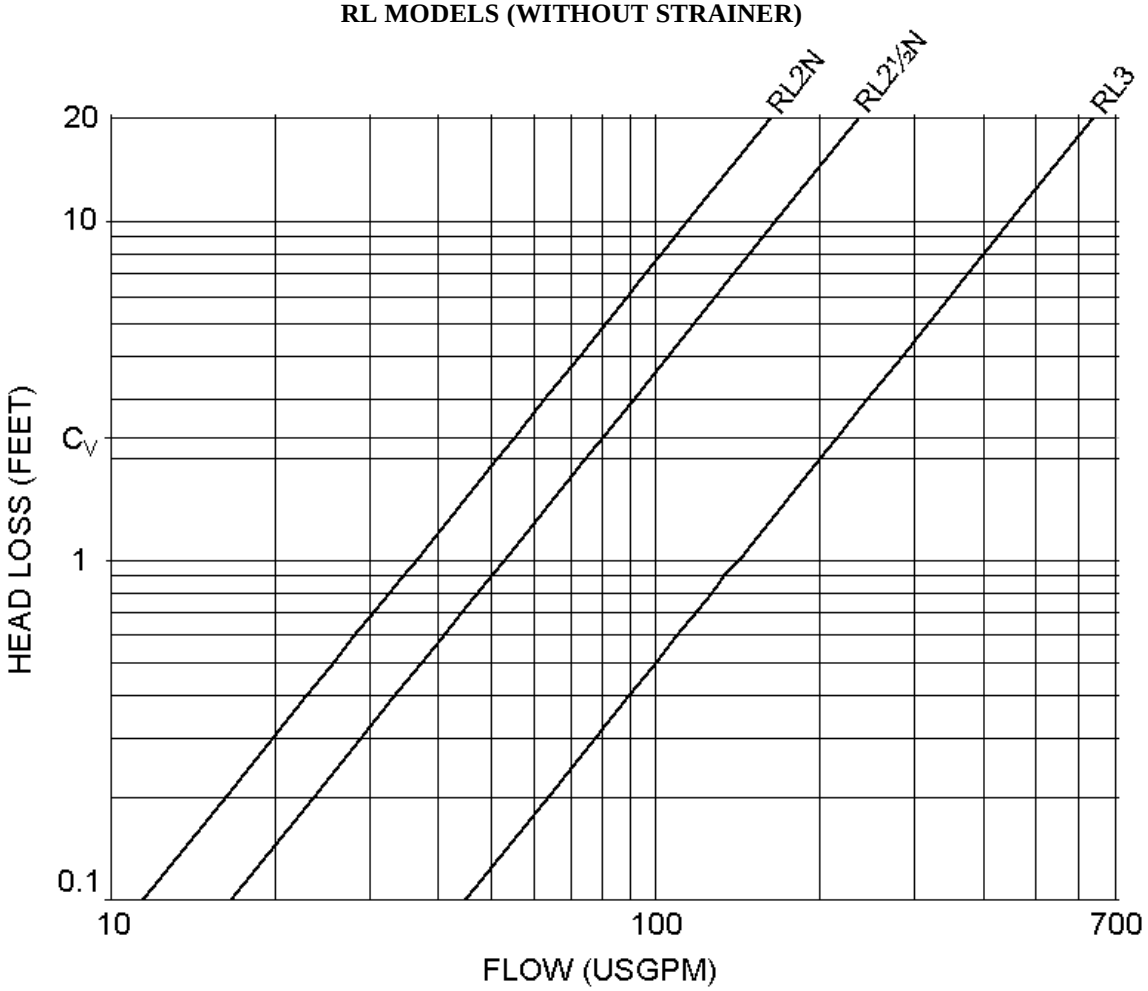

Note: Pressure drops for a range of flow are indicated on this chart. Users should select Rolairtrol using B&G published capacity guidance, and ASHRAE pipe sizing recommendations for optimal performance.

TYPICAL ROLAIRTROL SPECIFICATIONS

Furnish and install, as shown on plans, a centrifugal type air separator. The unit shall have ____ " inlet and outlet NPT connections tangential to the vessel shell. The unit shall have an internal stainless steel air collector tube with 5/32" (4mm) diameter perforations and 63 percent open area designed to direct accumulated air to the compression tank (air control system) or air vent (air elimination system) via an NPT vent connection at top of unit.

A blowdown connection shall be provided to facilitate routine cleaning of the strainer and the separator. Specify B&G Model MBV- 1 Rolairtrol accessory for manual blowdown.

Vessel shell diameter to be three times the nominal inlet/outlet pipe diameter, with a minimum vessel volume for sufficient velocity reduction.

The air separator must be designed, constructed and stamped for 125 psig @ 375°F (862 kPa @ 191°C) in accordance with Section VIII, Division I of the ASME Boiler and Pressure Vessel Code, and registered with the National Board of Boiler and Pressure Vessel Inspectors. The air separator(s) shall be painted with one shop coat of light gray air dry enamel.

A manufacturer's Data Report for Pressure Vessels, Form U-1 as required by the provisions of the ASME Boiler and Pressure Vessel Code, shall be furnished for each air separator upon request.

Each air separator shall be ITT Bell & Gossett Model No. _____ Rolairtrol Air Separator for _____ GPM (_____ m^3), Shell Dia. _____" (_____ mm)and Min. Vessel Volume _____ Gal (_____ liters).

Refer to submittal A-329 for information on the MBV-1 manual blowdown valve.

ITT
8200 N. Austin Avenue
Morton Grove, IL 60053
Phone (847)966-3700
Facsimile (847)966-9052
www.bellgossett.com

ITT

SUBMITTAL

A-344E

JOB:	**REPRESENTATIVE:**	
UNIT TAG:	**ORDER NO.**	**DATE:**
ENGINEER:	**SUBMITTED BY:**	**DATE:**
CONTRACTOR:	**APPROVED BY:**	**DATE:**

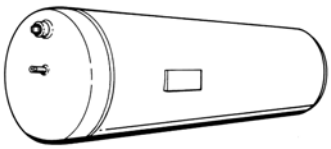

Series "D" (ASME) Pressurized Expansion Tanks Horizontal

Not For Potable Water Systems

DESCRIPTION

Series "D" expansion tanks are ASME rated precharged diaphragm-type pressure vessels. The Series "D" tank is designed to absorb the expansion forces of heating/cooling system water while maintaining proper system pressurization under varying operating conditions. The heavy duty diaphragm separates system water from the tank air charge thereby eliminating waterlogging problems.

CONSTRUCTION

Shell: Carbon Steel
Diaphragm: Heavy Duty Butyl Rubber
System Connection: Forged Steel
Designed and Constructed per ASME Section VIII, Division 1

PERFORMANCE LIMITATIONS

Maximum Design Pressure: 125 PSI (862kPa)
Design Temperature: 240°F (115°C)

SCHEDULE

PART NUMBER	MODEL NO.	VOLUME GALLONS (LITERS)		TAGGING INFORMATION	QUANTITY
		TANK	ACCEPTANCE		
116500	D-15	8.0 (30.3)	2.4 (9.1)		
116501	D-20	10.9 (41.3)	2.4 (9.1)		
116502	D-40	21.7 (82.1)	11.3 (42.8)		
116503	D-60	33.6 (127.2)	11.3 (42.8)		
116504	D-80	44.4 (168.1)	22.6 (85.5)		
116505	D-100	55.7 (211.8)	22.6 (85.5)		
116506	D-120	68.0 (257.4)	34.0 (128.7)		
116507	D-144	77.0 (291.5)	34.0 (128.7)		
116508	D-180	90.0 (340.7)	34.0 (128.7)		
116509	D-200	110.0 (416.4)	34.0 (128.7)		
116510	D-240	132.0 (500)	46.0 (174.1)		
116778	D-260	159.0 (600)	56.0 (212.0)		
116779	D-280	211.0 (800)	84.0 (318.0)		

TYPICAL SPECIFICATION

Furnish and install as shown on plans a _____ gallon (_____ liter) _____" (_____ mm) diameter x _____" (_____ mm) high pre-charged horizontal steel expansion tank with integral heavy duty Butyl rubber diaphragm. The tank shall have ___" NPT system connection(s), and a .302"-32 charging valve connection (standard tire valve) to facilitate the on-site charging of the tank to meet system requirements.

The tank must be constructed in accordance with Section VIII of the ASME Boiler and Pressure Vessel Code and stamped 125 PSI (862 kPa) working pressure.

Each tank shall be ITT − Bell & Gossett Model No. _____

© COPYRIGHT 2007 ITT Corporation

Bell & Gossett

ASME EXPANSION TANKS - PRESSURIZED

A-344E

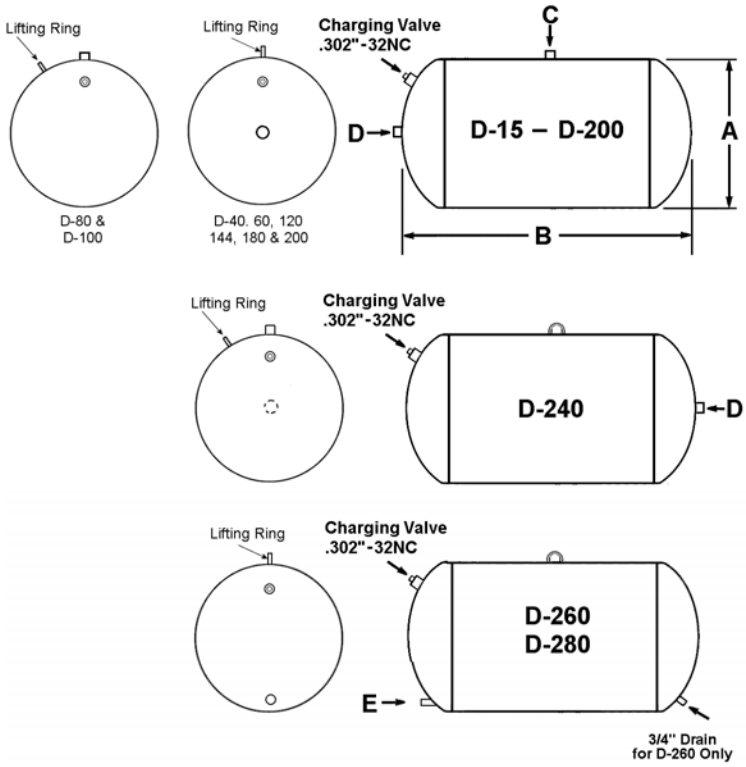

NOTE: Tanks are factory pre-charged at 12 psi (83 kPa)
Sight glass and seismic restraints available.

DIMENSIONS AND WEIGHTS

MODEL NUMBER	DIMENSIONS IN INCHES (MM)					APPROX. SHPG. WT. LBS. (Kg)	APPROX. WT* 100% FULL LBS. (Kg)
			SYSTEM CONNECTIONS - NPTM				
	A	B	C	D	E		
D-15**	12 (305)	19-1/4 (489)	N/A	1/2	N/A	37 (17)	102 (46)
D-20**	12 (305)	26-1/4 (667)	N/A	1/2	N/A	46 (21)	137 (62)
D-40	16-1/4 (413)	29 (737)	N/A	1/2	N/A	82 (37)	263 (119)
D-60	16-1/4 (413)	42-1/4 (1073)	N/A	1/2	N/A	103 (47)	383 (174)
D-80	16-1/4 (413)	56-7/8 (1445)	1/2	N/A	N/A	145 (66)	516 (234)
D-100	16-1/4 (413)	69 (1753)	1/2	N/A	N/A	167 (76)	632 (287)
D-120	24 (610)	39-7/8 (1013)	N/A	1	N/A	210 (95)	778 (353)
D-144	24 (610)	44-3/4 (1137)	N/A	1	N/A	240 (109)	883 (401)
D-180	24 (610)	52-1/8 (1324)	N/A	1	N/A	242 (110)	993 (450)
D-200	24 (610)	62-5/8 (1591)	N/A	1	N/A	275 (125)	1193 (541)
D-240	30 (762)	49-5/8 (1260)	N/A	1	N/A	398 (181)	1500 (680)
D-260	30 (762)	58 (1473)	N/A	N/A	1-1/4	550 (250)	1869 (850)
D-280	30 (762)	75-3/4 (1924)	N/A	N/A	1-1/4	700 (318)	2461 (1119)

N/A − NOT APPLICABLE
Dimensions are subject to change. Not to be used for construction purposes unless certified.
*Approximate weight 100% full occurs if diaphragm fails.
**No lifting ring

ITT
8200 N. Austin Avenue
Morton Grove, IL 60053
Phone (847)966-3700
Facsimile (847)966-9052
www.bellgossett.com

Bell & Gossett Plate and Frame Heat Exchanger Specification Sheet

www.bellgossett.com

Quotation No.: NSA04/09 Item No.: Fraser Valley Elementary School Date: 4/28/2009 12:57:59 PM

Model: P14-20-TM "C" Version: 1.0.0.87

	Side 1		Side 2	
Fluid Name	PropGlycol - 35%		Water	
Total Flow	53.00	(g.p.m.)	45.00	(g.p.m.)
Inlet Temperature	180.00	(°F)	160.00	(°F)
Outlet Temperature	169.86	(°F)	171.50	(°F)
Pressure Drop, (calc)	3.83	(PSI)	3.38	(PSI)
Density	62.11	(Lb/Ft³)	60.87	(Lb/Ft³)
Mean Viscosity	0.86	(cP)	0.41	(cP)
Wall Viscosity	0.95	(cP)	0.38	(cP)
Specific Heat	0.94	(Btu/Lb*F)	1.00	(Btu/Lb*F)
Thermal Conductivity	0.27	(Btu/h*Ft*F)	0.38	(Btu/h*Ft*F)
HTC Clean/Service	950.40	(Btu/Ft²)	950.40	(Btu/Ft²)

Total Heat Exchanged	253,063.91 (Btu/h)
LMTD	9.16 (°F)

Plate Arrangement	1 x 10	1 x 9
Number of Plates (Total/Max)	20	39
Pressure Design/Test	150.00 (PSI)	195.00 (PSI)
Design Temperature	257 (°F)	257 (°F)
Est. Weight (Empty/Operating)	347 LBS	363 LBS

Side-1 Inlet Connection	(F1) 2 inch Steel Female NPT
Side-1 Outlet Connection	(F4) 2 inch Steel Female NPT
Side-2 Inlet Connection	(F3) 2 inch Steel Female NPT
Side-2 Outlet Connection	(F2) 2 inch Steel Female NPT
Frame Size	400 mm
Total Heat Transfer Surface Area	29.06 (Ft²)
Total Internal Volume	0.23 (Ft³)
Plate Material/Thickness	AISI316 / 0.5 mm
Plate Mix	TM
Gasket Material	NITRILE HANG ON (H)

Approvals: ASME w/ 'U' Stamp

REV NO.	REVISION NOTE	REV BY	REV DATE

NOTE(s): 1. DIMENSIONS SHOWN IN INCHES AND [mm].
2. ASME U-STAMP PER SECTION VIII, DIV 1.

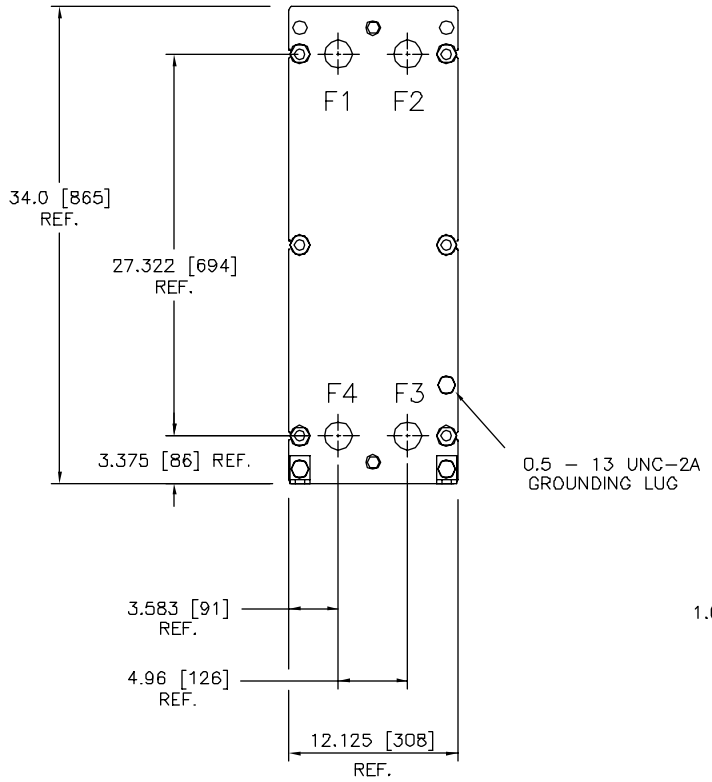

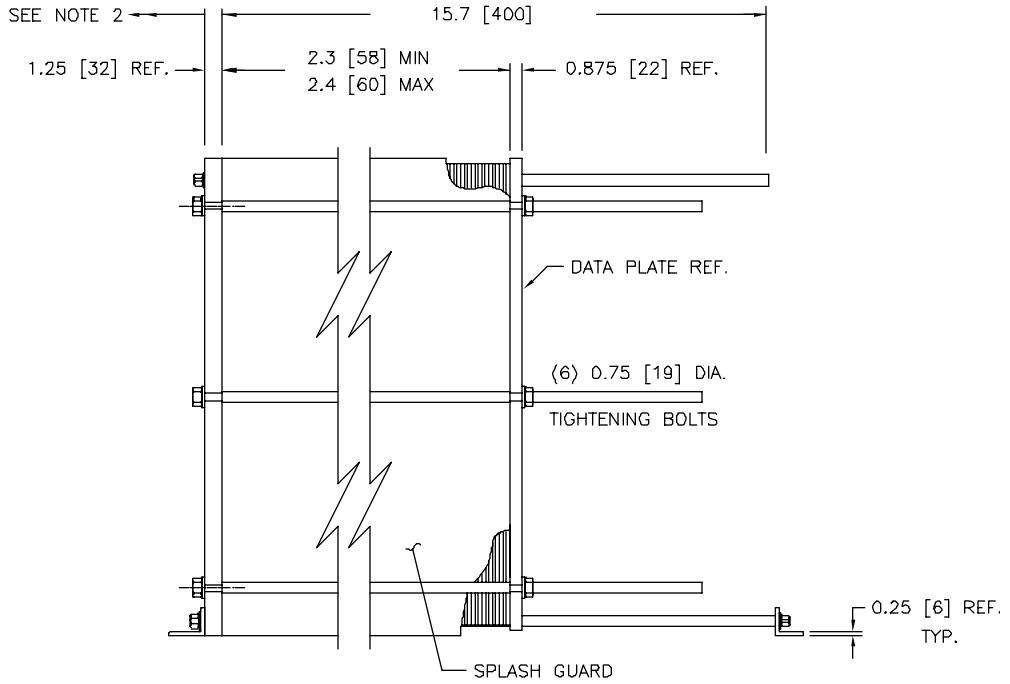

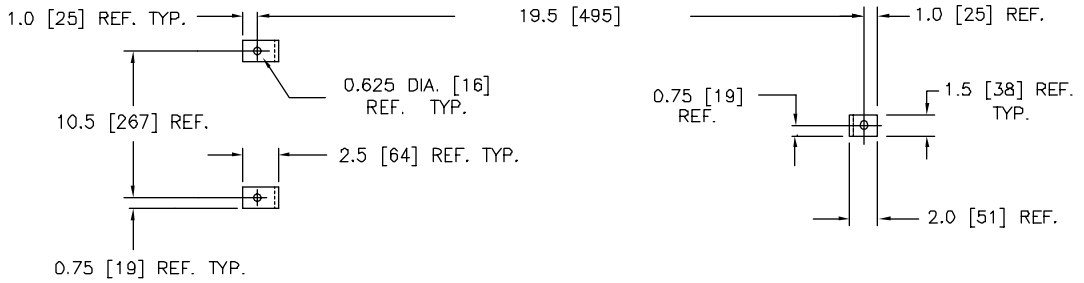

UNIT CONSTRUCTION – ASME CODE		DESIGN CONDITIONS:	SIDE-1	SIDE-2
THERMAL PLATES:	0.5mm / AISI316	DSGN PRESS. (PSIG)	150	150
GASKET TYPE:	NITRILE – HANG	TEST PRESS. (PSIG)	195	195
PLATE MIXTURE:	TM	DSGN TEMP. (°F)	248	248
MIX (SIDE 1):	1 x 10	MIN. TEMP. (°F)	32	32
MIX (SIDE 2):	1 x 9			
PLATE QUANTITY:	20 / 39 MAX			
CARRY BAR LGTH:	400mm			
CARRY BAR MTL:	SS			
TIE BOLTS:	STEEL (ZINC PLATED)			
WEIGHT DRY/FULL:	347 / 363 (LBS)			

PORT IDENTIFICATION		CONNECTION – TYPE AND DESCRIPTION
F1	SIDE-1 IN	2" NPT (INTERNAL), STEEL
F4	SIDE-1 OUT	2" NPT (INTERNAL), STEEL
F3	SIDE-2 IN	2" NPT (INTERNAL), STEEL
F2	SIDE-2 OUT	2" NPT (INTERNAL), STEEL

This document contains material and/or information which is the property of ITT Corporation, and supplied only on a confidential basis. No transmittal or disclosure shall be made to any person, firm, or corporation without prior written approval of ITT Corporation, or its Heat Transfer Technology unit.

ITT ORDER NO.	MADE:	CHK:
NA	ITT 04/28/09	HT 04/28/09

ITT Bell & Gossett

MODEL P14A

HX-1--1

REV.

Log Out My Schedule

DETAIL SUMMARY			
Pump Series:	60	Pump Size:	1-1/2x5-1/4
Flow Rate: (USGPM)	45	Total Head: (ft.)	25
Pump Speed (RPM)	1750	NPSH req (ft)	7.1
Weight: (lbs)	63	Cost Index:	100
Suction Size: (in)	1.5	Suction Velocity (fps)	7.1
Discharge Size: (in)	1.5	Discharge Velocity: (fps)	7.1
Impeller Diameter: (in)	5.125	Efficiency: (%)	60.17
Max Impeller Dia (in)	5.25		
Max Flow (USGPM)	105	Duty Flow/Max Flow (%)	0.43
Flow @ BEP (USGPM)	59	Min. Rec. Flow: (USGPM)	10
Motor Power, HP:	0.75	Frame Size:	143T
Pump Power (BHP)	.47		
Max Power (BHP)	.67	Aprox Wt (lbs)	

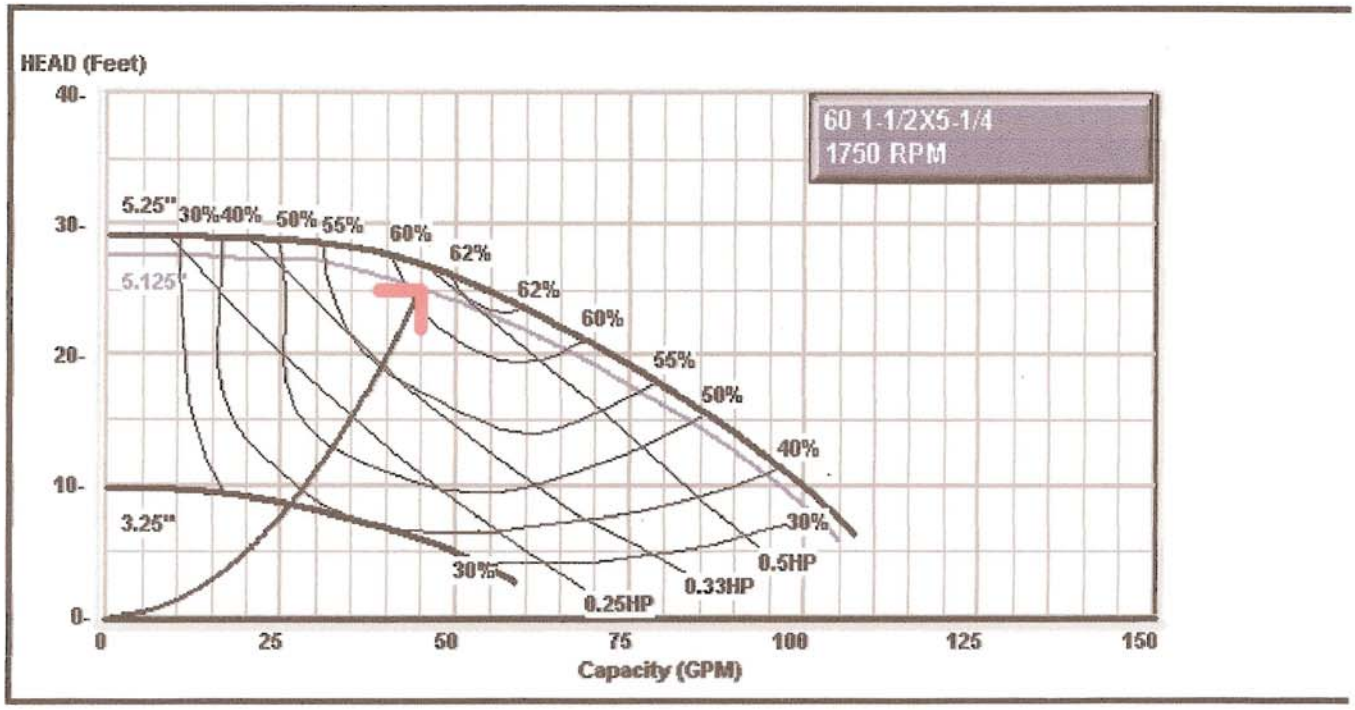

Another Selection | Generate Submittal | Download CAD | Back To Pumps

ITT

SUBMITTAL

A-326.6D

JOB:	**REPRESENTATIVE:**	
UNIT TAG:	**ORDER NO.**	**DATE:**
ENGINEER:	**SUBMITTED BY:**	**DATE:**
CONTRACTOR:	**APPROVED BY:**	**DATE:**

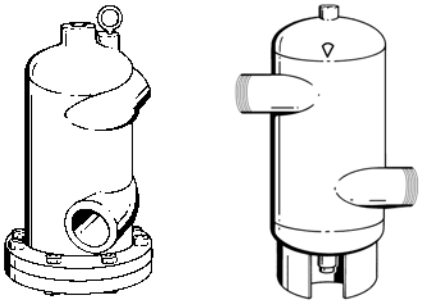

ROLAIRTROL®

Air Separator

NPT Less Strainer

Air Control and Elimination

DESCRIPTION

The Rolairtrol Air Separator is an ASME vessel designed with tangential openings to create a low velocity vortex where air is separated and removed from the circulating water.

MAXIMUM WORKING PRESSURE

125 PSIG (862 kPa)

OPERATING TEMPERATURE RANGE

-20°F (-29°C) to +350°F (177°C)

CONSTRUCTION MATERIALS

- Designed and constructed per ASME Section VIII, Division 1
- Body − Models R−2 & R−2-1/2: Cast Iron
- Shell − Models R−3: Carbon Steel
- Air Collector Tube: Stainless steel with 5/32" (4mm) diameter perforations and 63% open area
- Collector Tube Support Assembly: Carbon Steel
- Bottom Reducing Flange Gasket: Armide fiber (RL−2 & RL−2-1/2 Models Only)

SCHEDULE

PART NUMBER	MODEL NUMBER	Capacity GPM (m^3/hr)	NPT Tangential Opening in. (mm)	TAGGING INFORMATION	QUANTITY
5363-02N-12-001	RL−2N	56 (12.7)	2 (50.8)		
5363-25N-12-001	RL−2-1/2N	90 (20.4)	2-1/2 (63.5)		
5363-03N-12-003	RL−3N	190 (43.2)	3 (76.2)		
5363-03N-12-004	RL−3NB	190 (43.2)	3 (76.2)		

© COPYRIGHT 2008 ITT Corporation

Bell & Gossett

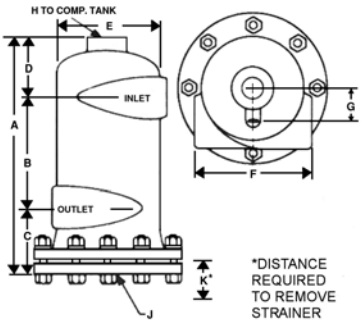

2" & 2-1/2"
With & Without Strainer

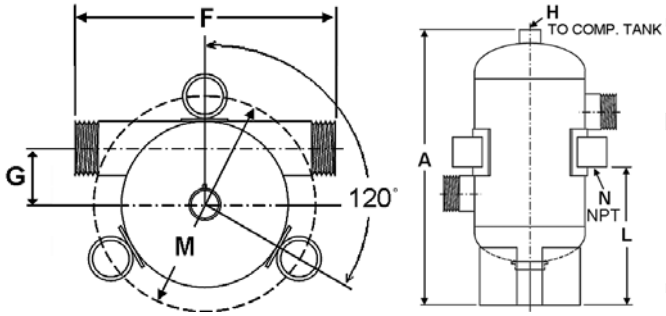

3" MODELS LESS STRAINER
AND OPTIONAL BRACKET SUPPORTS

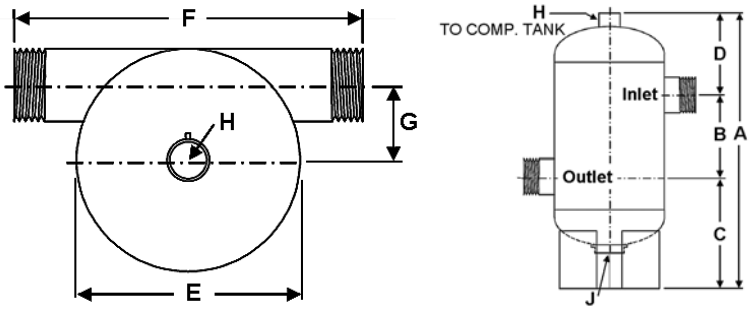

3" MODELS LESS STRAINER

DIMENSIONS in Inches (mm) AND WEIGHTS in Lbs (kg.)

MODEL NUMBER	A	B	C	D	E	F	G	H	J	Cv	Approx. Volume in Gallons (Ltr.)	Approx. Shpg. Wt. in. Lbs. (Kg)	Flood Wt. Less Bracket in Lbs. (Kg)
RL−2N	15-7/8 (403)	7 (179)	4 (102)	4-7/8 (124)	6-5/8 (168)	7-3/8 (187)	2 (51)	1 (25)	1 (25)	55	2 (7.6)	50 (23)	65 (30)
RL−2-1/2N	17-3/8 (441)	7-1/2 (191)	4-1/2 (114)	5-3/8 (137)	8-3/8 (213)	9-3/4 (248)	2-5/8 (67)	1 (25)	1 (25)	80	3 (11.4)	85 (39)	110 (50)
RL−3N (B)	26-7/8 (683)	8 (203)	10-13/16 (275)	8-1/16 (205)	10-3/4 (273)	16-3/4 (426)	3-5/8 (92)	1-1/4 (32)	2 (51)	215	7 (26.5)	65 (30)	120 (54)

Important Note: Dimensions not to be used for construction.

MODEL NUMBER	L	M	N	Weights of Brackets
RL−3NB	13-3/8 (340)	14 (356)	2 (51)	9 (4)

MODEL NUMBERING

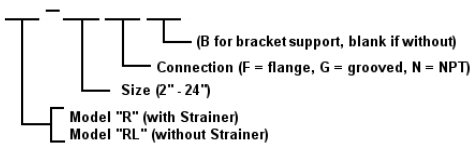

SUPPORT NOTES:

1. Model "R" Rolairtrol Air Separators have strainers which must be removed and cleaned after 24 hours operation, 30 days operation and as required to maintain proper system air separation. Before installing the model "R" Rolairtrol, refer to (K) in the dimensions and weights table, which notes minimum distances to be maintained between the blowdown connection and the floor or other equipment for strainer removal.
2. Lifting lugs are for the transportation and installation of the empty vessel, and are not to be used for complete or partial support of the flood vessel.
3. The RL skirt can support flooded vessel weight, but an R model bottom flange (strainer housing) cannot support the flooded weight of the vessel.
4. Welding to the pressure vessel boundary will void the ASME stamp.
5. Standard Rolairtrol design can be hung using hangers up to 12" in size from the nozzles. Optional, factory welded, support brackets are available for an additional cost.

ITT
8200 N. Austin Avenue
Morton Grove, IL 60053
Phone (847)966-3700
Facsimile (847)966-9052
www.bellgossett.com

RL MODELS (WITHOUT STRAINER)

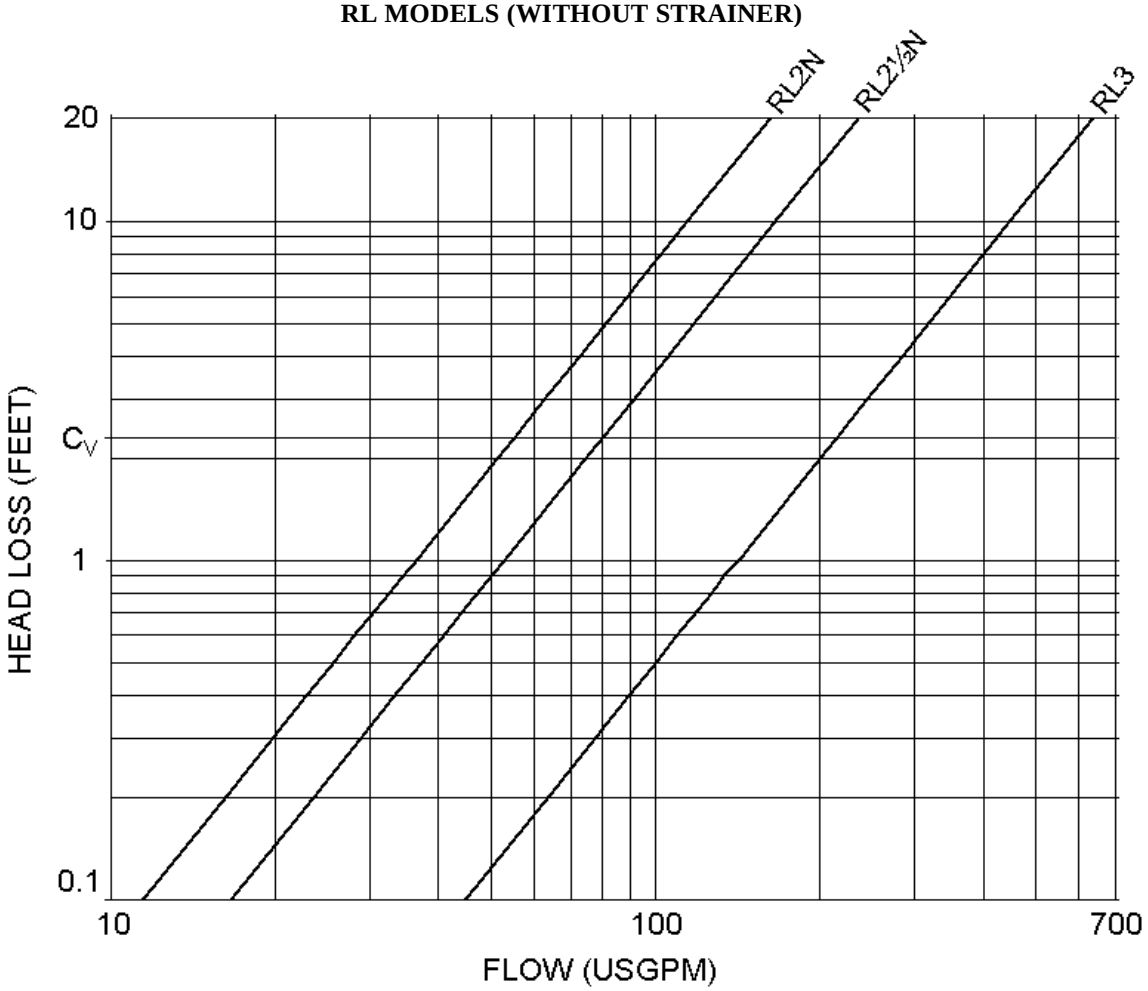

Note: Pressure drops for a range of flow are indicated on this chart. Users should select Rolairtrol using B&G published capacity guidance, and ASHRAE pipe sizing recommendations for optimal performance.

TYPICAL ROLAIRTROL SPECIFICATIONS

Furnish and install, as shown on plans, a centrifugal type air separator. The unit shall have ____ " inlet and outlet NPT connections tangential to the vessel shell. The unit shall have an internal stainless steel air collector tube with 5/32" (4mm) diameter perforations and 63 percent open area designed to direct accumulated air to the compression tank (air control system) or air vent (air elimination system) via an NPT vent connection at top of unit.

A blowdown connection shall be provided to facilitate routine cleaning of the strainer and the separator. Specify B&G Model MBV- 1 Rolairtrol accessory for manual blowdown.

Vessel shell diameter to be three times the nominal inlet/outlet pipe diameter, with a minimum vessel volume for sufficient velocity reduction.

The air separator must be designed, constructed and stamped for 125 psig @ 375°F (862 kPa @ 191°C) in accordance with Section VIII, Division I of the ASME Boiler and Pressure Vessel Code, and registered with the National Board of Boiler and Pressure Vessel Inspectors. The air separator(s) shall be painted with one shop coat of light gray air dry enamel.

A manufacturer's Data Report for Pressure Vessels, Form U-1 as required by the provisions of the ASME Boiler and Pressure Vessel Code, shall be furnished for each air separator upon request.

Each air separator shall be ITT Bell & Gossett Model No. _____ Rolairtrol Air Separator for _____ GPM (_____ m^3), Shell Dia. _____" (_____ mm)and Min. Vessel Volume _____ Gal (_____ liters).

Refer to submittal A-329 for information on the MBV-1 manual blowdown valve.

ITT
8200 N. Austin Avenue
Morton Grove, IL 60053
Phone (847)966-3700
Facsimile (847)966-9052
www.bellgossett.com

ITT

SUBMITTAL

A-344E

JOB:	**REPRESENTATIVE:**	
UNIT TAG:	**ORDER NO.**	**DATE:**
ENGINEER:	**SUBMITTED BY:**	**DATE:**
CONTRACTOR:	**APPROVED BY:**	**DATE:**

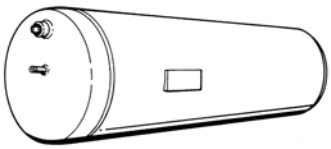

Series "D" (ASME) Pressurized Expansion Tanks Horizontal

Not For Potable Water Systems

DESCRIPTION

Series "D" expansion tanks are ASME rated precharged diaphragm-type pressure vessels. The Series "D" tank is designed to absorb the expansion forces of heating/cooling system water while maintaining proper system pressurization under varying operating conditions. The heavy duty diaphragm separates system water from the tank air charge thereby eliminating waterlogging problems.

CONSTRUCTION

Shell: Carbon Steel
Diaphragm: Heavy Duty Butyl Rubber
System Connection: Forged Steel
Designed and Constructed per ASME Section VIII, Division 1

PERFORMANCE LIMITATIONS

Maximum Design Pressure: 125 PSI (862kPa)
Design Temperature: 240°F (115°C)

SCHEDULE

PART NUMBER	MODEL NO.	VOLUME GALLONS (LITERS)		TAGGING INFORMATION	QUANTITY
		TANK	ACCEPTANCE		
116500	D-15	8.0 (30.3)	2.4 (9.1)		
116501	D-20	10.9 (41.3)	2.4 (9.1)		
116502	D-40	21.7 (82.1)	11.3 (42.8)		
116503	D-60	33.6 (127.2)	11.3 (42.8)		
116504	D-80	44.4 (168.1)	22.6 (85.5)		
116505	D-100	55.7 (211.8)	22.6 (85.5)		
116506	D-120	68.0 (257.4)	34.0 (128.7)		
116507	D-144	77.0 (291.5)	34.0 (128.7)		
116508	D-180	90.0 (340.7)	34.0 (128.7)		
116509	D-200	110.0 (416.4)	34.0 (128.7)		
116510	D-240	132.0 (500)	46.0 (174.1)		
116778	D-260	159.0 (600)	56.0 (212.0)		
116779	D-280	211.0 (800)	84.0 (318.0)		

TYPICAL SPECIFICATION

Furnish and install as shown on plans a _____ gallon (_____ liter) _____" (_____ mm) diameter x _____" (_____ mm) high pre-charged horizontal steel expansion tank with integral heavy duty Butyl rubber diaphragm. The tank shall have ___" NPT system connection(s), and a .302"-32 charging valve connection (standard tire valve) to facilitate the on-site charging of the tank to meet system requirements.

The tank must be constructed in accordance with Section VIII of the ASME Boiler and Pressure Vessel Code and stamped 125 PSI (862 kPa) working pressure.

Each tank shall be ITT − Bell & Gossett Model No. _____

© COPYRIGHT 2007 ITT Corporation

Bell & Gossett

ASME EXPANSION TANKS - PRESSURIZED

A-344E

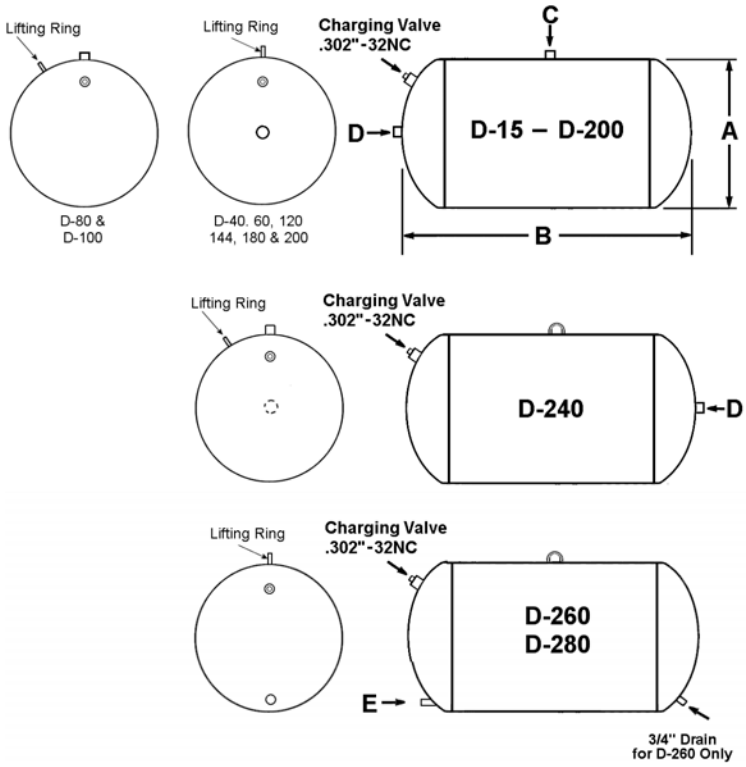

NOTE: Tanks are factory pre-charged at 12 psi (83 kPa)
Sight glass and seismic restraints available.

DIMENSIONS AND WEIGHTS

MODEL NUMBER	DIMENSIONS IN INCHES (MM)					APPROX. SHPG. WT. LBS. (Kg)	APPROX. WT* 100% FULL LBS. (Kg)
			SYSTEM CONNECTIONS - NPTM				
	A	B	C	D	E		
D-15**	12 (305)	19-1/4 (489)	N/A	1/2	N/A	37 (17)	102 (46)
D-20**	12 (305)	26-1/4 (667)	N/A	1/2	N/A	46 (21)	137 (62)
D-40	16-1/4 (413)	29 (737)	N/A	1/2	N/A	82 (37)	263 (119)
D-60	16-1/4 (413)	42-1/4 (1073)	N/A	1/2	N/A	103 (47)	383 (174)
D-80	16-1/4 (413)	56-7/8 (1445)	1/2	N/A	N/A	145 (66)	516 (234)
D-100	16-1/4 (413)	69 (1753)	1/2	N/A	N/A	167 (76)	632 (287)
D-120	24 (610)	39-7/8 (1013)	N/A	1	N/A	210 (95)	778 (353)
D-144	24 (610)	44-3/4 (1137)	N/A	1	N/A	240 (109)	883 (401)
D-180	24 (610)	52-1/8 (1324)	N/A	1	N/A	242 (110)	993 (450)
D-200	24 (610)	62-5/8 (1591)	N/A	1	N/A	275 (125)	1193 (541)
D-240	30 (762)	49-5/8 (1260)	N/A	1	N/A	398 (181)	1500 (680)
D-260	30 (762)	58 (1473)	N/A	N/A	1-1/4	550 (250)	1869 (850)
D-280	30 (762)	75-3/4 (1924)	N/A	N/A	1-1/4	700 (318)	2461 (1119)

N/A − NOT APPLICABLE
Dimensions are subject to change. Not to be used for construction purposes unless certified.
*Approximate weight 100% full occurs if diaphragm fails.
**No lifting ring

ITT
8200 N. Austin Avenue
Morton Grove, IL 60053
Phone (847)966-3700
Facsimile (847)966-9052
www.bellgossett.com

Des Champs Laboratories Inc
ZDUCT Thermodynamic Performance

Box 220, Natural Bridge Station, VA 24579
Phone: (540) 291-1111 Fax: (540) 291-2211

4/29/2009 6:37:16 PM Ver. 4.2.25
Marketing@Entrodyne.com

Order Name	Granby School	Location	-
Order Number	0	Prepared By	kd
(Qty) Model	(1)MIN02	Unit Tag	-
Representative	Trane	Engineering Firm	Honeywell Building Solutions
Altitude	8000		

WINTER HVAC OR INDUSTRIAL OPERATION

UNIT INFORMATION:

Model Code Designation (Quantity)	(1)MIN02
Model Designation per Bulletin	MZP-8702
Heat Exchanger Coating	plain
Plate Material	1100 Aluminum
Plate Thickness, inches	0.008
Plate Spacing,inchesSupply / Exhaust	0.222 / 0.222
Plate Surface Area, sq. feet	748

SUPPLY AIR SIDE:

Air Inlet Temperature, T1, °F (DB / WB)	-21.0 / -21.0
Air Outlet Temperature, T2, °F (DB / WB)	34.7 / 21.9
Air Flow at Entry Point T1, CFM	1,822.1
Air Flow at Exit Point T2, CFM	2,053.4
Air Flow, SCFM	1,634.0
Humidity Ratio, lbm.H2O/lb.Dry Air	0.0003
Pressure Drop, inches of water column	0.68

EXHAUST AIR SIDE:

Air Inlet Temperature, T3, °F (DB / WB)	70.0 / 45.0
Air Outlet Temperature, T4, °F (DB / WB)	16.2 / 16.2
Dew Point Temperature at T3, °F	19.9
Air Flow at Entry Point T3, CFM	2,199.8
Air Flow at Exit Point T4, CFM	1,975.5
Air Flow through, SCFM	1,634.0
Humidity Ratio at T3, lbm.H2O/lb.Dry Air	0.0029
Humidity Ratio at T4, lbm.H2O/lb.Dry Air	0.0026
Pressure Drop, inches of water column	0.74

THERMAL PERFORMANCE

Water Condensed from Cooled Air, lbs/hour	1.9
Thermal Transfer Effectiveness, %	61.2
Heat Transferred, Q, btu's/hour	95,893

The output data from this program are derived from laboratory tests on heat exchangers. These tests were conducted in accordance with ASHRAE Standard 84-78, "Method of Testing Air-To-Air Heat Exchangers."

MINI-Z-PACK - 8702

A:	176 in
B:	52 in
C:	64 in
Est Weight:	4900 lbs

Munters

Des Champs Products

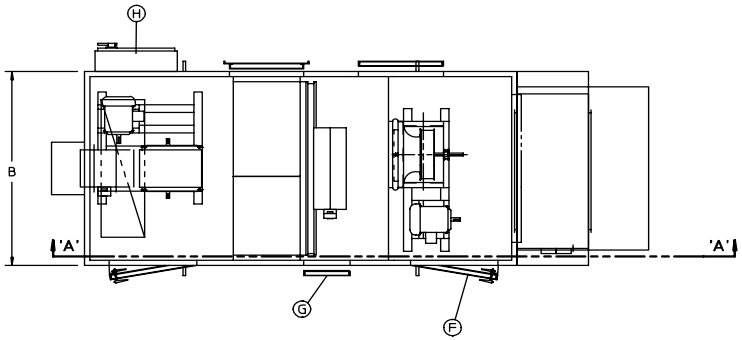

PLAN VIEW

SECTION 'B-B'

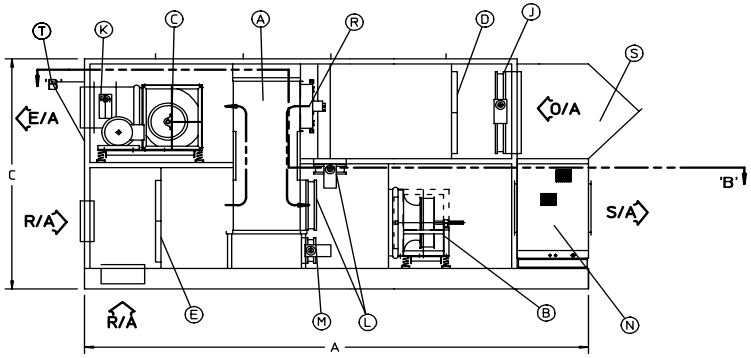

SECTION 'A-A'

A. DCT Heat Exchanger
B. S/A Fan w/ Motor & Drives
C. E/A Fan w/ Motor & Drives
D. S/A Filters - 30% Pleated
E. R/A Filters - 30% Pleated
F. Unit Access Door
G. Unit Bolt-On Panel
H. Unit Electrical Panel
J. O/A Damper (Optional)
K. E/A Damper (Optional)
L. Face and Bypass Dampers (Optional)
M. Recirc Damper (Optional)
N. Indirect Gas Furnace

R. Traversing Defrost (Optional)
S. O/A Hood w/ Birdscreen (Optional)
T. E/A Hood w/ Birdscreen (Optional)

Notes:

1. Minimum 3'-0" clearance required for service access. Coils may required more access for removal.
2. Weather Hoods may be shipped in pieces for assembly and installation by others.
3. Attenuation of fan sound power levels, if required, is by others.

Airflow Key:

O/A:	Outdoor Air
S/A:	Supply Air
R/A:	Return Air
E/A:	Exhaust Air

Job Name: 0

This drawing is intended for preliminary design purposes only. The recipient of the drawing is cautioned against using the drawing for final engineering purposes, as dimensions and weights indicated herein are subject to change during the formal submittal process.

Des Champs Laboratories Inc
ZDUCT Thermodynamic Performance

Box 220, Natural Bridge Station, VA 24579
Phone: (540) 291-1111 Fax: (540) 291-2211

4/29/2009 6:40:43 PM Ver. 4.2.25
Marketing@Entrodyne.com

Order Name	Granby School	Location	-
Order Number	0	Prepared By	kd
(Qty) Model	(1)MIN10	Unit Tag	-
Representative	Trane	Engineering Firm	Honeywell Building Solutions
Altitude	8000		

WINTER HVAC OR INDUSTRIAL OPERATION

UNIT INFORMATION:

Model Code Designation (Quantity)	(1)MIN10
Model Designation per Bulletin	MZP-8710
Heat Exchanger Coating	plain
Plate Material	1100 Aluminum
Plate Thickness, inches	0.008
Plate Spacing,inchesSupply / Exhaust	0.318 / 0.318
Plate Surface Area, sq. feet	3,497

SUPPLY AIR SIDE:

Air Inlet Temperature, T1, °F (DB / WB)	-21.0 / -21.0
Air Outlet Temperature, T2, °F (DB / WB)	45.8 / 28.2
Air Flow at Entry Point T1, CFM	7,454.7
Air Flow at Exit Point T2, CFM	8,588.5
Air Flow, SCFM	6,685.0
Humidity Ratio, lbm.H2O/lb.Dry Air	0.0003
Pressure Drop, inches of water column	0.80

EXHAUST AIR SIDE:

Air Inlet Temperature, T3, °F (DB / WB)	70.0 / 45.0
Air Outlet Temperature, T4, °F (DB / WB)	15.1 / 15.1
Dew Point Temperature at T3, °F	19.9
Air Flow at Entry Point T3, CFM	10,499.7
Air Flow at Exit Point T4, CFM	9,407.2
Air Flow through, SCFM	7,799.0
Humidity Ratio at T3, lbm.H2O/lb.Dry Air	0.0029
Humidity Ratio at T4, lbm.H2O/lb.Dry Air	0.0025
Pressure Drop, inches of water column	1.13

THERMAL PERFORMANCE

Water Condensed from Cooled Air, lbs/hour	13.1
Thermal Transfer Effectiveness, %	73.4
Heat Transferred, Q, btu's/hour	470,400

The output data from this program are derived from laboratory tests on heat exchangers. These tests were conducted in accordance with ASHRAE Standard 84-78, "Method of Testing Air-To-Air Heat Exchangers."

MINI-Z-PACK - 8710

A:	208 in
B:	118 in
C:	90 in
Est Weight:	11600 lbs

Munters

Des Champs Products

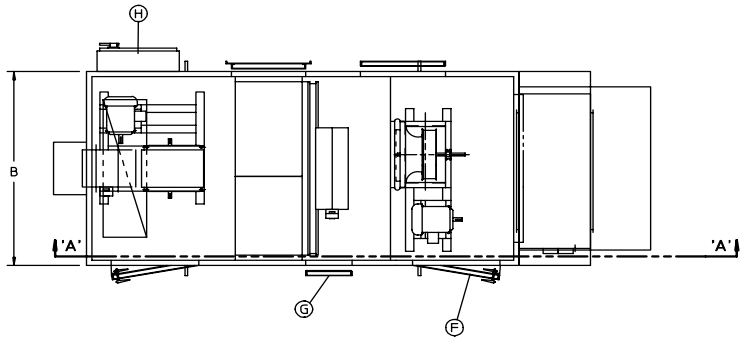

PLAN VIEW

SECTION 'B-B'

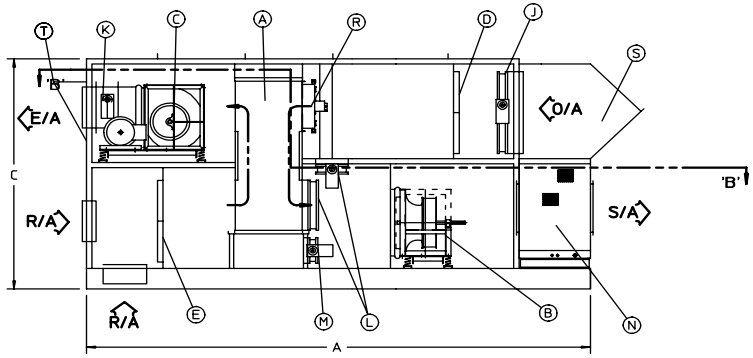

SECTION 'A-A'

A. DCT Heat Exchanger
B. S/A Fan w/ Motor & Drives
C. E/A Fan w/ Motor & Drives
D. S/A Filters - 30% Pleated
E. R/A Filters - 30% Pleated
F. Unit Access Door
G. Unit Bolt-On Panel
H. Unit Electrical Panel
J. O/A Damper (Optional)
K. E/A Damper (Optional)
L. Face and Bypass Dampers (Optional)
M. Recirc Damper (Optional)
N. Indirect Gas Furnace

R. Traversing Defrost (Optional)
S. O/A Hood w/ Birdscreen (Optional)
T. E/A Hood w/ Birdscreen (Optional)

Notes:

1. Minimum 3'-0" clearance required for service access. Coils may required more access for removal.
2. Weather Hoods may be shipped in pieces for assembly and installation by others.
3. Attenuation of fan sound power levels, if required, is by others.

Airflow Key:

O/A:	Outdoor Air
S/A:	Supply Air
R/A:	Return Air
E/A:	Exhaust Air

Job Name: 0

This drawing is intended for preliminary design purposes only. The recipient of the drawing is cautioned against using the drawing for final engineering purposes, as dimensions and weights indicated herein are subject to change during the formal submittal process.

© 2005 Lennox Industries Inc.
Dallas, Texas, USA

INSTALLATION INSTRUCTIONS

G51MP SERIES UNITS

GAS UNITS
505,065M
07/07
Supersedes 07/2005

Technical Publications
Litho U.S.A.

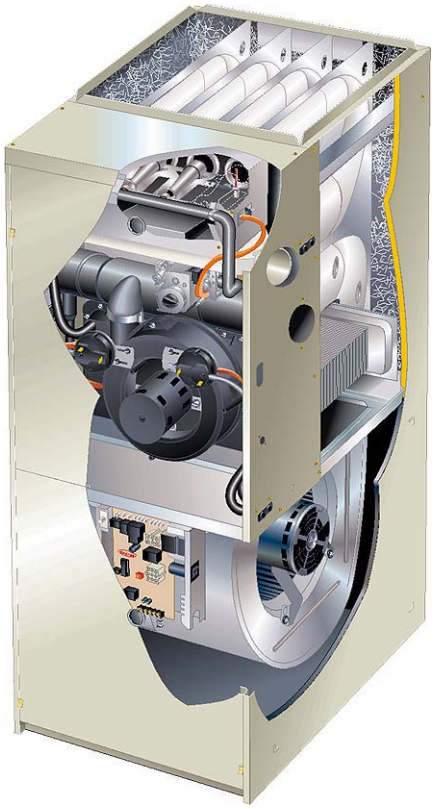

RETAIN THESE INSTRUCTIONS FOR FUTURE REFERENCE

Table of Contents

Unit Dimensions 2
G51MP Parts Identification 3
Shipping and Packing List 4
Safety Information 4
General 6
Combustion, Dilution & Ventilation Air 6
Installation - Setting Equipment 8
Filters 16
Duct System 16
Pipe & Fittings Specifications 16
Vent Piping Guidelines 18
Joint Cementing Procedure 19
Venting Practices 19
Gas Piping 30
Electrical 33
Unit Start-Up 37
Gas Pressure Adjustment 38
High Altitude Information 39
Other Unit Adjustments 40
Service 41
Repair Parts List 43
Ignition Control Board Diagnostic Codes 43
Troubleshooting 44
Vent Pipe Sizing Worksheet 48
Start-Up & Performance Check List 48

⚠ WARNING

FIRE OR EXPLOSION HAZARD.

Failure to follow safety warnings exactly could result in serious injury, death, or property damage.

Do not store or use gasoline or other flammable vapors and liquids in the vicinity of this or any other appliance.

Installation and service must be performed by a qualified installer, service agency or the gas supplier.

WHAT TO DO IF YOU SMELL GAS:

- **Do not try to light any appliance.**
- **Do not touch any electrical switch; do not use any phone in your building.**
- **Leave the building immediately.**
- **Immediately call your gas supplier from a neighbor's phone. Follow the gas supplier's instructions.**
- **If you cannot reach your gas supplier, call the fire department.**

G51MP Unit Dimensions - inches (mm)

***NOTE - 60C and 60D size units installed in upflow applications that require air volumes over 1800 cfm (850 L/s) must have one of the following:**

1. **Single side return air with transition, to accommodate 20 x 25 x 1 in. (508 x 635 x 25 mm) air filter. Required to maintain proper air velocity.**
2. **Single side return air with optional RAB Return Air Base**
3. **Bottom return air.**
4. **Return air from both sides.**
5. **Bottom and one side return air.**

Refer to Engineering Handbook for additional information.

****Consider sizing requirements for optional IAQ equipment before cutting side return opening.**

[1] Optional External Side Return Air Filter Kit is not for use with the optional RAB Return Air Base.

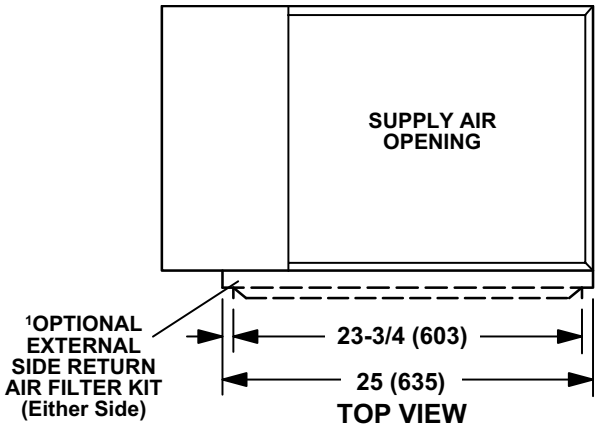

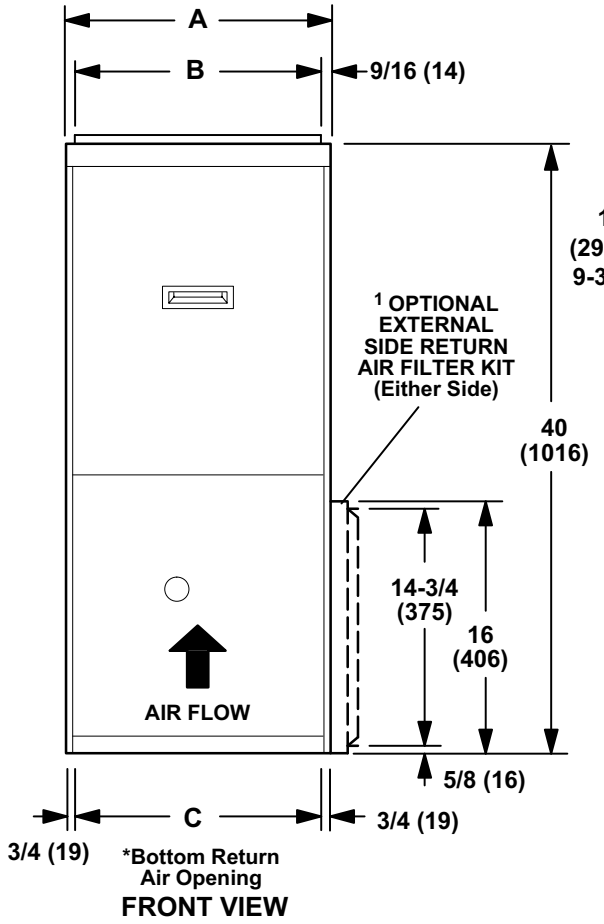

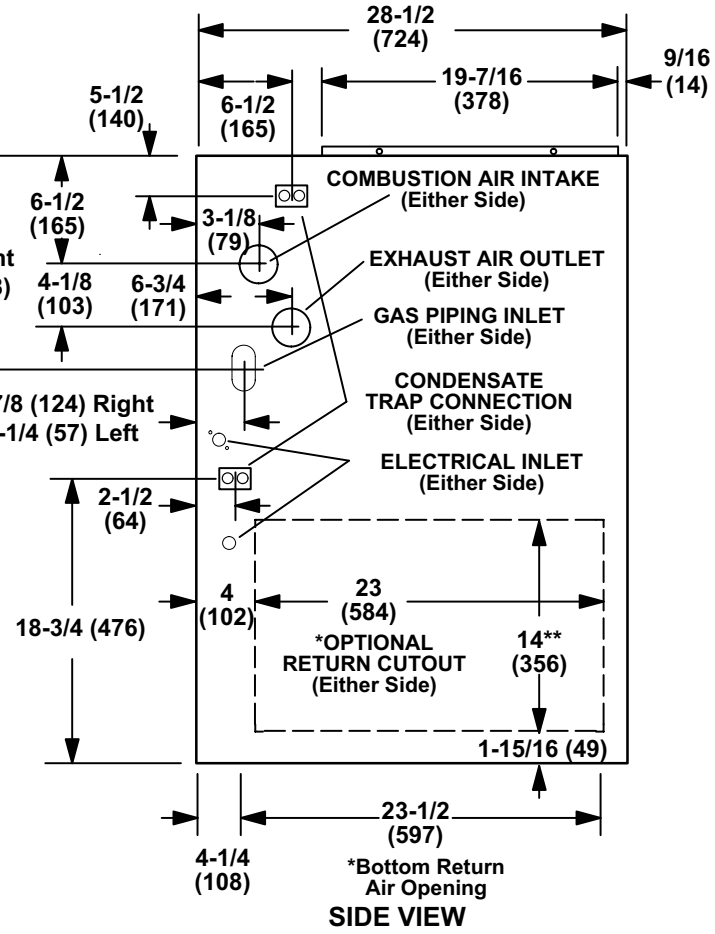

Model No.	A		B		C	
	in.	mm	in.	mm	in.	mm
G51MP-24B-045 G51MP-36B-045 G51MP-36B-070	17-1/2	446	16-3/8	416	16	406
G51MP-36C-090 G51MP-48C-090 G51MP-60C-090 G51MP-48C-110 G51MP-60C-110	21	533	19-7/8	454	19-1/2	495
G51MP-60D-135	24-1/2	622	23-3/8	546	23	584

G51MP Parts Arrangement

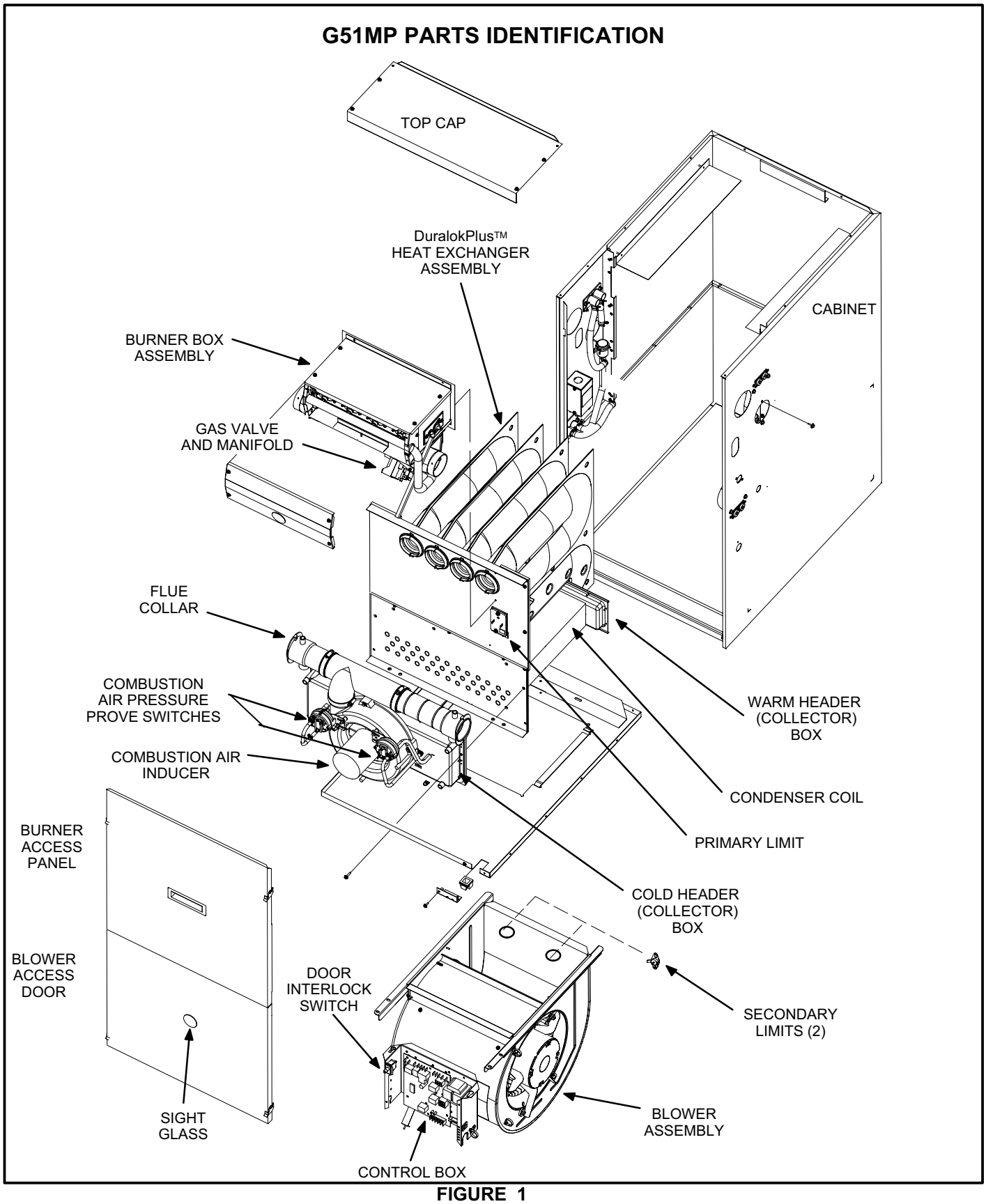

FIGURE 1

G51MP Gas Furnace

The G51MP gas furnace is shipped ready for installation in the upflow, downflow, horizontal left air discharge or horizontal right air discharge position. The furnace is shipped with the bottom panel in place. The bottom panel must be removed if the unit is to be installed in upflow applications with bottom return air. The bottom panel must also be removed and discarded in all downflow or horizontal applications.

The furnace is equipped for installation in natural gas applications. A conversion kit (ordered separately) is required for use in propane/LP gas applications.

The G51MP can be installed as either a Direct Vent or a Non-Direct Vent gas central furnace.

NOTE - In Direct Vent installations, combustion air is taken from outdoors and flue gases are discharged outdoors. In Non-Direct Vent installations, combustion air is taken from indoors and flue gases are discharged outdoors. See figure 2 for applications involving roof termination.

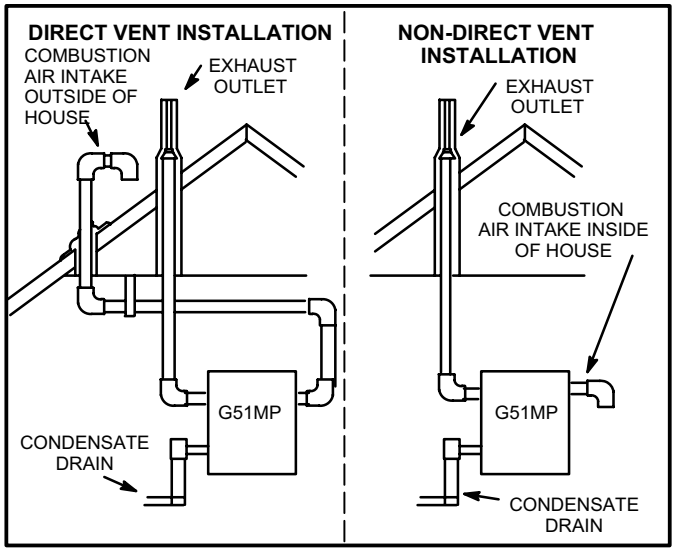

FIGURE 2

Shipping and Packing List

Package 1 of 1 contains

1 - Assembled G51MP unit

1 - Bag assembly containing the following:

- 3 - Screws
- 3 - Wire nuts
- 1 - Snap bushing
- 1 - Snap plug
- 1 - Wire tie
- 1 - Condensate trap
- 1 - Condensate trap cap
- 2 - 2” diameter vent / intake plugs
- 1 - 3” diameter cabinet plug (intake)
- 1 - 2” diameter debris screen

NOTE - G51MP-48C-110 and G51MP-60C-110 units also include a 2” diameter ABS street elbow, which is shipped on the blower deck in the heating compartment. G51MP-60D-135 units are shipped with a 3” to 2” ABS reducing elbow.

The following items may also be ordered separately:

1 - Thermostat

1 - Propane/LP changeover kit

Check equipment for shipping damage. If you find any damage, immediately contact the last carrier.

Safety Information

⚠WARNING

Improper installation, adjustment, alteration, service or maintenance can cause property damage, personal injury or loss of life. Installation and service must be performed by a qualified installer, service agency or the gas supplier.

⚠CAUTION

As with any mechanical equipment, personal injury can result from contact with sharp sheet metal edges. Be careful when you handle this equipment.

Use only the type of gas approved for use with this furnace. Refer to unit nameplate.

G51MP units are CSA International certified to ANSI Z21.47 and CSA 2.3 standards.

In the USA, installation of gas furnaces must conform with local building codes. In the absence of local codes, units must be installed according to the current National Fuel Gas Code (ANSI-Z223.1/NFPA 54). The National Fuel Gas Code is available from the following address:

American National Standards Institute, Inc.
11 West 42nd Street
New York, NY 10036

In Canada, installation must conform with current National Standard of Canada CSA-B149 Natural Gas and Propane Installation Codes, local plumbing or waste water codes and other applicable local codes.

In order to ensure proper unit operation in non-direct vent applications, combustion and ventilation air supply must be provided according to the current National Fuel Gas Code or CSA-B149 standard.

This furnace is CSA International certified for installation clearances to combustible material as listed on the unit nameplate and in the tables in figures 7, 12 and 16. Accessibility and service clearances must take precedence over fire protection clearances.

NOTE - For installation on combustible floors, the furnace shall not be installed directly on carpeting, tile, or other combustible material other than wood flooring.

For installation in a residential garage, the furnace must be installed so that the burner(s) and the ignition source are located no less than 18 inches (457 mm) above the floor. The furnace must be located or protected to avoid physical damage by vehicles. When a furnace is installed in a public garage, hangar, or other building that has a hazardous atmosphere, the furnace must be installed according to recommended good practice requirements and current National Fuel Gas Code or CSA B149 standards.

NOTE - Furnace must be adjusted to obtain a temperature rise within the range specified on the unit nameplate. Failure to do so may cause erratic limit operation and premature heat exchanger failure.

This G51MP furnace may be used as a high-static unit heater. The G51MP may also be installed in an aircraft hangar in accordance with the Standard for Aircraft Hangars (ANSI/NFPA No. 408-1990).

Installation in parking structures must be in accordance with the Standard for Parking Structures (ANSI/NFPA No. 88A-1991). Installation in repair garages must be in accordance with the Standard for Repair Garages (ANSI/NFPA No. 88B-1991).

This G51MP furnace must be installed so that its electrical components are protected from water.

When this furnace is used with cooling units, it shall be installed in parallel with, or on the upstream side of, cooling units to avoid condensation in the heating compartment. With a parallel flow arrangement, a damper (or other means to control the flow of air) must adequately prevent chilled air from entering the furnace. If the damper is manually operated, it must be equipped to prevent operation of either the heating or the cooling unit, unless it is in the full **HEAT** or **COOL** setting.

When installed, this furnace must be electrically grounded according to local codes. In addition, in the United States, installation must conform with the current National Electric Code, ANSI/NFPA No. 70. The National Electric Code (ANSI/NFPA No. 70) is available from the following address:

National Fire Protection Association
1 Battery March Park
Quincy, MA 02269

In Canada, all electrical wiring and grounding for the unit must be installed according to the current regulations of the Canadian Electrical Code Part I (CSA Standard C22.1) and/or local codes.

NOTE - This furnace is designed for a minimum continuous return air temperature of 60°F (16°C) or an intermittent operation down to 55°F (13°C) dry bulb for cases where a night setback thermostat is used. Return air temperature must not exceed 85°F (29°C) dry bulb.

The G51MP furnace may be installed in alcoves, closets, attics, basements, garages, and utility rooms.

This furnace design has not been CSA certified for installation in mobile homes, recreational vehicles, or outdoors.

Never use an open flame to test for gas leaks. Check all connections using a commercially available soap solution made specifically for leak detection.

Lennox does not recommend the use of G51MP units as a construction heater during any phase of construction. Very low return air temperatures, harmful vapors and operation of the unit with clogged or misplaced filters will damage the unit.

G51MP units may be used for heating of buildings or structures under construction, if the following conditions are met:

- *The vent system must be permanently installed per these installation instructions.*
- *A room thermostat must control the furnace. The use of fixed jumpers that will provide continuous heating is not allowed.*
- *The return air duct must be provided and sealed to the furnace.*
- *Return air temperature range between 60°F (16°C) and 80°F (27°C) must be maintained.*
- *Air filters must be installed in the system and must be maintained during construction.*
- *Air filters must be replaced upon construction completion.*
- *The input rate and temperature rise must be set per the furnace rating plate.*
- *One hundred percent (100%) outdoor air must be provided for combustion air requirements during construction. Temporary ducting may supply outdoor air to the furnace. Do not connect duct directly to the furnace. Size the temporary duct following these instructions in section for Combustion, Dilution and Ventilation Air in a confined space with air from outside.*
- *The furnace heat exchanger, components, duct system, air filters and evaporator coils must be thoroughly cleaned following final construction clean-up.*
- *All furnace operating conditions (including ignition, input rate, temperature rise and venting) must be verified according to these installation instructions.*

NOTE - The Commonwealth of Massachusetts stipulates these additional requirements:

- ***Gas furnaces shall be installed by a licensed plumber or gas fitter only.***
- ***The gas cock must be "T handle" type.***
- ***When a furnace is installed in an attic, the passageway to and service area surrounding the equipment shall be floored.***

General

These instructions are intended as a general guide and do not supersede local codes in any way. Consult authorities having jurisdiction before installation.

In addition to the requirements outlined previously, the following general recommendations must be considered when installing a G51MP furnace:

- Place the furnace as close to the center of the air distribution system as possible. The furnace should also be located close to the chimney or vent termination point.
- When the furnace is installed in non-direct vent applications, do not install the furnace where drafts might blow directly into it. This could cause improper combustion and unsafe operation.
- When the furnace is installed in non-direct vent applications, do not block the furnace combustion air opening with clothing, boxes, doors, etc. Air is needed for proper combustion and safe unit operation.
- When the furnace is installed in an attic or other insulated space, keep insulation away from the furnace.
- When the furnace is installed in an unconditioned space, consider provisions required to prevent freezing of condensate drain system.

⚠ CAUTION

G51MP unit should not be installed in areas normally subject to freezing temperatures.

⚠ WARNING

Product contains fiberglass wool.

Disturbing the insulation in this product during installation, maintenance, or repair will expose you to fiberglass wool. Breathing this may cause lung cancer. (Fiberglass wool is known to the State of California to cause cancer.)

Fiberglass wool may also cause respiratory, skin, and eye irritation.

To reduce exposure to this substance or for further information, consult material safety data sheets available from address shown below, or contact your supervisor.

Lennox Industries Inc.
P.O. Box 799900
Dallas, TX 75379-9900

Combustion, Dilution & Ventilation Air

If the G51MP is installed as a Non-Direct Vent Furnace, follow the guidelines in this section.

NOTE - In Non-Direct Vent installations, combustion air is taken from indoors and flue gases are discharged outdoors.

⚠ WARNING

Insufficient combustion air can cause headaches, nausea, dizziness or asphyxiation. It will also cause excess water in the heat exchanger resulting in rusting and premature heat exchanger failure. Excessive exposure to contaminated combustion air will result in safety and performance related problems. Avoid exposure to the following substances in the combustion air supply:

Permanent wave solutions
Chlorinated waxes and cleaners
Chlorine base swimming pool chemicals
Water softening chemicals
De-icing salts or chemicals
Carbon tetrachloride
Halogen type refrigerants
Cleaning solvents (such as perchloroethylene)
Printing inks, paint removers, varnishes, etc.
Hydrochloric acid
Cements and glues
Antistatic fabric softeners for clothes dryers
Masonry acid washing materials

In the past, there was no problem in bringing in sufficient outdoor air for combustion. Infiltration provided all the air that was needed. In today's homes, tight construction practices make it necessary to bring in air from outside for combustion. Take into account that exhaust fans, appliance vents, chimneys, and fireplaces force additional air that could be used for combustion out of the house. Unless outside air is brought into the house for combustion, negative pressure (outside pressure is greater than inside pressure) will build to the point that a downdraft can occur in the furnace vent pipe or chimney. As a result, combustion gases enter the living space creating a po-tentially dangerous situation.

In the absence of local codes concerning air for combustion and ventilation, use the guidelines and procedures in this section to install G51MP furnaces to ensure efficient and safe operation. You must consider combustion air needs and requirements for exhaust vents and gas piping. A portion of this information has been reprinted with permission from the National Fuel Gas Code (ANSI-

Z223.1/NFPA 54). This reprinted material is not the complete and official position of the ANSI on the referenced subject, which is represented only by the standard in its entirety.

In Canada, refer to the CSA B149 installation codes.

⚠ CAUTION

Do not install the furnace in a corrosive or contaminated atmosphere. Meet all combustion and ventilation air requirements, as well as all local codes.

All gas-fired appliances require air for the combustion process. If sufficient combustion air is not available, the furnace or other appliance will operate inefficiently and unsafely. Enough air must be provided to meet the needs of all fuel-burning appliances and appliances such as exhaust fans which force air out of the house. When fireplaces, exhaust fans, or clothes dryers are used at the same time as the furnace, much more air is required to ensure proper combustion and to prevent a downdraft. Insufficient air causes incomplete combustion which can result in carbon monoxide.

In addition to providing combustion air, fresh outdoor air dilutes contaminants in the indoor air. These contaminants may include bleaches, adhesives, detergents, solvents and other contaminants which can corrode furnace components.

The requirements for providing air for combustion and ventilation depend largely on whether the furnace is installed in an unconfined or a confined space.

Unconfined Space

An unconfined space is an area such as a basement or large equipment room with a volume greater than 50 cubic feet (1.42 m^3) per 1,000 Btu (.29 kW) per hour of the combined input rating of all appliances installed in that space. This space also includes adjacent rooms which are not separated by a door. Though an area may appear to be unconfined, it might be necessary to bring in outdoor air for combustion if the structure does not provide enough air by infiltration. If the furnace is located in a building of tight construction with weather stripping and caulking around the windows and doors, follow the procedures in the air from outside section.

Confined Space

A confined space is an area with a volume less than 50 cubic feet (1.42 m^3) per 1,000 Btu (.29 kW) per hour of the com-bined input rating of all appliances installed in that space. This definition includes furnace closets or small equipment rooms.

When the furnace is installed so that supply ducts carry air circulated by the furnace to areas outside the space containing the furnace, the return air ***must be*** handled by ducts which are sealed to the furnace casing and which terminate outside the space containing the furnace. This is especially important when the furnace is mounted on a platform in a confined space such as a closet or small equipment room. Even a small leak around the base of the unit at the platform or at the return air duct connection can cause a potentially dangerous negative pressure condition. Air for combustion and ventilation can be brought into the confined space either from inside the building or from outside.

Air from Inside

If the confined space that houses the furnace adjoins a space categorized as unconfined, air can be brought in by providing two permanent openings between the two spaces. Each opening must have a minimum free area of 1 square inch (645 mm^2) per 1,000 Btu (.29 kW) per hour of total input rating of all gas-fired equipment in the confined space. Each opening must be at least 100 square inches (64516 mm^2). One opening shall be within 12 inches (305 mm) of the top of the enclosure and one opening within 12 inches (305 mm) of the bottom. See figure 3.

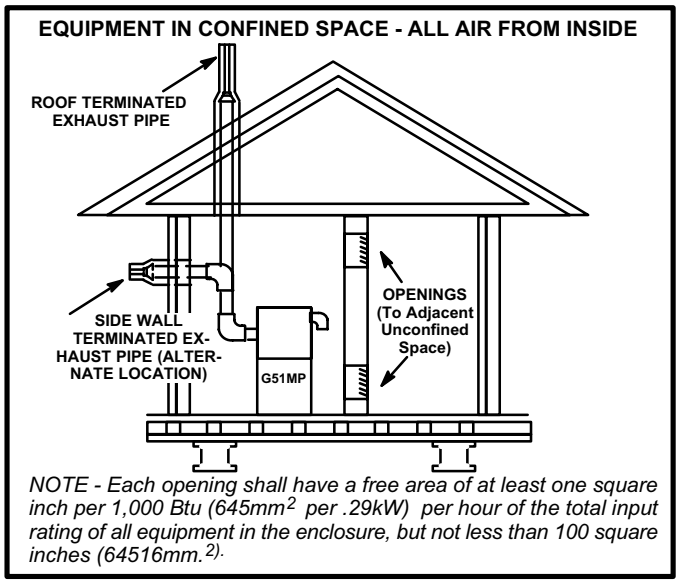

FIGURE 3

Air from Outside

If air from outside is brought in for combustion and ventilation, the confined space shall be provided with two permanent openings. One opening shall be within 12” (305mm) of the top of the enclosure and one within 12” (305mm) of the bottom. These openings must communicate directly or by ducts with the outdoors or spaces (crawl or attic) that freely communicate with the outdoors or indirectly through vertical ducts. Each opening shall have a minimum free area of 1 square inch per 4,000 Btu (645mm^2 per 1.17kW) per hour of total input rating of all equipment in the enclosure. When communicating with the outdoors through horizontal ducts,

each opening shall have a minimum free area of 1 square inch per 2,000 Btu (645mm^2 per .59kW) per total input rating of all equipment in the enclosure (See figure 4).

EQUIPMENT IN CONFINED SPACE - ALL AIR FROM OUTSIDE
(Inlet Air from Crawl Space and Outlet Air to Ventilated Attic)

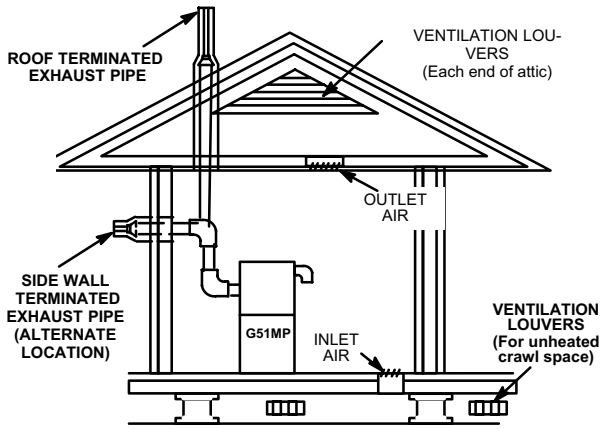

NOTE-The inlet and outlet air openings shall each have a free area of at least one square inch per 4,000 Btu (645mm^2 per 1.17kW) per hour of the total input rating of all equipment in the enclosure.

FIGURE 4

If air from outside is brought in for combustion and ventilation, the confined space must have two permanent openings. One opening shall be within 12 inches (305 mm) of the top of the enclosure and one opening within 12 inches (305 mm) of the bottom. These openings must communicate directly or by ducts with the outdoors or spaces (crawl or attic) that freely communicate with the outdoors or indirectly through vertical ducts. Each opening shall have a minimum free area of 1 square inch (645 mm^2) per 4,000 Btu (1.17 kW) per hour of total input rating of all equipment in the enclosure. See figures 4 and 5. When communicating with the outdoors through horizontal ducts, each opening shall have a minimum free area of 1 square inch (645 mm^2) per 2,000 Btu (.56 kW) per total input rating of all equipment in the enclosure. See figure 6.

When ducts are used, they shall be of the same cross-sectional area as the free area of the openings to which they connect. The minimum dimension of rectangular air ducts shall be no less than 3 inches (75 mm). In calculating free area, the blocking effect of louvers, grilles, or screens must be considered. If the design and free area of protective covering is not known for calculating the size opening required, it may be assumed that wood louvers will have 20 to 25 percent free area and metal louvers and grilles will have 60 to 75 percent free area. Louvers and grilles must be fixed in the open position or interlocked with the equipment so that they are opened automatically during equipment operation.

EQUIPMENT IN CONFINED SPACE - ALL AIR FROM OUTSIDE
(All Air Through Ventilated Attic)

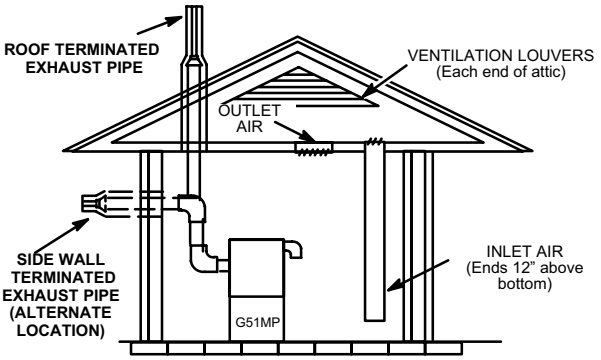

NOTE-The inlet and outlet air openings shall each have a free area of at least one square inch per 4,000 Btu (645mm^2 per 1.17kW) per hour of the total input rating of all equipment in the enclosure.

FIGURE 5

EQUIPMENT IN CONFINED SPACE - ALL AIR FROM OUTSIDE

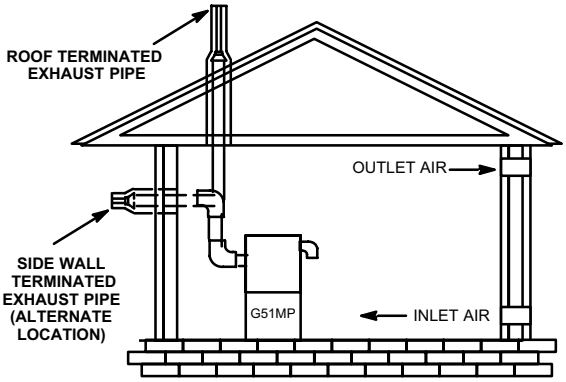

NOTE-Each air duct opening shall have a free area of at least one square inch per 2,000 Btu (645mm^2 per .59kW) per hour of the total input rating of all equipment in the enclosure. If the equipment room is located against an outside wall and the air openings communicate directly with the outdoors, each opening shall have a free area of at least 1 square inch per 4,000 Btu (645mm^2 per 1.17kW) per hour of the total input rating of all other equipment in the enclosure.

FIGURE 6

Installation - Setting Equipment

⚠WARNING

Do not install the furnace on its front or its back. Do not connect the return air ducts to the back of the furnace. Doing so will adversely affect the operation of the safety control devices, which could result in personal injury or death.

Select a location that allows for the required clearances that are listed on the unit nameplate. Also consider gas supply connections, electrical supply, vent connection, condensate trap and drain connections, and installation and service clearances [24 inches (610 mm) at unit front]. *The unit must be level from front to back and side to side.*

NOTE - 1/3 hp blower motors are equipped with four flexible mounting legs, and 1/2 hp blower motors are equipped with three flexible legs and one rigid leg. The rigid leg is equipped with a shipping bolt and a flat white plastic washer (rather than the rubber mounting grommet used with a flexible mounting leg). ***The bolt and washer must be removed before the furnace is placed into operation.*** *After the bolt and washer have been removed, the rigid leg will not touch the blower housing.*

Allow for clearances to combustible materials as indicated on the unit nameplate. Minimum clearances for closet or alcove installations are shown in figures 7, 12 and 16.

⚠ WARNING

Blower access panel must be securely in place when blower and burners are operating. Gas fumes, which could contain carbon monoxide, can be drawn into living space resulting in personal injury or death.

⚠ WARNING

Improper installation of the furnace can result in personal injury or death. Combustion and flue products must never be allowed to enter the return air system or air in the living space. Use sheet metal screws and joint tape to seal return air system to furnace.
In platform installations with furnace return, the furnace should be sealed airtight to the return air plenum. A door must never be used as a portion of the return air duct system. The base must provide a stable support and an airtight seal to the furnace. Allow absolutely no sagging, cracks, gaps, etc.
For no reason should return and supply air duct systems ever be connected to or from other heating devices such as a fireplace or stove, etc. Fire, explosion, carbon monoxide poisoning, personal injury and/or property damage could result.

Upflow Applications

The G51MP gas furnace can be installed as shipped in the upflow position. Refer to figure 7 for clearances.

Installation Clearances

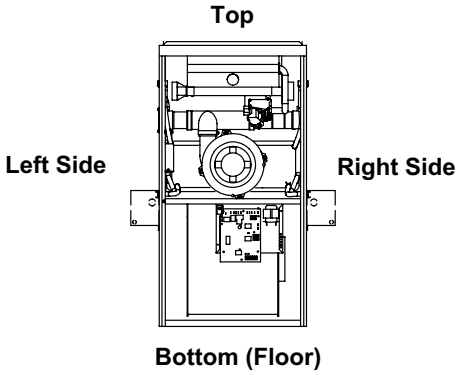

Top/Plenum	1 in. (25 mm)
*Front	0
Back	0
Sides	0†
Vent	0
Floor	0‡

***Front clearance in alcove installation must be 24 in. (610 mm). Maintain a minimum of 24 in. (610 mm) for front service access.**
†Allow proper clearances to accommodate condensate trap and vent pipe installation.
‡For installations on a combustible floor, do not install the furnace directly on carpeting, tile or other combustible materials other than wood flooring.

FIGURE 7

Return Air -- Upflow Units

Return air can be brought in through the bottom or either side of the furnace installed in an upflow application. If the furnace is installed on a platform with bottom return, make an airtight seal between the bottom of the furnace and the platform to ensure that the furnace operates properly and safely. The furnace is equipped with a removable bottom panel to facilitate installation.

Markings are provided on both sides of the furnace cabinet for installations that require side return air. Cut the furnace cabinet at the maximum dimensions shown on page 2.

NOTE - When air volumes over 1800 cfm (850 L/s) are required with 60C or 60D models in an upflow application, the following return air options are available:

1. ***Return air from single side with transition which will accommodate 20 x 25 x 1 in. (508 x 635 x 25 mm) air filter. (Required to maintain proper air velocity.) See figure 8.***
2. ***Return air from single side with optional RAB Return Air Base. See figure 10.***
3. ***Return air from bottom.***
4. ***Return air from both sides.***
5. ***Return air from bottom <u>and</u> one side.***

Refer to Engineering Handbook for additional information.

G51MP applications which include side return air and a condensate trap installed on the same side of the cabinet require either a return air base or field-fabricated transition to accommodate an optional IAQ accessory taller than 14.2".

Side Return Air
(with transition and filter)

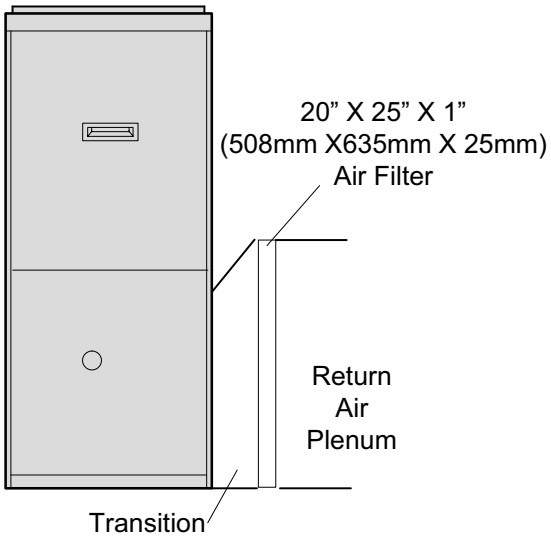

FIGURE 8

Removing the Bottom Panel

Remove the two screws that secure the bottom cap to the furnace. Pivot the bottom cap down to release the bottom panel. Once the bottom panel has been removed, reinstall the bottom cap. See figure 9.

Removing the Bottom Panel

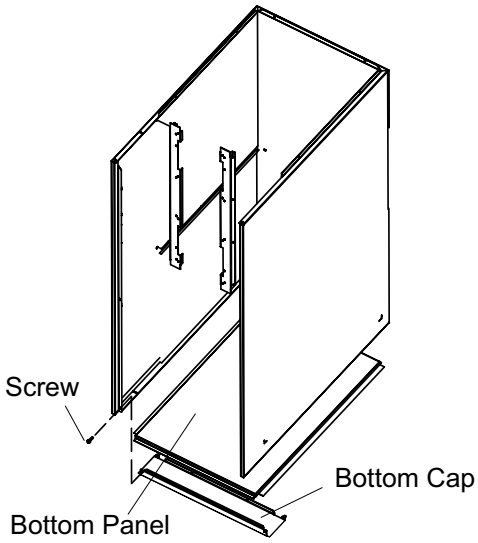

FIGURE 9

Optional Return Air Base

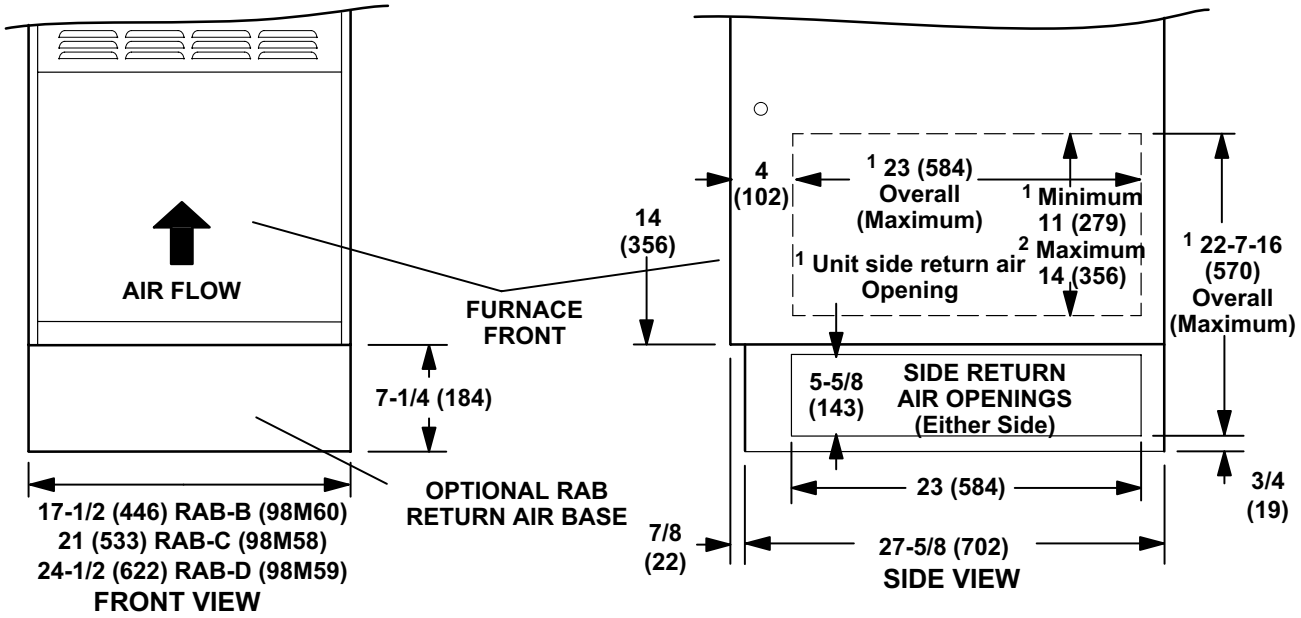

NOTE- Optional Side Return Air Filter Kits are not for use with RAB Return Air Base.

[1] Both the unit return air opening and the base return air opening must be covered by a single plenum or IAQ cabinet. Minimum unit side return air opening dimensions for units requiring 1800 cfm or more of air (W x H): 23 x 11 in. (584 x 279 mm).

The opening can be cut as needed to accommodate plenum or IAQ cabinet while maintaining dimensions shown. Side return air openings must be cut in the field. There are cutting guides stenciled on the cabinet for the side return air opening. The size of the opening must not extend beyond the markings on the furnace cabinet..

[2] To minimize pressure drop, the largest opening height possible (up to 14 inches) is preferred.

NOTE- Optional Side Return Air Filter Kits are not for use with RAB Return Air Base.

FIGURE 10

Leveling an Upflow Unit

When the side return air inlets are used in an upflow application, it may be necessary to install leveling bolts on the bottom of the furnace. Use field-supplied corrosion-resistant 5/16 inch machine bolts (4) and nuts (8). See figure 11.

NOTE - The maximum length of the bolt is 1-1/2 inches.

1 - Lie the furnace on its back and drill a 5/16 inch diameter hole in each corner of the furnace's bottom. See figure 11 for the correct location of the holes. Drill through the bottom panel and the bottom flange of the cabinet.
2 - Install one bolt and two nuts into each hole. Screw the first nut onto a bolt and then insert the bolt into a hole. A flat washer may be added between the nut and the bottom of the unit.
3 - Screw another nut onto the bolt on the inside of the furnace base. A flat washer may be added between the nut and the bottom of the unit.
4 - Adjust the outside nut to the appropriate height and tighten the inside nut to secure the arrangement.

NOTE - The unit may be tilted back-to-front a maximum of 1". This will ensure proper draining of the heat exchanger.

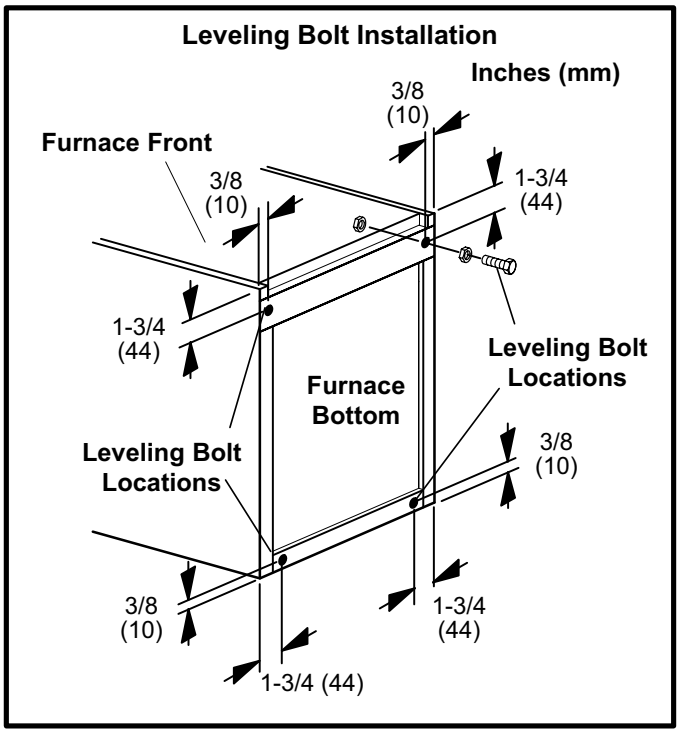

FIGURE 11

Downflow Applications

The unit may be installed three ways in downflow applications: on non-combustible flooring, on combustible flooring using an additive base, or on a reverse-flow cooling cabinet. **Do not drag the unit across the floor in the downflow position. Flange damage will result.**

Refer to figure 12 for clearances in downflow applications.

Downflow Application Installation Clearances

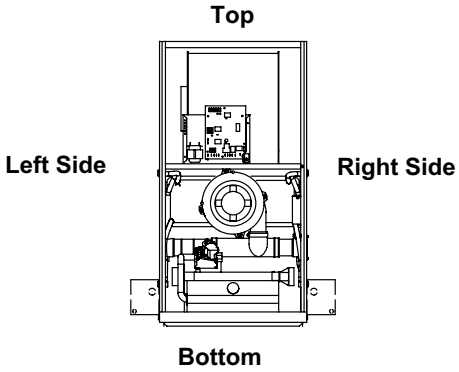

Top	0
*Front	0
Back	0
Sides	0†
Vent	0
Floor	NC‡

***Front clearance in alcove installation must be 24 in. (610 mm). Maintain a minimum of 24 in. (610 mm) for front service access.**
†Allow proper clearances to accommodate condensate trap and vent pipe installation.
‡The furnace may be installed on a combustible wood floor if an optional additive base is installed between the furnace and the combustible floor.

FIGURE 12

Installation on Non-Combustible Flooring

1 - Cut floor opening keeping in mind clearances listed on unit rating plate. Also keep in mind gas supply connections, electrical supply, flue and air intake connections and sufficient installation and servicing clearances. See table 1 for correct floor opening size.
2 - Flange warm air plenum and lower the plenum into the opening.
3 - Set the unit over the plenum and seal the plenum to the unit.
3 - Ensure that the seal is adequate.

TABLE 1
NON-COMBUSTIBLE FLOOR OPENING SIZE

Model No.	Front to Rear		Side to Side	
	in.	mm	in.	mm
B Cabinet (17.5")	19 - 3/4	502	16 - 5/8	422
C Cabinet (21")	19 - 3/4	502	20-1/8	511
D Cabinet (24.5")	19 - 3/4	502	23 - 5/8	600

NOTE - Floor opening dimensions listed are 1/4 inch (6 mm) larger than the unit opening. See dimension drawing on page 2.

Installation on Combustible Flooring

1 - When unit is installed on a combustible floor, an additive base must be installed between the furnace and the floor. The base must be ordered separately for the following cabinet sizes:
   - B cabinet 17.5” - # 11M60
   - C cabinet 21” - # 11M61
   - D cabinet 24.5” - # 11M62

   See table 2 for opening size to cut in floor.

⚠ CAUTION

The furnace and additive base shall not be installed directly on carpeting, tile, or other combustible material other than wood flooring.

TABLE 2
ADDITIVE BASE FLOOR OPENING SIZE

Model	Front to Rear		Side to Side	
	in.	mm	in.	mm
B Cabinet (17.5”)	22	559	18 - 3/4	476
C Cabinet (21”)	22	559	22 - 3/4	578
D Cabinet (24.5”)	22	559	25 - 3/4	654

2 - After opening is cut, set additive base into opening.

3 - Check fiberglass strips on additive base to make sure they are properly glued and positioned.

4 - Lower supply air plenum into additive base until plenum flanges seal against fiberglass strips.

NOTE - Be careful not to damage fiberglass strips. Check for a tight seal.

5 - Set the furnace over the plenum.

6 - Ensure that the seal between the furnace and plenum is adequate.

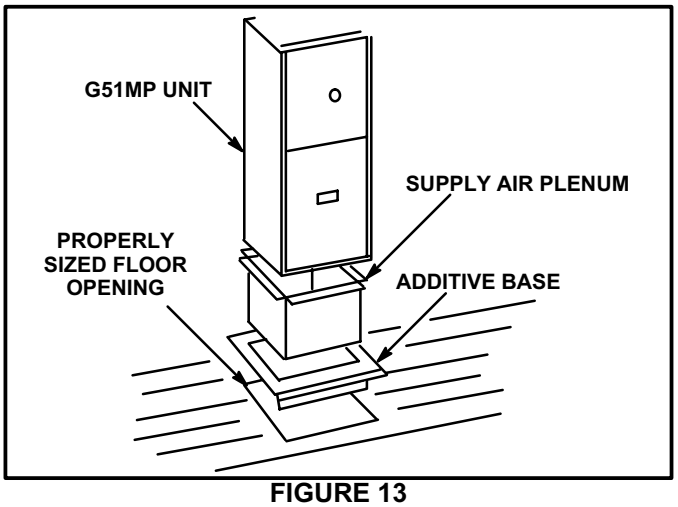

FIGURE 13

Installation on Cooling Cabinet

1 - Refer to reverse-flow coil installation instructions for correctly sized opening in floor and installation of cabinet.

2 - When cooling cabinet is in place, set and secure the furnace according to the instructions that are provided with the cooling coil. Secure the furnace to the cabinet.

3 - Seal the cabinet and check for air leaks.

Return Air Opening -- Downflow Units

The following steps should be taken when installing plenum:

1 - Bottom edge of plenum should be flanged with a hemmed edge (See figure 14 or 15).

2 - Sealing strips should be used to ensure an airtight seal between the cabinet and the plenum.

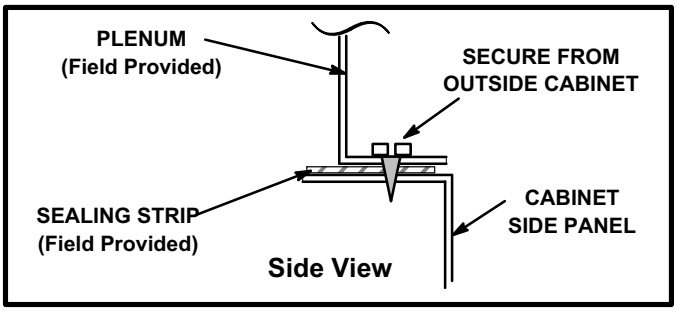

FIGURE 14

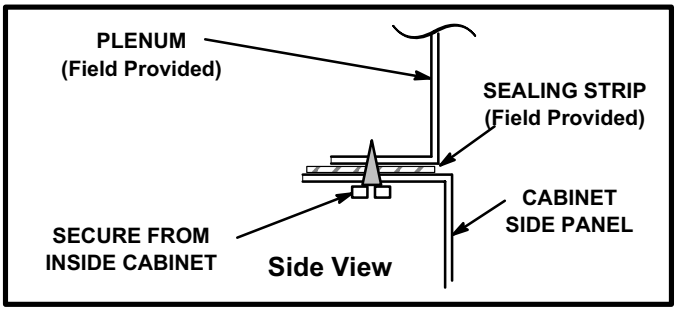

FIGURE 15

3 - In all cases, plenum should be secured to top of furnace using sheet metal screws.

4 - Make certain that an adequate seal is made.

Horizontal Applications

The G51MP furnace can be installed in horizontal applications with either right- or left-hand air discharge.

Refer to figure 16 for clearances in horizontal applications.

Horizontal Application Installation Clearances

Right-Hand Discharge

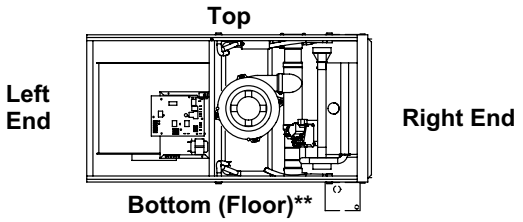

Left-Hand Discharge

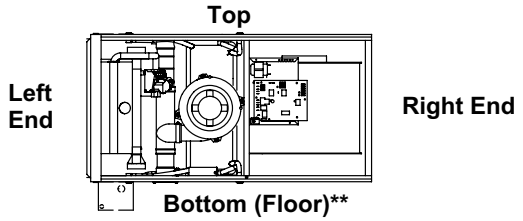

Top	0
Front*	0
Back	0
Ends	0
Vent	0
Floor	0‡

***Front clearance in alcove installation must be 24 in. (610 mm). Maintain a minimum of 24 in. (610 mm) for front service access.**
****A 5-1/2" service clearance must be maintained below the unit to provide for servicing of the condensate trap.**
‡For installations on a combustible floor, do not install the furnace directly on carpeting, tile or other combustible materials other than wood flooring.

FIGURE 16

This furnace may be installed in either an attic or a crawlspace. The G51MP may also be installed as a unit heater. Either suspend the furnace from roof rafters or floor joists, as shown in figure 17, or install the furnace on a platform, as shown in figure 18. The unit must be supported at both ends and beneath the blower deck to prevent sagging.

*NOTE - **In horizontal applications, the unit must be level side to side.** The unit may be tilted back to front a maximum of 1". This will ensure proper draining of the heat exchanger.*

Installation of Horizontal Furnace Suspended in Attic

NOTE - If unit is suspended in attic or crawl space, horizontal support kit (Cat No 56J18 ordered separately) must be used to ensure proper unit support and coil drainage.

1 - Select location for unit keeping in mind service and other necessary clearances. See figure 16.

2 - Provide service platform in front of unit.

3 - Fabricate a drain pan fitted with a 1/2 inch or 3/4 inch N.P.T. fitting.

4 - Using 3/8 inch rods and support frame kit (ordered separately), fabricate suspension hangers for unit keeping in mind front service access clearances.

5 - Mount unit on support frame as shown in figure 17. Unit must be level to ensure proper coil drainage.

6 - Continue with exhaust, condensate and intake line piping instructions.

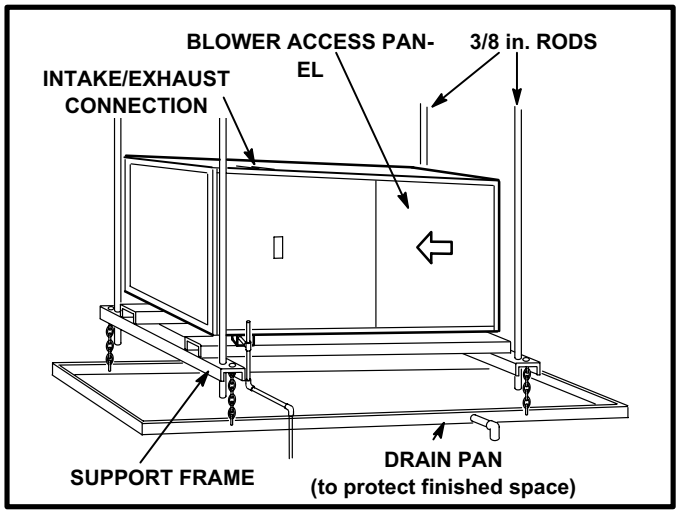

FIGURE 17

7 - Hang drain pan below support frame as shown in figure 17. Leave 5-1/2 inches for service clearance below unit for condensate trap.

8 - Route auxiliary drain line so that water draining from this outlet will be easily noticed by the homeowner.

Platform Installation of Horizontal Unit in Attic

1 - Select location for unit keeping in mind service and other necessary clearances. See figure 16.

2 - Construct a raised wooden frame and cover frame with a plywood sheet. Provide a service platform and drain pan for unit.

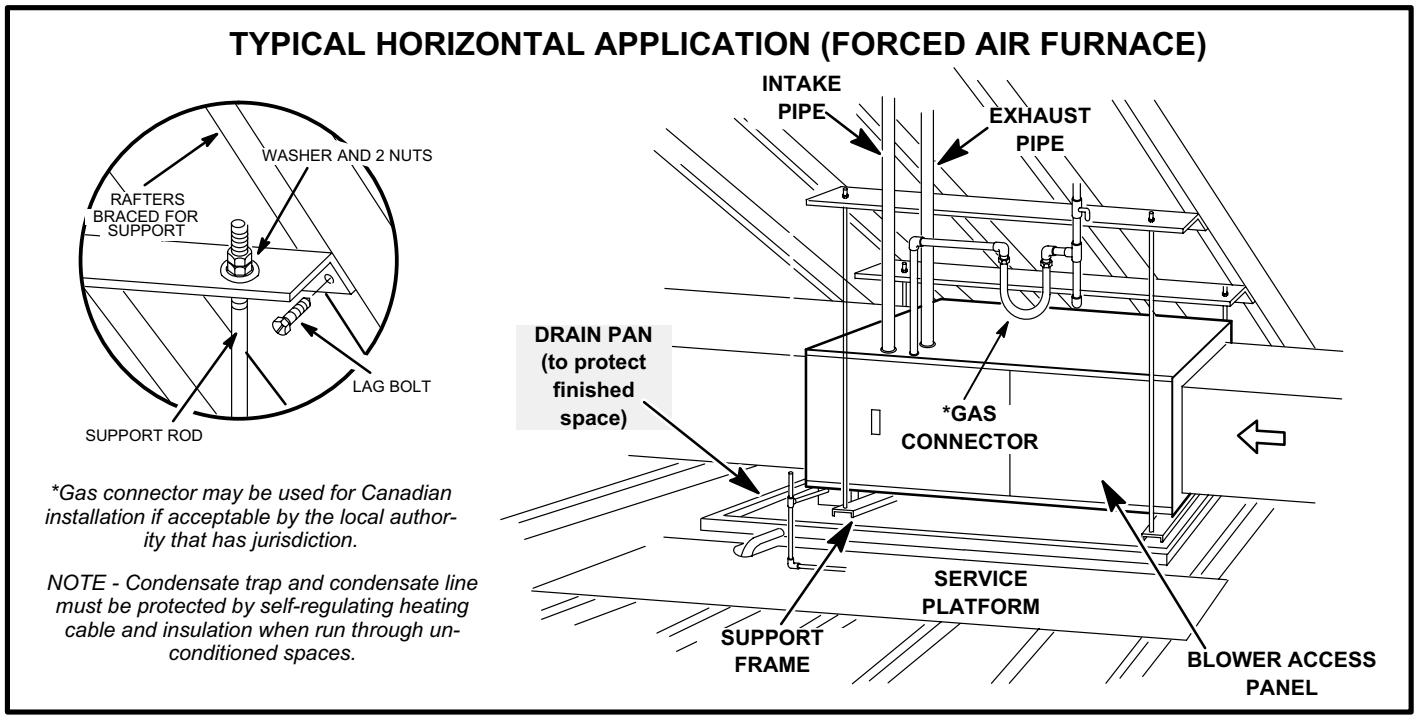

FIGURE 18

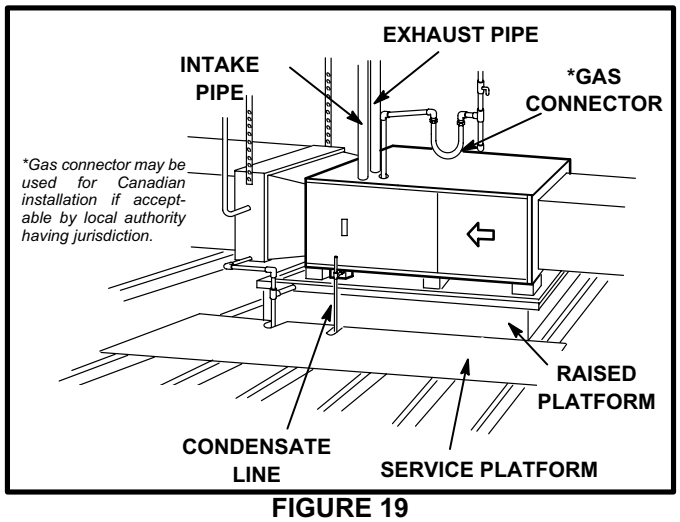

FIGURE 19

3 - Route auxiliary drain line so that water draining from this outlet will be easily noticed by the homeowner.

4 - Set unit in drain pan as shown in figure 19. Unit must be level to ensure proper coil drainage. Leave 5-1/2 inches for service clearance below unit for condensate trap.

5 - Continue with exhaust, condensate and intake piping installation according to instructions.

Installation of Horizontal Unit Suspended in Crawl Space

NOTE - If unit is suspended in attic or crawl space, support frame kit (Cat No 56J18 ordered separately) must be used to ensure proper unit support and coil drainage.

1 - Select location for unit keeping in mind service and other clearances. See figure 16.

2 - Using 3/8 inch rods and support frame kit, fabricate suspension hangers keeping in mind service access panel clearances.

3 - Install unit on support frame as shown in figure 20. Unit must be level to ensure proper coil drainage. Leave 5-1/2 inches for service clearance below unit for condensate trap.

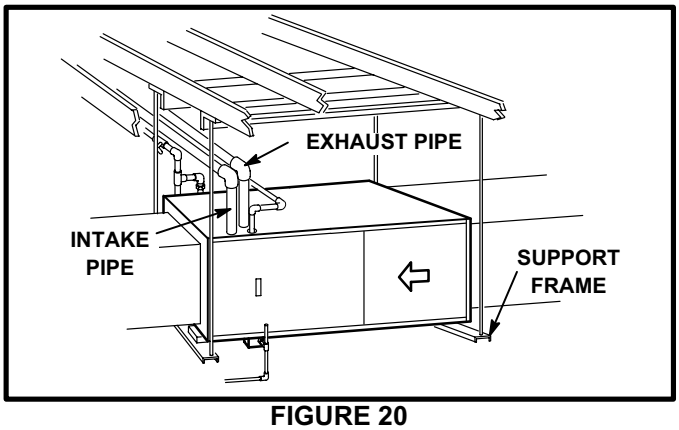

FIGURE 20

4 - Install exhaust and intake piping according to instructions given in following section. Condensate line should be run into condensate pump if necessary to meet drain line slope requirements.

Platform Installation of Horizontal Unit in Crawl Space

1 - Select location for unit, keeping in mind service and other clearances.

2 - After positioning cement blocks, mount support frame kit *(Cat No 56J18 ordered separately)* on top of blocks and install unit on frame. Unit must be level to ensure proper heat exchanger coil drainage. Leave 5-1/2 inches for service clearance) for condensate trap.

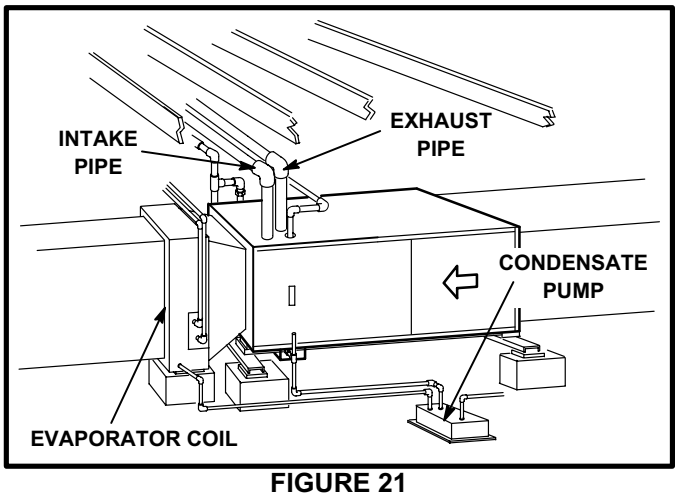

FIGURE 21

3 - Install exhaust and intake piping according to information given in following section. Condensate line should be run into condensate pump as shown in figure 21.

G51MP Installed in Unit Heater Applications

Horizontal unit heaters may be installed either suspended from the ceiling using the support frame kit or mounted on a field-fabricated platform. The condensate trap must be installed where it can be serviced at a later date.

Unit Heater Discharge Duct Guidelines

A field-fabricated and installed discharge air duct and grille cabinet is suitable for use with the G51MP heater. See figure 22. Keep the following items in mind when constructing the cabinet.

1 - Outer dimensions of cabinet should match those of the unit heater, so the duct/grille cabinet installs flush with the unit heater cabinet. See figure 22.

2 - Flange both ends of duct/grille cabinet so that screws can be used to secure cabinet to discharge end of unit heater.

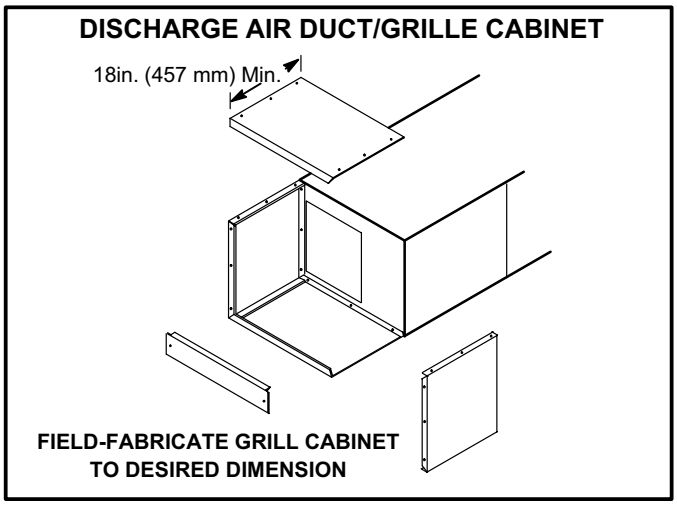

FIGURE 22

3 - To ensure proper operation, the duct/grille cabinet must be at least 18 inches long.

4 - Use #10-16 x 1/2 inch sheet metal screws to secure duct/grille cabinet to unit, taking care not to damage internal components of unit heater when drilling holes or installing screws. See figure 23.

5 - Use adjustable, double-deflection grille(s) to distribute discharge air. Adjust static pressure to be in the 0.06 inch to 0.10 inch w.c. range.

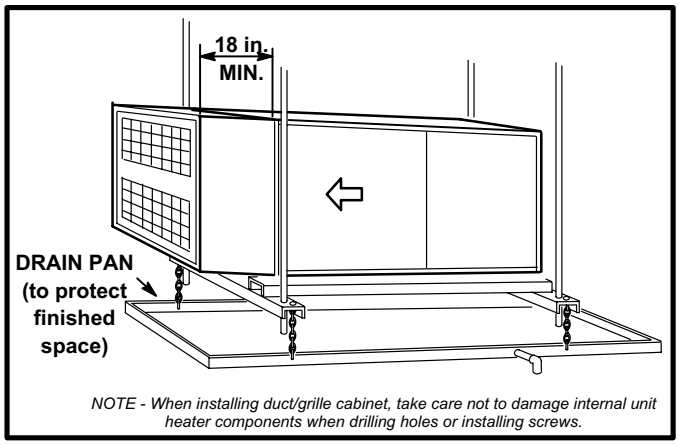

FIGURE 23

Installation of Horizontal Unit Heater Suspended from Ceiling

1 - Select location for unit keeping in mind service and other clearances.

2 - Fabricate a drain pan fitted with 1/2 inch (13 mm) or 3/4 inch (19 mm) N.P.T. fitting.

3 - Using 3/8 inch (9 mm) rods and support frame kit (ordered separately), fabricate suspension hangers, keeping in mind service access panel clearances.

4 - Hang drain pan below support frame as shown in figure 23. Route auxiliary drain line so that water draining from this outlet will be easily noticed by the homeowner.

5 - Mount unit on support frame as shown in figure 23. Unit must be level to ensure proper coil drainage. Leave 5-1/2 inches for service clearance below unit for condensate trap.

6 - Continue with exhaust, condensate and intake line piping instructions.

Platform Installation of Horizontal Unit Heater

1 - Select location for unit keeping in mind service and other necessary clearances.

2 - Construct a raised wooden frame and cover frame with a plywood sheet. Provide service platform and drain pan for unit. Route auxiliary drain line so that water draining from this outlet will be easily noticed by the homeowner.

3 - Set unit in drain pan as shown in figure 24. Unit must be level to ensure proper coil drainage. Leave 5-1/2 inches for service clearance below unit for condensate trap.

4 - Continue with exhaust, condensate and intake piping installation according to instructions which follow.

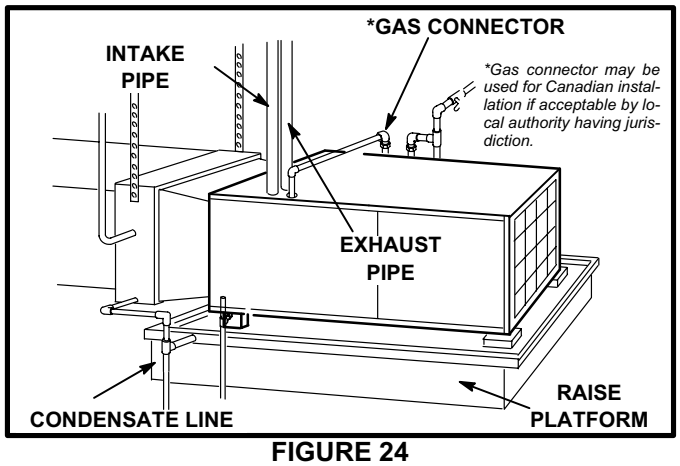

FIGURE 24

Return Air -- Horizontal Applications

Return air can be brought in through the end of a furnace installed in a horizontal application. The furnace is equipped with a removable bottom panel to facilitate installation. See figure 9.

Filters

This unit is not equipped with a filter or rack. A field-provided filter is required for the unit to operate properly. Table 3 lists recommended filter sizes.

A filter must be in place whenever the unit is operating.

TABLE 3

Furnace Cabinet Size	Filter Size	
	Side Return	Bottom Return
17-1/2”	16 X 25 X 1 (1)	16 X 25 X 1 (1)
21”	16 X 25 X 1 (1)	20 X 25 X 1 (1)
24-1/2”	16 X 25 X 1 (2)	24 X 25 X 1 (1)

Duct System

Use industry-approved standards to size and install the supply and return air duct system. This will result in a quiet and low-static system that has uniform air distribution.

NOTE - Operation of this furnace in heating mode (indoor blower operating at selected heating speed) with an external static pressure which exceeds 0.5 inches w.c. may result in erratic limit operation.

Supply Air Plenum

If the furnace is installed without a cooling coil, a removable access panel should be installed in the supply air duct. The access panel should be large enough to permit inspection (by reflected light) of the heat exchanger for leaks after the furnace is installed. The furnace access panel must always be in place when the furnace is operating and it must not allow leaks into the supply air duct system.

Return Air Plenum

Return air must not be drawn from a room where this furnace, or any other gas appliance (ie., a water heater), is installed. When return air is drawn from a room, a negative pressure is created in the room. If a gas appliance is operating in a room with negative pressure, the flue products can be pulled back down the vent pipe and into the room. This reverse flow of the flue gas may result in incomplete combustion and the formation of carbon monoxide gas. This toxic gas might then be distributed throughout the house by the furnace duct system.

Return air can be brought in through the bottom or either side of the furnace. If a furnace with bottom return air is installed on a platform, make an airtight seal between the bottom of the furnace and the platform to ensure that the unit operates properly and safely. Use fiberglass sealing strips, caulking, or equivalent sealing method between the plenum and the furnace cabinet to ensure a tight seal. If a filter is installed, size the return air duct to fit the filter frame.

Pipe & Fittings Specifications

All pipe, fittings, primer and solvent cement must conform with American National Standard Institute and the American Society for Testing and Materials (ANSI/ASTM) standards. The solvent shall be free flowing and contain no lumps, undissolved particles or any foreign matter that adversely affects the joint strength or chemical resistance of the cement. The cement shall show no gelation, stratification, or separation that cannot be removed by stirring. Refer to the table 4 below for approved piping and fitting materials.

TABLE 4
PIPING AND FITTINGS SPECIFICATIONS

PIPE & FITTING MATERIAL	ASTM SPECIFICATION
Schedule 40 PVC (Pipe)	D1785
Schedule 40 PVC (Cellular Core Pipe)	F891
Schedule 40 PVC (Fittings)	D2466
SDR-21PVC (Pipe)	D2241
SDR-26 PVC (Pipe)	D2241
Schedule 40 ABS Cellular Core DWV (Pipe)	F628
Schedule 40 ABS (Pipe)	D1527
Schedule 40 ABS (Fittings)	D2468
ABS-DWV (Drain Waste & Vent) (Pipe & Fittings)	D2661
PVC-DWV (Drain Waste & Vent) Pipe & Fittings)	D2665

⚠ CAUTION

Solvent cements for plastic pipe are flammable liquids and should be kept away from all sources of ignition. Do not use excessive amounts of solvent cement when making joints. Good ventilation should be maintained to reduce fire hazard and to minimize breathing of solvent vapors. Avoid contact of cement with skin and eyes.

Primers and solvents must meet ASTM specifications. PVC primer is specified in ASTM F 656. Use PVC solvent cement as specified in ASTM D 2564 and ABS solvent cement as specified in ASTM D 2235. Low temperature solvent cement is recommended. Metal or plastic strapping may be used for vent pipe hangers.

When making ABS joints, pieces can be prepared with a cleaner. When joining ABS to PVC materials, use PVC solvent cement. Refer to the procedure specified in ASTM D3138.

Canadian Applications Only - Pipe, fittings, primer and solvent cement used to vent this appliance must be certified to ULC S636 and supplied by a single manufacturer as part of an approved venting system. When bonding the vent system to the furnace, use ULC S636 approved One-Step Transition Cement to bond the pipe to the flue collar, 90° elbow or reducing 90° elbow as applicable. In addition, the first three feet of vent pipe from the furnace flue collar must be accessible for inspection.

Table 5 lists the available exhaust termination kits, as well as vent pipe equivalencies which must be used when sizing vent pipe. All Lennox vent terminations are PVC or ABS.

TABLE 5
OUTDOOR TERMINATION KITS AND CORRESPONDING EQUIVALENCIES

UNIT MODEL	VENT PIPE DIA. (in.)	Vent Pipe Length Equivalency (feet)								
		Outdoor Exhaust Accelerator (Dia. X Length)	Outdoor Exhaust Accelerator (Dia. X Length)	1-1/2" Concentric Kit	2" Concentric Kit	3" Concentric Kit	2" Wall Plate Kit	3" Wall Plate Kit	2" Wall Kit with Vent Extension	2" Wall Ring Kit
		1-1/2" X 12"	2" X 12"	71M80	69M29	60L46	22G44 30G28	44J40 81J20	30G79	15F74
24B-045 36B-045	2	4	Not Allowed	12	Not Allowed	Not Allowed	4	4*	4	4
	2-1/2	5	Not Allowed	15	Not Allowed	Not Allowed	5	5*	5	5
	3	7	Not Allowed	21	Not Allowed	Not Allowed	7	7*	7	7
	4	14	Not Allowed	42	Not Allowed	Not Allowed	14	14*	14	14
36B-070	2	4	Not Allowed	12	Not Allowed	Not Allowed	4	4*	4	4
	2-1/2	5	Not Allowed	15	Not Allowed	Not Allowed	5	5*	5	5
	3	8	Not Allowed	24	Not Allowed	Not Allowed	8	8*	8	8
	4	14	Not Allowed	42	Not Allowed	Not Allowed	14	14*	14	14
36C-090 48C-090 60C-090	2	Not Allowed	1	Not Allowed	3	3	Not Allowed	1	Not Allowed	1**
	2-1/2	Not Allowed	2	Not Allowed	6	6	Not Allowed	2	Not Allowed	2**
	3	Not Allowed	2	Not Allowed	6	6	Not Allowed	2	Not Allowed	2**
	4	Not Allowed	4	Not Allowed	12	12	Not Allowed	4	Not Allowed	4**
48C-110 60C-110	2	Not Allowed	1	Not Allowed	3	3	Not Allowed	1	Not Allowed	1**
	2-1/2	Not Allowed	2	Not Allowed	6	6	Not Allowed	2	Not Allowed	2***
	3	Not Allowed	2	Not Allowed	6	6	Not Allowed	2	Not Allowed	2***
	4	Not Allowed	4	Not Allowed	12	12	Not Allowed	4	Not Allowed	4***
60D-135	3	Not Allowed	6	Not Allowed	Not Allowed	15	Not Allowed	6	Not Allowed	6***
	4	Not Allowed	10	Not Allowed	Not Allowed	25	Not Allowed	10	Not Allowed	10***

**Requires field-provided and installed 1-1/2" exhaust accelerator.*
***Requires field-provided and installed 2" exhaust accelerator.*
****For use only in non-direct vent applications, when snow riser is not required. Requires field-provided and installed 2" exhaust accelerator.*

Vent Piping Guidelines

The G51MP can be installed as either a Non-Direct Vent or a Direct Vent gas central furnace.

NOTE - In Non-Direct Vent installations, combustion air is taken from indoors and flue gases are discharged outdoors. In Direct Vent installations, combustion air is taken from outdoors and flue gases are discharged outdoors.

Intake and exhaust pipe sizing in Direct Vent applications and exhaust pipe sizing in Non-Direct Vent applications -- Size pipe according to tables 6 and 7. Table 6 lists the *minimum* equivalent vent pipe lengths permitted. Table 7 lists the *maximum* equivalent pipe lengths permitted.

Maximum vent length is defined as:

Total length (linear feet) of pipe,
Plus Equivalent length (feet) of fittings,
Plus Equivalent length (feet) of termination.
NOTE - Include ALL pipe and ALL fittings, both in doors and outdoors.

Regardless of the diameter of pipe used, the standard roof and wall terminations described in section *Exhaust Piping Terminations* should be used. Exhaust vent termination pipe is sized to optimize the velocity of the exhaust gas as it exits the termination. Refer to table 8.

**NOTE - The exhaust pipe should be offset a minimum of 12 inches to avoid the possibility of water droplets being released from the exhaust termination. The minimum exhaust vent length is 15 ft. Shorter exhaust vent lengths may result in the discharge of water droplets from the exhaust termination, in spite of the 12-inch vertical offset. See figure 25.*

Each 90° elbow (including those provided with the furnace) of any diameter is equivalent to 5 feet (1.52m) of vent pipe of the same diameter. Two 45° elbows are equivalent to one 90° elbow of the same diameter. One 45° elbow is equal to 2.5 feet (.76m) of vent pipe of the same diameter.

In some applications which permit the use of several different sizes of vent pipe, a combination vent pipe may be used. Contact Lennox' Application Department for assistance in sizing vent pipe in these applications.

NOTE - The flue collar on all models is sized to accommodate 2" Schedule 40 flue pipe. When vent pipe which is larger than 2" must be used in an upflow application, a 2" elbow must be applied at the flue collar in order to properly transition to the larger diameter flue pipe. This elbow must be added to the elbow count used to determine acceptable vent lengths. Assign an equivalent feet value to this elbow according to the larger size pipe being used. Contact the Application Department for more information concerning sizing of vent systems which include multiple pipe sizes.

Use the following steps to correctly size vent pipe diameter. ***Refer to Vent Pipe Size Determination Worksheet on page 48.***

1 - Determine the vent termination and its corresponding equivalent feet value according to table 5.
2 - Determine the number of 90° elbows required for both indoor and outdoor (e.g. snow riser) use. Calculate the corresponding equivalent feet of vent pipe.
3 - Determine the number of 45° elbows required for both indoor and outdoor use. Calculate the corresponding equivalent feet of vent pipe.
4 - Determine the length of straight pipe required.
5 - Add the total equivalent feet calculated in steps 1 through 4 and compare that length to the maximum values given in table 7 for the proposed vent pipe diameter. If the total equivalent length required exceeds the maximum equivalent length listed in the appropriate table, evaluate the next larger size pipe.

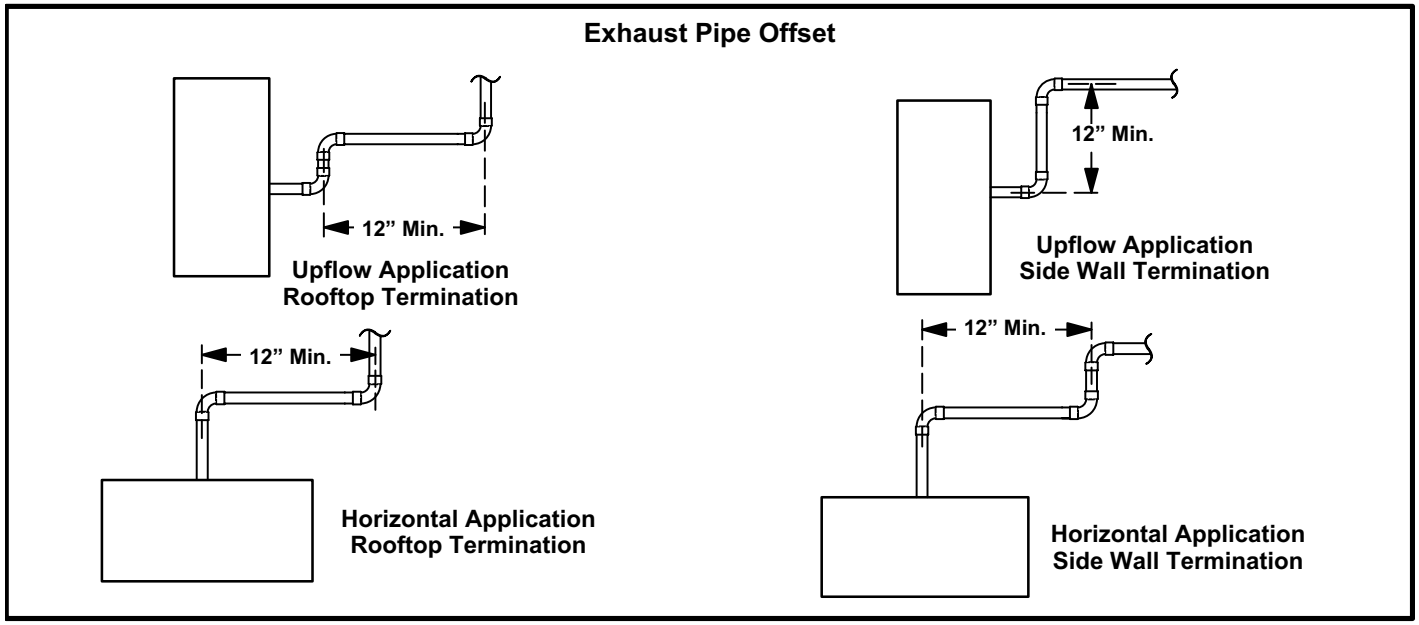

FIGURE 25

⚠ IMPORTANT

Do not use screens or perforated metal in exhaust terminations. Doing so will cause freeze-ups and may block the terminations.

TABLE 6
MINIMUM VENT PIPE LENGTHS

G51MP MODEL	MIN. EQUIV. VENT LENGTH	EXAMPLE
045, 070, 090	15 ft.*	5 ft. plus 2 elbows of 2", 2-1/2", 3" or 4" diameter pipe
110**		5 ft. plus 2 elbows of 2", 2-1/2", 3" or 4" diameter pipe
135***		5 ft. plus 2 elbows of 3" or 4" diameter pipe

**Any approved termination may be added to the minimum equivalent length listed.*

***G51MP-48C-110 and G51MP-60C-110 must have 90° street ell (supplied) installed directly into unit flue collar.*

****G51MP-60D-135 must have 3" to 2" reducing ell (supplied) installed directly into unit flue collar.*

TABLE 7
MAXIMUM VENT PIPE LENGTHS
DIRECT (2 PIPE) AND NON-DIRECT (1 PIPE) APPLICATIONS

ALTITUDE	G51MP MODEL	MAXIMUM EQUIVALENT VENT LENGTH FEET			
		2" dia.	2-1/2" dia.	3" dia.	4" dia.
0 - 2000 (0 - 609 m)	045	110	135	160	250
	070	70	135	160	250
	090	50	100	125	225
	110*	30	70	125	200
	135**	n/a	n/a	***125	180
2001 - 4500 (610 - 1371 m)	045	110	135	160	250
	070	70	135	160	250
	090	50	100	125	225
	110*	20	70	125	200
	135**	n/a	n/a	***90	180
4501-7500 (1372-2286 m)	045	110	135	160	250
	070	70	135	160	250
	090	30	100	125	225
	110*	n/a	70	125	200
	135**	n/a	n/a	***90	180
7501 - 10000 (2287 - 3048 m)	045	110	135	160	250
	070	70	135	160	250
	090	n/a	100	125	225
	110*	n/a	70	125	200
	135**	n/a	n/a	***90	180

n/a -- Not allowed.

**G51MP-48C-110 and G51MP-60C-110 must have 90° street ell (supplied) installed directly into unit flue collar.*

***G51MP-60D-135 must have 3" to 2" reducing ell (supplied) installed directly into unit flue collar.*

****90° elbows used in configuration of G51MP-60D-135 vent, must be limited to 3" sweep elbows.*

Joint Cementing Procedure

All cementing of joints should be done according to the specifications outlined in ASTM D 2855.

⚠ WARNING

DANGER OF EXPLOSION!

Fumes from PVC glue may ignite during system check. Allow fumes to dissipate for at least 5 minutes before placing unit into operation.

1 - Measure and cut vent pipe to desired length.

2 - Debur and chamfer end of pipe, removing any ridges or rough edges. If end is not chamfered, edge of pipe may remove cement from fitting socket and result in a leaking joint.

3 - Clean and dry surfaces to be joined.

4 - Test fit joint and mark depth of fitting on outside of pipe.

5 - Uniformly apply liberal coat of PVC primer for PVC or ABS cleaner for ABS to inside socket surface of fitting and male end of pipe to depth of fitting socket.

6 - Promptly apply solvent cement to end of pipe and inside socket surface of fitting. Cement should be applied lightly but uniformly to inside of socket. Take care to keep excess cement out of socket. Apply second coat to end of pipe.

NOTE - Time is critical at this stage. Do not allow primer to dry before applying cement.

7 - Immediately after applying last coat of cement to pipe, and while both inside socket surface and end of pipe are wet with cement, forcefully insert end of pipe into socket until it bottoms out. Turn PVC pipe 1/4 turn during assembly (but not after pipe is fully inserted) to distribute cement evenly. DO NOT turn ABS or cellular core pipe.

NOTE - Assembly should be completed within 20 seconds after last application of cement. Hammer blows should not be used when inserting pipe.

8 - After assembly, wipe excess cement from pipe at end of fitting socket. A properly made joint will show a bead around its entire perimeter. Any gaps may indicate a defective assembly due to insufficient solvent.

9 - Handle joints carefully until completely set.

Venting Practices

The thickness of construction through which vent pipes may be installed is 24" (610mm) maximum and 3/4" (19mm) minimum. If a G51MP furnace replaces a furnace which was commonly vented with another gas appliance, the size of the existing vent pipe for that gas appliance must be checked. Without the heat of the original furnace flue products, the existing vent pipe is probably oversized for the single water heater or other appliance. The vent should be checked for proper draw with the remaining appliance.

1 - Use recommended piping materials for exhaust piping.

2 - Secure all joints, including drip leg, gas-tight using approved cement.

Suspend piping using hangers at a minimum of every 5 feet (1.52m) for schedule 40 PVC and every 3 feet (.91m) for ABS-DWV, PVC-DWV, SPR-21 PVC, and SDR-26 PVC piping. A suitable hanger can be fabricated by using metal or plastic strapping or a large wire tie.

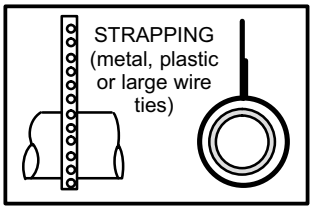

FIGURE 26

3 - In areas where piping penetrates joists or interior walls, hole must be large enough to allow clearance on all sides of pipe through center of hole using a hanger.

4 - Secure piping at the point where it exits the outside wall or roof in order to prevent transmission of vibration to the structure.

5 - When furnace is installed in a residence where unit is shut down for an extended period of time, such as a vacation home, make provisions for draining condensate collection trap and lines.

Exhaust Piping

NOTE - A 2" diameter street ell is located on the blower deck of 48C-110 and 60C-110 units. Street ell ***must be*** *glued with ABS solvent cement directly into the unit flue collar. See figure 27. A 3" to 2" reducing ell is located on the blower deck of the 60D-135 units.* ***In upflow or downflow applications,*** *the reducing ell* ***must be*** *glued with ABS solvent cement directly into the unit flue collar.*

1 - Choose the appropriate side for venting in upflow or downflow positions. Exhaust piping exits from the top of the unit in horizontal air discharge applications. Glue the field-provided exhaust vent pipe (or provided street ell or reducing ell in upflow or downflow applications) to the flue collar. All PVC cement joints should be made according to the specifications outlined in ASTM D 2855. Refer to pipe and fittings specifications and gluing procedures.

TYPICAL EXHAUST PIPE CONNECTIONS AND CONDENSATE TRAP INSTALLATION
IN UPFLOW OR DOWNFLOW DIRECT OR NON-DIRECT VENT APPLICATIONS
(Right-Hand Exit in Upflow Application Shown)

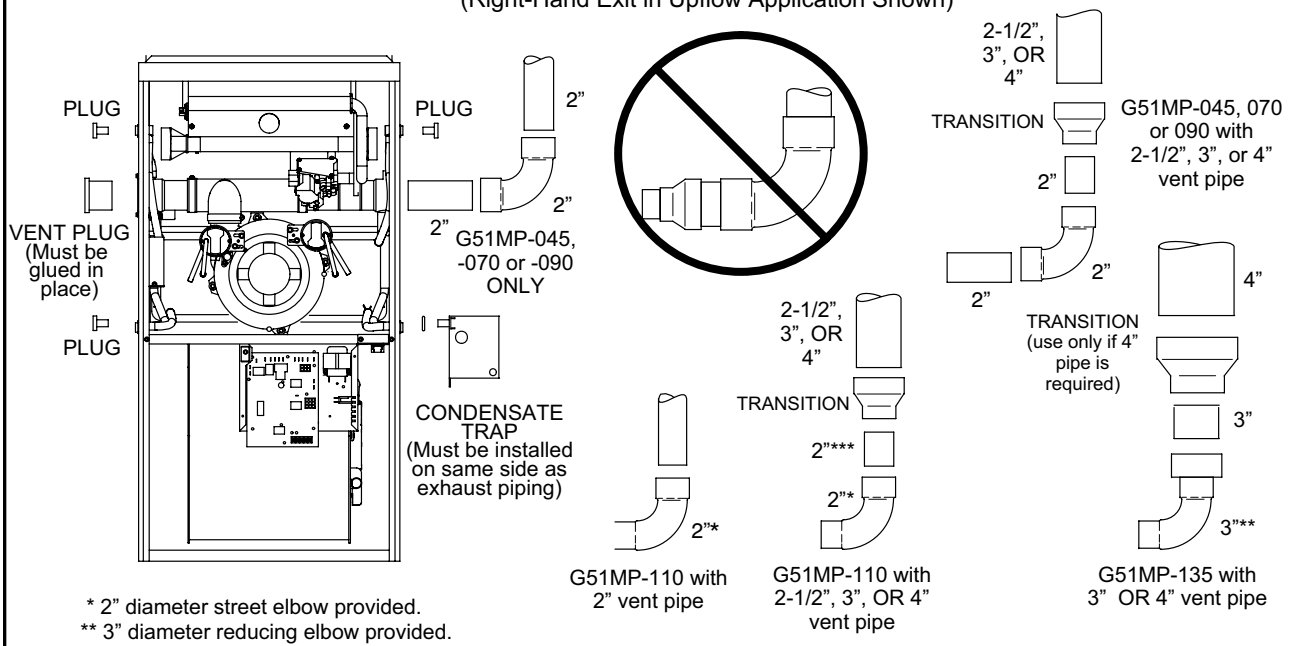

* 2" diameter street elbow provided.
** 3" diameter reducing elbow provided.
*** Limit pipe length to 2".

FIGURE 27

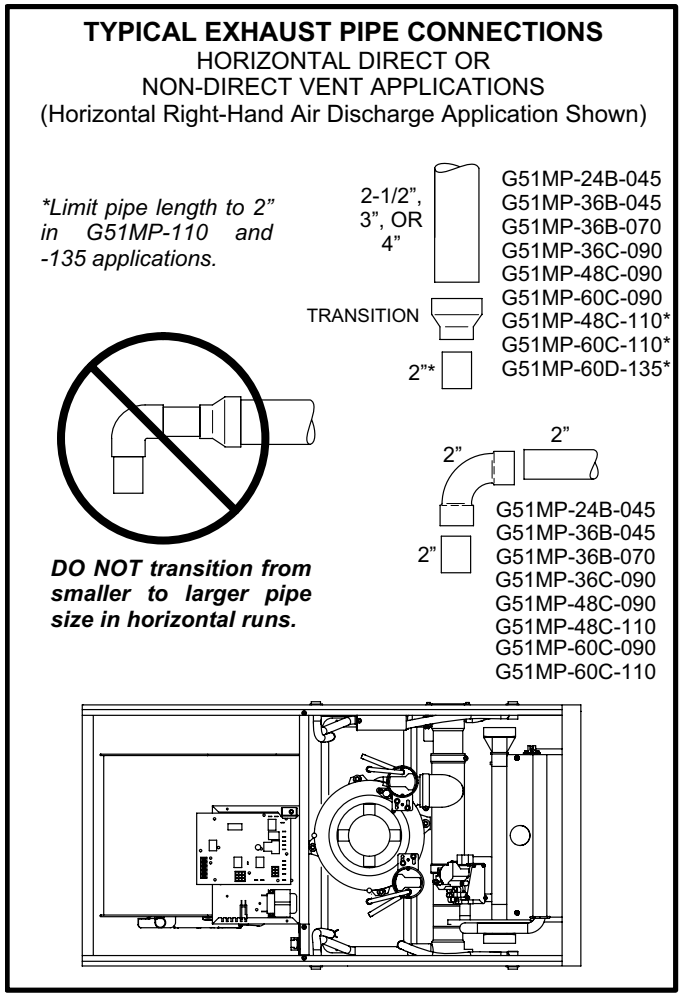

FIGURE 28

⚠ IMPORTANT

Exhaust piping and condensate trap must be installed on the same side of the unit in upflow and dowflow applications or use alternate drain kit 76M20.

2 - All horizontal runs of exhaust pipe must slope back toward unit. A minimum of 1/4" (6mm) drop for each 12" (305mm) of horizontal run is mandatory for drainage. Horizontal runs of exhaust piping must be supported every 5 feet (1.52m) using hangers.

NOTE - Exhaust piping should be checked carefully to make sure there are no sags or low spots.

3 - On the opposite side of the cabinet, glue the provided 2" vent plug into the unused flue collar.

4 - Route piping to outside of structure. Continue with installation following instructions given in piping termination section.

⚠ CAUTION

Do not discharge exhaust into an existing stack or stack that also serves another gas appliance. If vertical discharge through an existing unused stack is required, insert PVC pipe inside the stack until the end is even with the top or outlet end of the metal stack.

⚠ CAUTION

The exhaust vent pipe operates under positive pressure and must be completely sealed to prevent leakage of combustion products into the living space.

Intake Piping

The G51MP furnace may be installed in either **direct vent** or **non-direct vent** applications. In non-direct vent applications, when intake air will be drawn into the furnace from the surrounding space, the indoor air quality must be considered and guidelines listed in Combustion, Dilution and Ventilation Air section must be followed.

The G51MP unit is designed for either left-side or right-side air intake connections in either upflow or downflow applications. In horizontal applications, air intake must be brought in through the top. Intake air piping is independent of exhaust piping.

Follow the next four steps when installing the unit in **Direct Vent applications,** where combustion air is taken from outdoors and flue gases are discharged outdoors. **The provided air intake screen must not be used in direct vent applications.**

1 - Cement intake piping in slip connector located on the side of the burner box.

2 - Use a sheet metal screw to secure the intake pipe to the connector, if desired. A pilot indentation is provided in the slip connector to assist in locating and starting the fastener.

3 - Glue the provided 2" plug into the unused air intake connector on the opposite side of the cabinet.

4 - Route piping to outside of structure. Continue with installation following instructions given in general guide lines for piping terminations and in intake and exhaust piping terminations for direct vent sections. Refer to figure 29 for pipe sizes.

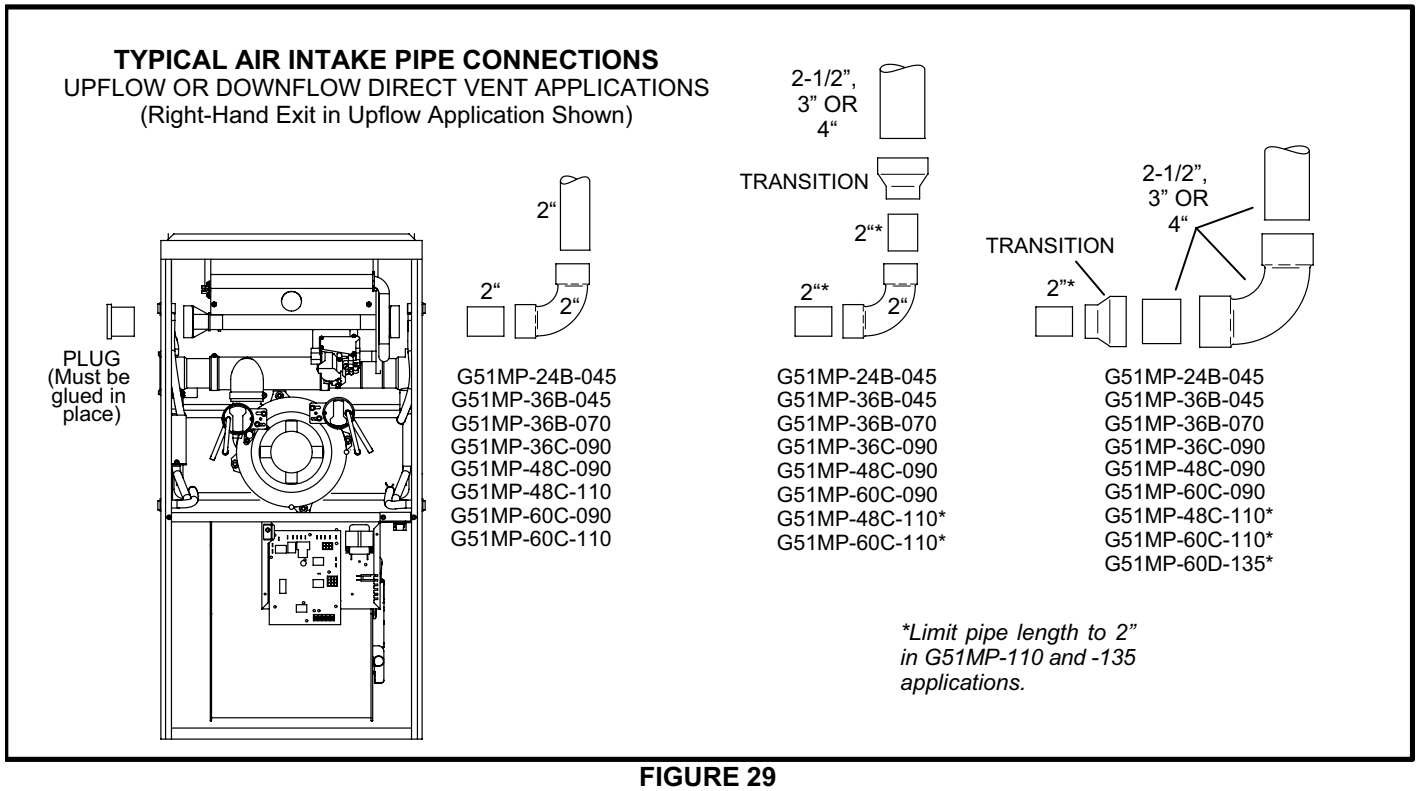

FIGURE 29

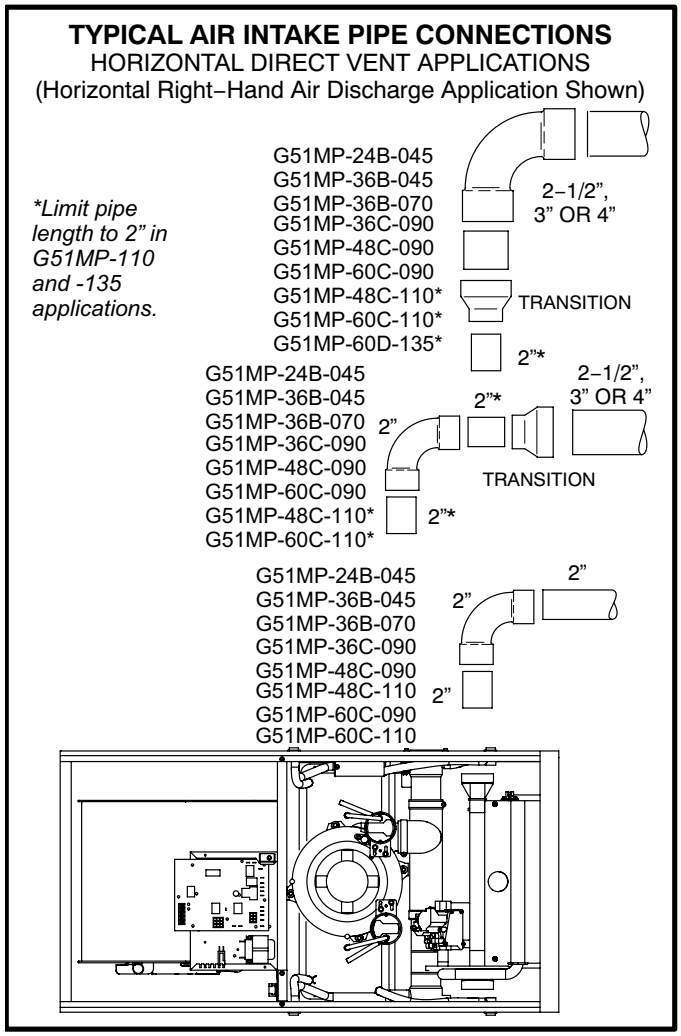

FIGURE 30

Follow the next three steps when installing the unit in **Non-Direct Vent applications** where combustion air is taken from indoors and flue gases are discharged outdoors**.**

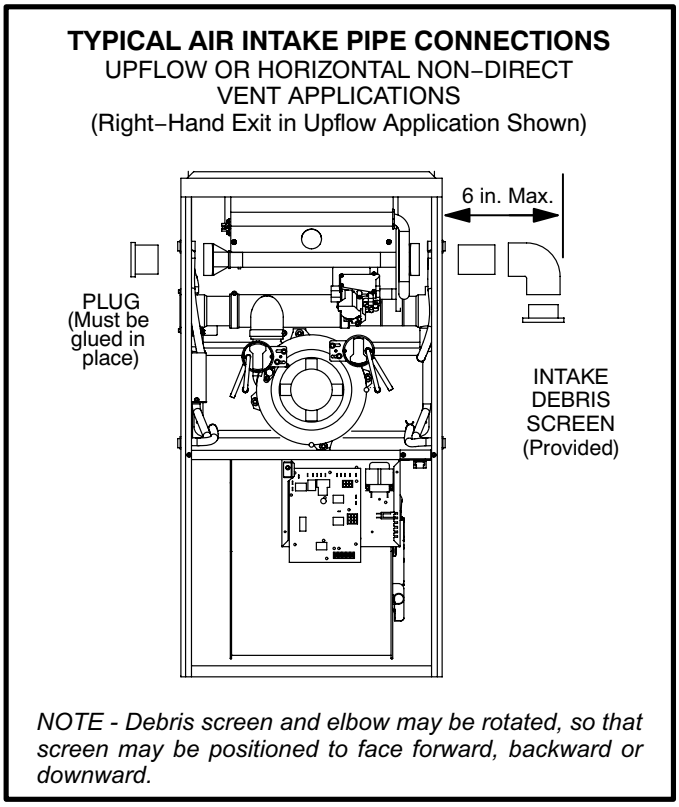

FIGURE 31

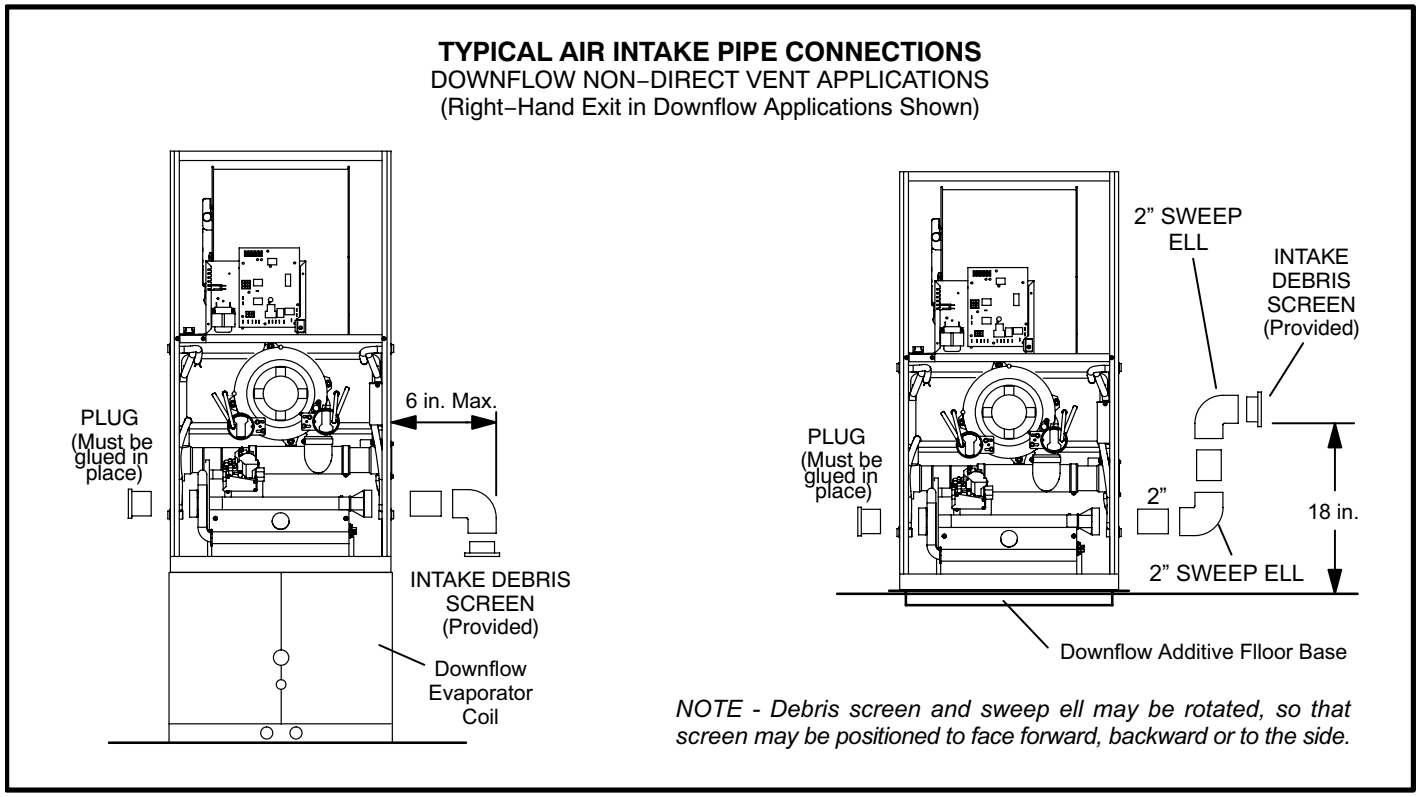

FIGURE 32

1 - Use field-provided materials and the factory-provided air intake screen to route the intake piping as shown in figures 31 and 32. Maintain a minimum clearance of 3" (76mm) around the air intake opening. The air intake opening (with the protective screen) should always be directed either downward or straight out. Use 2" pipe and fittings only and make sure that the air intake does not extend more than 6" beyond the G51MP cabinet. **The air intake connector must not be located near the floor. To avoid this complication in downflow applications which do not include a downflow evaporator coil,** the intake air routing should be modified as shown in figure 32.

2 - Use a sheet metal screw to secure the intake pipe to the connector, if desired. A pilot indentation is provided in the slip connector to assist in locating and starting the fastener.

3 - Glue the provided 2" plug into the unused air intake connector on the opposite side of the cabinet.

Testing for Proper Venting and Sufficient Combustion Air

(Non-Direct Vent Applications Only)

⚠ WARNING

CARBON MONOXIDE POISONING HAZARD!

Failure to follow the steps outlined below for each appliance connected to the venting system being placed into operation could result in carbon monoxide poisoning or death.
The following steps shall be followed for each appliance connected to the venting system being placed into operation, while all other appliances connected to the venting system are not in operation.

After the G51MP gas furnace has been started, the following test should be conducted to ensure proper venting and sufficient combustion air has been provided to the G51MP, as well as to other gas-fired appliances which are separately vented. The test should be conducted while all appliances (both in operation and those not in operation) are connected to the venting system being tested. If the venting system has been installed improperly, or if provisions have not been made for sufficient amounts of combustion air, corrections must be made as outlined in the previous section.

1 - Seal any unused openings in the venting system.

2 - Visually inspect the venting system for proper size and horizontal pitch. Determine there is no blockage or restriction, leakage, corrosion, or other deficiencies which could cause an unsafe condition.

3 - To the extent that it is practical, close all building doors and windows and all doors between the space in which the appliances connected to the venting system are located and other spaces of the building.

4 - Close fireplace dampers.

5 - Turn on clothes dryers and any appliances not connected to the venting system. Turn on any exhaust fans, such as range hoods and bathroom exhausts, so they will operate at maximum speed. Do not operate a summer exhaust fan.

6 - Follow the lighting instruction to place the appliance being inspected into operation. Adjust thermostat so appliance will operate continuously.

7 - Use the flame of match or candle to test for spillage of flue gases at the draft hood relief opening after 5 minutes of main burner operation.

8 - If improper venting is observed during any of the above tests, the venting system must be corrected or sufficient combustion/make-up air must be provided. The venting system should be re-sized to approach the minimum size as determined by using the appropriate tables in appendix G in the current standards of the National Fuel Gas Code ANSI-Z223.1/NPFA 54 in the U.S.A., and the appropriate Natural Gas and Propane appliances venting sizing tables in the current standard of the CSA-B149 Natural Gas and Propane Installation Codes in Canada.

9 - After determining that each appliance remaining connected to the common venting system properly vents when tested as indicated in step 3, return doors, windows, exhaust fans, fireplace dampers and any other gas-burning appliance to their previous condition of use.

General Guidelines for Vent Terminations for Non-Direct Vent Installations.

In Non-Direct Vent applications, combustion air is taken from indoors and the flue gases are discharged to the outdoors. The G51MP is then classified as a non-direct vent, Category IV gas furnace. In Non-Direct Vent applications, the vent termination is limited by local building codes. In the absence of local codes, refer to the current National Fuel Gas Code ANSI Z223-1/NFPA 54 in U.S.A., and current CSA-B149 Natural Gas and Propane Installation Codes in Canada for details.

Position termination end according to location given in figure 33. In addition, position termination end so it is free from any obstructions and above the level of snow accumulation (where applicable). The termination should be at least 12 inches (305mm) from any opening through which flue products could enter the building.

At vent termination, care must be taken to maintain protective coatings over building materials (prolonged exposure to exhaust condensate can destroy protective coatings). It is recommended that the exhaust outlet not be located within 6 feet (1.8m) of a condensing unit because the condensate can damage the painted coating.

NOTE - If winter design temperature is below 32°F (0°C), exhaust piping should be insulated with 1/2" (13mm), Armaflex or equivalent when run through unheated space. Do not leave any surface area of exhaust pipe open to outside air; exterior exhaust pipe should be insulated with 1/2" (13mm) Armaflex or equivalent. In extreme cold climate areas, 3/4" (19mm) Armaflex or equivalent may be necessary. Insulation on outside runs of exhaust pipe must be painted or wrapped to protect insulation from deterioration. Exhaust pipe insulation may not be necessary in some specific applications.

NOTE - During extremely cold temperatures, below approximately 20°F (6.7°C), units with long runs of vent pipe through unconditioned space, even when insulated, may form ice in the exhaust termination that prevents the unit from operating properly. Longer run times of at least 5 minutes will alleviate most icing problems. Also, a heating cable may be installed on exhaust piping and termination to prevent freeze-ups. Heating cable installation kit is available from Lennox. See Condensate Piping section for part numbers.

⚠ IMPORTANT

Do not use screens or perforated metal in exhaust terminations. Doing so will cause freeze-ups and may block the terminations.

⚠ IMPORTANT

For Canadian Installations Only:
In accordance to CSA International B149 installation codes, the minimum allowed distance between the combustion air intake inlet and the exhaust outlet of other appliances shall not be less than 12 inches (305mm).

VENT TERMINATION CLEARANCES FOR INSTALLATIONS IN THE USA AND CANADA*

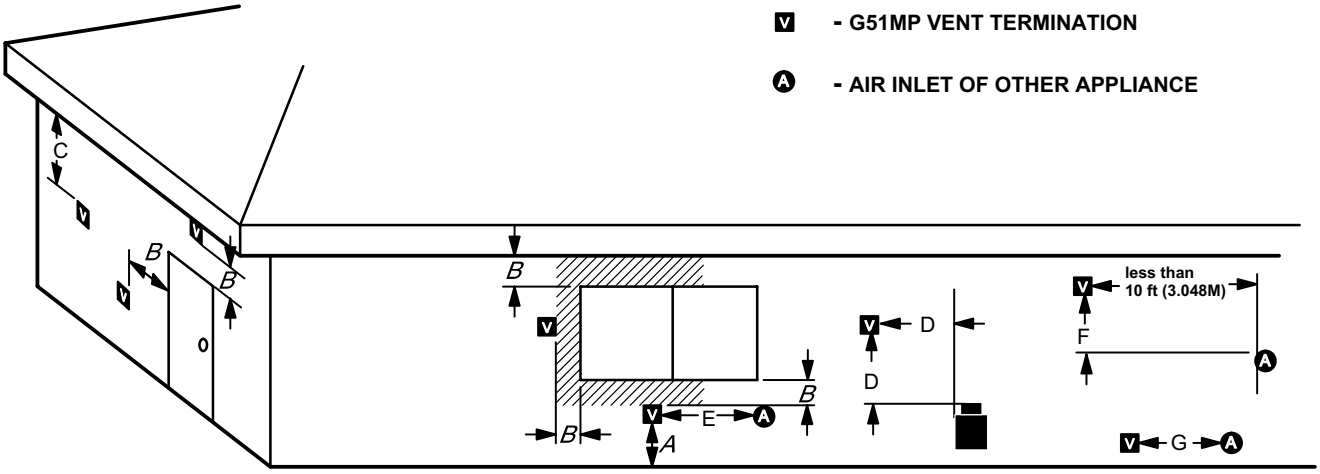

A - *Clearance above grade* - 12 in. (305mm) minimum.

B - *Clearance to window or door* that may be opened -
for vent installations in USA - 12 in. (305mm) minimum.
for vent installations in Canada - 12 in. (305mm) minimum for appliances $\leq$ 100,000 Btuh (30 kW);
36 in. (0.9m) minimum for appliances > 100,000 Btuh (30 kW).

C - *Do not position terminations directly under roof eaves.*

D - *Clearance to electric meters, gas meters, regulators, and relief equipment* -
for vent installations in USA - 48 in (1219mm) minimum.
for vent installations in Canada - see current edition of CSA B149 Code.

E - *Clearance to non-mechanical air supply inlet* or outlet
for vent installations in USA - 48 in. (1219mm) minimum horizontal and below, 12 in. (305mm) minimum above.
for vent installations in Canada - 12 in. (305mm) minimum for appliances $\leq$ 100,000 Btuh (30 kW);
36 in. (0.9m) minimum for appliances > 100,000 Btuh (30 kW).

F - *Clearance to mechanical air supply inlet* --
for vent installations in USA - 36 in. minimum (914mm**).**

G - *Clearance to mechanical air supply inlet* --
for vent installations in Canada - 72 in. (1829mm) minimum.

H - *Do not point terminations into recessed areas such as window wells, stairwells or alcoves.*

J - *Do not position terminations directly above a walkway.*

* Note -
(I) Dimensions are from the current edition of The National Fuel Gas Code - ANSI-Z223.1/NFPA 54 for USA installations. In Canada, refer to current edition of CSA B149 installation codes. Local codes or regulations may require different clearances.

(II) In Non-Direct Vent installations, combustion air is taken from indoors and the flue gases are discharged to the outdoors.

FIGURE 33

Details of Intake and Exhaust Piping Terminations for Direct Vent Installations

NOTE - In Direct Vent installations, combustion air is taken from outdoors and flue gases are discharged to outdoors. Intake and exhaust pipes may be routed either horizontally through an outside wall or vertically through the roof. In attic or closet installations, vertical termination through the roof is preferred. Figures 34 through 42 show typical terminations.

1 - Exhaust and intake exits must be in same pressure zone. Do not exit one through the roof and one on the side. Also, do not exit the intake on one side and the exhaust on another side of the house or structure.

2 - Intake and exhaust pipes should be placed as close together as possible at termination end (refer to illustrations). Maximum separation is 3" (76mm) on roof terminations and 6" (152mm) on side wall terminations.

3 - If necessary, install a field-provided reducer to adapt larger vent pipe size to termination pipe size.

4 - On roof terminations, the intake piping should terminate straight down using two 90° elbows (See figure 34).

5 - Exhaust piping must terminate straight out or up as shown. In rooftop applications, a reducer may be required on the exhaust piping at the point where it exits the structure to improve the velocity of exhaust away from the intake piping. See table 8.

NOTE - Care must be taken to avoid recirculation of exhaust back into intake pipe.

TABLE 8
EXHAUST PIPE TERMINATION SIZE REDUCTION

G51MP MODEL	Exhaust Pipe Size	Termination Pipe Size
045 and 070	2", 2-1/2", 3" or 4"	1-1/2"
090	2", 2-1/2", 3" or 4"	2"
110	2", 2-1/2", 3" or 4"	2"*
135	3" or 4"	2"*

**Approved 3" concentric termination kit terminates with 2-5/8" ID pipe.*

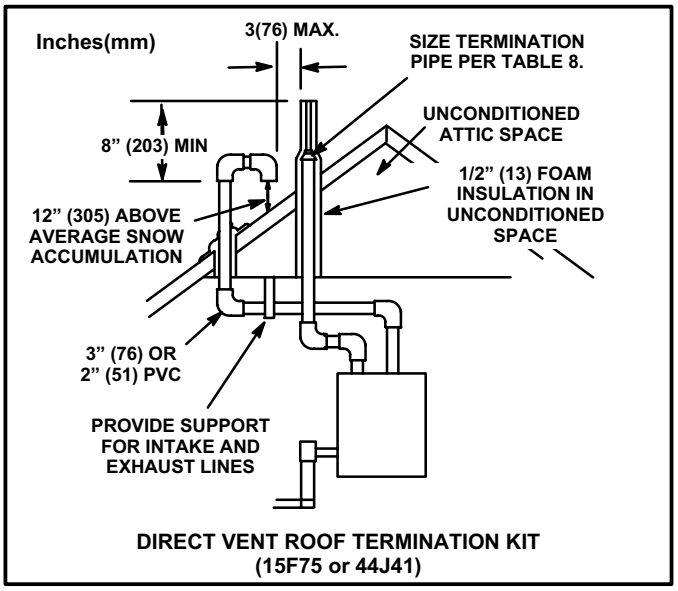

FIGURE 34

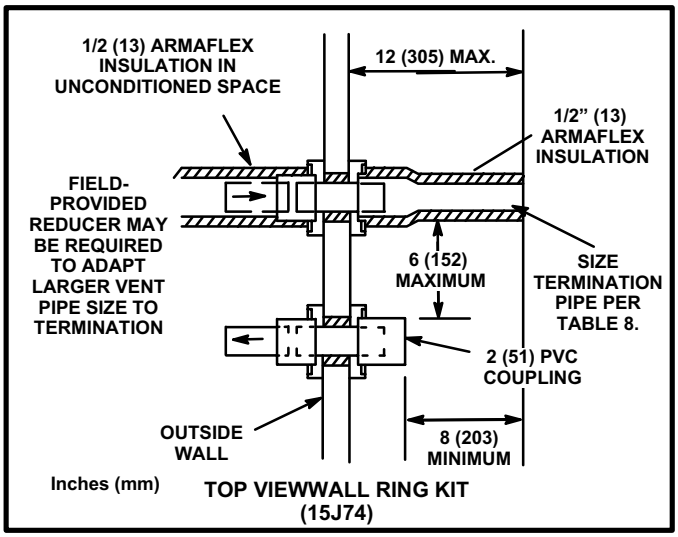

FIGURE 35

6 - On field supplied terminations for side wall exits, exhaust piping should extend a maximum of 12 inches (305mm) beyond the outside wall. Intake piping should be as short as possible. See figure 35.

7 - On field supplied terminations, a minimum separation distance between the end of the exhaust pipe and the end of the intake pipe is 8 inches (203mm).

8 - If intake and exhaust piping must be run up a side wall to position above snow accumulation or other obstructions, piping must be supported every 3 ft. (.9m) as shown in figure 26. Refer to figure 38 for proper piping method. In addition, WTK wall termination kit must be extended for use in this application. See figure 41. When exhaust and intake piping must be run up an outside wall, the exhaust piping must be terminated with pipe sized per table 8. The intake piping may be equipped with a 90° elbow turndown. Using turndown will add 5 feet (1.5m) to the equivalent length of the pipe.

9 - Based on the recommendation of the manufacturer, a multiple furnace installation may use a group of up to four termination kits WTK assembled together horizontally, as shown in figure 40.

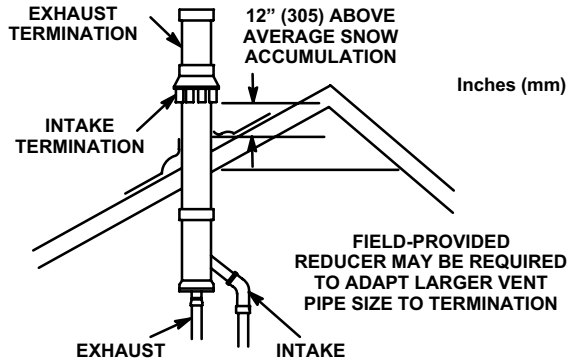

DIRECT VENT CONCENTRIC ROOFTOP TERMINATION
(71M80, 69M29 or 60L46)

FIGURE 36

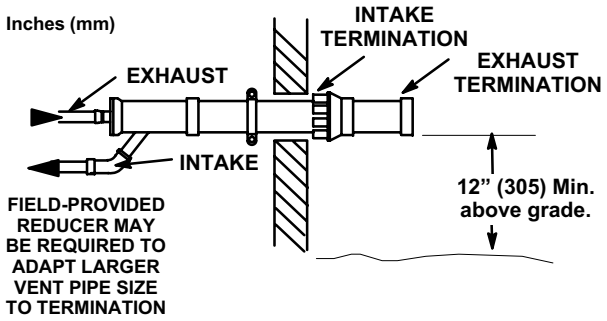

DIRECT VENT CONCENTRIC WALL TERMINATION
(71M80, 69M29 or 60L46)

FIGURE 37

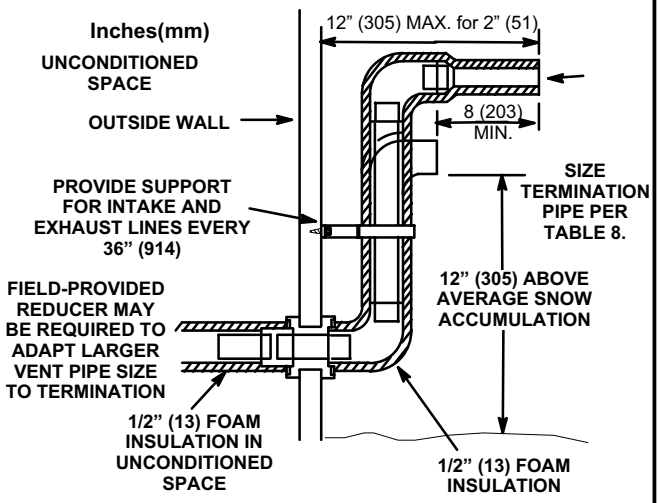

SIDE VIEW
DIRECT VENT WALL RING TERMINATION
(15F74)

See venting table 7 for maximum venting lengths with this arrangement.

FIGURE 38

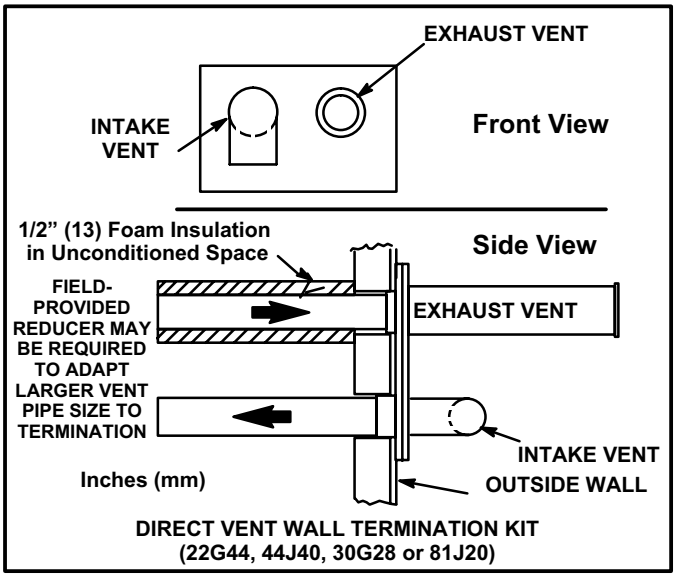

DIRECT VENT WALL TERMINATION KIT
(22G44, 44J40, 30G28 or 81J20)

FIGURE 39

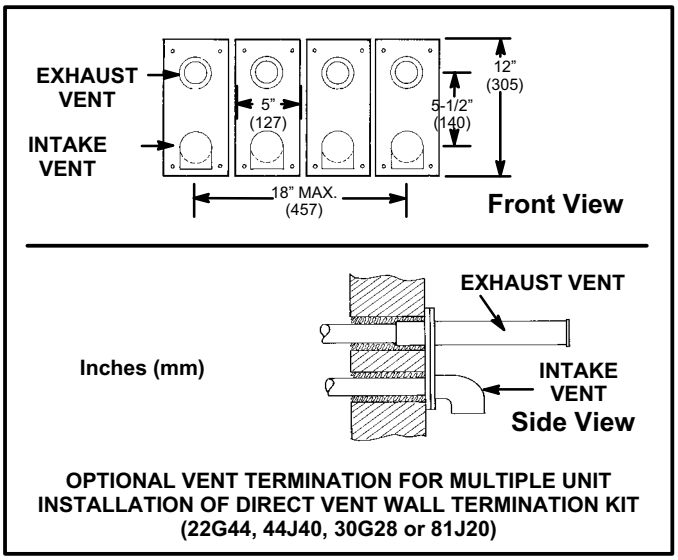

OPTIONAL VENT TERMINATION FOR MULTIPLE UNIT INSTALLATION OF DIRECT VENT WALL TERMINATION KIT
(22G44, 44J40, 30G28 or 81J20)

FIGURE 40

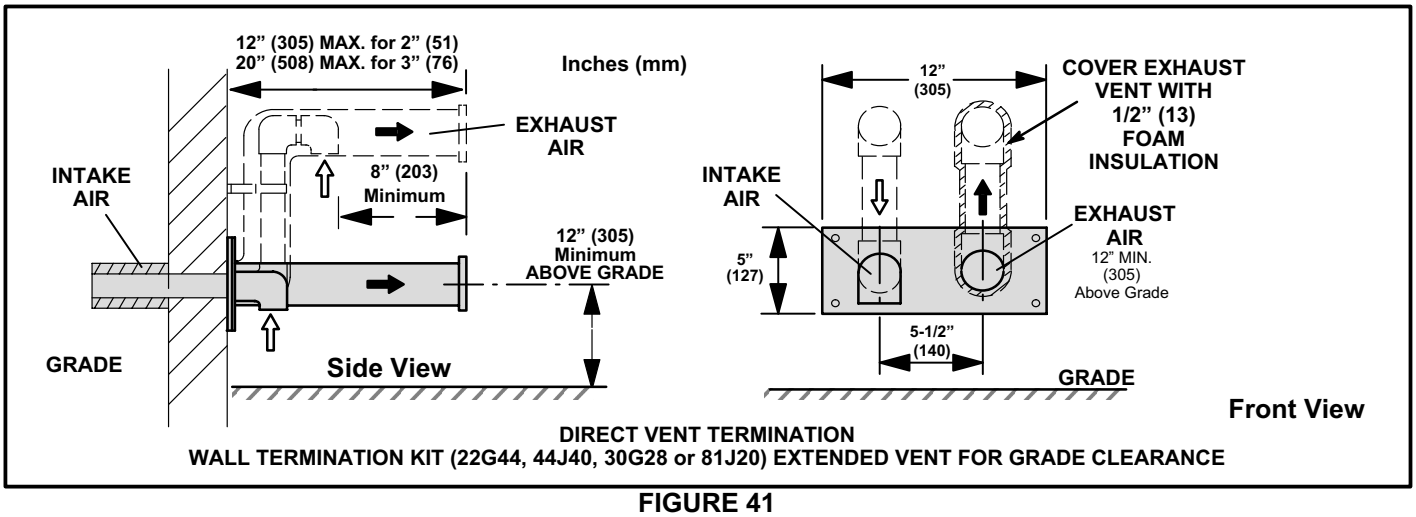

DIRECT VENT TERMINATION
WALL TERMINATION KIT (22G44, 44J40, 30G28 or 81J20) EXTENDED VENT FOR GRADE CLEARANCE

FIGURE 41

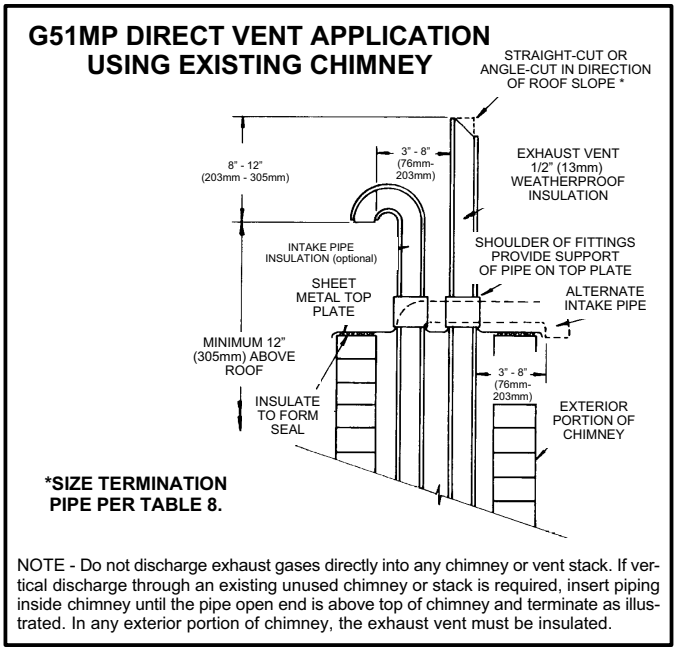

NOTE - Do not discharge exhaust gases directly into any chimney or vent stack. If vertical discharge through an existing unused chimney or stack is required, insert piping inside chimney until the pipe open end is above top of chimney and terminate as illustrated. In any exterior portion of chimney, the exhaust vent must be insulated.

FIGURE 42

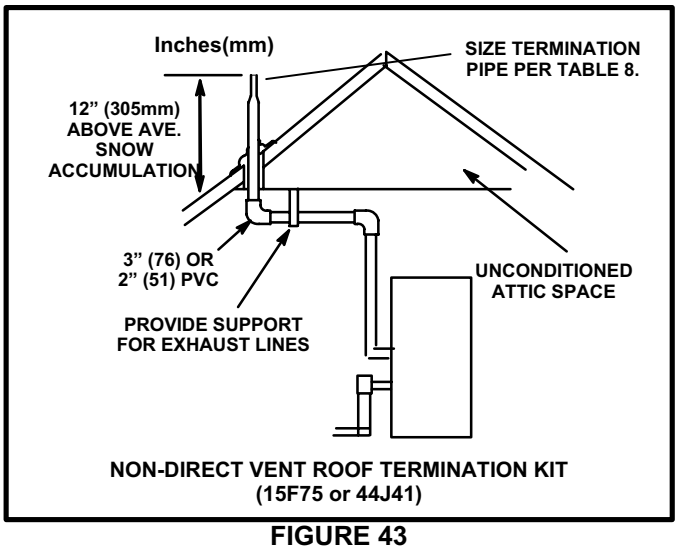

NON-DIRECT VENT ROOF TERMINATION KIT
(15F75 or 44J41)

FIGURE 43

Details of Exhaust Piping Terminations for Non-Direct Vent Applications

Exhaust pipes may be routed either horizontally through an outside wall or vertically through the roof. In attic or closet installations, vertical termination through the roof is preferred. Figures 43 through 46 show typical terminations.

1 - Exhaust piping must terminate straight out or up as shown. The termination pipe must be sized as listed in table 8.The specified pipe size ensures proper velocity required to move the exhaust gases away from the building.

2 - On field supplied terminations for side wall exits, exhaust piping should extend a maximum of 12 inches (305mm) beyond the outside wall. See figure 44.

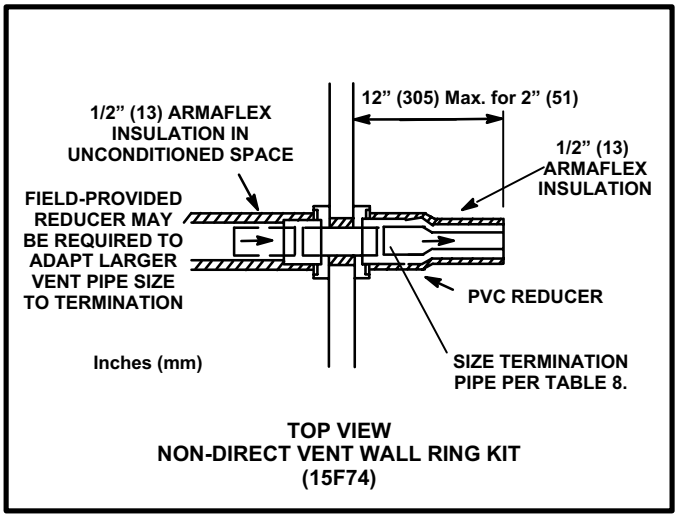

TOP VIEW
NON-DIRECT VENT WALL RING KIT
(15F74)

FIGURE 44

3 - If exhaust piping must be run up a side wall to position above snow accumulation or other obstructions, piping must be supported every 3 feet (.9m) as shown in figure 26. Refer to figure 45 for proper piping method. When exhaust piping must be run up an outside wall, any reduction in exhaust pipe size must be done after the final elbow.

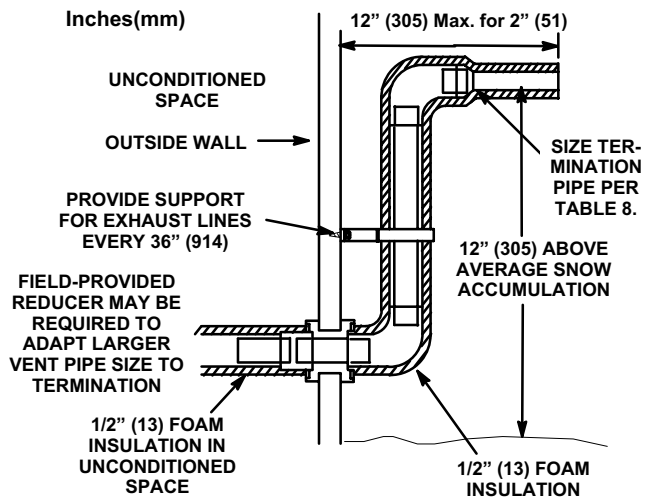

SIDE VIEW
NON-DIRECT VENT WALL RING TERMINATION
(15F74)

FIGURE 45

G51MP NON-DIRECT VENT APPLICATION USING EXISTING CHIMNEY

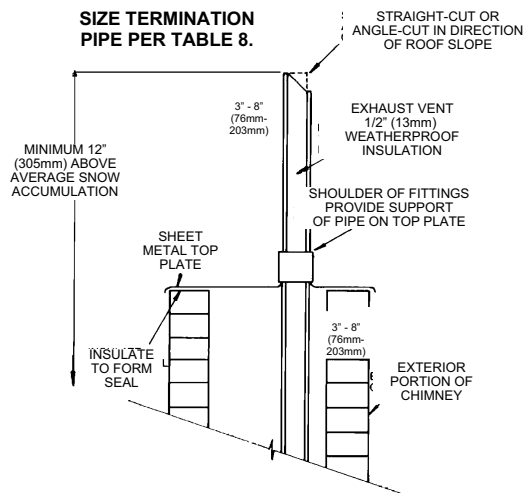

NOTE - Do not discharge exhaust gases directly into any chimney or vent stack. If vertical discharge through an existing unused chimney or stack is required, insert piping inside chimney until the pipe open end is above top of chimney and terminate as illustrated. In any exterior portion of chimney, the exhaust vent must be insulated.

FIGURE 46

Condensate Piping

This unit is designed for either right- or left-side exit of condensate piping in either upflow or downflow applications; however, it must be installed on the same side of the unit as the exhaust piping. In horizontal applications, the condensate trap should extend below the unit. A 5-1/2" service clearance is required for the condensate trap. Refer to figure for condensate trap locations.

CONDENSATE TRAP LOCATIONS
(Unit shown in upflow position)

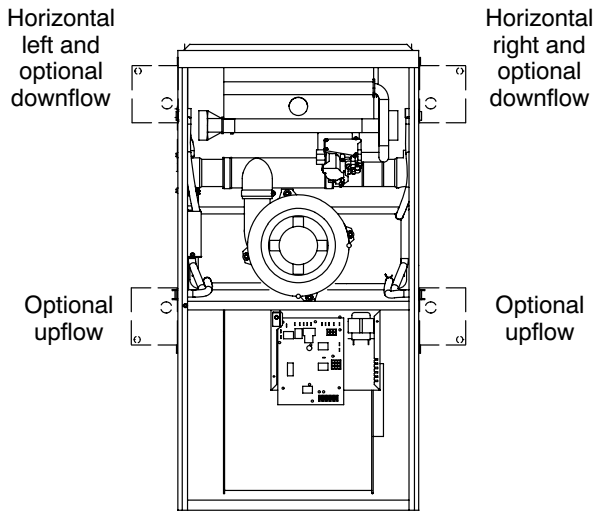

NOTE - In upflow applications where side return air filter is installed on same side as the condensate trap, filter rack must be installed beyond condensate trap to avoid interference.

FIGURE 47

1 - Determine which side condensate piping will exit the unit. Remove plugs from the condensate collar at the appropriate location on the side of the unit.

NOTE - The condensate trap is factory-shipped with two rubber O-rings and two rubber clean-out caps installed. Check to make sure that these items are in place before installing the trap assembly.

2 - Install condensate trap onto the condensate collar. Use provided HI/LO screws to secure two upper flanges of the trap to the collar. Use provided sheet metal screw to secure bottom trap flange to side of unit. See figure 48.

NOTE - In upflow and downflow applications, condensate trap must be installed on the same side as exhaust piping.

⚠ CAUTION

DO NOT use a power driver to tighten screws which secure condensate trap to cabinet. Screws should be hand-tightened using a screw driver to avoid the possibility of damage to the trap assembly.

3 - Glue the field-provided coupling or pipe to the trap. Install a tee and vent pipe near the trap.

NOTE - The condensate trap drain stubs (both sides) have an outer diameter which will accept a standard 3/4" PVC coupling. The inner diameter of each stub will accept standard 1/2" diameter PVC pipe.

NOTE - Vinyl tubing may be used for condensate drain. Tubing must be 1-1/4" OD X 1" ID and should be attached to the drain stubs on the trap using a hose clamp.

4 - Glue the field-provided drain line to the tee. Route the drain line to an open drain. As an alternate, clear vinyl tubing may be used to drain condensate away from the trap. Secure the vinyl tubing to the drain stubs on the trap using a hose clamp. Do not overtighten the hose clamp.
Condensate line must be sloped downward away from condensate trap to drain. If drain level is above condensate trap, condensate pump must be used. Condensate drain line should be routed within the conditioned space to avoid freezing of condensate and blockage of drain line. If this is not possible, a heat cable kit may be used on the condensate trap and line. Heating cable kit is available from Lennox in various lengths; 6 ft. (1.8m) - kit no. 26K68; 24 ft. (7.3m) - kit no. 26K69; and 50 ft. (15.2m) - kit no. 26K70.

⚠ CAUTION

Do not use copper tubing or existing copper condensate lines for drain line.

5 - If unit will be started immediately upon completion of installation, prime trap per procedure outlined in Unit Start-Up section.

6 - Glue the provided cap onto the unused condensate drain line stub.

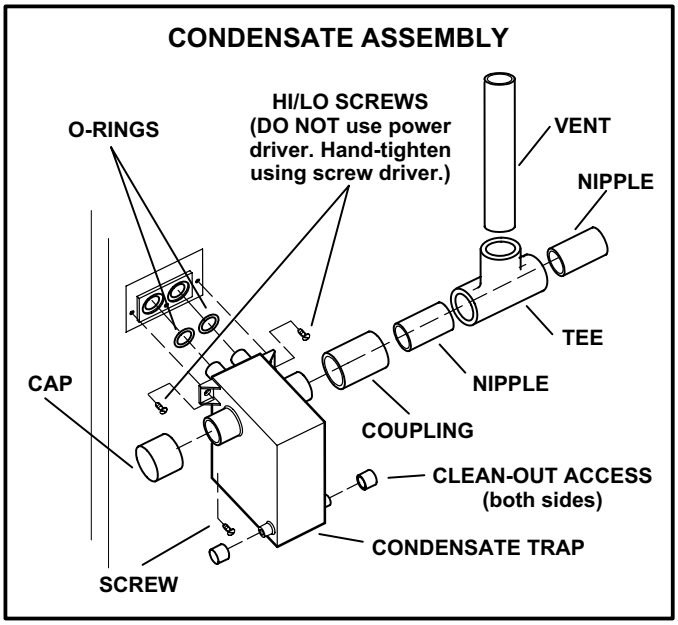

FIGURE 48

Gas Piping

⚠ CAUTION

If a flexible gas connector is required or allowed by the authority that has jurisdiction, black iron pipe shall be installed at the gas valve and extend outside the furnace cabinet.

⚠ WARNING

Do not exceed 600 in-lbs (50 ft-lbs) torque when attaching the gas piping to the gas valve.

1 - Gas piping may be routed into the unit through either the left- or right-hand side. Supply piping enters into the gas valve from the side of the valve as shown in figure 51 or 51.

⚠ IMPORTANT

The Honeywell VR8205 gas valve requires a low inlet pressure switch in LP/propane applications. A 4" BIP nipple must be installed in the gas valve inlet when right-side gas entry is used in LP/propane applications. See figure 50 or 51.

2 - When connecting gas supply, factors such as length of run, number of fittings and furnace rating must be considered to avoid excessive pressure drop. Table 9 lists recommended pipe sizes for typical applications.
NOTE - Use two wrenches when connecting gas piping to avoid transferring torque to the manifold.

3 - Gas piping must not run in or through air ducts, clothes chutes, chimneys or gas vents, dumb waiters or elevator shafts. Center gas line through piping hole. Gas line should not touch side of unit. See figure 51 or 51.

4 - Piping should be sloped 1/4 inch per 15 feet (6mm per 5.6m) upward toward the gas meter from the furnace. The piping must be supported at proper intervals, every 8 to 10 feet (2.44 to 3.05m), using suitable hangers or straps. Install a drip leg in vertical pipe runs to serve as a trap for sediment or condensate.

5 - A 1/8" N.P.T. plugged tap or pressure post is located on the gas valve to facilitate test gauge connection. See figures 58 and 60.

6 - In some localities, codes may require installation of a manual main shut-off valve and union (furnished by installer) external to the unit. Union must be of the ground joint type.

⚠ IMPORTANT

Compounds used on threaded joints of gas piping must be resistant to the actions of liquified petroleum gases.

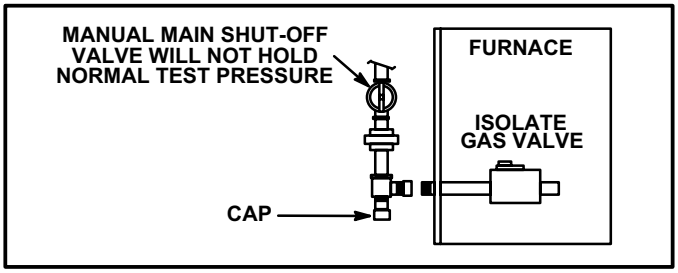

FIGURE 49

Leak Check

After gas piping is completed, carefully check all piping connections (factory- and field-installed) for gas leaks. Use a leak detecting solution or other preferred means.

The furnace must be isolated from the gas supply system by closing its individual manual shut-off valve during any pressure testing of the gas supply system at pressures less than or equal to *1/2 psig (3.48 kPa, 14 inches w.c.).*

⚠IMPORTANT

When testing pressure of gas lines, gas valve must be disconnected and isolated. See figure 49. Gas valves can be damaged if subjected to pressures greater than 1/2 psig (3.48 kPa).

⚠WARNING

FIRE OR EXPLOSION HAZARD

Failure to follow the safety warnings exactly could result in serious injury, death, or property damage. Never use an open flame to test for gas leaks. Check all connections using a commercially available soap solution made specifically for leak detection.Some soaps used for leak detection are corrosive to certain metals. Carefully rinse piping thoroughly after leak test has been completed.

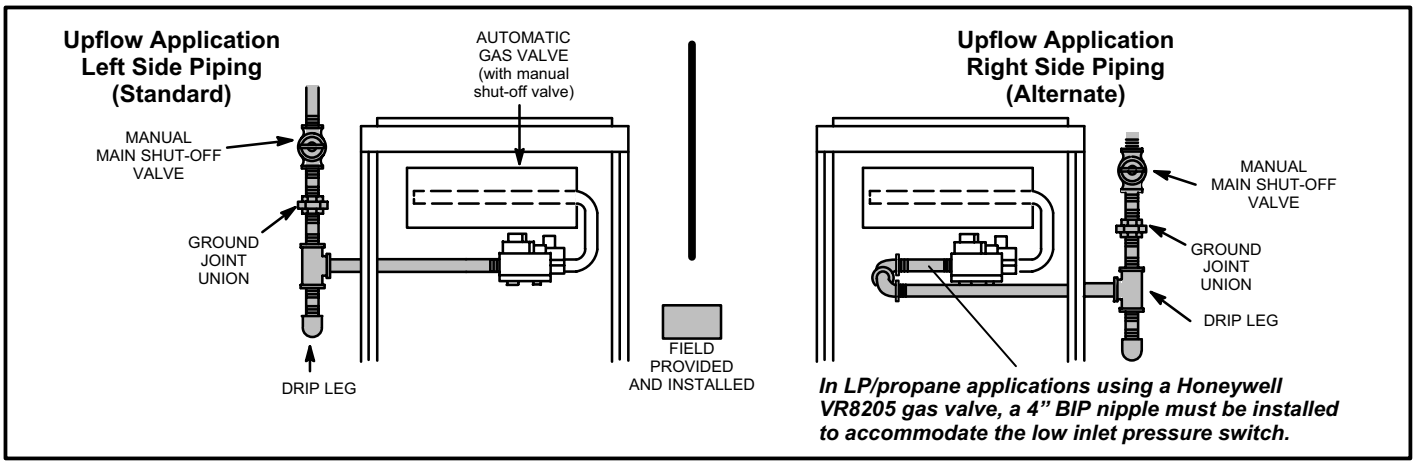

FIGURE 50

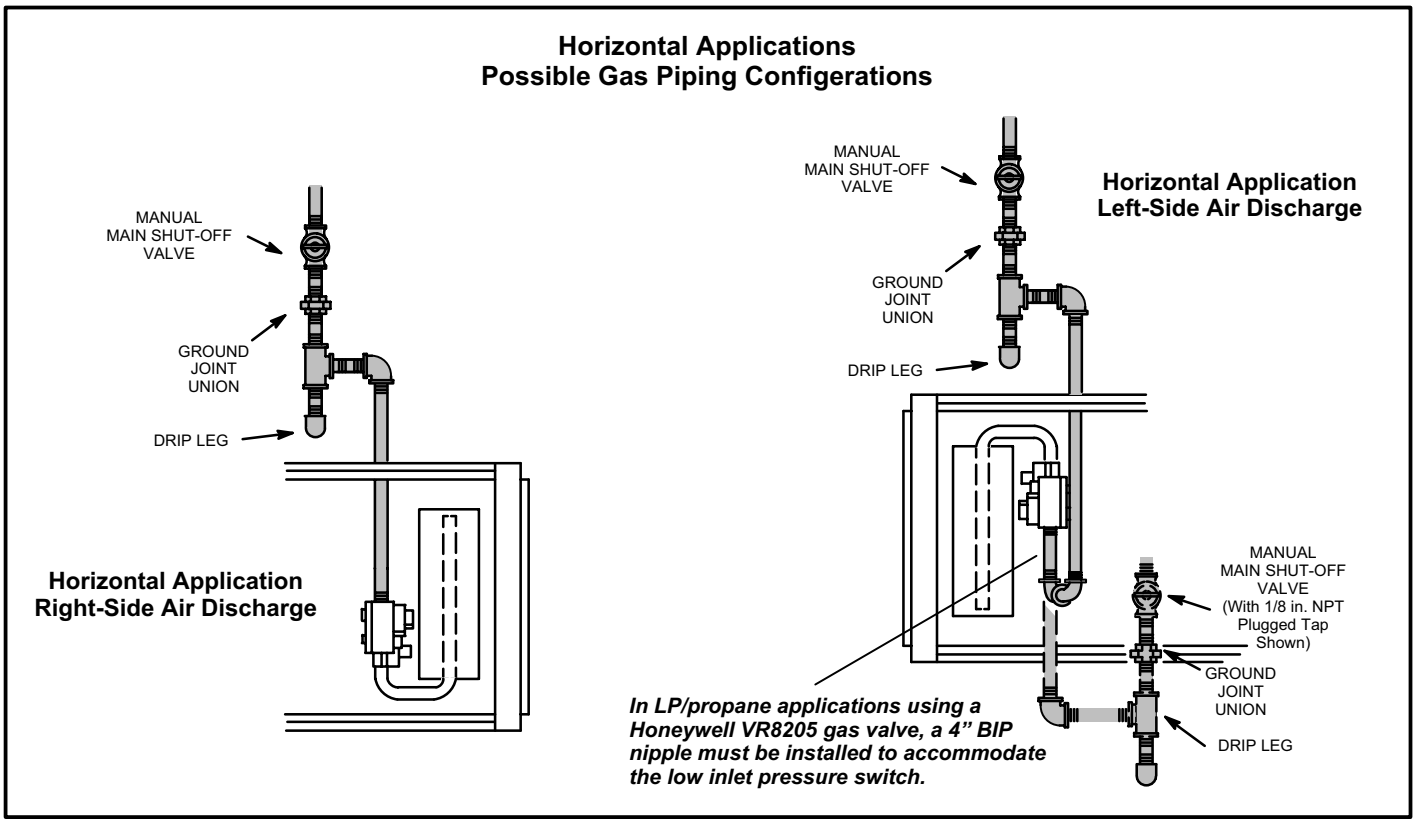

FIGURE 51

TABLE 9
GAS PIPE CAPACITY - FT³/HR (kL/HR)

Nominal Iron Pipe Size -Inches(mm)	Internal Diameter -Inches(mm)	Length of Pipe-Feet(m)									
		10 (3.048)	20 (6.096)	30 (9.144)	40 (12.192)	50 (15.240)	60 (18.288)	70 (21.336)	80 (24.384)	90 (27.432)	100 (30.480)
1/4 (6.35)	.364 (9.246)	43 (1.13)	29 (.82)	24 (.68)	20 (.57)	18 (.51)	16 (.45)	15 (.42)	14 (.40)	13 (.37)	12 (.34)
3/8 (9.53)	.493 (12.522)	95 (2.69)	65 (1.84)	52 (1.47)	45 (1.27)	40 (1.13)	36 (1.02)	33 (.73)	31 (.88)	29 (.82)	27 (.76)
1/2 (12.7)	.622 (17.799)	175 (4.96)	120 (3.40)	97 (2.75)	82 (2.32)	73 (2.07)	66 (1.87)	61 (1.73)	57 (1.61)	53 (1.50)	50 (1.42)
3/4 (19.05)	.824 (20.930)	360 (10.19)	250 (7.08)	200 (5.66)	170 (4.81)	151 (4.28)	138 (3.91)	125 (3.54)	118 (3.34)	110 (3.11)	103 (2.92)
1 (25.4)	1.049 (26.645)	680 (19.25)	465 (13.17)	375 (10.62)	320 (9.06)	285 (8.07)	260 (7.36)	240 (6.80)	220 (6.23)	205 (5.80)	195 (5.52)
1-1/4 (31.75)	1.380 (35.052)	1400 (39.64)	950 (26.90)	770 (21.80)	660 (18.69)	580 (16.42)	530 (15.01)	490 (13.87)	460 (13.03)	430 (12.18)	400 (11.33)
1-1/2 (38.1)	1.610 (40.894)	2100 (59.46)	460 (41.34)	1180 (33.41)	990 (28.03)	900 (25.48)	810 (22.94)	750 (21.24)	690 (19.54)	650 (18.41)	620 (17.56)
2 (50.8)	2.067 (52.502)	3950 (111.85)	2750 (77.87)	2200 (62.30)	1900 (53.80)	1680 (47.57)	1520 (43.04)	1400 (39.64)	1300 (36.81)	1220 (34.55)	1150 (32.56)
2-1/2 (63.5)	2.469 (67.713)	6300 (178.39)	4350 (123.17)	3520 (99.67)	3000 (84.95)	2650 (75.04)	2400 (67.96)	2250 (63.71)	2050 (58.05)	1950 (55.22)	1850 (52.38)
3 (76.2)	3.068 (77.927)	11000 (311.48)	7700 (218.03)	6250 (176.98)	5300 (150.07)	4750 (134.50)	4300 (121.76)	3900 (110.43)	3700 (104.77)	3450 (97.69)	3250 (92.03)
4 (101.6)	4.026 (102.260)	23000 (651.27)	15800 (447.39)	12800 (362.44)	10900 (308.64)	9700 (274.67)	8800 (249.18)	8100 (229.36)	7500 (212.37)	7200 (203.88)	6700 (189.72)

NOTE - Capacity given in cubic feet of gas per hour (kilo liters of gas per hour) and based on 0.60 specific gravity gas.

Electrical

ELECTROSTATIC DISCHARGE (ESD)
Precautions and Procedures

⚠ CAUTION

Electrostatic discharge can affect electronic components. Take precautions during furnace installation and service to protect the furnace's electronic controls. Precautions will help to avoid control exposure to electrostatic discharge by putting the furnace, the control and the technician at the same electrostatic potential. Neutralize electrostatic charge by touching hand and all tools on an unpainted unit surface, such as the gas valve or blower deck, before performing any service procedure.

INTERIOR MAKE-UP BOX INSTALLATION

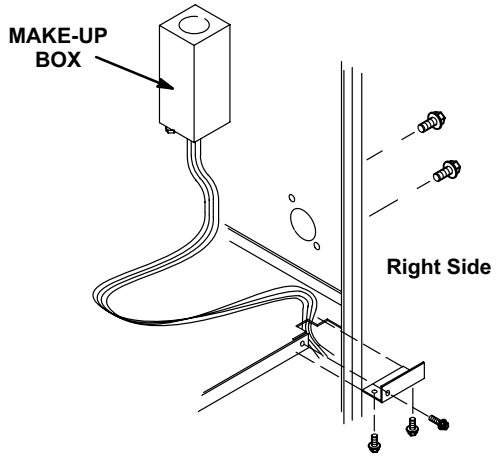

FIGURE 52

INTERIOR MAKE-UP BOX INSTALLATION

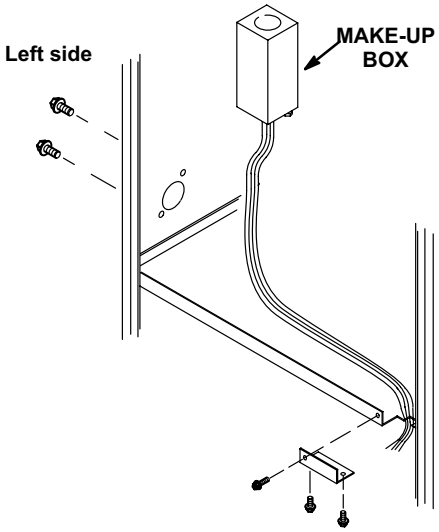

FIGURE 53

The unit is equipped with a field make-up box. The make-up box may be moved to the right side of the furnace to facilitate installation. If the make-up box is moved to the right side, the excess wire must be pulled into the blower compartment. Secure the excess wire to the existing harness to protect it from damage.

Refer to figure 55 for field wiring and figure 57 for schematic wiring diagram and troubleshooting.

1 - Select circuit protection and wire size according to the unit nameplate. The power supply wiring must meet Class I restrictions.

2 - Holes are on both sides of the furnace cabinet to facilitate wiring.

3 - Install a separate disconnect switch (protected by either fuse or circuit breaker) near the furnace so that power can be turned off for servicing.

4 - Before connecting the thermostat or the power wiring, check to make sure the wires will be long enough for servicing at a later date. Remove the blower access panel to check the length of the wire.

5 - Complete the wiring connections to the equipment. Use the provided unit wiring diagram and the field wiring diagram shown in figure 55. Use 18-gauge wire or larger that is suitable for Class II rating for thermostat connections.

6 - Electrically ground the unit according to local codes or, in the absence of local codes, according to the current National Electric Code (ANSI/NFPA No. 70) for the USA and current Canadian Electric Code part 1 (CSA standard C22.1) for Canada. A green ground wire is provided in the field make-up box.
NOTE - The G51MP furnace contains electronic components that are polarity sensitive. Make sure that the furnace is wired correctly and is properly grounded.

7 - One line voltage "EAC" accessory terminal is provided on the furnace control board. Any electronic air cleaner rated up to one amp can be connected to this terminal with the neutral leg of the circuit being connected to the any of the "NEUTRAL" terminals. See figure 56 for control board configuration. This terminal is energized whenever the blower is operating.

8 - One line voltage "HUM" accessory terminal is provided on the furnace control board. Any humidifier rated up to one amp can be connected to this terminal with the neutral leg of the circuit being connected to any of the "NEUTRAL" terminals. See figure 56 for control board configuration. This terminal is energized in the heating mode whenever the combustion air inducer is operating.

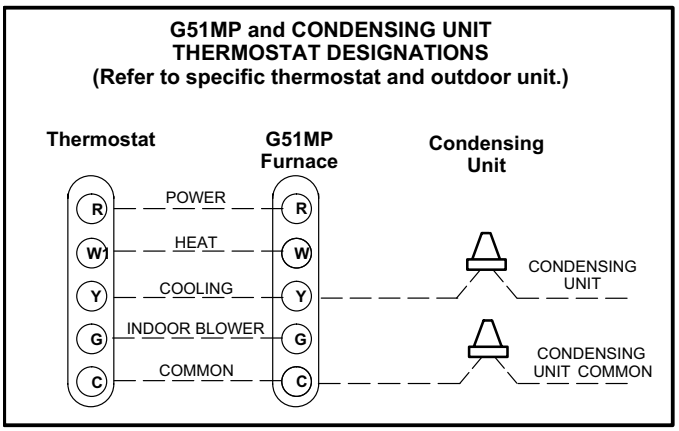

FIGURE 54

9 - One 24 volt "24V HUM" terminal is provided on the furnace control board. Any humidifier rated up to 0.5 amp can be connected to this terminal with the common leg of the circuit being connected to the "C" terminal of the thermostat terminal block, which is located on the control board.

10 - Install the room thermostat according to the instructions provided with the thermostat. See figure 54 for thermostat designations. If the furnace is being matched with a heat pump, refer to the FM21 installation instruction.

Indoor Blower Speeds

1 - When the thermostat is set to "FAN ON," the indoor blower will run continuously on the continuous low speed (FAN) when there is no cooling or heating demand.

2 - When the G51MP is running in the heating mode, the indoor blower will run on the heating speed.

3 - When there is a cooling demand, the indoor blower will run on the cooling speed.

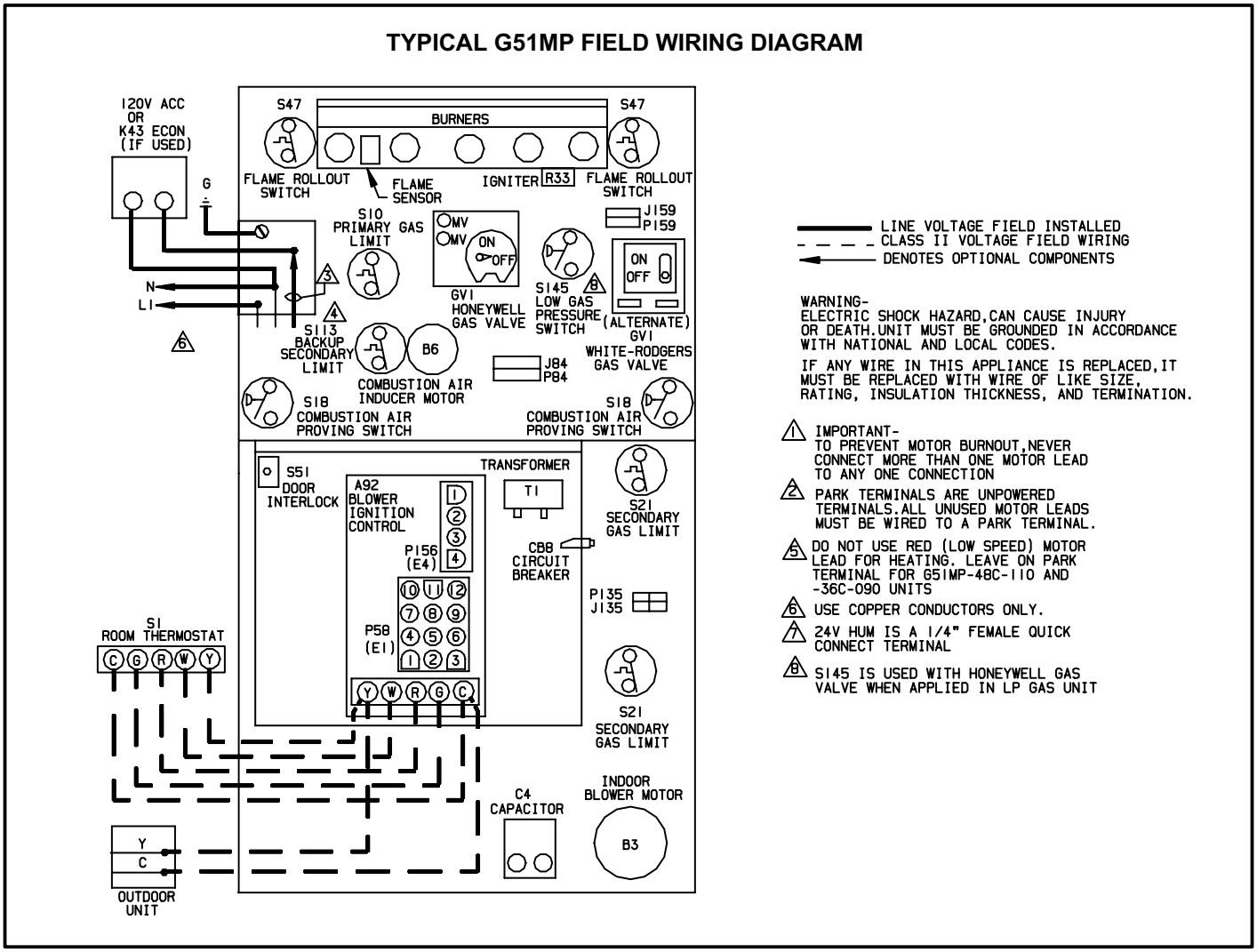

FIGURE 55

SURELIGHT® INTEGRATED CONTROL BOARD

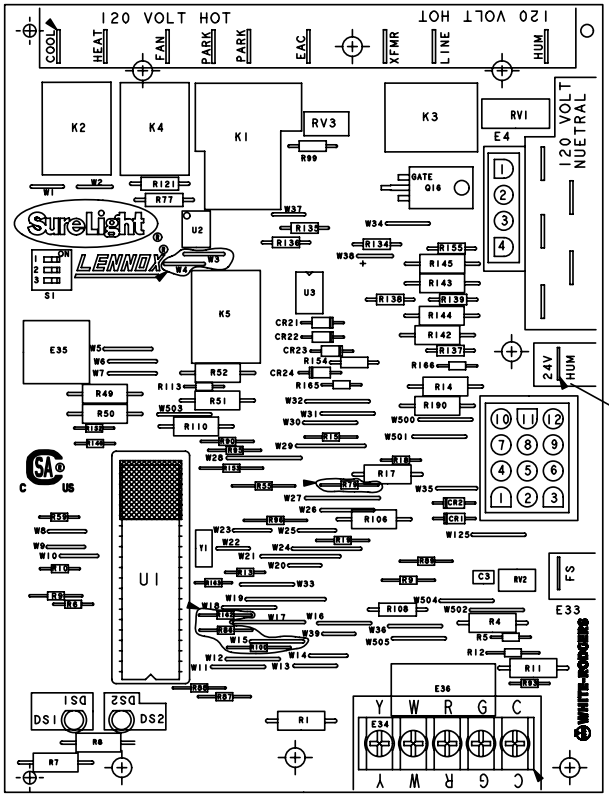

TERMINAL DESIGNATIONS	
COOL	Blower - Cooling Speed (120VAC)
HEAT	Blower - Heating Speed (120VAC)
PARK	Unused Blower (Not energized)
FAN	Continuous Low Blower Speed
EAC	Accessory Terminal (120VAC)
XFMR	Transformer (120VAC)
LINE	Input (120VAC)
HUM	Heat Only Accessory (120VAC)
5 Terminals	120 Volt Neutral
FS	Flame Sensor
24V HUM	Heat Only Accessory (24VAC)

1/4" FEMALE QUICK CONNECT

SI DIP SWITCHES		
HEAT OFF DELAY		
1	2	SEC
OFF	OFF	60
OFF	ON	90 *
ON	OFF	120
ON	ON	180
COOL OFF DELAY		
3		SEC
OFF		2 *
ON		45

**Factory setting*

FIGURE 56

TYPICAL G51MP WIRING DIAGRAM

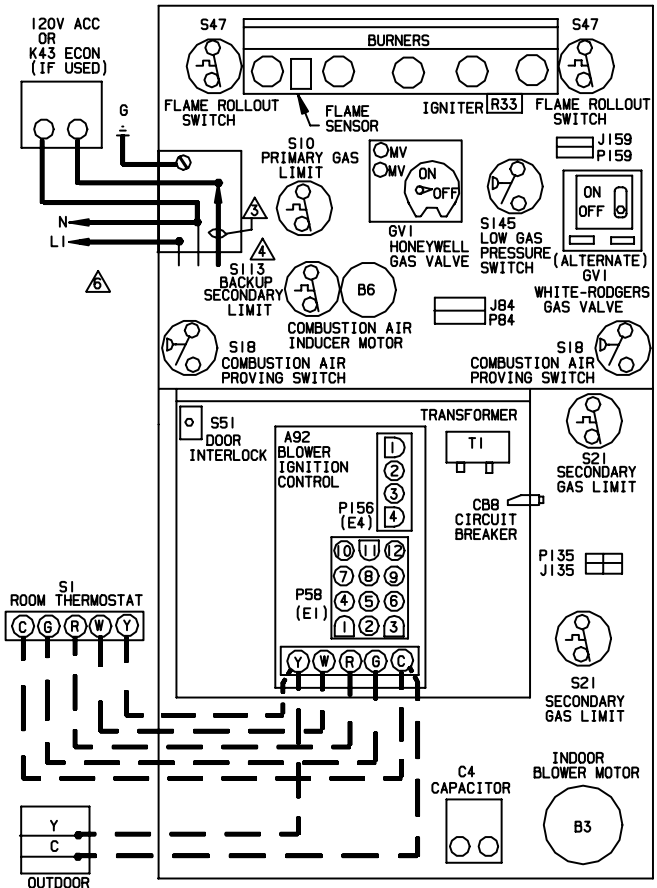

BLOWER SPEED CHART					
UNIT	FACTORY CONNECTED SPEED TAPS				MOTOR SPEEDS AVAIL.
	COOL	HEAT	FAN	PARK	
24B-045	BLACK	YELLOW	RED	BROWN	4
36B-045	BLACK	YELLOW	RED	BROWN	4
36B-070	BLACK	YELLOW	RED	BROWN	4
36C-090	BLACK	BROWN	RED	YELLOW	4
48C-090	BLACK	BROWN	RED	YELLOW	4
48C-110	BLACK	BROWN	RED	YELLOW	4
60C-090	BLACK	YELLOW	RED	BROWN	4
60C-110	BLACK	YELLOW	RED	BROWN	4
60D-135	BLACK	BROWN	RED	YELLOW	4
BLOWER SPEED SELECTION HI ← → LO					
SPEED TAPS	BLACK	BROWN	YELLOW	RED	4

THERMOSTAT HEAT ANTICIPATION SETTINGS

.65 AMP	HONEYWELL VALVE
.50 AMP	WHITE-RODGERS VALVE

	JACKPLUG CHART
J.P58	JACK/PLUG-BURNER CONTROL
J.P84	JACK/PLUG-COMB.AIR INDUCER
J.P135	JACK/PLUG-SECONDARY LIMIT
J.P156	JACK/PLUG-INDUCER/IGNITER
J.P159	JACK/PLUG-IGNITION

WARNING-
ELECTRIC SHOCK HAZARD,CAN CAUSE INJURY OR DEATH.UNIT MUST BE GROUNDED IN ACCORDANCE WITH NATIONAL AND LOCAL CODES.

IF ANY WIRE IN THIS APPLIANCE IS REPLACED,IT MUST BE REPLACED WITH WIRE OF LIKE SIZE, RATING, INSULATION THICKNESS, AND TERMINATION.

1. IMPORTANT- TO PREVENT MOTOR BURNOUT,NEVER CONNECT MORE THAN ONE MOTOR LEAD TO ANY ONE CONNECTION
2. PARK TERMINALS ARE UNPOWERED TERMINALS.ALL UNUSED MOTOR LEADS MUST BE WIRED TO A PARK TERMINAL.
5. DO NOT USE RED (LOW SPEED) MOTOR LEAD FOR HEATING. LEAVE ON PARK TERMINAL FOR G51MP-48C-110 AND -36C-090 UNITS
6. USE COPPER CONDUCTORS ONLY.
7. 24V HUM IS A 1/4" FEMALE QUICK CONNECT TERMINAL
8. S145 IS USED WITH HONEYWELL GAS VALVE WHEN APPLIED IN LP GAS UNIT
3. FIELD SUPPLIED ACC.WIRE.
4. S113 USED ON 090,110 AND 135 UNITS ONLY.

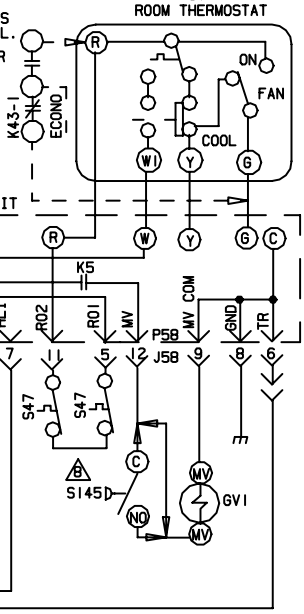

FIGURE 57

Unit Start-Up

FOR YOUR SAFETY READ BEFORE OPERATING

⚠WARNING

Do not use this furnace if any part has been underwater. A flood-damaged furnace is extremely dangerous. Attempts to use the furnace can result in fire or explosion. Immediately call a qualified service technician to inspect the furnace and to replace all gas controls, control system parts, and electrical parts that have been wet or to replace the furnace, if deemed necessary.

⚠WARNING

Danger of explosion. Can cause injury or product or property damage. Should the gas supply fail to shut off or if overheating occurs, shut off the gas valve to the furnace before shutting off the electrical supply.

⚠CAUTION

Before attempting to perform any service or maintenance, turn the electrical power to unit OFF at disconnect switch.

Priming Condensate Trap

The condensate trap should be primed with water prior to start-up to ensure proper condensate drainage. Either pour 10 fl. oz. (300 ml) of water into the trap, or follow these steps to prime the trap:

1 - Follow the lighting instructions to place the unit into operation.

2 - Set the thermostat to initiate a heating demand.

3 - Allow the burners to fire for approximately 3 minutes.

4 - Adjust the thermostat to deactivate the heating demand.

5 - Wait for the combustion air inducer to stop. Set the thermostat to initiate a heating demand and again allow the burners to fire for approximately 3 minutes.

6 - Adjust the thermostat to deactivate the heating demand and again wait for the combustion air inducer to stop. At this point, the trap should be primed with sufficient water to ensure proper condensate drain operation.

BEFORE LIGHTING the unit, smell all around the furnace area for gas. Be sure to smell next to the floor because some gas is heavier than air and will settle on the floor.

The gas valve on the G51MP may be equipped with either a gas control lever or gas control knob. Use only your hand to push the lever or turn the gas control knob. Never use tools. If the the lever will not move or the knob will not push in or turn by hand, do not try to repair it. Call a qualified service technician. Force or attempted repair may result in a fire or explosion.

Placing the furnace into operation:

G51MP units are equipped with a SureLight® ignition system. Do not attempt to manually light burners on this furnace. Each time the thermostat calls for heat, the burners will automatically light. The ignitor does not get hot when there is no call for heat on units with SureLight® ignition system.

⚠WARNING

If you do not follow these instructions exactly, a fire or explosion may result causing property damage, personal injury or death.

Gas Valve Operation (Figures 58 and 60)

1 - **STOP**! Read the safety information at the beginning of this section.

2 - Set the thermostat to the lowest setting.

3 - Turn off all electrical power to the unit.

4 - This furnace is equipped with an ignition device which automatically lights the burners. Do **not** try to light the burners by hand.

5 - Remove the upper access panel.

6 - *White Rodgers 36G Gas Valve or HoneywellVR8205 Gas Valve with ON/OFF Lever* - Switch gas valve lever to **OFF**. See figure 58 for the White Rodgers 36G valve. See figure 59 for the *HoneywellVR8205* valve. *Honeywell VR8205 Gas Valve with Knob* - Turn knob on gas valve clockwise ↷ to **OFF**. Do not force. See figure 60.

7 - Wait five minutes to clear out any gas. If you then smell gas, STOP! Immediately call your gas supplier from a neighbor's phone. Follow the gas supplier's instructions. If you do not smell gas go to next step.

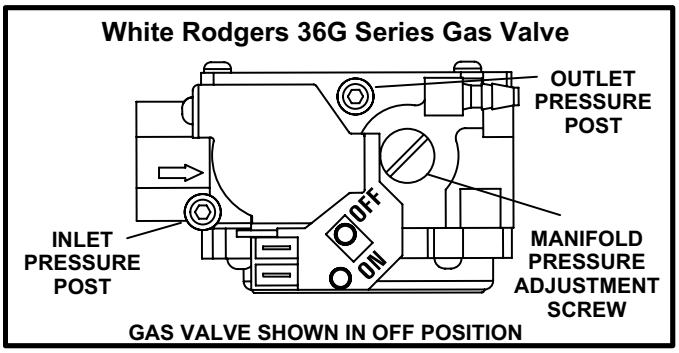

FIGURE 58

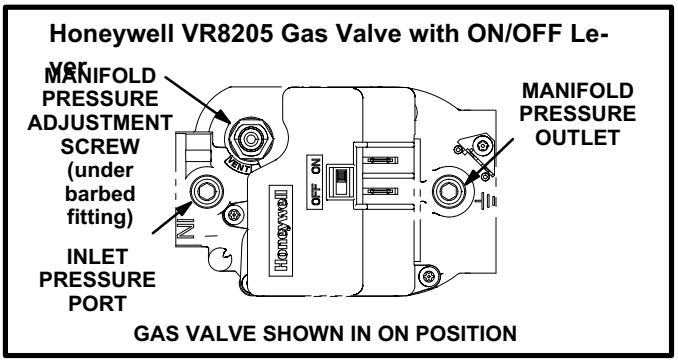

FIGURE 59

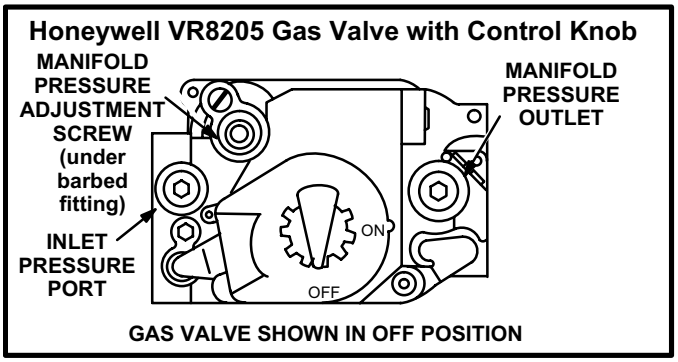

FIGURE 60

8 - *White Rodgers 36G Gas Valve or HoneywellVR8205 Gas Valve with ON/OFF Lever* - Switch gas valve lever to **ON**. See figure 58 for the White Rodgers 36G valve. See figure 59 for the *HoneywellVR8205* valve.
Honeywell VR8205 Gas Valve with Knob - Turn knob on gas valve counterclockwise to **ON**. Do not force. See figure 60.

9 - Replace the upper access panel.

10- Turn on all electrical power to to the unit.

11- Set the thermostat to desired setting.

NOTE - When unit is initially started, steps 1 through 11 may need to be repeated to purge air from gas line.

12- If the appliance will not operate, follow the instructions "Turning Off Gas to Unit" and call your service technician or gas supplier.

Turning Off Gas to Unit

1 - Set the thermostat to the lowest setting.

2 - Turn off all electrical power to the unit if service is to be performed.

3 - Remove the upper access panel.

4 - *White Rodgers 36G Gas Valve or HoneywellVR8205 Gas Valve with ON/OFF Lever* - Switch gas valve lever to **OFF**.
Honeywell VR8205 Gas Valve with Knob - Turn knob on gas valve clockwise to **OFF**. Do not force.

5 - Replace the upper access panel.

Heating Sequence Of Operation

1 - When thermostat calls for heat, combustion air inducer starts.

2 - Combustion air pressure switch proves blower operation. Switch is factory set and requires no adjustment.

3 - After a 15-second prepurge, the hot surface ignitor energizes.

4 - After a 20-second ignitor warm-up period, the gas valve solenoid opens.

5 - Gas is ignited, flame sensor proves the flame, and the combustion process continues.

6 - If flame is not detected after first ignition trial, the ignition control will repeat steps 3 and 4 four more times before locking out the gas valve ("WATCHGUARD" flame failure mode). The ignition control will then automatically repeat steps 1 through 6 after 60 minutes.

7 - To interrupt the 60-minute "WATCHGUARD" period, move thermostat from "Heat" to "OFF" then back to "Heat". Heating sequence then restarts at step 1.

Gas Pressure Adjustment

Gas Flow (Approximate)

1 - Operate unit at least 15 minutes before checking gas flow. Determine the time in seconds for one revolutions of gas through the meter. A portable LP gas meter (17Y44) is available for LP applications.

2 - Compare the number of seconds and the gas meter size in table 10 to determine the gas flow rate. Multiply the gas flow rate by the heating value to determine the unit input rate. If manifold pressure is correct and the unit input rate is incorrect, check gas orifices for proper size and restriction.

3 - Remove temporary gas meter if installed.

NOTE - To obtain accurate reading, shut off all other gas appliances connected to meter.

TABLE 10

Gas Flow Rate (Ft.^{3}/Hr.)		
Seconds for 1 Revolution	Gas Meter Size	
	1/2 cu ft Dial	1 cu ft Dial
10	180	360
12	150	300
14	129	257
16	113	225
18	100	200
20	90	180
22	82	164
24	75	150
26	69	138
28	64	129
30	60	120
32	56	113
34	53	106
36	50	100
38	47	95
40	45	90
42	43	86
44	41	82
46	39	78
48	38	75
50	36	72
52	35	69
54	33	67
56	32	64
58	31	62
60	30	60

Gas Pressure

1 - Check the gas line pressure with the unit firing at maximum rate. A minimum of 4.5 in. w.c. for natural gas or 11.0 in. w.c. for LP/propane gas should be maintained.

2 - After the line pressure has been checked and adjusted, check the regulator pressure. A natural gas to LP/propane gas changeover kit is required to convert the unit. Manifold pressures are given in table 11. See figures 58, 59 and 60 for the location of the manifold pressure adjustment screws.

⚠IMPORTANT

The White Rodgers 36G gas valve (figure 58) is equipped with pressure posts for measuring supply and manifold pressures. The posts provide built-in hose connections and have an integral 3/32" Allen-head screw. Rotate the screw counterclockwise one full turn to permit pressure measurement. Reseat the screw (rotate one full turn clockwise) after measurements have been taken to prevent gas leakage.

High Altitude Information

NOTE - In Canada, certification for installations at elevations over 4500 feet (1372 m) is the jurisdiction of local authorities.

The manifold pressure may require adjustment to ensure proper operation at higher altitudes. Refer to table 11 for proper manifold pressure settings at varying altitudes. Table 12 lists required pressure switch changes and conversion kits at varying altitudes.

The combustion air pressure switches are factory-set and require no adjustment.

TABLE 11
Manifold Pressure (Outlet) inches w.c.

Fuel	Model Input Sizes	Altitude (feet)				
		0-4500	4501-5500	5501-6500	6501-7500	7501-10,000
Nat. Gas	All sizes	3.5	3.5	3.5	3.5	3.5*
L.P. Gas	All sizes	10.0**	10.0**	10.0**	10.0**	10.0**

**Conversion kit required for applications at altitudes above 7501 ft. above sea level.*
***Conversion kit required for applications at all altitudes.*

NOTE - A natural to L.P. propane gas changeover kit is necessary to convert this unit. Refer to the changeover kit installation instruction for the conversion procedure.

TABLE 12
Conversion Kit and Pressure Switch Requirements at Varying Altitudes

Model Input Size	Gas	Altitude					
		0 - 4500 ft. (0 - 1372 m)		4,501 - 7500 ft. (1373 - 2286 m)		7501-10,000 ft. (2287 - 3048 m)	
		Required Conversion Kit	Pressure Switch	Required Conversion Kit	Pressure Switch	Required Conversion Kit	Pressure Switch
-045	Nat.	N/A	No Change	N/A	No Change	59M16	95M22
	LPG	83M74	No Change	83M74	No Change	83M75	95M22
-070	Nat.	N/A	No Change	N/A	56M05	59M16	56M06
	LPG	83M74	No Change	83M74	56M05	83M75	56M06
-090	Nat.	N/A	No Change	N/A	75M20	59M16	56M07
	LPG	83M74	No Change	83M74	75M20	83M75	56M07
-110	Nat.	N/A	No Change	N/A	75M20	59M16	56M07
	LPG	83M74	No Change	83M74	75M20	83M75	56M07
-135	Nat.	N/A	No Change	N/A	56M04	59M16	60M35
	LPG	83M74	No Change	83M74	56M04	83M75	60M35

Pressure switch is factory set. No adjustment necessary. All models use the factory installed pressure switch from 0-4500 feet (0-1370 m).

Other Unit Adjustments

Primary and Secondary Limits

The primary limit is located on the heating compartment vestibule panel. The secondary limits are located in the blower compartment, attached to the back side of the blower. These limits are factory set and require no adjustment.

Flame Rollout Switches (Two)

These manually reset switches are located on the burner box. If tripped, check for adequate combustion air before resetting.

Pressure Switches (Two)

The pressure switches are located in the heating compartment on the combustion air inducer. These switches check for proper combustion air inducer operation before allowing ignition trial. The switches are factory-set and require no adjustment.

Temperature Rise

After the furnace has been started and supply and return air temperatures have been allowed to stabilize, check the temperature rise. If necessary, adjust the blower speed to maintain the temperature rise within the range shown on the unit nameplate. Increase the blower speed to decrease the temperature. Decrease the blower speed to increase the temperature rise. Failure to adjust the temperature rise may cause erratic limit operation.

Fan Control

Heating Mode -- The fan on delay of 45 seconds is not adjustable. The fan off delay (amount of time that the blower operates after the heat demand has been satisfied) may be adjusted by setting S1 switches 1 and 2 located on the SureLight® control. The unit is shipped with a factory fan off setting of 90 seconds. The fan off delay affects comfort and is adjustable to satisfy individual applications. Adjust the fan off delay to achieve a supply air temperature between 90° and 110°F at the exact moment that the blower is de-energized. Longer off delay settings provide lower return air temperatures; shorter settings provide higher return air temperatures. See figure 56.

Cooling Mode -- The cooling mode fan off delay (amount of time that the blower operates after the cooling demand has been satisfied) may be adjusted by setting S1 switch 3 located on the SureLight® control. In the off position, the cooling fan off delay is 2 seconds. In the on position, the cooling fan off delay is 45 seconds. See figure 56.

Thermostat Heat Anticipation

Set the heat anticipator setting (if adjustable) according to the amp draw listed on the wiring diagram that is attached to the unit.

Electrical

1 - Check all wiring for loose connections.
2 - Check for the correct voltage at the furnace (furnace operating).
3 - Check amp-draw on the blower motor.
Motor Nameplate_____Actual_____

NOTE - Do not secure the electrical conduit directly to the air ducts or structure.

Blower Speeds

NOTE - CFM readings are taken external to unit with a dry evaporator coil and without accessories.

1 - Turn off electrical power to furnace.
2 - Remove blower access panel.
3 - Disconnect existing speed tap at control board speed terminal.

NOTE - Termination of any unused motor leads must be insulated.

4 - Refer to blower speed selection chart on unit wiring diagram for desired heating or cooling speed.
5 - Connect selected speed tap at control board speed terminal.
6 - Resecure blower access panel.
7 - Turn on electrical power to furnace.

Electronic Ignition

The SureLight® integrated control has an added feature of an internal Watchguard control. The feature serves as an automatic reset device for ignition control lockout caused by ignition failure. This type of lockout is usually due to low gas line pressure. After one hour of continuous thermostat demand for heat, the Watchguard will break and remake thermostat demand to the furnace and automatically reset the control to begin the ignition sequence.

Exhaust and Air Intake Pipe

1 - Check exhaust and air intake connections for tightness and to make sure there is no blockage.
2 - Are pressure switches closed? Obstructed exhaust pipe will cause unit to shut off at pressure switches. Check termination for blockages.
3 - Reset manual flame rollout switches on burner box cover.

Failure To Operate

If the unit fails to operate, check the following:

1 - Is the thermostat calling for heat?
2 - Are access panels securely in place?
3 - Is the main disconnect switch closed?
4 - Is there a blown fuse?
5 - Is the filter dirty or plugged? Dirty or plugged filters will cause the limit control to shut the unit off.
6 - Is gas turned on at the meter?
7 - Is the manual main shut-off valve open?
8 - Is the internal manual shut-off valve open?
9 - Is the unit ignition system in lock out? If the unit locks out again, call the service technician to inspect the unit for blockages.

Service

⚠ WARNING

ELECTRICAL SHOCK, FIRE, OR EXPLOSION HAZARD.

Failure to follow safety warnings exactly could result in dangerous operation, serious injury, death or property damage.
Improper servicing could result in dangerous operation, serious injury, death, or property damage.
Before servicing, disconnect all electrical power to furnace.
When servicing controls, label all wires prior to disconnecting. Take care to reconnect wires correctly. Verify proper operation after servicing.

At the beginning of each heating season, system should be checked as follows by a qualified service technician:

Blower

Check the blower wheel for debris and clean if necessary. The blower motors are prelubricated for extended bearing life. No further lubrication is needed.

⚠ WARNING

The blower access panel must be securely in place when the blower and burners are operating. Gas fumes, which could contain carbon monoxide, can be drawn into living space resulting in personal injury or death.

Filters

All G51MP filters are installed external to the unit. Filters should be inspected monthly. Clean or replace the filters when necessary to ensure proper furnace operation. Table 3 lists recommended filter sizes.

Exhaust and air intake pipes

Check the exhaust and air intake pipes and all connections for tightness and to make sure there is no blockage.

Electrical

1 - Check all wiring for loose connections.
2 - Check for the correct voltage at the furnace (furnace operating).
3 - Check amp-draw on the blower motor.
Motor Nameplate_____Actual_____

Winterizing and Condensate Trap Care

1 - Turn off power to the unit.
2 - Have a shallow pan ready to empty condensate water.
3 - Remove the drain plug from the condensate trap and empty water. Inspect the trap then reinstall the drain plug.

Cleaning Heat Exchanger

If cleaning the heat exchanger becomes necessary, follow the below procedures and refer to figure 1 when disassembling unit. Use papers or protective covering in front of furnace while removing heat exchanger assembly.

1 - Turn off electrical and gas supplies to the furnace.
2 - Remove the upper and lower furnace access panels.
3 - Mark all gas valve wires and disconnect them from valve.
4 - Remove gas supply line connected to gas valve. Remove gas valve/manifold assembly.
5 - Remove sensor wire from sensor. Disconnect 2-pin or 3-pin plug from the ignitor.
6 - Disconnect wires from flame roll-out switches.
7 - Remove burner box cover and remove four burner box screws at the vestibule panel and remove burner box. Set burner box assembly aside.
NOTE - If necessary, clean burners at this time. Follow procedures outlined in Burner Cleaning section.
8 - Loosen three clamps and remove flexible exhaust tee.
9 - Remove 3/8 inch rubber cap from condensate drain plug and drain. Replace cap after draining.
10 - Disconnect condensate drain line from the condensate trap. Remove condensate trap (it may be necessary to cut drain pipe). Remove screws that secure condensate collars to either side of the furnace and remove collars. Remove drain tubes from cold end header collector box.
11 - Disconnect condensate drain tubing from flue collar. Remove screws that secure both flue collars into place. Remove flue collars. It may be necessary to cut the exiting exhaust pipe for removal of the fittings.
12 - Disconnect the 2-pin plug from the combustion air inducer. Disconnect the two wires to the secondary limit, if applicable. Remove four screws which secure combustion air inducer to collector box Remove combustion air inducer assembly. Remove ground wire from vest panel.
13 - Mark and disconnect all combustion air pressure tubing from cold end header collector box.
14 - Mark and remove wires from pressure switches. Remove pressure switches. Keep tubing attached to pressure switches.
15 - Remove electrical junction box from the side of the furnace.
16 - Mark and disconnect any remaining wiring to heating compartment components. Disengage strain relief bushing and pull wiring and bushing through the hole in the blower deck.
17 - Remove the primary limit from the vestibule panel.
18 - Remove two screws from the front cabinet flange at the blower deck. Spread cabinet sides slightly to allow clearance for removal of heat exchanger.

19 - Remove screws along vestibule sides and bottom which secure vestibule panel and heat exchanger assembly to cabinet. Remove two screws from blower rail which secure bottom heat exchanger flange. Remove heat exchanger from furnace cabinet.

20 - Back wash heat exchanger with soapy water solution or steam. **If steam is used it must be below 275°F (135°C) .**

21 - Thoroughly rinse and drain the heat exchanger. Soap solutions can be corrosive. Take care to rinse entire assembly.

22 - Reinstall heat exchanger into cabinet making sure that the clamshells of the heat exchanger assembly are resting on the support located at the rear of the cabinet. Remove the indoor blower to view this area through the blower opening.

23 - Re-secure the supporting screws along the vestibule sides and bottom to the cabinet.

24 - Reinstall cabinet screws on front flange at blower deck.

25 - Reinstall the primary limit on the vestibule panel.

26 - Route heating component wiring through hole in blower deck and reinsert strain relief bushing.

27 - Reinstall pressure switches and reconnect pressure switch wiring.

28 - Carefully connect combustion air pressure switch hosing from pressure switches to proper stubs on cold end header collector box.

29 - Reinstall condensate collars on each side of the furnace. Reconnect drain tubing to collector box.

30 - Reinstall condensate trap on same side as exhaust pipe. Reconnect condensate drain line to the condensate trap.

31 - Reinstall electrical junction box.

32 - Reinstall the combustion air inducer. Reconnect the 2-pin or 3-pin plug to the wire harness. Reconnect the two wires to the secondary limit, if applicable.

33 - Use securing screws to reinstall flue collars to either side of the furnace. Reconnect exhaust piping and exhaust drain tubing.

34 - Replace flexible exhaust tee on combustion air inducer and flue collars. Secure using three existing hose clamps.

35 - Reinstall burner box assembly in vestibule area.

36 - Reconnect flame roll-out switch wires.

37 - Reconnect sensor wire and reconnect 2-pin plug from ignitor.

38 - Secure burner box assembly to vestibule panel using four existing screws. **Make sure burners line up in center of burner ports.**

39 - Reinstall gas valve manifold assembly. Reconnect gas supply line to gas valve.

40 - Reinstall burner box cover.

41 - Reconnect wires to gas valve.

42 - Replace the blower compartment access panel.

43 - Refer to instruction on verifying gas and electrical connections when re-establishing supplies.

44 - Follow lighting instructions to light and operate furnace for 5 minutes to ensure that heat exchanger is clean and dry and that furnace is operating properly.

45 - Replace heating compartment access panel.

Cleaning the Burner Assembly

1 - Turn off electrical and gas power supplies to furnace. Remove upper and lower furnace access panels.

2 - Mark all gas valve wires and disconnect them from the valve.

3 - Disconnect the gas supply line from the gas valve. Remove gas valve/manifold assembly.

4 - Mark and disconnect sensor wire from the sensor. Disconnect 2-pin plug from the ignitor at the burner box.

5 - Remove burner box cover and remove four screws which secure burner box assembly to vest panel. Remove burner box from the unit.

6 - Use the soft brush attachment on a vacuum cleaner to gently clean the face of the burners. Visually inspect the inside of the burners and crossovers for any blockage caused by foreign matter. Remove any blockage.

7 - Reconnect the sensor wire and reconnect the 2-pin plug to the ignitor wiring harness.

8 - Reinstall the burner box assembly using the existing four screws. Make sure that the burners line up in the center of the burner ports.

9 - Reinstall the gas valve manifold assembly. Reconnect the gas supply line to the gas valve. Reinstall the burner box cover.

10 - Reconnect the gas valve wires to the gas valve.

11 - Replace the blower compartment access panel.

12 - Refer to instruction on verifying gas and electrical connections when re-establishing supplies.

13 - Follow lighting instructions to light and operate furnace for 5 minutes to ensure that heat exchanger is clean and dry and that furnace is operating properly.

14 - Replace heating compartment access panel.

Repair Parts List

The following repair parts are available through Lennox dealers. When ordering parts, include the complete furnace model number listed on the CSA nameplate -- Example: G51MP-24B-045-1.

Cabinet Parts

- Upper access panel
- Blower access panel
- Top cap

Control Panel Parts

- Transformer
- SureLight® integrated control board
- Door interlock switch
- Circuit breaker

Blower Parts

- Blower wheel
- Motor
- Motor mounting frame
- Motor capacitor
- Blower housing cutoff plate

Heating Parts

- Flame Sensor
- Heat exchanger assembly
- Gas manifold
- Combustion air inducer
- Gas valve
- Main burner cluster
- Main burner orifices
- Pressure switches
- Ignitor
- Primary limit control
- Secondary limit control
- Flame rollout switches
- Combustion air inducer auxiliary limit

Ignition Control Board Diagnostic Codes

DIAGNOSTIC CODES

Make sure to Identify LED'S Correctly.

Refer to Installation Instructions for control board layout.

DS1 (Red or Green)	DS2 (Green)	DESCRIPTION
SIMULTANEOUS SLOW FLASH	SIMULTANEOUS SLOW FLASH	Power on -- Normal operation. Also signaled during cooling and continuous fan.
SIMULTANEOUS FAST FLASH	SIMULTANEOUS FAST FLASH	Normal operation -- Signaled when heating demand initiated at thermostat.
SLOW FLASH	ON	Primary or secondary limit switch open. Limit must close within 3 minutes or unit goes into 1-hour Watchguard.
OFF	SLOW FLASH	Pressure switch open; OR: Blocked inlet/exhaust vent; OR: Condensate line blocked; OR: Pressure switch closed prior to activation of combustion air inducer.
ALTERNATING SLOW FLASH	ALTERNATING SLOW FLASH	Watchguard -- Burners failed to ignite, limit open longer than 3 minutes, or flame sense lost 5 times in one heating cycle.
SLOW FLASH	OFF	Flame sensed without gas valve energized.
ON	SLOW FLASH	Rollout switch open.
ON ON OFF	ON OFF ON	Circuit board failure or control wired incorrectly. Check 24-volt and 115-volt connections to board.
FAST FLASH	SLOW FLASH	Main power polarity reversed. Switch line and neutral. Improper main ground.
SLOW FLASH	FAST FLASH	Low flame signal. Check flame sensor.
ALTERNATING FAST FLASH	ALTERNATING FAST FLASH	The following conditions are sensed during the ignitor warm-up period only: 1) Improper main ground; 2) Broken ignitor; OR: Open ignitor circuit; 3) Line voltage below 75 volts.

NOTE - Slow flash rate equals 1 Hz (one flash per second). Fast flash rate equals 3 Hz (three flashes per second). Drop out flame sense current = 0.15 - 0.24 microAmps.

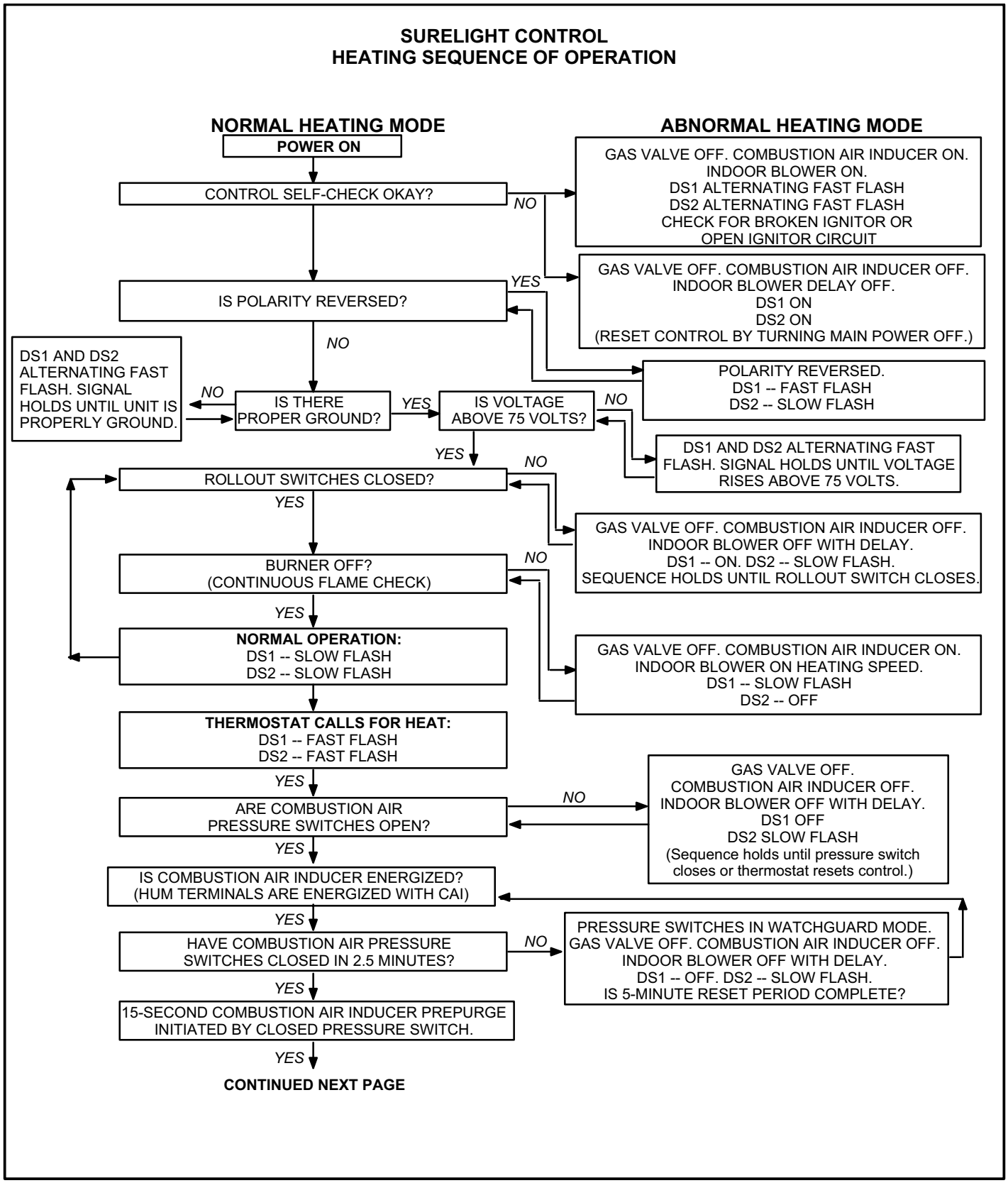
SURELIGHT CONTROL
HEATING SEQUENCE OF OPERATION
NORMAL HEATING MODE
ABNORMAL HEATING MODE
POWER ON
CONTROL SELF-CHECK OKAY?
NO
GAS VALVE OFF. COMBUSTION AIR INDUCER ON. INDOOR BLOWER ON. DS1 ALTERNATING FAST FLASH DS2 ALTERNATING FAST FLASH CHECK FOR BROKEN IGNITOR OR OPEN IGNITOR CIRCUIT
IS POLARITY REVERSED?
YES
GAS VALVE OFF. COMBUSTION AIR INDUCER OFF. INDOOR BLOWER DELAY OFF. DS1 ON DS2 ON (RESET CONTROL BY TURNING MAIN POWER OFF.)
NO
POLARITY REVERSED. DS1 -- FAST FLASH DS2 -- SLOW FLASH
DS1 AND DS2 ALTERNATING FAST FLASH. SIGNAL HOLDS UNTIL UNIT IS PROPERLY GROUND.
NO
IS THERE PROPER GROUND?
YES
IS VOLTAGE ABOVE 75 VOLTS?
NO
DS1 AND DS2 ALTERNATING FAST FLASH. SIGNAL HOLDS UNTIL VOLTAGE RISES ABOVE 75 VOLTS.
YES
ROLLOUT SWITCHES CLOSED?
NO
GAS VALVE OFF. COMBUSTION AIR INDUCER OFF. INDOOR BLOWER OFF WITH DELAY. DS1 -- ON. DS2 -- SLOW FLASH. SEQUENCE HOLDS UNTIL ROLLOUT SWITCH CLOSES.
YES
BURNER OFF? (CONTINUOUS FLAME CHECK)
NO
GAS VALVE OFF. COMBUSTION AIR INDUCER ON. INDOOR BLOWER ON HEATING SPEED. DS1 -- SLOW FLASH DS2 -- OFF
YES
NORMAL OPERATION: DS1 -- SLOW FLASH DS2 -- SLOW FLASH
THERMOSTAT CALLS FOR HEAT: DS1 -- FAST FLASH DS2 -- FAST FLASH
YES
ARE COMBUSTION AIR PRESSURE SWITCHES OPEN?
NO
GAS VALVE OFF. COMBUSTION AIR INDUCER OFF. INDOOR BLOWER OFF WITH DELAY. DS1 OFF DS2 SLOW FLASH (Sequence holds until pressure switch closes or thermostat resets control.)
YES
IS COMBUSTION AIR INDUCER ENERGIZED? (HUM TERMINALS ARE ENERGIZED WITH CAI)
YES
HAVE COMBUSTION AIR PRESSURE SWITCHES CLOSED IN 2.5 MINUTES?
NO
PRESSURE SWITCHES IN WATCHGUARD MODE. GAS VALVE OFF. COMBUSTION AIR INDUCER OFF. INDOOR BLOWER OFF WITH DELAY. DS1 -- OFF. DS2 -- SLOW FLASH. IS 5-MINUTE RESET PERIOD COMPLETE?
YES
15-SECOND COMBUSTION AIR INDUCER PREPURGE INITIATED BY CLOSED PRESSURE SWITCH.
YES
CONTINUED NEXT PAGE

SureLight® Troubleshooting: Heating Sequence of Operation (Continued)

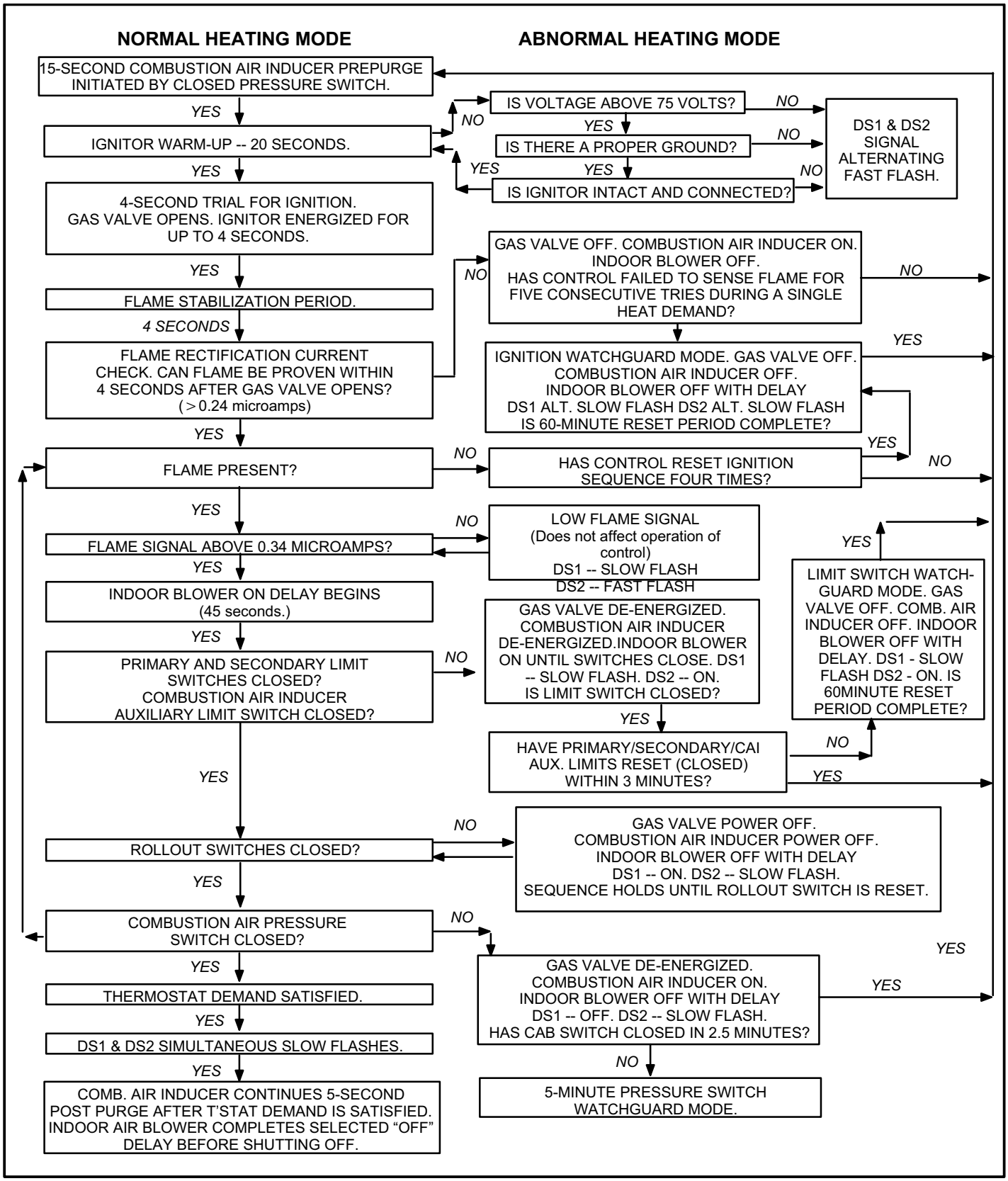

SureLight® Troubleshooting: Cooling Sequence of Operation

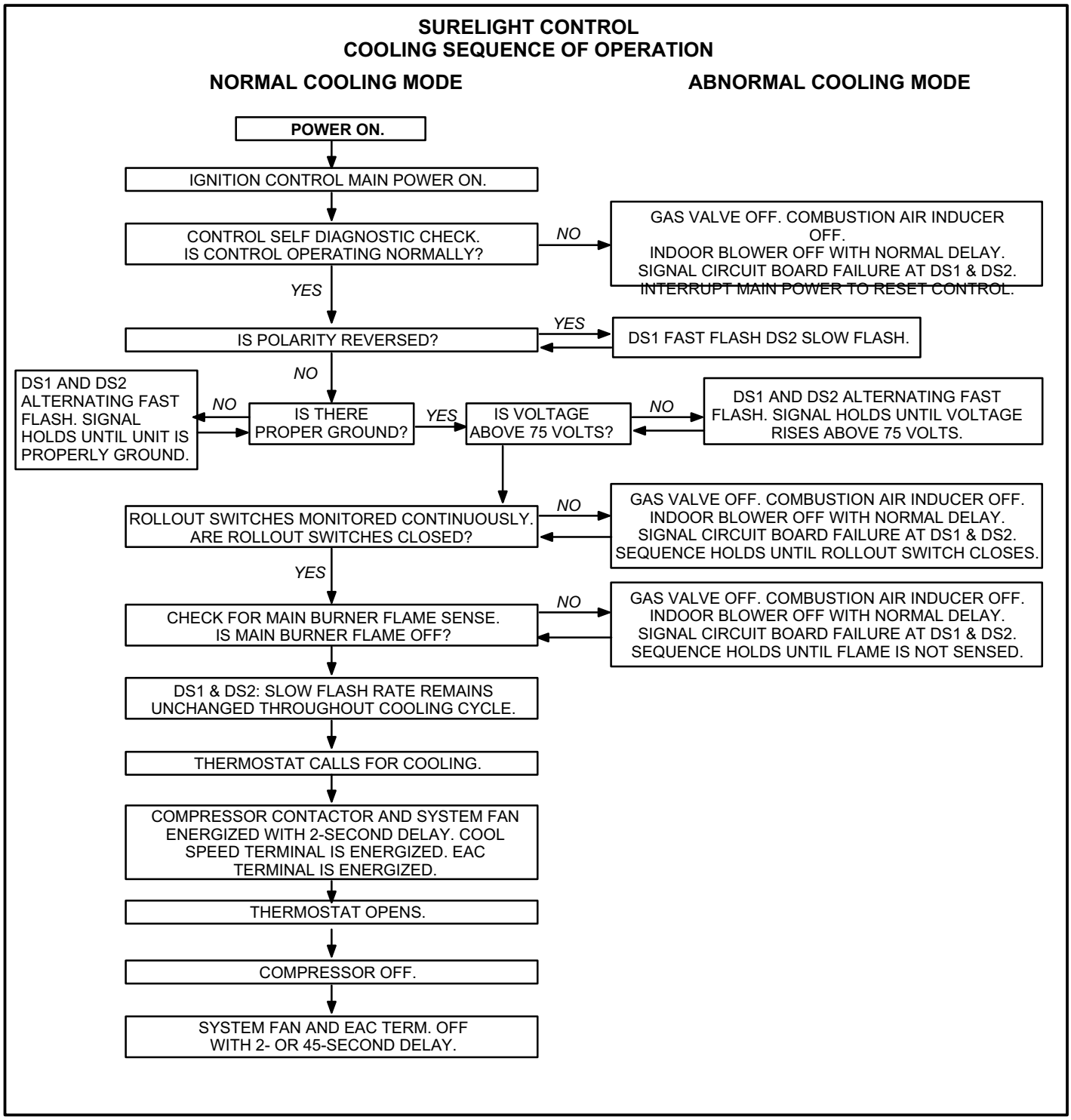

SureLight® Troubleshooting: Continuous Fan Sequence of Operation

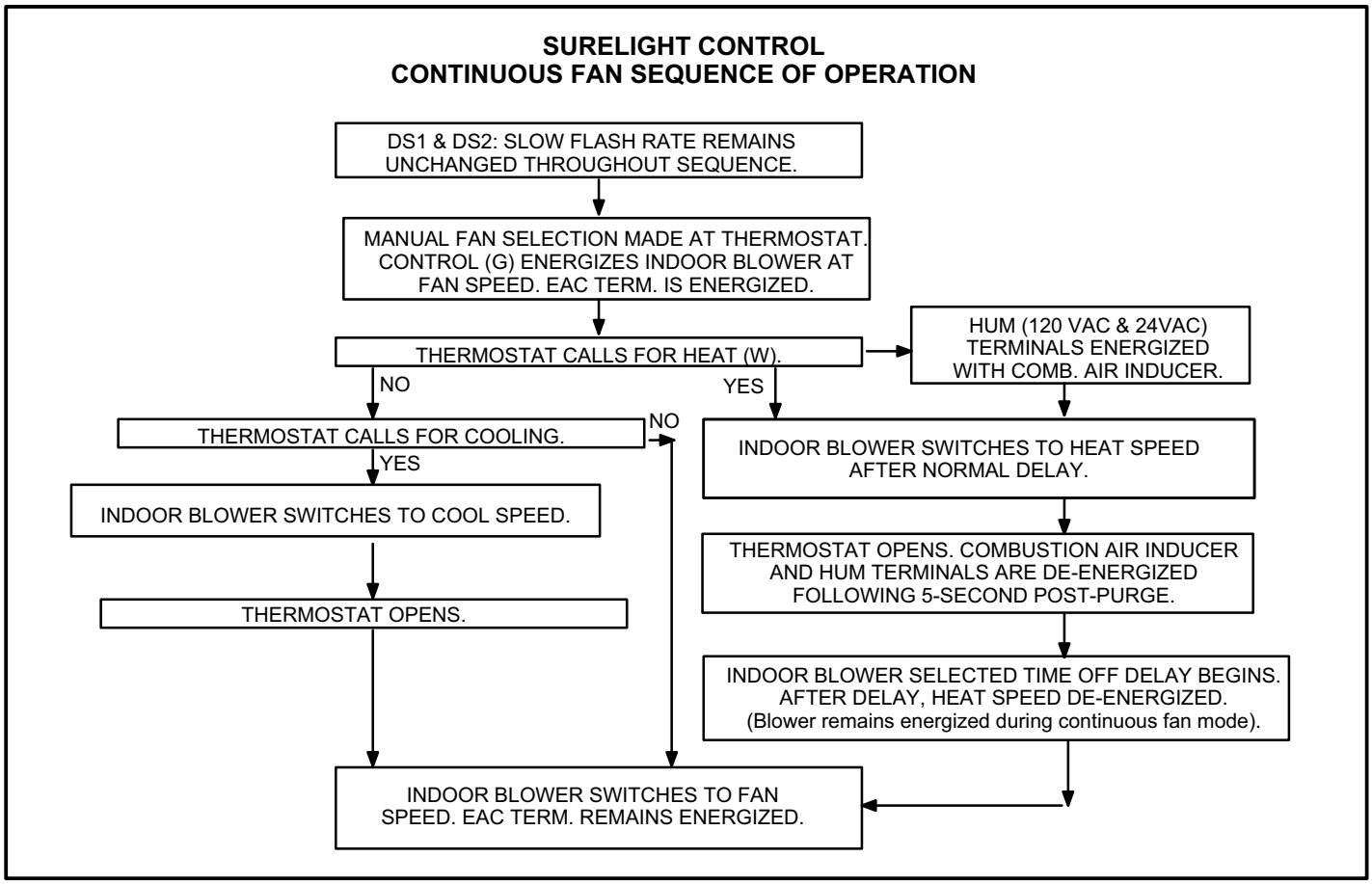

Vent Pipe Sizing Worksheet

Step 1	**Proposed vent pipe size : _____**	**Equivalent Feet**
Step 2	**Termination kit catalog number : _____** **Vent pipe equivalency value from table 5 : _____**	
Step 3	**Total number of 90° elbows required (indoors and outdoors)** **_____ X 5 = _____ equivalent feet of pipe**	
Step 4	**Total number of 45° elbows required (indoors and outdoors)** **_____ X 2.5 = _____ equivalent feet of pipe**	
Step 5	**Linear feet of straight pipe required : _____**	
Step 6	**Add equivalent feet of vent pipe listed in steps 2 through 5.**	**TOTAL**

If the total is equal to, or less than, the allowable maximum given in table 7, the proposed pipe size is acceptable. If the total exceeds the maximum allowed vent pipe length, repeat the process above using the next larger diameter pipe until an acceptable total is achieved.

NOTE - In Direct Vent systems, total the equivalent length of either the exhaust OR intake piping run, depending upon which will be LONGER. Intake and exhaust pipe diameter must be the same size and must be terminated in the same pressure zone. Intake and exhaust pipe should be roughly the same length.

G51MP Start-Up & Performance Check List

Job Name _____ Job No. _____ Date _____

Job Location _____ City _____ State _____

Installer _____ City _____ State _____

Unit Model No. _____ Technician _____

Serial No. _____

Heating Section

Electrical Connections Tight? ☐

Supply Voltage _____ Blower Motor H.P. _____

Blower Motor Amps ☐ Gas Piping Connections Tight & Leak-Tested? ☐

Fuel Type: Natural Gas? ☐ LP/Propane Gas? ☐

Furnace Btu Input _____

Line Pressure _____

Regulator Pressure ____ w.c. - Nat.: _____ w.c. - LP/Propane

Flue Connections Tight? ☐ Proper Draft? ☐

Condensate Connections Tight? ☐

Combustion Gas Tested? ☐ CO_2 ☐ CO

Fan Control Setting (45 Seconds Fixed On) _____

Fan Control Off Setting _____ Temperature Rise _____

Filter Clean & Secure? ☐ Vent Clear? ☐

Thermostat

Calibrated? ☐ Heat Anticipator Properly Set? ☐ Level? ☐

AIR CONDITIONERS

13ACX

MERIT® SERIES

R-410A

ENGINEERING DATA

Bulletin No. 210451
June 2008
Supersedes January 2008

ENERGY STAR

SEER up to 14.0
1.5 to 5 Tons
Cooling Capacity - 18,000 to 62,500 Btuh

MODEL NUMBER IDENTIFICATION

13 AC X - 024 - 230 - 2

Nominal SEER

Unit Type
AC = Air Conditioner

Refrigerant
X = R-410A

Cooling Capacity - Tons
018 = 1.5
024 = 2
030 = 2.5
036 = 3
042 = 3.5
048 = 4
060 = 5

Voltage
230 = 208/230V-1phase-60hz

Minor Revision Number

CONTENTS

ARI Rating Tables . . . . . Pages 8 - 30
Indoor Coil / Air Handler Substitution . . . . . Page 7
Dimensions . . . . . Page 6
Electrical Data . . . . . Page 5
Features . . . . . Pages 2 - 4
Field Wiring . . . . . Page 4
Installation Clearances . . . . . Page 4
Model Number Identification . . . . . Page 1
Outdoor Sound Data . . . . . Page 7
Specifications . . . . . Page 5

EQUIPMENT WARRANTY

Compressor - limited warranty for **five years** in residential installations and five years in non-residential installations.
All other covered components - five years in residential installations and one year in non-residential installations.
Refer to Lennox Equipment Limited Warranty certificate included with unit for specific details.

APPROVALS

Certified in Accordance with the USE certification program, which is based on ARI Standard 210/240.
Sound rated in Lennox reverberant sound test room in Accordance with test conditions included in ARI Standard 270.
Tested in the Lennox Research Laboratory environmental test room.
Rated According to U.S. Department of Energy (DOE) test procedures.
Units and components within bonded for grounding to meet safety standards for servicing required by UL, NEC and CEC.
Units are UL listed and CSA certified.
ISO 9001 Registered Manufacturing Quality System.
ENERGY STAR® certified units are designed to use less energy, help save money on utility bills, and help protect the environment.

APPLICATIONS

SEER up to 14.0.
1.5 through 5 ton.
Single-phase power supply.
Vertical air discharge allows concealment behind shrubs at grade level or out of sight on a roof.
Matching add-on furnace indoor coils or air handlers provide a wide range of cooling capacities and applications. See ARI Ratings table.
See Indoor Coils and Air Handlers sections for data.
Units shipped completely factory assembled, piped and wired. Each unit test operated at the factory ensuring proper operation.
Installer must set air conditioner, connect refrigerant lines and make electrical connections to complete job.

For expanded ratings, see **www.lennoxdavenet.com**.

REFRIGERATION SYSTEM

Refrigerant
Non-chlorine, ozone friendly, R-410A.
Unit pre-charged with refrigerant.
See Specification table.

1 Condenser Fan
Direct drive fan moves large air volumes uniformly through entire condenser coil for high refrigerant cooling capacity.
Vertical air discharge minimizes operating sounds and eliminates damage to lawn and shrubs.
Fan motor has sleeve bearings and is inherently protected.
Motor totally enclosed for maximum protection from weather, dust and corrosion.
Rain shield on motor provides additional protection from moisture.
Louvered steel top fan guard furnished as standard.
Fan service access accomplished by removal of top panel.

2 Copper Tube/Enhanced Fin Coil
Lennox designed and fabricated coil.
Ripple-edged aluminum fins.
Copper tube construction.
Lanced fins provide maximum exposure of fin surface to air stream resulting in excellent heat transfer.
Fin collars grip tubing for maximum contact area.
Flared shoulder tubing connections/silver soldering construction.
Coil is factory tested under high pressure to ensure leakproof construction.
Entire coil is accessible for cleaning.
PVC coated steel wire coil guard furnished as standard.

REFRIGERATION SYSTEM - CONTINUED

Refrigerant Flow Control

Units applicable to expansion valve systems or RFC systems when matched with specific indoor coils.

RFCIV METERING SYSTEM

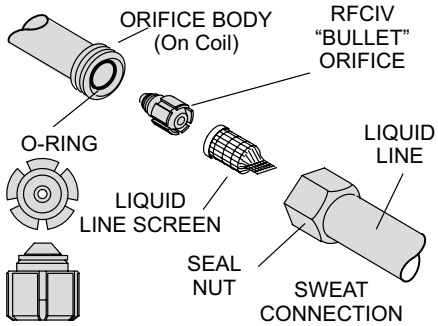

RFCIV:

Accurately meters refrigerant in system.

Refrigerant control is accomplished by exact sizing of refrigerant metering orifice.

The principle involves matching indoor coil with proper bore size of orifice in metering device.

Equalizes pressure shortly after compressor stops, unit starts unloaded, eliminating need for additional controls.

Furnished with air conditioner.

High Capacity Liquid Line Drier

Furnished with unit for field installation.

Approved for use with R-410A systems.

Traps any moisture or dirt that could contaminate the refrigerant system.

High Pressure Switch

Shuts off unit if abnormal operating conditions cause the discharge pressure to rise above setting.

Protects compressor from excessive condensing pressure.

Manual reset.

OPTIONS

Expansion Valve Kits

Must be ordered extra and field installed on certain indoor units. See ARI Ratings tables.

Chatleff-style fittings.

Freezestat

Installs on or near the vapor line of the indoor coil or on the suction line.

Senses suction line temperature and cycles the compressor off when suction line temperature falls below it's setpoint.

Opens at 29°F and closes at 58°F.

Loss of Charge Switch Kit

Helps protect the compressor from damage due low refrigerant charge conditions.

SPST, normally-closed switch, automatic reset switch mounted on suction line.

Refrigerant Line Kits

Refrigerant lines (suction & liquid) are shipped refrigeration clean. Lines are cleaned, dried, pressurized and sealed at factory.

Suction line fully insulated.

Lines are stubbed at both ends.

Not available for -060 models and must be field fabricated.

COMPRESSOR

❸ Scroll Compressor

Compressor features high efficiency with uniform suction flow, constant discharge flow and high volumetric efficiency and quiet operation.

Compressor consists of two involute spiral scrolls matched together to generate a series of crescent shaped gas pockets between them.

During compression, one scroll remains stationary while the other scroll orbits around it.

Gas is drawn into the outer pocket, the pocket is sealed as the scroll rotates.

As the spiral movement continues, gas pockets are pushed to the center of the scrolls. Volume between the pockets is simultaneously reduced.

When pocket reaches the center, gas is now at high pressure and is forced out of a port located in the center of the fixed scrolls.

During compression, several pockets are compressed simultaneously resulting in a smooth continuous compression cycle.

Continuous flank contact, maintained by centrifugal force, minimizes gas leakage and maximizes efficiency.

Scroll compressor is tolerant to the effects of slugging and contaminants. If this occurs, scrolls separate, allowing liquid or contaminants to to be worked toward the center and discharged.

Low gas pulses during compression reduces operational sound levels.

Compressor motor is internally protected from excessive current and temperature.

Compressor is installed in the unit on resilient rubber mounts for vibration free operation.

OPTIONS

Compressor Crankcase Heater

Protects against refrigerant migration that can occur during low ambient operation.

Compressor Sound Cover

A reinforced vinyl compressor cover containing a 1-1/2 inch thick batt of fiberglass insulation.

All open edges are sealed with a one-inch wide hook and loop fastening tape.

FEATURES

CONTROLS

OPTIONS

Compressor Hard Start Kit
Single-phase units are equipped with a PSC compressor motor. This type of motor normally doesn't need a potential relay and start capacitor.
In conditions such as low voltage, this kit may be required to increase the compressor starting torque.

Compressor Low Ambient Cut-Off
Non-adjustable switch (low ambient cut-out) prevents compressor operation when outdoor temperature is below 35°F.

Compressor Time-Off Control
Kit prevents compressor short-cycling and allows time for suction and discharge pressure to equalize.
Permits compressor start-up in an unloaded condition.
Automatic reset with 5 minute delay between compressor shut-off and start-up.

Indoor Blower Off Delay Relay
Delays the indoor blower-off time during the cooling cycle. See ARI Rating Tables for usage.

Low Ambient Kit
Air conditioners operate satisfactorily down to 45°F outdoor air temperature without any additional controls. Low Ambient Control Kit can be field installed, allowing unit operation down to 30°F.

Thermostat
Thermostat not furnished with unit. See Thermostat bulletins in Controls Section and Lennox Price Book.

Timed-Off Control
Kit prevents compressor short-cycling and allows time for suction and discharge pressure to equalize.
Permits compressor start-up in an unloaded condition.
Automatic reset with 5 minute delay between compressor shut-off and start-up.

❹ CABINET

Heavy gauge steel cabinet with five station metal wash process.
Powder paint finish provides superior rust and corrosion protection.
Painted base section.
Control box is conveniently located with all controls factory wired.
Corner patch plate allows access to compressor components.
Drainage holes are provided in base section for moisture removal.

❺ Refrigerant Line Connections, Electrical Inlets, Service Valves

Sweat connection suction and liquid lines are located on corner of unit cabinet.
Fully serviceable brass service valves prevent corrosion and provide access to refrigerant system. Suction valve can be fully shut off, while liquid valve may be front seated to manage refrigerant charge while servicing system.
Refrigerant line connections and field wiring inlets are located in one central area of cabinet for easy access. See dimension drawing.

OPTIONS

Hail Guards
Constructed of louvered, heavy-gauge steel painted to match cabinet.
Surrounds unit on all four sides to prevent damage to the coil.

Mounting Base
Provides permanent foundation for outdoor units.
High density polyethylene structural material is lightweight, sturdy, sound absorbing and will withstand the rigors of the sun, heat, cold, moisture, oil and refrigerant. Will not mildew or rot.
Can be shipped singly or in packages of 6 to a carton.

Unit Stand-Off Kit
Black high density polyethylene feet are available to raise unit off of mounting surface away from damaging moisture.
Four feet are furnished per order number.

FIELD WIRING

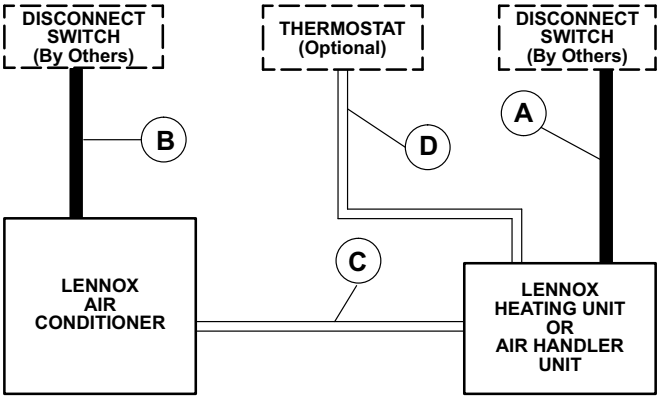

A — Two Wire Power
B — Two Wire Power — See Electrical Data
C — Two Wire Low Voltage — 18 ga. minimum
D — Four Wire Low Voltage (Electro-Mechanical) 18 ga. minimum
Five Wire Low Voltage (Electronic) 18 ga. minimum

NOTE — Field Wiring Not Furnished

All wiring must conform to NEC or CEC and local electrical codes.

INSTALLATION CLEARANCES - IN. (MM)

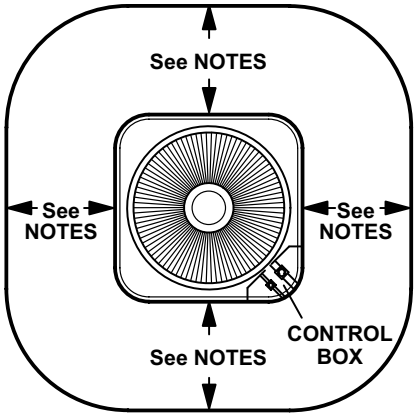

NOTES:
Service clearance of 30 in. (762 mm) must be maintained on one of the sides adjacent to the control box.

Clearance to one of the other three sides must be 36 in. (914 mm)

Clearance to one of the remaining two sides may be 12 in. (305 mm) and the final side may be 6 in. (152 mm).

A clearance of 24 in. must be maintained between two units.

48 in. (1219 mm) clearance required on top of unit.

SPECIFICATIONS

General Data	Model No.	13ACX-018	13ACX-024	13ACX-030	13ACX-036	13ACX-042	13ACX-048	13ACX-060
	Nominal Tonnage	1.5	2	2.5	3	3.5	4	5
Connections (sweat)	Liquid line o.d. - in.	3/8	3/8	3/8	3/8	3/8	3/8	3/8
	Suction line o.d. - in.	3/4	3/4	3/4	7/8	7/8	7/8	1-1/8
[1] Refrigerant (R-410A) furnished		3 lbs. 13 oz.	4 lbs. 6 oz.	4 lbs. 4 oz.	5 lbs. 9 oz.	6 lbs. 6 oz.	7 lbs. 8 oz.	10 lbs. 0 oz.
Outdoor Coil	Net face area - sq. ft. Outer coil	11.33	11.33	13.22	13.22	16.33	21.00	18.67
	Net face area - sq. ft. Inner coil	- - -	- - -	- - -	- - -	- - -	- - -	17.96
	Tube diameter - in.	5/16	5/16	5/16	5/16	5/16	5/16	5/16
	Number of rows	1	1	1	1	1	1	2
	Fins per inch	26	26	26	26	26	26	22
Outdoor Fan	Diameter - in.	18	18	18	18	22	22	22
	Number of blades	3	3	4	4	4	4	4
	Motor hp	1/10	1/10	1/5	1/5	1/4	1/4	1/4
	Cfm	2350	2350	2400	2400	3500	3670	3600
	Rpm	1010	1010	1090	1090	825	835	830
	Watts	165	165	185	185	300	295	285
Shipping Data - lbs. 1 package		122	123	133	135	178	194	218

ELECTRICAL DATA

	Line voltage data - 60 hz - 1ph	208/230V	208/230V	208/230V	208/230V	208/230V	208/230V	208/230V
	[2] Maximum overcurrent protection (amps)	20	30	30	35	40	50	60
	[3] Minimum circuit ampacity	12.0	17.5	18.7	21.9	24.1	28.9	34.5
Compressor	Rated load amps	9.0	13.4	14.1	16.6	17.9	21.8	26.2
	Power factor	.96	.97	.98	.98	.94	.95	.98
	Locked rotor amps	48	58	73	79	112	117	134
Condenser Fan Motor	Full load amps	0.7	0.7	1.1	1.1	1.7	1.7	1.7
	Locked rotor amps	1.4	1.4	2.0	2.0	3.1	3.1	3.1

OPTIONAL ACCESSORIES - MUST BE ORDERED EXTRA

Compressor Crankcase Heater	**93M04**	•	•	•	•			
	93M05					•	•	•
Compressor Hard Start Kit	**10J42**	•						
	88M91		•	•	•	•	•	•
Compressor Low Ambient Cut-Off	**45F08**	•	•	•	•	•	•	•
Compressor Sound Cover	**69J03**	•	•	•	•	•	•	•
Compressor Time-Off Control	**47J27**	•	•	•	•	•	•	•
Freezestat 3/8 in. tubing	**93G35**	•	•	•	•	•	•	•
5/8 in. tubing	**50A93**	•	•	•	•	•	•	•
Hail Guards	**92M87**	•	•					
	92M88			•	•			
	92M93					•		
	92M90						•	
	12W21							•
Indoor Blower Off Delay Relay	**58M81**	•	•	•	•	•	•	•
Loss of Charge Switch Kit	**84M23**	•	•	•	•	•	•	•
Low Ambient Kit	**34M72**	•	•	•	•	•	•	•
Mounting Base	**69J06**	•	•	•	•			
	69J07					•	•	•
Refrigerant Line Sets	L15-41-20, L15-41-30, L15-41-40, L15-41-50	•	•	•				
	L15-65-30, L15-65-40, L15-65-50				•	•	•	
	Field Fabricate							•
Unit Stand-Off Kit	**94J45**	•	•	•	•	•	•	•

NOTE — Extremes of operating range are plus 10% and minus 5% of line voltage.
[1] Refrigerant charge sufficient for 15 ft. length of refrigerant lines.
[2] HACR type circuit breaker or fuse.
[3] Refer to National or Canadian Electrical Code manual to determine wire, fuse and disconnect size requirements.

DIMENSIONS - INCHES (MM)

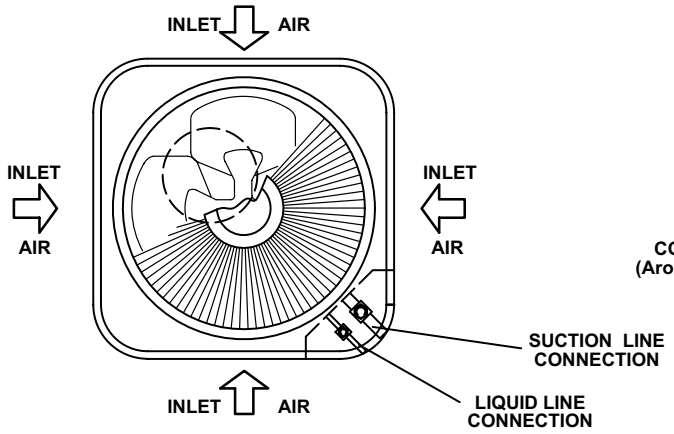

TOP VIEW

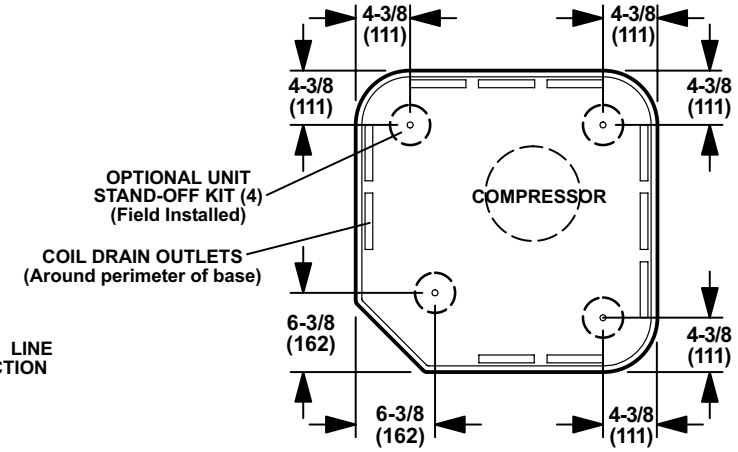

TOP VIEW BASE SECTION

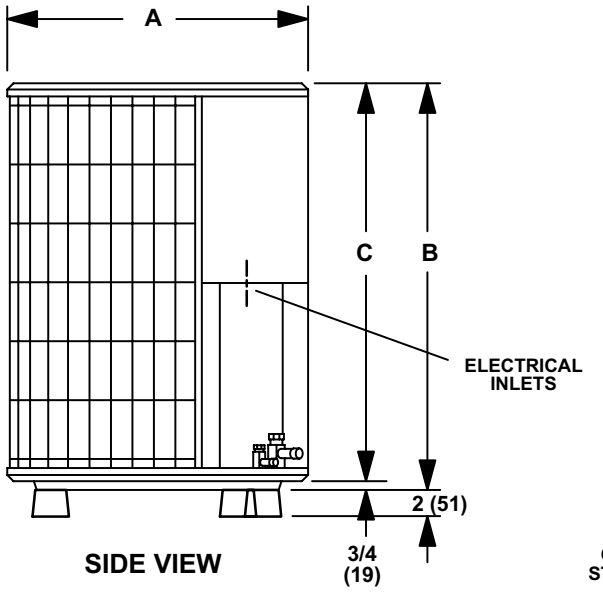

SIDE VIEW

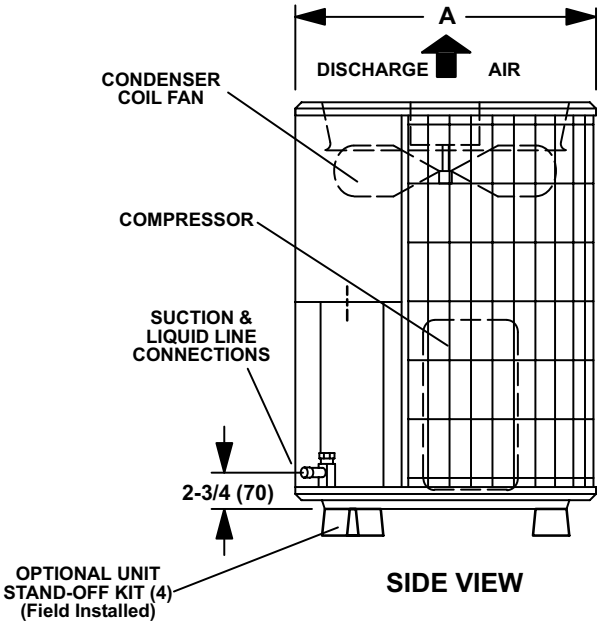

SIDE VIEW

Model No.	A		B		C	
	inches	mm	inches	mm	inches	mm
13ACX-018	24-1/4	616	25-1/4	641	24-1/4	616
13ACX-024	24-1/4	616	25-1/4	641	24-1/4	616
13ACX-030	24-1/4	616	29-1/4	743	28-1/2	724
13ACX-036	24-1/4	616	29-1/4	743	28-1/2	724
13ACX-042	28-1/4	718	29-1/4	743	28-1/2	724
13ACX-048	28-1/4	718	37-1/4	946	36-1/4	921
13ACX-060	28-1/4	718	33-1/4	845	32-1/2	826

OUTDOOR SOUND DATA

[1] Unit Model No.	Octave Band Sound Power Levels dBA, re 10^{-12} Watts Center Frequency - HZ							[1] Sound Rating Number (dB)
	125	250	500	1000	2000	4000	8000	
13ACX-018	53	60	64.5	68.5	67	61.5	54.5	76
13ACX-024	51.5	62	64.5	68.5	67	60.5	53.5	76
13ACX-030	52.5	62	67.5	69	67	61.5	54.5	76
13ACX-036	52.5	61	67	69	67	61.5	52.5	76
13ACX-042	58	68	73.5	75.5	74	69.5	62.5	79
13ACX-048	57.5	67	73	74.5	71	64	58.5	79
13ACX-060	57	63	69.5	71.5	71	65.5	60.5	79

NOTE - the octave sound power data does not include tonal correction.
[1] Tested according to ARI Standard 270-95 test conditions.

ARI RATINGS - INDOOR COIL / AIR HANDLER SUBSTITUTION

Substituting Coils in the ARI Tables

Most R-22 and R-410A indoor coils and air handlers are the same except for the factory installed expansion device. C33 coils can be used in place of the CX34 coils, CB26UH-R, CB27UH, and CB30M air handlers can be used in place of the CBX26UH, CBX27UH, and CBX32M, respectively.

The expansion device is based on the size of the outdoor unit. The factory installed RFC or TXV on the C33/CB26UH-R/CB27UH/CB30M must be replaced to correspond to the outdoor unit. The correct TXV's are:

1.5-3 ton air conditioners	**37L51**
3.5 ton air conditioners	**39L72**
4-5 ton air conditioners	**91M02**

Example:

A four-ton air conditioner is being installed. The ARI table shows that CBX32M-048 is a matching air handler. A CB30M-51 with a 91M02 TXV can be used in its place.

UP-FLOW COILS

R-410A		R-22
CX34-18/24A-6F	=	C33-24A-2
CX34-18/24B-6F	=	C33-24B-2
CX34-18/24C-6F	=	C33-24C-2
CX34-19A-6F	=	C33-19A-2
CX34-25A-6F	=	C33-25A-2
CX34-25B-6F	=	C33-25B-2
CX34-30A-6F	=	C33-30A-2
CX34-30B-6F	=	C33-30B-2
CX34-30C-6F	=	C33-30C-2
CX34-31A-6F	=	C33-31A-2
CX34-31B-6F	=	C33-31B-2
CX34-36A-6F	=	C33-36A-2
CX34-36B-6F	=	C33-36B-2
CX34-36C-6F	=	C33-36C-2
CX34-38A-6F	=	C33-38A-2
CX34-38B-6F	=	C33-38B-2
CX34-42B-6F	=	C33-42B-2
CX34-43B-6F	=	C33-43B-2
CX34-43C-6F	=	C33-43C-2
no equivalent		C33-44C-2
CX34-44/48B-6F	=	C33-48B-2
CX34-44/48C-6F	=	C33-48C-2
CX34-49C-6F	=	C33-49C-2
CX34-50/60C-6F	=	C33-50/60C-2
CX34-60D-6F	=	C33-60D-2
CX34-62C-6F	=	C33-62C-2
CX34-62D-6F	=	C33-62D-2

AIR HANDLERS

R-410A		R-22
CBX26UH-018	=	CB26UH-018-R
CBX26UH-024	=	CB26UH-024-R
CBX26UH-030	=	CB26UH-030-R
CBX26UH-036	=	CB26UH-036-R
CBX26UH-042	=	CB26UH-042-R
CBX26UH-048	=	CB26UH-048
CBX26UH-060	=	CB26UH-060-R
CBX27UH-018/024	=	CB27UH-018/024
CBX27UH-030	=	CB27UH-030
CBX27UH-036	=	CB27UH-036
CBX27UH-042	=	CB27UH-042
CBX27UH-048	=	CB27UH-048
CBX27UH-060	=	CB27UH-060
CBX32M-018/024	=	CB30M-21/26
CBX32M-030	=	CB30M-31
CBX32M-036	=	CB30M-41
CBX32M-042	=	CB30M-46
CBX32M-048	=	CB30M-51
CBX32M-060	=	CB30M-65
CBX32MV-all		no equivalent

ARI RATINGS

[1] ARI Standard 210/240 Ratings					
Cooling Capacity Btuh	Efficiency SEER	Efficiency EER	Total Unit Watts	Indoor Unit Model No.	Expansion Device
13ACX-018 WITH TXV					**1.5 TON**
Up-Flow Indoor Coils				**Up-Flow Coils**	
18,000	13.00	11.00	1635	[3, 5] CX34-18/24A-6F	Factory TXV
18,300	13.00	11.00	1665	[3] CX34-30A/B-6F	Factory TXV
18,400	13.00	11.00	1675	[3] CX34-19A-6F	Factory TXV
18,600	13.50	11.00	1690	[3] CX34-25A/B-6F	Factory TXV
18,900	13.00	11.50	1645	[3] CX34-31A/B-6F	Factory TXV
Down-Flow Indoor Coils				**Down-Flow Coils**	
18,100	13.00	11.00	1645	[3] CR33-18A-F	[2] **37L51**
18,500	13.50	11.00	1680	[3] CR33-24A/B-F	[2] **37L51**
18,700	13.50	11.50	1625	[3] CR33-30/36A/B/C-F	[2] **37L51**
Horizontal Indoor Coils				**Horizontal Coils**	
18,300	13.00	11.00	1665	[3] CH33-24/30A-2F	[2] **37L51**
18,400	13.00	11.00	1675	[3] CH33-19A-2F	[2] **37L51**
Air Handlers				**Air Handlers**	
18,600	13.50	11.50	1615	[3] CBX32M-018/024 (Multi-Position)	Factory TXV
18,700	14.00	11.50	1625	CBX26UH-18/24 (Up-Flow / Horizontal)	Factory TXV
19,100	14.00	12.00	1590	[3] CBX27UH-018 (Up-Flow / Horizontal)	Factory TXV
19,200	14.00	12.00	1600	[3] CBX27UH-024 (Up-Flow / Horizontal)	Factory TXV
19,300	14.00	12.00	1610	[3] CBX32M-030 (Multi-Position)	Factory TXV
13ACX-018 WITH RFC					**1.5 TON**
Up-Flow Indoor Coils				**Up-Flow Coils**	
18,300	13.00	11.00	1665	[3] C33-30A/B	[2] 0.051 (**10W93**)
18,400	13.00	11.00	1675	[3] C33-19A	[2] 0.051 (**10W93**)
18,500	13.50	11.00	1680	[3] C33-31A/B	[2] 0.051 (**10W93**)
18,800	13.00	11.50	1635	[3] C33-25A/B	[2] 0.051 (**10W93**)
Down-Flow Indoor Coils				**Down-Flow Coils**	
18,100	13.00	11.00	1645	[3] CR33-18A-F	[2] 0.051 (**10W93**)
18,500	13.00	11.00	1680	[3] CR33-30/36A/B/C-F	[2] 0.051 (**10W93**)
18,700	13.50	11.50	1625	[3] CR33-24A/B-F	[2] 0.051 (**10W93**)
Horizontal Indoor Coils				**Horizontal Coils**	
18,300	13.00	11.00	1665	[3] CH33-19A-2F	[2] 0.051 (**10W93**)
18,300	13.00	11.00	1665	[3] CH33-24/30A-2F	[2] 0.051 (**10W93**)
13ACX-024 WITH TXV					**2 TON**
Up-Flow Indoor Coils				**Up-Flow Coils**	
23,000	13.00	11.00	2090	[3,5] CX34-30A-6F	Factory TXV
23,200	13.00	11.00	2110	[3] CX34-19A-6F	Factory TXV
23,400	13.00	11.00	2125	[3] CX34-36A/B-6F	Factory TXV
23,400	13.00	11.00	2125	[3] CX34-25A/B-6F	Factory TXV
23,800	13.50	11.00	2165	[3] CX34-31A/B-6F	Factory TXV
24,000	13.50	11.50	2085	[3] CX34-38A/B-6F	Factory TXV

[1] Certified in accordance with USE certification program which is based on ARI Standard 210/240; 95°F outdoor air temperature, 80°F db / 67°F wb entering evaporator air with 25 ft. of connecting refrigerant lines.
[2] **Factory installed RFC or expansion valve on indoor unit MUST be replaced with expansion valve kit (ordered separately) or RFC (shipped with air conditioner) shown.**
[3] Blower must be capable of time-off blower delay. Indoor Blower Off Delay Relay (**58M81**) is recommended for field installation.
[4] Blower control must be set for a time-off blower delay.
[5] Most popular indoor coil.

ARI RATINGS

[1] ARI Standard 210/240 Ratings						
Cooling Capacity Btuh	Efficiency SEER	Efficiency EER	Total Unit Watts	Indoor Unit Model No.		Expansion Device
13ACX-024 WITH TXV						**2 TON**
Up-Flow Indoor Coils + Furnace				**Up-Flow Coils**	**+ Furnace**	
23,000	14.00	12.00	1900	CX34-18/24C-6F	[4] G61MPV-36C-090	Factory TXV
23,000	14.00	12.00	1900	CX34-18/24C-6F	[4] G71MPP-36C-090	Factory TXV
23,400	14.00	12.00	1950	CX34-30C-6F	[4] G61MPV-36C-090	Factory TXV
23,400	14.00	12.00	1950	CX34-30C-6F	[4] G71MPP-36C-090	Factory TXV
23,600	14.00	11.50	2050	CX34-19B-6F	[4] G61MPV-36B-045	Factory TXV
23,600	14.00	11.50	2050	CX34-30B-6F	[4] G61MPV-36B-045	Factory TXV
23,600	14.00	12.00	1965	CX34-19A-6F	[4] G60UHV-36A-070	Factory TXV
23,600	14.00	12.00	1965	CX34-19B-6F	[4] G60UHV-36B-090	Factory TXV
23,600	14.00	12.00	1965	CX34-19B-6F	[4] G61MPV-36B-070	Factory TXV
23,600	14.00	12.00	1965	CX34-19B-6F	[4] G71MPP-36B-070	Factory TXV
23,600	14.00	12.00	1965	CX34-30A-6F	[4] G60UHV-36A-070	Factory TXV
23,600	14.00	12.00	1965	CX34-30B-6F	[4] G60UHV-36B-090	Factory TXV
23,600	14.00	12.00	1965	CX34-30B-6F	[4] G61MPV-36B-070	Factory TXV
23,600	14.00	12.00	1965	CX34-30B-6F	[4] G71MPP-36B-070	Factory TXV
23,800	14.00	12.00	1985	CX34-25B-6F	[4] G61MPV-36B-070	Factory TXV
23,800	14.00	12.00	1985	CX34-25B-6F	[4] G71MPP-36B-070	Factory TXV
23,800	14.00	12.00	1985	CX34-36A-6F	[4] G60UHV-36A-070	Factory TXV
23,800	14.00	12.00	1985	CX34-36B-6F	[4] G60UHV-36B-090	Factory TXV
23,800	14.00	12.00	1985	CX34-36B-6F	[4] G61MPV-36B-045	Factory TXV
23,800	14.00	12.00	1985	CX34-36B-6F	[4] G61MPV-36B-070	Factory TXV
23,800	14.00	12.00	1985	CX34-36B-6F	[4] G71MPP-36B-070	Factory TXV
24,000	14.00	12.00	2000	CX34-25A-6F	[4] G60UHV-36A-070	Factory TXV
24,000	14.00	12.00	2000	CX34-25B-6F	[4] G60UHV-36B-090	Factory TXV
24,000	14.00	12.00	2000	CX34-25B-6F	[4] G61MPV-36B-045	Factory TXV
24,000	14.00	12.00	2000	CX34-36C-6F	[4] G61MPV-36C-090	Factory TXV
24,000	14.00	12.00	2000	CX34-36C-6F	[4] G71MPP-36C-090	Factory TXV
24,400	14.00	12.00	2035	CX34-31A-6F	[4] G60UHV-36A-070	Factory TXV
24,400	14.00	12.00	2035	CX34-31B-6F	[4] G60UHV-36B-090	Factory TXV
24,400	14.00	12.00	2035	CX34-31B-6F	[4] G61MPV-36B-045	Factory TXV
24,400	14.00	12.00	2035	CX34-31B-6F	[4] G61MPV-36B-070	Factory TXV
24,400	14.00	12.00	2035	CX34-31B-6F	[4] G71MPP-36B-070	Factory TXV
24,400	14.00	12.00	2035	CX34-38A-6F	[4] G60UHV-36A-070	Factory TXV
24,400	14.00	12.00	2035	CX34-38B-6F	[4] G60UHV-36B-090	Factory TXV
24,400	14.00	12.00	2035	CX34-38B-6F	[4] G61MPV-36B-045	Factory TXV
24,400	14.00	12.00	2035	CX34-38B-6F	[4] G61MPV-36B-070	Factory TXV
24,400	14.00	12.00	2035	CX34-38B-6F	[4] G71MPP-36B-070	Factory TXV
Down-Flow Indoor Coils				**Down-Flow Coils**		
23,200	13.00	11.00	2110	[3] CR33-24A/B-F		**[2] 37L51**
23,600	13.00	11.00	2145	[3] CR33-30/36A/B/C-F		**[2] 37L51**

[1] Certified in accordance with USE certification program which is based on ARI Standard 210/240; 95°F outdoor air temperature, 80°F db / 67°F wb entering evaporator air with 25 ft. of connecting refrigerant lines.

[2] **Factory installed RFC or expansion valve on indoor unit MUST be replaced with expansion valve kit (ordered separately) or RFC (shipped with air conditioner) shown.**

[3] Blower must be capable of time-off blower delay. Indoor Blower Off Delay Relay (**58M81**) is recommended for field installation.

[4] Blower control must be set for a time-off blower delay.

ARI RATINGS

[1] ARI Standard 210/240 Ratings						
Cooling Capacity Btuh	Efficiency SEER	Efficiency EER	Total Unit Watts	Indoor Unit Model No.		Expansion Device
13ACX-024 WITH TXV						**2 TON**
Down-Flow Indoor Coils + Furnace				**Down-Flow Coils**	**+ Furnace**	
23,800	14.00	12.00	1985	CR33-24B-F	[4] G61MPV-36B-045	[2] **37L51**
23,800	14.00	12.00	1985	CR33-24B-F	[4] G61MPV-36B-070	[2] **37L51**
23,800	14.00	12.00	1985	CR33-24B-F	[4] G71MPP-36B-070	[2] **37L51**
24,000	14.00	12.00	2000	CR33-30/36B-F	[4] G61MPV-36B-070	[2] **37L51**
24,000	14.00	12.00	2000	CR33-30/36B-F	[4] G71MPP-36B-070	[2] **37L51**
24,200	14.00	12.00	2015	CR33-30/36B-F	[4] G61MPV-36B-045	[2] **37L51**
24,200	14.00	12.00	2015	CR33-30/36C-F	[4] G61MPV-36C-090	[2] **37L51**
24,200	14.00	12.00	2015	CR33-30/36C-F	[4] G71MPP-36C-090	[2] **37L51**
Horizontal Indoor Coils				**Horizontal Coils**		
23,400	13.00	11.00	2125	[3] CH23-41		[2] **37L51**
23,400	13.00	11.00	2125	[3] CH33-36A/B/C-2F		[2] **37L51**
Horizontal Indoor Coils + Furnace				**Horizontal Coils**	**+ Furnace**	
23,800	14.00	12.00	1985	CH33-36A-2F	[4] G60UHV-36A-070	[2] **37L51**
23,800	14.00	12.00	1985	CH33-36B-2F	[4] G61MPV-36B-045	[2] **37L51**
23,800	14.00	12.00	1985	CH33-36B-2F	[4] G61MPV-36B-070	[2] **37L51**
23,800	14.00	12.00	1985	CH33-36B-2F	[4] G71MPP-36B-070	[2] **37L51**
24,000	14.00	12.00	2000	CH23-41	[4] G60UHV-36A-070	[2] **37L51**
24,000	14.00	12.00	2000	CH23-41	[4] G60UHV-36B-090	[2] **37L51**
24,000	14.00	12.00	2000	CH23-41	[4] G61MPV-36B-045	[2] **37L51**
24,000	14.00	12.00	2000	CH23-41	[4] G61MPV-36B-070	[2] **37L51**
24,000	14.00	12.00	2000	CH23-41	[4] G71MPP-36B-070	[2] **37L51**
24,000	14.00	12.00	2000	CH33-36B-2F	[4] G60UHV-36B-090	[2] **37L51**
24,200	14.00	12.00	2015	CH33-36C-2F	[4] G61MPV-36C-090	[2] **37L51**
24,200	14.00	12.00	2015	CH33-36C-2F	[4] G71MPP-36C-090	[2] **37L51**
Air Handlers				**Air Handlers**		
24,000	14.00	11.50	2085	CBX26UH-024 (Up-Flow / Horizontal)		Factory TXV
24,000	14.00	11.50	2085	[3] CBX32M-030 (Multi-Position)		Factory TXV
24,600	14.00	12.00	2050	[4] CBX32MV-036 (Multi-Position)		Factory TXV
25,200	14.00	12.00	2100	[3] CBX32M-036 (Multi-Position)		Factory TXV
13ACX-024 WITH RFC						**2 TON**
Up-Flow Indoor Coils				**Up-Flow Coils**		
23,000	13.00	11.00	2090	[3] C33-30A/B		[2] 0.057 (**97M75**)
23,000	13.00	11.00	2090	[3] C33-19A		[2] 0.057 (**97M75**)
23,200	13.00	11.00	2110	[3] C33-36A/B		[2] 0.057 (**97M75**)
23,200	13.00	11.00	2110	[3] C33-25A/B		[2] 0.057 (**97M75**)
23,800	13.50	11.00	2164	[3] C33-38A/B		[2] 0.057 (**97M75**)
23,800	13.50	11.00	2165	[3] C33-31A/B		[2] 0.057 (**97M75**)

[1] Certified in accordance with USE certification program which is based on ARI Standard 210/240; 95°F outdoor air temperature, 80°F db / 67°F wb entering evaporator air with 25 ft. of connecting refrigerant lines.

[2] **Factory installed RFC or expansion valve on indoor unit MUST be replaced with expansion valve kit (ordered separately) or RFC (shipped with air conditioner) shown.**

[3] Blower must be capable of time-off blower delay. Indoor Blower Off Delay Relay (**58M81**) is recommended for field installation.

[4] Blower control must be set for a time-off blower delay.

ARI RATINGS

[1] ARI Standard 210/240 Ratings						
Cooling Capacity Btuh	Efficiency SEER	Efficiency EER	Total Unit Watts	Indoor Unit Model No.		Expansion Device
13ACX-024 WITH RFC						**2 TON**
Up-Flow Indoor Coils + Furnace				**Up-Flow Coils**	**+ Furnace**	
23,400	14.00	11.50	2035	C33-19B	[4] G61MPV-36B-045	[2] 0.057 (**97M75**)
23,400	14.00	11.50	2035	C33-30B	[4] G61MPV-36B-045	[2] 0.057 (**97M75**)
23,400	14.00	12.00	1950	C33-19A	[4] G60UHV-36A-070	[2] 0.057 (**97M75**)
23,400	14.00	12.00	1950	C33-19B	[4] G61MPV-36B-070	[2] 0.057 (**97M75**)
23,400	14.00	12.00	1950	C33-19B	[4] G71MPP-36B-070	[2] 0.057 (**97M75**)
23,400	14.00	12.00	1950	C33-30A	[4] G60UHV-36A-070	[2] 0.057 (**97M75**)
23,400	14.00	12.00	1950	C33-30B	[4] G60UHV-36B-090	[2] 0.057 (**97M75**)
23,400	14.00	12.00	1950	C33-30B	[4] G61MPV-36B-070	[2] 0.057 (**97M75**)
23,400	14.00	12.00	1950	C33-30B	[4] G71MPP-36B-070	[2] 0.057 (**97M75**)
23,600	14.00	12.00	1965	C33-19B	[4] G60UHV-36B-090	[2] 0.057 (**97M75**)
23,800	14.00	12.00	1985	C33-25A	[4] G60UHV-36A-070	[2] 0.057 (**97M75**)
23,800	14.00	12.00	1985	C33-25B	[4] G60UHV-36B-090	[2] 0.057 (**97M75**)
23,800	14.00	12.00	1985	C33-25B	[4] G61MPV-36B-045	[2] 0.057 (**97M75**)
23,800	14.00	12.00	1985	C33-25B	[4] G61MPV-36B-070	[2] 0.057 (**97M75**)
23,800	14.00	12.00	1985	C33-25B	[4] G71MPP-36B-070	[2] 0.057 (**97M75**)
23,800	14.00	12.00	1985	C33-36A	[4] G60UHV-36A-070	[2] 0.057 (**97M75**)
23,800	14.00	12.00	1985	C33-36B	[4] G61MPV-36B-045	[2] 0.057 (**97M75**)
23,800	14.00	12.00	1985	C33-36B	[4] G61MPV-36B-070	[2] 0.057 (**97M75**)
23,800	14.00	12.00	1985	C33-36B	[4] G71MPP-36B-070	[2] 0.057 (**97M75**)
23,800	14.00	12.00	1985	C33-36B	[4] G60UHV-36B-090	[2] 0.057 (**97M75**)
24,200	14.00	12.00	2015	C33-31A	[4] G60UHV-36A-070	[2] 0.057 (**97M75**)
24,200	14.00	12.00	2015	C33-31B	[4] G61MPV-36B-045	[2] 0.057 (**97M75**)
24,200	14.00	12.00	2015	C33-31B	[4] G61MPV-36B-070	[2] 0.057 (**97M75**)
24,200	14.00	12.00	2015	C33-31B	[4] G71MPP-36B-070	[2] 0.057 (**97M75**)
24,400	14.00	12.00	2035	C33-31B	[4] G60UHV-36B-090	[2] 0.057 (**97M75**)
24,400	14.00	12.00	2035	C33-38A	[4] G60UHV-36A-070	[2] 0.057 (**97M75**)
24,400	14.00	12.00	2035	C33-38B	[4] G61MPV-36B-045	[2] 0.057 (**97M75**)
24,400	14.00	12.00	2035	C33-38B	[4] G61MPV-36B-070	[2] 0.057 (**97M75**)
24,400	14.00	12.00	2035	C33-38B	[4] G71MPP-36B-070	[2] 0.057 (**97M75**)
24,600	14.00	12.00	2050	C33-38B	[4] G60UHV-36B-090	[2] 0.057 (**97M75**)
Down-Flow Indoor Coils				**Down-Flow Coils**		
23,200	13.00	11.00	2110	[3] CR33-24A/B-F		[2] 0.057 (**97M75**)
23,600	13.00	11.00	2145	[3] CR33-30/36A/B/C-F		[2] 0.057 (**97M75**)
Down-Flow Indoor Coils + Furnace				**Down-Flow Coils**	**+ Furnace**	
23,600	14.00	12.00	1965	CR33-24B-F	[4] G61MPV-36B-070	[2] 0.057 (**97M75**)
23,600	14.00	12.00	1965	CR33-24B-F	[4] G71MPP-36B-070	[2] 0.057 (**97M75**)
23,800	14.00	12.00	1985	CR33-24B-F	[4] G61MPV-36B-045	[2] 0.057 (**97M75**)
24,000	14.00	12.00	2000	CR33-30/36A-F	[4] G61MPV-36B-070	[2] 0.057 (**97M75**)
24,000	14.00	12.00	2000	CR33-30/36A-F	[4] G71MPP-36B-070	[2] 0.057 (**97M75**)
24,000	14.00	12.00	2000	CR33-30/36B-F	[4] G61MPV-36B-045	[2] 0.057 (**97M75**)
24,600	14.00	12.00	2050	CR33-30/36B-F	[4] G60DFV-36B-090	[2] 0.057 (**97M75**)
Horizontal Indoor Coils				**Horizontal Coils**		
23,200	13.00	11.00	2110	[3] CH33-36A/B/C-2F		[2] 0.057 (**97M75**)

[1] Certified in accordance with USE certification program which is based on ARI Standard 210/240; 95°F outdoor air temperature, 80°F db / 67°F wb entering evaporator air with 25 ft. of connecting refrigerant lines.

[2] **Factory installed RFC or expansion valve on indoor unit MUST be replaced with expansion valve kit (ordered separately) or RFC (shipped with air conditioner) shown.**

[3] Blower must be capable of time-off blower delay. Indoor Blower Off Delay Relay (**58M81**) is recommended for field installation.

[4] Blower control must be set for a time-off blower delay.

ARI RATINGS

[1] ARI Standard 210/240 Ratings						
Cooling Capacity Btuh	Efficiency SEER	Efficiency EER	Total Unit Watts	Indoor Unit Model No.		Expansion Device
13ACX-024 WITH RFC						**2 TON**
Horizontal Indoor Coils + Furnace				**Horizontal Coils**	**+ Furnace**	
23,800	14.00	12.00	1985	CH23-41	[4] G60UHV-36B-090	[2] 0.057 (**97M75**)
23,800	14.00	12.00	1985	CH23-41	[4] G61MPV-36B-045	[2] 0.057 (**97M75**)
23,800	14.00	12.00	1985	CH23-41	[4] G61MPV-36B-070	[2] 0.057 (**97M75**)
23,800	14.00	12.00	1985	CH23-41	[4] G71MPP-36B-070	[2] 0.057 (**97M75**)
23,800	14.00	12.00	1985	CH33-36A-2F	[4] G60UHV-36A-070	[2] 0.057 (**97M75**)
23,800	14.00	12.00	1985	CH33-36B-2F	[4] G60UHV-36B-090	[2] 0.057 (**97M75**)
23,800	14.00	12.00	1985	CH33-36B-2F	[4] G61MPV-36B-045	[2] 0.057 (**97M75**)
23,800	14.00	12.00	1985	CH33-36B-2F	[4] G61MPV-36B-070	[2] 0.057 (**97M75**)
23,800	14.00	12.00	1985	CH33-36B-2F	[4] G71MPP-36B-070	[2] 0.057 (**97M75**)
24,000	14.00	12.00	2000	CH23-41	[4] G60UHV-36A-070	[2] 0.057 (**97M75**)
13ACX-030 WITH TXV						**2.5 TON**
Up-Flow Indoor Coils				**Up-Flow Coils**		
28,600	13.00	11.00	2600	[3] CX34-18/24A/B-6F		Factory TXV
28,800	13.00	11.00	2620	[3, 5] CX34-30A/B/C-6F		Factory TXV
29,200	13.00	11.00	2655	[3] CX34-19A-6F		Factory TXV
29,600	13.00	11.50	2575	[3] CX34-36A/B/C-6F		Factory TXV
29,600	13.00	11.50	2575	[3] CX34-42B-6F		**[2] 37L51**
30,000	13.50	11.50	2610	[3] CX34-25A/B-6F		Factory TXV
30,400	13.50	11.50	2645	[3] CX34-31A/B-6F		Factory TXV
30,800	13.50	11.50	2680	[3] CX34-38A/B-6F		Factory TXV
31,000	13.50	11.50	2695	[3] CX34-43B/C-6F		**[2] 37L51**
Up-Flow Indoor Coils + Furnace				**Up-Flow Coils**	**+ Furnace**	
28,000	13.50	11.50	2435	CX34-18/24A-6F	[4] G60UHV-36A-070	Factory TXV
28,000	13.50	11.50	2435	CX34-18/24B-6F	[4] G61MPV-36B-070	Factory TXV
28,000	13.50	11.50	2435	CX34-18/24B-6F	[4] G61MPV-36B-071	Factory TXV
28,000	13.50	11.50	2435	CX34-18/24B-6F	[4] G71MPP-36B-070	Factory TXV
28,200	13.50	11.50	2450	CX34-18/24B-6F	[4] G60UHV-36B-090	Factory TXV
28,400	13.00	11.00	2580	CX34-18/24B-6F	[4] G61MPV-36B-045	Factory TXV
28,400	14.00	11.50	2470	CX34-30B-6F	[4] G61MPV-36B-070	Factory TXV
28,400	14.00	11.50	2470	CX34-30B-6F	[4] G71MPP-36B-070	Factory TXV
28,600	14.00	12.00	2385	CX34-30A-6F	[4] G60UHV-36A-070	Factory TXV
28,600	14.00	12.00	2385	CX34-30B-6F	[4] G60UHV-36B-090	Factory TXV
28,800	14.00	12.00	2400	CX34-25B-6F	[4] G61MPV-36B-070	Factory TXV
28,800	14.00	12.00	2400	CX34-25B-6F	[4] G71MPP-36B-070	Factory TXV
28,800	14.00	12.00	2400	CX34-36A-6F	[4] G60UHV-36A-070	Factory TXV
28,800	14.00	12.00	2400	CX34-36B-6F	[4] G60UHV-36B-090	Factory TXV
28,800	14.00	12.00	2400	CX34-36B-6F	[4] G61MPV-36B-045	Factory TXV
28,800	14.00	12.00	2400	CX34-36B-6F	[4] G61MPV-36B-070	Factory TXV
28,800	14.00	12.00	2400	CX34-36B-6F	[4] G71MPP-36B-070	Factory TXV
Up-Flow Indoor Coils + Furnace				**Continued on Next Page**		

[1] Certified in accordance with USE certification program which is based on ARI Standard 210/240; 95°F outdoor air temperature, 80°F db / 67°F wb entering evaporator air with 25 ft. of connecting refrigerant lines.
[2] **Factory installed RFC or expansion valve on indoor unit MUST be replaced with expansion valve kit (ordered separately) or RFC (shipped with air conditioner) shown.**
[3] Blower must be capable of time-off blower delay. Indoor Blower Off Delay Relay (**58M81**) is recommended for field installation.
[4] Blower control must be set for a time-off blower delay.
[5] Most popular indoor coil.

ARI RATINGS

[1] ARI Standard 210/240 Ratings						
Cooling Capacity Btuh	Efficiency SEER	Efficiency EER	Total Unit Watts	Indoor Unit Model No.		Expansion Device
13ACX-030 WITH TXV						**2.5 TON**
Up-Flow Indoor Coils + Furnace (Continued)				**Up-Flow Coils**	**+ Furnace**	
28,800	14.00	12.00	2400	CX34-42B-6F	[4] G60UHV-36B-090	**[2] 37L51**
28,800	14.00	12.00	2400	CX34-42B-6F	[4] G61MPV-36B-045	**[2] 37L51**
28,800	14.00	12.00	2400	CX34-42B-6F	[4] G61MPV-36B-070	**[2] 37L51**
28,800	14.00	12.00	2400	CX34-42B-6F	[4] G71MPP-36B-070	**[2] 37L51**
29,000	14.00	11.60	2500	CX34-30B-6F	[4] G61MPV-36B-071	Factory TXV
29,000	14.00	12.00	2415	CX34-25B-6F	[4] G61MPV-36B-045	Factory TXV
29,000	14.00	12.50	2320	CX34-25B-6F	[4] G60UHV-36B-090	Factory TXV
29,600	14.00	12.00	2465	CX34-19A-6F	[4] G61MPV-36B-071	Factory TXV
29,600	14.00	12.00	2465	CX34-31B-6F	[4] G61MPV-36B-045	Factory TXV
29,600	14.00	12.50	2370	CX34-31A-6F	[4] G60UHV-36A-070	Factory TXV
29,600	14.00	12.50	2370	CX34-31B-6F	[4] G61MPV-36B-070	Factory TXV
29,600	14.00	12.50	2370	CX34-31B-6F	[4] G71MPP-36B-070	Factory TXV
29,800	14.00	12.50	2385	CX34-38B-6F	[4] G60UHV-36B-090	Factory TXV
30,000	14.00	12.00	2500	CX34-36B-6F	[4] G61MPV-36B-071	Factory TXV
30,000	14.00	12.00	2500	CX34-42B-6F	[4] G61MPV-36B-071	**[2] 37L51**
30,000	14.00	12.00	2500	CX34-43B-6F	[4] G61MPV-36B-045	**[2] 37L51**
30,000	14.00	12.50	2400	CX34-43B-6F	[4] G60UHV-36B-090	**[2] 37L51**
30,200	14.00	12.00	2515	CX34-25B-6F	[4] G61MPV-36B-071	Factory TXV
30,800	14.00	12.50	2465	CX34-31B-6F	[4] G61MPV-36B-071	Factory TXV
31,000	14.00	12.50	2480	CX34-38B-6F	[4] G61MPV-36B-071	Factory TXV
31,200	14.00	12.50	2495	CX34-43B-6F	[4] G61MPV-36B-071	**[2] 37L51**
Down-Flow Indoor Coils				**Down-Flow Coils**		
28,400	13.00	11.00	2580	[3] CR33-24A/B-F		**[2] 37L51**
29,000	13.50	11.50	2520	[3] CR33-30/36A/B/C-F		**[2] 37L51**
Down-Flow Indoor Coils + Furnace				**Down-Flow Coils**	**+ Furnace**	
28,800	14.00	12.00	2400	CR33-24B-F	[4] G60DFV-36B-090	**[2] 37L51**
29,000	14.00	12.00	2415	CR33-30/36B-F	[4] G61MPV-36B-070	**[2] 37L51**
29,000	14.00	12.00	2415	CR33-30/36B-F	[4] G71MPP-36B-070	**[2] 37L51**
29,200	14.00	12.00	2435	CR33-30/36B-F	[4] G61MPV-36B-045	**[2] 37L51**
29,400	14.00	12.00	2450	CR33-24B-F	[4] G61MPV-36B-071	**[2] 37L51**
29,400	14.00	12.50	2350	CR33-30/36B-F	[4] G60DFV-36B-090	**[2] 37L51**
30,400	14.50	12.50	2430	CR33-30/36B-F	[4] G61MPV-36B-071	**[2] 37L51**
Horizontal Indoor Coils				**Horizontal Coils**		
28,400	13.00	11.00	2582	[3] CH33-19A-2F		**[2] 37L51**
28,600	13.00	11.00	2600	[3] CH33-36A/B/C-2F		**[2] 37L51**
29,200	13.50	11.50	2540	[3] CH33-42B-2F		**[2] 37L51**
29,200	13.50	11.50	2540	[3] CH33-25A-2F		**[2] 37L51**
29,800	13.50	11.50	2590	[3] CH33-31A-2F		**[2] 37L51**

[1] Certified in accordance with USE certification program which is based on ARI Standard 210/240; 95°F outdoor air temperature, 80°F db / 67°F wb entering evaporator air with 25 ft. of connecting refrigerant lines.
[2] **Factory installed RFC or expansion valve on indoor unit MUST be replaced with expansion valve kit (ordered separately) or RFC (shipped with air conditioner) shown.**
[3] Blower must be capable of time-off blower delay. Indoor Blower Off Delay Relay (**58M81**) is recommended for field installation.
[4] Blower control must be set for a time-off blower delay.

ARI RATINGS

[1] ARI Standard 210/240 Ratings						
Cooling Capacity Btuh	Efficiency SEER	Efficiency EER	Total Unit Watts	Indoor Unit Model No.		Expansion Device
13ACX-030 WITH TXV						**2.5 TON**
Horizontal Indoor Coils + Furnace				**Horizontal Coils**	**+ Furnace**	
28,800	14.00	12.00	2400	CH33-36A-2F	[4] G60UHV-36A-070	[2] **37L51**
28,800	14.00	12.00	2400	CH33-36B-2F	[4] G61MPV-36B-070	[2] **37L51**
28,800	14.00	12.00	2400	CH33-36B-2F	[4] G71MPP-36B-070	[2] **37L51**
29,000	14.00	12.00	2415	CH23-41	[4] G61MPV-36B-070	[2] **37L51**
29,000	14.00	12.00	2415	CH23-41	[4] G71MPP-36B-070	[2] **37L51**
29,000	14.00	12.50	2320	CH33-36B-2F	[4] G60UHV-36B-090	[2] **37L51**
29,200	14.00	12.00	2433	CH23-41	[4] G61MPV-36B-045	[2] **37L51**
29,200	14.00	12.50	2335	CH23-41	[4] G60UHV-36B-090	[2] **37L51**
29,400	14.00	12.00	2450	CH33-25A-2F	[4] G60UHV-36A-070	[2] **37L51**
29,400	14.00	12.00	2450	CH33-25B-2F	[4] G61MPV-36B-070	[2] **37L51**
29,400	14.00	12.00	2450	CH33-25B-2F	[4] G71MPP-36B-070	[2] **37L51**
29,400	14.00	12.00	2450	CH33-42B-2F	[4] G61MPV-36B-070	[2] **37L51**
29,400	14.00	12.00	2450	CH33-42B-2F	[4] G71MPP-36B-070	[2] **37L51**
29,400	14.00	12.50	2350	CH33-25B-2F	[4] G60UHV-36B-090	[2] **37L51**
29,600	14.00	12.00	2465	CH33-42B-2F	[4] G61MPV-36B-045	[2] **37L51**
29,600	14.00	12.50	2370	CH33-42B-2F	[4] G60UHV-36B-090	[2] **37L51**
29,600	14.50	12.50	2370	CH33-36C-2F	[4] G61MPV-36C-090	[2] **37L51**
29,600	14.50	12.50	2370	CH33-36C-2F	[4] G71MPP-36C-090	[2] **37L51**
29,800	14.00	12.00	2485	CH33-36B-2F	[4] G61MPV-36B-071	[2] **37L51**
29,800	14.00	12.50	2385	CH33-31B-2F	[4] G61MPV-36B-045	[2] **37L51**
30,000	14.00	12.00	2500	CH23-41	[4] G61MPV-36B-071	[2] **37L51**
30,000	14.00	12.00	2500	CH33-25B-2F	[4] G61MPV-36B-071	[2] **37L51**
30,200	14.00	12.50	2415	CH33-31B-2F	[4] G60UHV-36B-090	[2] **37L51**
30,200	14.00	12.50	2415	CH33-31B-2F	[4] G61MPV-36B-070	[2] **37L51**
30,200	14.00	12.50	2415	CH33-31B-2F	[4] G71MPP-36B-070	[2] **37L51**
30,600	14.00	12.00	2550	CH33-42B-2F	[4] G61MPV-36B-071	[2] **37L51**
Air Handlers				**Air Handlers**		
27,800	13.00	11.00	2525	[3] CBX32M-018/24 (Multi-Position)		Factory TXV
29,200	14.00	12.00	2435	CBX26UH-030 (Up-Flow / Horizontal)		Factory TXV
29,400	14.00	12.00	2450	[4] CBX32MV-024/030 (Multi-Position)		Factory TXV
29,800	14.00	12.00	2485	[3] CB27UH-030 (Up-Flow / Horizontal)		[2] **37L51**
29,800	14.00	12.00	2485	[3] CB27UH-036 (Up-Flow / Horizontal)		[2] **37L51**
30,400	14.00	12.50	2430	[3] CBX32M-030 (Multi-Position)		Factory TXV
30,400	14.00	12.50	2430	[3] CBX32M-036 (Multi-Position)		Factory TXV
13ACX-030 WITH RFCIV						**2.5 TON**
Up-Flow Indoor Coils				**Up-Flow Coils**		
29,800	13.50	11.00	2710	[3] C33-43B/C		[2] 0.065 (**10W99**)
28,600	13.00	11.00	2600	[3] C33-42B		[2] 0.065 (**10W99**)
29,600	13.50	11.00	2690	[3] C33-38A/B		[2] 0.065 (**10W99**)
28,400	13.00	11.00	2580	[3] C33-36B/C		[2] 0.065 (**10W99**)
29,400	13.00	11.00	2675	[3] C33-31A/B		[2] 0.065 (**10W99**)
28,800	13.00	11.00	2620	[3] C33-25A/B		[2] 0.065 (**10W99**)

[1] Certified in accordance with USE certification program which is based on ARI Standard 210/240; 95°F outdoor air temperature, 80°F db / 67°F wb entering evaporator air with 25 ft. of connecting refrigerant lines.
[2] **Factory installed RFC or expansion valve on indoor unit MUST be replaced with expansion valve kit (ordered separately) or RFC (shipped with air conditioner) shown.**
[3] Blower must be capable of time-off blower delay. Indoor Blower Off Delay Relay (**58M81**) is recommended for field installation.
[4] Blower control must be set for a time-off blower delay.

ARI RATINGS

[1] ARI Standard 210/240 Ratings						
Cooling Capacity Btuh	Efficiency SEER	Efficiency EER	Total Unit Watts	Indoor Unit Model No.		Expansion Device
13ACX-030 WITH RFCIV						**2.5 TON**
Up-Flow Indoor Coils + Furnace				**Up-Flow Coils**	**+ Furnace**	
28,000	14.00	11.50	2435	C33-19A	[4] G60UHV-36B-090	[2] 0.065 (**10W99**)
28,200	14.00	11.50	2450	C33-19A	[4] G60UHV-36A-070	[2] 0.065 (**10W99**)
28,400	13.50	11.50	2470	C33-19A	[4] G61MPV-36B-070	[2] 0.065 (**10W99**)
28,400	13.50	11.50	2470	C33-19A	[4] G71MPP-36B-070	[2] 0.065 (**10W99**)
28,600	13.50	11.50	2485	C33-19A	[4] G61MPV-36B-045	[2] 0.065 (**10W99**)
28,600	14.00	11.50	2485	C33-36B	[4] G61MPV-36B-045	[2] 0.065 (**10W99**)
28,600	14.00	11.50	2485	C33-42B	[4] G61MPV-36B-045	[2] 0.065 (**10W99**)
28,600	14.00	12.00	2385	C33-36B	[4] G61MPV-36B-070	[2] 0.065 (**10W99**)
28,600	14.00	12.00	2385	C33-36B	[4] G71MPP-36B-070	[2] 0.065 (**10W99**)
28,600	14.00	12.00	2385	C33-42B	[4] G61MPV-36B-070	[2] 0.065 (**10W99**)
28,600	14.00	12.00	2385	C33-42B	[4] G71MPP-36B-070	[2] 0.065 (**10W99**)
28,800	14.00	12.00	2400	C33-36B	[4] G60UHV-36B-090	[2] 0.065 (**10W99**)
28,800	14.00	12.00	2400	C33-42B	[4] G60UHV-36B-090	[2] 0.065 (**10W99**)
29,000	14.00	11.50	2520	C33-25B	[4] G61MPV-36B-070	[2] 0.065 (**10W99**)
29,000	14.00	11.50	2520	C33-25B	[4] G71MPP-36B-070	[2] 0.065 (**10W99**)
29,000	14.00	12.00	24185	C33-25A	[4] G60UHV-36A-070	[2] 0.065 (**10W99**)
29,000	14.00	12.00	2415	C33-36A	[4] G60UHV-36A-070	[2] 0.065 (**10W99**)
29,200	14.00	11.50	2540	C33-25B	[4] G61MPV-36B-045	[2] 0.065 (**10W99**)
29,200	14.00	12.00	2435	C33-25B	[4] G60UHV-36B-090	[2] 0.065 (**10W99**)
29,600	14.00	12.00	2465	C33-31A	[4] G60UHV-36A-070	[2] 0.065 (**10W99**)
29,600	14.00	12.00	2465	C33-31B	[4] G60UHV-36B-090	[2] 0.065 (**10W99**)
29,600	14.00	12.00	2465	C33-31B	[4] G61MPV-36B-070	[2] 0.065 (**10W99**)
29,600	14.00	12.00	2465	C33-31B	[4] G71MPP-36B-070	[2] 0.065 (**10W99**)
29,800	14.00	12.00	2485	C33-31B	[4] G61MPV-36B-045	[2] 0.065 (**10W99**)
29,800	14.00	12.00	2485	C33-38A	[4] G60UHV-36A-070	[2] 0.065 (**10W99**)
30,000	14.00	12.00	2500	C33-43B	[4] G60UHV-36B-090	[2] 0.065 (**10W99**)
30,200	14.00	12.00	2515	C33-43B	[4] G61MPV-36B-045	[2] 0.065 (**10W99**)
Down-Flow Indoor Coils				**Down-Flow Coils**		
28,800	13.00	11.00	2620	[3] CR33-30/36A-F		[2] 0.065 (**10W99**)
Down-Flow Indoor Coils + Furnace				**Down-Flow Coils**	**+ Furnace**	
29,000	14.00	12.00	2415	CR33-30/36B-F	[4] G61MPV-36B-045	[2] 0.065 (**10W99**)
29,400	14.00	12.00	2450	CR33-30/36B-F	[4] G60DFV-36B-090	[2] 0.065 (**10W99**)
Horizontal Indoor Coils				**Horizontal Coils**		
28,600	13.00	11.00	2600	[3] CH33-36A/B/C-2F		[2] 0.065 (**10W99**)
29,200	13.00	11.00	2655	[3] CH33-42B-2F		[2] 0.065 (**10W99**)

1 Certified in accordance with USE certification program which is based on ARI Standard 210/240; 95°F outdoor air temperature, 80°F db / 67°F wb entering evaporator air with 25 ft. of connecting refrigerant lines.

2 Factory installed RFC or expansion valve on indoor unit MUST be replaced with expansion valve kit (ordered separately) or RFC (shipped with air conditioner) shown.

3 Blower must be capable of time-off blower delay. Indoor Blower Off Delay Relay (**58M81**) is recommended for field installation.

4 Blower control must be set for a time-off blower delay.

ARI RATINGS

[1] ARI Standard 210/240 Ratings						
Cooling Capacity Btuh	Efficiency SEER	Efficiency EER	Total Unit Watts	Indoor Unit Model No.		Expansion Device
13ACX-030 WITH RFCIV						**2.5 TON**
Horizontal Indoor Coils + Furnace				**Horizontal Coils**	**+ Furnace**	
28,800	13.50	11.50	2505	CH33-36B-2F	[4] G61MPV-36B-045	[2] 0.065 (**10W99**)
28,800	14.00	12.00	2400	CH23-41	[4] G60UHV-36B-090	[2] 0.065 (**10W99**)
28,800	14.00	12.00	2400	CH33-36B-2F	[4] G60UHV-36B-090	[2] 0.065 (**10W99**)
29,000	14.00	11.50	2520	CH33-36A-2F	[4] G60UHV-36A-070	[2] 0.065 (**10W99**)
29,000	14.00	11.50	2520	CH33-36B-2F	[4] G61MPV-36B-070	[2] 0.065 (**10W99**)
29,000	14.00	11.50	2520	CH33-36B-2F	[4] G71MPP-36B-070	[2] 0.065 (**10W99**)
29,000	14.00	12.00	2415	CH23-41	[4] G60UHV-36A-070	[2] 0.065 (**10W99**)
29,400	14.00	12.00	2450	CH33-42B-2F	[4] G61MPV-36B-070	[2] 0.065 (**10W99**)
29,400	14.00	12.00	2450	CH33-42B-2F	[4] G71MPP-36B-070	[2] 0.065 (**10W99**)
29,400	14.00	12.00	2450	CH33-42B-2F	[4] G61MPV-36B-045	[2] 0.065 (**10W99**)
29,600	14.00	12.00	2465	CH33-31A-2F	[4] G60UHV-36A-070	[2] 0.065 (**10W99**)
29,600	14.00	12.00	2465	CH33-31B-2F	[4] G61MPV-36B-071	[2] 0.065 (**10W99**)
29,600	14.00	12.00	2465	CH33-42B-2F	[4] G60UHV-36B-090	[2] 0.065 (**10W99**)
30,000	14.00	12.50	2400	CH33-31B-2F	[4] G60UHV-36B-090	[2] 0.065 (**10W99**)
13ACX-036 WITH TXV						**3 TON**
Up-Flow Indoor Coils				**Up-Flow Coils**		
33,800	13.00	10.90	3100	[3, 5] CX34-38B-6F		Factory TXV
34,600	13.00	11.00	3145	[3] CX34-50/60C-6F		**[2] 37L51**
34,800	13.00	11.00	3165	[3] CX34-43B-6F		**[2] 37L51**
Up-Flow Indoor Coils + Furnace				**Up-Flow Coils**	**+ Furnace**	
34,400	13.50	11.50	2990	CX34-36C-6F	[4] G61MPV-36C-090	Factory TXV
34,400	13.50	11.50	2990	CX34-36C-6F	[4] G71MPP-36C-090	Factory TXV
34,800	14.00	11.60	3000	CX34-38B-6F	[4] G61MPV-36B-070	Factory TXV
34,800	14.00	11.60	3000	CX34-38B-6F	[4] G71MPP-36B-070	Factory TXV
35,000	13.50	11.60	3015	CX34-38A-6F	[4] G60UHV-36A-070	Factory TXV
35,000	13.50	11.60	3015	CX34-38B-6F	[4] G61MPV-36B-045	Factory TXV
35,200	14.00	11.60	3035	CX34-38B-6F	[4] G60UHV-36B-090	Factory TXV
35,200	14.00	11.60	3035	CX34-43B-6F	[4] G61MPV-36B-045	**[2] 37L51**
35,200	14.00	11.60	3035	CX34-43B-6F	[4] G61MPV-36B-070	**[2] 37L51**
35,200	14.00	11.60	3035	CX34-43B-6F	[4] G71MPP-36B-070	**[2] 37L51**
35,600	14.00	11.60	3070	CX34-43B-6F	[4] G61MPV-36B-071	**[2] 37L51**
35,600	14.00	11.60	3070	CX34-50/60C-6F	[4] G61MPV-60C-090	**[2] 37L51**
35,600	14.00	11.60	3070	CX34-50/60C-6F	[4] G71MPP-60C-090	**[2] 37L51**
35,600	14.00	12.00	2965	CX34-43B-6F	[4] G60UHV-36B-090	**[2] 37L51**
35,600	14.00	12.00	2965	CX34-50/60C-6F	[4] G60UHV-60C-110	**[2] 37L51**
36,400	14.00	11.60	3140	CX34-50/60C-6F	[4] G61MPV-60C-091	**[2] 37L51**
36,400	14.00	11.60	3140	CX34-50/60C-6F	[4] G61MPV-60C-111	**[2] 37L51**

[1] Certified in accordance with USE certification program which is based on ARI Standard 210/240; 95°F outdoor air temperature, 80°F db / 67°F wb entering evaporator air with 25 ft. of connecting refrigerant lines.
[2] **Factory installed RFC or expansion valve on indoor unit MUST be replaced with expansion valve kit (ordered separately) or RFC (shipped with air conditioner) shown.**
[3] Blower must be capable of time-off blower delay. Indoor Blower Off Delay Relay (**58M81**) is recommended for field installation.
[4] Blower control must be set for a time-off blower delay.
[5] Most popular indoor coil.

ARI RATINGS

[1] ARI Standard 210/240 Ratings						
Cooling Capacity Btuh	Efficiency SEER	Efficiency EER	Total Unit Watts	Indoor Unit Model No.		Expansion Device
13ACX-036 WITH TXV						**3 TON**
Down-Flow Indoor Coils				**Down-Flow Coils**		
34,000	13.00	11.00	3090	[3] CR33-48B-F		[2] **37L51**
Down-Flow Indoor Coils + Furnace				**Down-Flow Coils**	**+ Furnace**	
33,400	13.50	11.00	3035	CR33-48B-F	[4] G61MPV-36B-070	[2] **37L51**
33,400	13.50	11.00	3035	CR33-48B-F	[4] G71MPP-36B-070	[2] **37L51**
33,600	13.00	11.00	3055	CR33-48B-F	[4] G61MPV-36B-045	[2] **37L51**
33,800	14.00	11.60	2915	CR33-48B-F	[4] G60DFV-36B-090	[2] **37L51**
34,200	13.50	11.00	3110	CR33-48B-F	[4] G61MPV-36B-071	[2] **37L51**
34,800	13.50	11.50	3025	CR33-30/36C-F	[4] G61MPV-36C-090	[2] **37L51**
34,800	13.50	11.50	3025	CR33-30/36C-F	[4] G71MPP-36C-090	[2] **37L51**
Horizontal Indoor Coils				**Horizontal Coils**		
34,600	13.00	11.00	3145	[3] CH33-44/48B-2F		[2] **37L51**
34,800	13.00	11.00	3165	[3] CH33-48C-2F		[2] **37L51**
36,200	13.50	11.00	3290	[3] CH33-43B-2F		[2] **37L51**
Horizontal Indoor Coils + Furnace				**Horizontal Coils**	**+ Furnace**	
33,800	13.50	11.00	3075	CH23-51	[4] G61MPV-36B-070	[2] **37L51**
33,800	13.50	11.00	3075	CH23-51	[4] G71MPP-36B-070	[2] **37L51**
34,000	13.00	11.00	3090	CH23-51	[4] G61MPV-36B-045	[2] **37L51**
34,200	14.00	11.60	2950	CH23-51	[4] G60UHV-36B-090	[2] **37L51**
34,800	13.50	11.50	3025	CH33-44/48B-2F	[4] G61MPV-36B-070	[2] **37L51**
34,800	13.50	11.50	3025	CH33-44/48B-2F	[4] G71MPP-36B-070	[2] **37L51**
35,000	13.50	11.00	3180	CH33-44/48B-2F	[4] G61MPV-36B-045	[2] **37L51**
35,200	13.50	11.50	3060	CH33-44/48B-2F	[4] G61MPV-36B-071	[2] **37L51**
35,200	14.00	11.60	3035	CH33-44/48B-2F	[4] G60UHV-36B-090	[2] **37L51**
35,600	14.00	11.60	3070	CH33-48C-2F	[4] G61MPV-60C-090	[2] **37L51**
35,600	14.00	11.60	3070	CH33-48C-2F	[4] G71MPP-60C-090	[2] **37L51**
35,600	14.00	11.60	3070	CH33-48C-2F	[4] G61MPV-60C-110	[2] **37L51**
35,600	14.00	11.60	3070	CH33-48C-2F	[4] G71MPP-60C-110	[2] **37L51**
Air Handlers				**Air Handlers**		
33,600	13.00	11.00	3055	[3] CBX32M-030 (Multi-Position)		Factory TXV
34,000	13.00	11.00	3090	CBX26UH-036 (Up-Flow / Horizontal)		Factory TXV
34,200	13.50	11.00	3110	[3] CBX32M-036 (Multi-Position)		Factory TXV
34,200	13.50	11.00	3110	[3] CBX32M-042 (Multi-Position)		[2] **37L51**
34,600	14.00	11.60	2985	[4] CBX32MV-036 (Multi-Position)		Factory TXV
35,200	13.50	11.50	3060	[3] CBX32M-048 (Multi-Position)		[2] **37L51**
35,600	14.00	12.00	2965	[4] CBX32MV-048 (Multi-Position)		[2] **37L51**
36,200	14.00	12.00	3015	[3] CBX27UH-042 (Up-Flow / Horizontal)		[2] **37L51**
13ACX-036 WITH RFC						**3 TON**
Up-Flow Indoor Coils				**Up-Flow Coils**		
34,800	13.00	10.95	3180	[3] C33-38B		[2] 0.073 (**11W02**)
35,200	13.00	10.95	3215	[3] C33-50/60C		[2] 0.073 (**11W02**)
35,400	13.00	11.00	3220	[3] C33-43B/C		[2] 0.073 (**11W02**)

[1] Certified in accordance with USE certification program which is based on ARI Standard 210/240; 95°F outdoor air temperature, 80°F db / 67°F wb entering evaporator air with 25 ft. of connecting refrigerant lines.
[2] **Factory installed RFC or expansion valve on indoor unit MUST be replaced with expansion valve kit (ordered separately) or RFC (shipped with air conditioner) shown.**
[3] Blower must be capable of time-off blower delay. Indoor Blower Off Delay Relay (**58M81**) is recommended for field installation.
[4] Blower control must be set for a time-off blower delay.

ARI RATINGS

[1] ARI Standard 210/240 Ratings						
Cooling Capacity Btuh	Efficiency SEER	Efficiency EER	Total Unit Watts	Indoor Unit Model No.		Expansion Device
13ACX-036 WITH RFC						**3 TON**
Up-Flow Indoor Coils + Furnace				**Up-Flow Coils**	**+ Furnace**	
35,000	13.50	11.50	3045	C33-38B	[4] G61MPV-36B-070	[2] 0.073 (**11W02**)
35,000	13.50	11.50	3045	C33-38B	[4] G71MPP-36B-070	[2] 0.073 (**11W02**)
35,000	13.50	11.50	3045	C33-43B	[4] G61MPV-36B-045	[2] 0.073 (**11W02**)
35,200	13.50	11.50	3060	C33-38B	[4] G61MPV-36B-045	[2] 0.073 (**11W02**)
35,400	13.50	11.50	3080	C33-38A	[4] G60UHV-36A-070	[2] 0.073 (**11W02**)
35,600	13.50	11.50	3095	C33-43B	[4] G61MPV-36B-070	[2] 0.073 (**11W02**)
35,600	13.50	11.50	3095	C33-43B	[4] G71MPP-36B-070	[2] 0.073 (**11W02**)
35,800	14.00	11.50	3115	C33-38B	[4] G60UHV-36B-090	[2] 0.073 (**11W02**)
36,000	14.00	11.50	3130	C33-43B	[4] G60UHV-36B-090	[2] 0.073 (**11W02**)
36,000	14.00	11.50	3130	C33-50/60C	[4] G61MPV-60C-090	[2] 0.073 (**11W02**)
36,000	14.00	11.50	3130	C33-50/60C	[4] G61MPV-60C-110	[2] 0.073 (**11W02**)
36,000	14.00	11.50	3130	C33-50/60C	[4] G71MPP-60C-090	[2] 0.073 (**11W02**)
36,000	14.00	11.50	3130	C33-50/60C	[4] G71MPP-60C-110	[2] 0.073 (**11W02**)
36,200	14.00	11.50	3150	C33-50/60C	[4] G60UHV-60C-110	[2] 0.073 (**11W02**)
Down-Flow Indoor Coils				**Down-Flow Coils**		
34,000	13.00	11.00	3090	[3] CR33-48B-F		[2] 0.073 (**11W02**)
Down-Flow Indoor Coils + Furnace				**Down-Flow Coils**	**+ Furnace**	
34,000	13.00	11.00	3090	CR33-48B-F	[4] G61MPV-36B-070	[2] 0.073 (**11W02**)
34,000	13.00	11.00	3090	CR33-48B-F	[4] G71MPP-36B-070	[2] 0.073 (**11W02**)
34,000	13.00	11.00	3090	CR33-48B-F	[4] G61MPV-36B-045	[2] 0.073 (**11W02**)
34,400	13.50	11.50	2990	CR33-48B-F	[4] G60DFV-36B-090	[2] 0.073 (**11W02**)
34,600	13.50	11.00	3145	CR33-48C-F	[4] G61MPV-60C-090	[2] 0.073 (**11W02**)
34,600	13.50	11.00	3145	CR33-48C-F	[4] G71MPP-60C-090	[2] 0.073 (**11W02**)
34,600	13.50	11.00	3145	CR33-48C-F	[4] G61MPV-60C-110	[2] 0.073 (**11W02**)
34,600	13.50	11.00	3145	CR33-48C-F	[4] G71MPP-60C-110	[2] 0.073 (**11W02**)
Horizontal Indoor Coils				**Horizontal Coils**		
34,800	13.00	11.00	3165	[3] CH33-48-2F		[2] 0.073 (**11W02**)
35,000	13.00	10.90	3210	[3] CH33-44/48B-2F		[2] 0.073 (**11W02**)
Horizontal Indoor Coils + Furnace				**Horizontal Coils**	**+ Furnace**	
34,400	13.00	11.00	3125	CH23-41	[4] G61MPV-36B-045	[2] 0.073 (**11W02**)
34,400	13.00	11.00	3125	CH23-51	[4] G61MPV-36B-070	[2] 0.073 (**11W02**)
34,400	13.00	11.00	3125	CH23-51	[4] G71MPP-36B-070	[2] 0.073 (**11W02**)
34,400	13.50	11.00	3125	CH23-41	[4] G61MPV-36B-070	[2] 0.073 (**11W02**)
34,400	13.50	11.00	3125	CH23-41	[4] G71MPP-36B-070	[2] 0.073 (**11W02**)
34,600	13.00	11.00	3145	CH23-51	[4] G61MPV-36B-045	[2] 0.073 (**11W02**)
34,600	14.00	11.50	3010	CH23-41	[4] G60UHV-36B-090	[2] 0.073 (**11W02**)
34,600	14.00	11.50	3010	CH23-51	[4] G60UHV-36B-090	[2] 0.073 (**11W02**)
35,200	13.50	11.00	3200	CH33-44/48B-2F	[4] G61MPV-36B-045	[2] 0.073 (**11W02**)
35,400	13.50	11.00	3220	CH33-44/48B-2F	[4] G61MPV-36B-070	[2] 0.073 (**11W02**)
35,400	13.50	11.00	3220	CH33-44/48B-2F	[4] G71MPP-36B-070	[2] 0.073 (**11W02**)
35,600	14.00	11.50	3095	CH33-44/48B-2F	[4] G60UHV-36B-090	[2] 0.073 (**11W02**)
36,000	14.00	11.50	3130	CH33-48C-2F	[4] G61MPV-60C-090	[2] 0.073 (**11W02**)
36,000	14.00	11.50	3130	CH33-48C-2F	[4] G71MPP-60C-090	[2] 0.073 (**11W02**)
36,000	14.00	11.50	3130	CH33-48C-2F	[4] G61MPV-60C-110	[2] 0.073 (**11W02**)
36,000	14.00	11.50	3130	CH33-48C-2F	[4] G71MPP-60C-110	[2] 0.073 (**11W02**)

[1] Certified in accordance with USE certification program which is based on ARI Standard 210/240; 95°F outdoor air temperature, 80°F db / 67°F wb entering evaporator air with 25 ft. of connecting refrigerant lines.
[2] **Factory installed RFC or expansion valve on indoor unit MUST be replaced with expansion valve kit (ordered separately) or RFC (shipped with air conditioner) shown.**
[3] Blower must be capable of time-off blower delay. Indoor Blower Off Delay Relay (**58M81**) is recommended for field installation.
[4] Blower control must be set for a time-off blower delay.

ARI RATINGS

[1] ARI Standard 210/240 Ratings						
Cooling Capacity Btuh	Efficiency SEER	Efficiency EER	Total Unit Watts	Indoor Unit Model No.		Expansion Device
13ACX-042 WITH TXV						**3.5 TON**
Up-Flow Indoor Coils				**Up-Flow Coils**		
40,000	13.00	10.80	3700	[3] CX34-38A/B-6F		[2] **39L72**
40,000	13.00	10.80	3700	[3] CX34-50/60C-6F		[2] **39L72**
40,500	13.00	10.90	3710	[3, 5] CX34-43B/C-6F		Factory TXV
41,000	13.00	11.00	3715	[3] CX34-49C-6F		[2] **39L72**
Up-Flow Indoor Coils + Furnace				**Up-Flow Coils**	**+ Furnace**	
40,500	13.00	11.00	3690	CX34-38B-6F	[4] G61MPV-36B-070	[2] **39L72**
40,500	13.00	11.00	3690	CX34-38B-6F	[4] G71MPP-36B-070	[2] **39L72**
40,500	13.50	11.00	3555	CX34-38B-6F	[4] G60UHV-36B-090	[2] **39L72**
40,500	14.00	11.50	3485	CX34-50/60C-6F	[4] G60UHV-60C-090	[2] **39L72**
41,000	13.00	11.00	3680	CX34-43B-6F	[4] G61MPV-36B-070	Factory TXV
41,000	13.00	11.00	3680	CX34-43B-6F	[4] G71MPP-36B-070	Factory TXV
41,000	13.50	11.00	3590	CX34-50/60C-6F	[4] G61MPV-60C-090	[2] **39L72**
41,000	13.50	11.00	3590	CX34-50/60C-6F	[4] G71MPP-60C-090	[2] **39L72**
41,000	13.50	11.50	3575	CX34-49C-6F	[4] G61MPV-60C-090	[2] **39L72**
41,000	13.50	11.50	3575	CX34-49C-6F	[4] G71MPP-60C-090	[2] **39L72**
41,000	14.00	11.50	3475	CX34-49C-6F	[4] G60UHV-60C-090	[2] **39L72**
41,000	14.00	11.50	3490	CX34-43C-6F	[4] G60UHV-60C-090	Factory TXV
41,000	14.00	11.50	3510	CX34-49C-6F	[4] G60UHV-60C-110	[2] **39L72**
41,000	14.00	11.50	3525	CX34-49C-6F	[4] G61MPV-60C-110	[2] **39L72**
41,000	14.00	11.50	3525	CX34-49C-6F	[4] G71MPP-60C-110	[2] **39L72**
41,000	14.00	11.50	3530	CX34-50/60C-6F	[4] G60UHV-60C-110	[2] **39L72**
41,000	14.00	11.50	3535	CX34-43C-6F	[4] G60UHV-60C-110	Factory TXV
41,000	14.00	11.50	3545	CX34-50/60C-6F	[4] G61MPV-60C-110	[2] **39L72**
41,000	14.00	11.50	3545	CX34-50/60C-6F	[4] G71MPP-60C-110	[2] **39L72**
41,000	14.00	11.50	3550	CX34-43B-6F	[4] G60UHV-36B-090	Factory TXV
41,000	14.00	11.50	3550	CX34-43C-6F	[4] G61MPV-60C-110	Factory TXV
41,000	14.00	11.50	3550	CX34-43C-6F	[4] G71MPP-60C-110	Factory TXV
41,500	13.50	11.50	3595	CX34-43C-6F	[4] G61MPV-60C-090	Factory TXV
41,500	13.50	11.50	3595	CX34-43C-6F	[4] G71MPP-60C-090	Factory TXV
Down-Flow Indoor Coils				**Down-Flow Coils**		
40,000	13.00	10.80	3700	[3] CR33-50/60C-F		[2] **39L72**
40,000	13.00	10.80	3700	[3] CR33-60D-F		[2] **39L72**
Down-Flow Indoor Coils + Furnace				**Down-Flow Coils**	**+ Furnace**	
40,500	14.00	11.50	3475	CR33-50/60C-F	[4] G60DFV-60C-090	[2] **39L72**
40,500	14.00	11.50	3520	CR33-50/60C-F	[4] G61MPV-60C-110	[2] **39L72**
40,500	14.00	11.50	3520	CR33-50/60C-F	[4] G71MPP-60C-110	[2] **39L72**
41,000	14.00	11.50	3495	CR33-60D-F	[4] G60DFV-60D-135	[2] **39L72**
41,000	14.00	11.50	3495	CR33-60D-F	[4] G61MPV-60D-135	[2] **39L72**
41,000	14.00	11.50	3495	CR33-60D-F	[4] G71MPP-60D-135	[2] **39L72**
41,000	14.00	11.50	3515	CR33-50/60C-F	[4] G60DFV-60C-110	[2] **39L72**
41,000	14.00	11.50	3565	CR33-50/60C-F	[4] G61MPV-60C-090	[2] **39L72**
41,000	14.00	11.50	3565	CR33-50/60C-F	[4] G71MPP-60C-090	[2] **39L72**

[1] Certified in accordance with USE certification program which is based on ARI Standard 210/240; 95°F outdoor air temperature, 80°F db / 67°F wb entering evaporator air with 25 ft. of connecting refrigerant lines.
[2] **Factory installed RFC or expansion valve on indoor unit MUST be replaced with expansion valve kit (ordered separately) or RFC (shipped with air conditioner) shown.**
[3] Blower must be capable of time-off blower delay. Indoor Blower Off Delay Relay (**58M81**) is recommended for field installation.
[4] Blower control must be set for a time-off blower delay.
[5] Most popular indoor coil.

ARI RATINGS

[1] ARI Standard 210/240 Ratings					
Cooling Capacity Btuh	Efficiency SEER	Efficiency EER	Total Unit Watts	Indoor Unit Model No.	Expansion Device
13ACX-042 WITH TXV					**3.5 TON**
Horizontal Indoor Coils				**Horizontal Coils**	
39,500	13.00	10.70	3690	[3] CH23-65	[2] **39L72**
40,000	13.00	10.80	3700	[3] CH33-48C-2F	[2] **39L72**
41,000	13.00	11.00	3725	[3] CH33-43B/C-2F	[2] **39L72**
41,000	13.00	11.00	3725	[3] CH33-49C-2F	[2] **39L72**
41,000	13.00	11.00	3715	[3] CH33-50/60C-2F	[2] **39L72**
Horizontal Indoor Coils + Furnace				**Horizontal Coils + Furnace**	
40,500	13.50	11.00	3555	CH23-65 [4] G60UHV-60C-090	[2] **39L72**
40,500	13.50	11.00	3595	CH23-65 [4] G61MPV-60C-090	[2] **39L72**
40,500	13.50	11.00	3595	CH23-65 [4] G71MPP-60C-090	[2] **39L72**
41,000	13.50	11.00	3725	CH33-43C-2F [4] G61MPV-36C-090	[2] **39L72**
41,000	13.50	11.00	3725	CH33-43C-2F [4] G71MPP-36C-090	[2] **39L72**
41,000	13.50	11.50	3565	CH33-43C-2F [4] G61MPV-60C-090	[2] **39L72**
41,000	13.50	11.50	3565	CH33-43C-2F [4] G71MPP-60C-090	[2] **39L72**
41,000	13.50	11.00	3725	CH33-43C-2F [4] G61MPV-60C-111	[2] **39L72**
41,000	13.50	11.00	3605	CH33-48C-2F [4] G61MPV-60C-090	[2] **39L72**
41,000	13.50	11.00	3605	CH33-48C-2F [4] G71MPP-60C-090	[2] **39L72**
41,000	13.50	11.50	3565	CH33-48C-2F [4] G61MPV-60C-110	[2] **39L72**
41,000	13.50	11.50	3565	CH33-48C-2F [4] G71MPP-60C-110	[2] **39L72**
41,000	14.00	11.50	3565	CH33-43C-2F [4] G60UHV-60C-090	[2] **39L72**
41,000	14.00	11.50	3565	CH33-43C-2F [4] G60UHV-60C-110	[2] **39L72**
41,000	14.00	11.50	3565	CH33-43C-2F [4] G61MPV-60C-110	[2] **39L72**
41,000	14.00	11.50	3565	CH33-43C-2F [4] G71MPP-60C-110	[2] **39L72**
41,500	13.00	10.90	3805	CH33-43B-2F [4] G61MPV-36B-045	[2] **39L72**
41,500	13.00	11.00	3775	CH33-43B-2F [4] G61MPV-36B-070	[2] **39L72**
41,500	13.00	11.00	3775	CH33-43B-2F [4] G71MPP-36B-070	[2] **39L72**
41,500	13.00	11.00	3775	CH33-43B-2F [4] G61MPV-36B-071	[2] **39L72**
41,500	13.50	11.50	3610	CH33-43B-2F [4] G60UHV-36B-090	[2] **39L72**
41,500	13.50	11.00	3775	CH33-49C-2F [4] G71MPP-36C-090	[2] **39L72**
41,500	13.50	11.00	3775	CH33-43C-2F [4] G61MPV-60C-091	[2] **39L72**
41,500	13.50	11.00	3775	CH33-49C-2F [4] G61MPV-36C-090	[2] **39L72**
41,500	13.50	11.50	3610	CH33-49C-2F [4] G61MPV-60C-090	[2] **39L72**
41,500	13.50	11.50	3610	CH33-49C-2F [4] G71MPP-60C-090	[2] **39L72**
41,500	13.50	11.00	3775	CH33-49C-2F [4] G61MPV-60C-091	[2] **39L72**
41,500	13.50	11.50	3575	CH33-50/60C-2F [4] G61MPV-60C-110	[2] **39L72**
41,500	13.50	11.50	3575	CH33-50/60C-2F [4] G71MPP-60C-110	[2] **39L72**
41,500	13.50	11.50	3615	CH33-50/60C-2F [4] G61MPV-60C-090	[2] **39L72**
41,500	13.50	11.50	3615	CH33-50/60C-2F [4] G71MPP-60C-090	[2] **39L72**
41,500	14.00	11.50	3610	CH33-49C-2F [4] G60UHV-60C-090	[2] **39L72**
41,500	14.00	11.50	3610	CH33-49C-2F [4] G60UHV-60C-110	[2] **39L72**
41,500	14.00	11.50	3610	CH33-49C-2F [4] G61MPV-60C-110	[2] **39L72**
41,500	14.00	11.50	3610	CH33-49C-2F [4] G71MPP-60C-110	[2] **39L72**
41,500	14.00	11.50	3610	CH33-49C-2F [4] G61MPV-60C-111	[2] **39L72**
41,500	14.00	11.50	3575	CH33-50/60C-2F [4] G60UHV-60C-090	[2] **39L72**

[1] Certified in accordance with USE certification program which is based on ARI Standard 210/240; 95°F outdoor air temperature, 80°F db / 67°F wb entering evaporator air with 25 ft. of connecting refrigerant lines.
[2] **Factory installed RFC or expansion valve on indoor unit MUST be replaced with expansion valve kit (ordered separately) or RFC (shipped with air conditioner) shown.**
[3] Blower must be capable of time-off blower delay. Indoor Blower Off Delay Relay (**58M81**) is recommended for field installation.
[4] Blower control must be set for a time-off blower delay.

ARI RATINGS

[1] ARI Standard 210/240 Ratings						
Cooling Capacity Btuh	Efficiency SEER	Efficiency EER	Total Unit Watts	Indoor Unit Model No.		Expansion Device
13ACX-042 WITH TXV						**3.5 TON**
Air Handlers				**Air Handlers**		
39,500	13.00	10.90	3605	[3] CBX32M-042 (Multi-Position)		[2] **39L72**
39,500	13.00	10.90	3620	[3] CBX32M-036 (Multi-Position)		[2] **39L72**
40,000	13.00	11.00	3635	CBX26UH-042 (Up-Flow/Horizontal)		Factory TXV
41,000	13.00	11.00	3715	[3] CBX32M-048 (Multi-Position)		[2] **39L72**
41,000	14.00	11.50	3565	[4] CBX27UH-048 (Up-Flow / Horizontal)		[2] **39L72**
41,500	14.00	11.50	3590	[4] CBX32MV-048 (Multi-Position)		[2] **39L72**
41,500	14.00	11.50	3610	[4] CBX27UH-042 (Up-Flow / Horizontal)		Factory TXV
13ACX-042 WITH RFC						**3.5 TON**
Up-Flow Indoor Coils				**Up-Flow Coils**		
41,500	13.00	10.80	3845	[3] C33-50/60C		[2] 0.076 (**97M78**)
41,500	13.00	10.90	3805	[3] C33-43B/C		[2] 0.076 (**97M78**)
41,500	13.00	11.00	3775	[3] C33-49C		[2] 0.076 (**97M78**)
Up-Flow Indoor Coils + Furnace				**Up-Flow Coils**	**+ Furnace**	
41,500	13.00	11.00	3775	C33-38B	[4] G61MPV-36B-070	[2] 0.076 (**97M78**)
41,500	13.00	11.00	3775	C33-38B	[4] G71MPP-36B-070	[2] 0.076 (**97M78**)
42,000	13.00	11.00	3820	C33-43B	[4] G61MPV-36B-070	[2] 0.076 (**97M78**)
42,000	13.00	11.00	3820	C33-43B	[4] G71MPP-36B-070	[2] 0.076 (**97M78**)
42,000	13.50	11.00	3820	C33-38B	[4] G60UHV-36B-090	[2] 0.076 (**97M78**)
42,000	13.50	11.50	3650	C33-43B	[4] G60UHV-36B-090	[2] 0.076 (**97M78**)
42,000	13.50	11.00	3820	C33-50/60C	[4] G61MPV-60C-090	[2] 0.076 (**97M78**)
42,000	13.50	11.00	3820	C33-50/60C	[4] G71MPP-60C-090	[2] 0.076 (**97M78**)
42,000	13.50	11.50	3650	C33-50/60C	[4] G61MPV-60C-110	[2] 0.076 (**97M78**)
42,000	13.50	11.50	3650	C33-50/60C	[4] G71MPP-60C-110	[2] 0.076 (**97M78**)
42,000	14.00	11.50	3650	C33-43C	[4] G60UHV-60C-090	[2] 0.076 (**97M78**)
42,000	14.00	11.50	3650	C33-43C	[4] G60UHV-60C-110	[2] 0.076 (**97M78**)
42,000	14.00	11.50	3650	C33-43C	[4] G61MPV-60C-110	[2] 0.076 (**97M78**)
42,000	14.00	11.50	3650	C33-43C	[4] G71MPP-60C-110	[2] 0.076 (**97M78**)
42,000	14.00	11.50	3650	C33-50/60C	[4] G60UHV-60C-090	[2] 0.076 (**97M78**)
42,000	14.00	11.50	3650	C33-50/60C	[4] G60UHV-60C-110	[2] 0.076 (**97M78**)
42,500	13.50	11.50	3695	C33-43C	[4] G61MPV-60C-090	[2] 0.076 (**97M78**)
42,500	13.50	11.50	3695	C33-43C	[4] G71MPP-60C-090	[2] 0.076 (**97M78**)
42,500	13.50	11.50	3695	C33-49C	[4] G61MPV-60C-090	[2] 0.076 (**97M78**)
42,500	13.50	11.50	3695	C33-49C	[4] G71MPP-60C-090	[2] 0.076 (**97M78**)
42,500	14.00	11.50	3695	C33-49C	[4] G60UHV-60C-090	[2] 0.076 (**97M78**)
42,500	14.00	11.50	3695	C33-49C	[4] G60UHV-60C-110	[2] 0.076 (**97M78**)
42,500	14.00	11.50	3695	C33-49C	[4] G61MPV-60C-110	[2] 0.076 (**97M78**)
42,500	14.00	11.50	3695	C33-49C	[4] G71MPP-60C-110	[2] 0.076 (**97M78**)

[1] Certified in accordance with USE certification program which is based on ARI Standard 210/240; 95°F outdoor air temperature, 80°F db / 67°F wb entering evaporator air with 25 ft. of connecting refrigerant lines.
[2] **Factory installed RFC or expansion valve on indoor unit MUST be replaced with expansion valve kit (ordered separately) or RFC (shipped with air conditioner) shown.**
[3] Blower must be capable of time-off blower delay. Indoor Blower Off Delay Relay (**58M81**) is recommended for field installation.
[4] Blower control must be set for a time-off blower delay.

ARI RATINGS

[1] ARI Standard 210/240 Ratings						
Cooling Capacity Btuh	Efficiency SEER	Efficiency EER	Total Unit Watts	Indoor Unit Model No.		Expansion Device
13ACX-042 WITH RFC						**3.5 TON**
Down-Flow Indoor Coils + Furnace				**Down-Flow Coils**	**+ Furnace**	
42,000	13.50	11.50	3650	CR33-50/60C-F	[4] G61MPV-60C-090	[2] 0.076 (**97M78**)
42,000	13.50	11.50	3650	CR33-50/60C-F	[4] G71MPP-60C-090	[2] 0.076 (**97M78**)
42,000	13.50	11.50	3650	CR33-50/60C-F	[4] G61MPV-60C-110	[2] 0.076 (**97M78**)
42,000	13.50	11.50	3650	CR33-50/60C-F	[4] G71MPP-60C-110	[2] 0.076 (**97M78**)
42,000	14.00	11.50	3650	CR33-50/60C-F	[4] G60DFV-60C-090	[2] 0.076 (**97M78**)
42,000	14.00	11.50	3650	CR33-60D-F	[4] G61MPV-60D-135	[2] 0.076 (**97M78**)
42,000	14.00	11.50	3650	CR33-60D-F	[4] G71MPP-60D-135	[2] 0.076 (**97M78**)
42,500	14.00	11.50	3695	CR33-50/60C-F	[4] G60DFV-60C-110	[2] 0.076 (**97M78**)
42,500	14.00	11.50	3695	CR33-60D-F	[4] G60DFV-60D-135	[2] 0.076 (**97M78**)
Horizontal Indoor Coils				**Horizontal Coils**		
41,500	13.00	10.80	3845	[3] CH33-48C-2F		[2] 0.076 (**97M78**)
42,000	13.00	11.00	3820	[3] CH33-43B/C-2F		[2] 0.076 (**97M78**)
42,000	13.00	11.00	3820	[3] CH33-49C-2F		[2] 0.076 (**97M78**)
42,000	13.00	11.00	3820	[3] CH33-50/60C-2F		[2] 0.076 (**97M78**)
Horizontal Indoor Coils + Furnace				**Horizontal Coils**	**+ Furnace**	
42,000	14.00	11.50	3650	CH33-43C-2F	[4] G60UHV-60C-090	[2] 0.076 (**97M78**)
42,000	13.50	11.00	3820	CH33-43C-2F	[4] G61MPV-36C-090	[2] 0.076 (**97M78**)
42,000	13.50	11.00	3820	CH33-43C-2F	[4] G71MPP-36C-090	[2] 0.076 (**97M78**)
42,000	13.50	11.50	3650	CH33-43C-2F	[4] G61MPV-60C-090	[2] 0.076 (**97M78**)
42,000	13.50	11.50	3650	CH33-43C-2F	[4] G71MPP-60C-090	[2] 0.076 (**97M78**)
42,000	13.50	11.00	3820	CH33-43C-2F	[4] G61MPV-60C-111	[2] 0.076 (**97M78**)
42,000	13.50	11.00	3820	CH33-48C-2F	[4] G61MPV-60C-090	[2] 0.076 (**97M78**)
42,000	13.50	11.00	3820	CH33-48C-2F	[4] G71MPP-60C-090	[2] 0.076 (**97M78**)
42,000	13.50	11.50	3650	CH33-48C-2F	[4] G61MPV-60C-110	[2] 0.076 (**97M78**)
42,000	13.50	11.50	3650	CH33-48C-2F	[4] G71MPP-60C-110	[2] 0.076 (**97M78**)
42,500	13.00	10.90	3900	CH33-43B-2F	[4] G61MPV-36B-045	[2] 0.076 (**97M78**)
42,500	13.00	11.00	3865	CH33-43B-2F	[4] G61MPV-36B-070	[2] 0.076 (**97M78**)
42,500	13.00	11.00	3865	CH33-43B-2F	[4] G71MPP-36B-070	[2] 0.076 (**97M78**)
42,500	13.00	11.00	3865	CH33-43B-2F	[4] G61MPV-36B-071	[2] 0.076 (**97M78**)
42,500	13.50	11.50	3695	CH33-43B-2F	[4] G60UHV-36B-090	[2] 0.076 (**97M78**)
42,500	13.50	11.50	3695	CH33-43C-2F	[4] G60UHV-60C-110	[2] 0.076 (**97M78**)
42,500	13.50	11.00	3865	CH33-43C-2F	[4] G61MPV-60C-091	[2] 0.076 (**97M78**)
42,500	13.50	11.50	3695	CH33-43C-2F	[4] G61MPV-60C-110	[2] 0.076 (**97M78**)
42,500	13.50	11.50	3695	CH33-43C-2F	[4] G71MPP-60C-110	[2] 0.076 (**97M78**)
42,500	13.50	11.00	3865	CH33-49C-2F	[4] G61MPV-36C-090	[2] 0.076 (**97M78**)
42,500	13.50	11.00	3865	CH33-49C-2F	[4] G71MPP-36C-090	[2] 0.076 (**97M78**)
42,500	13.50	11.50	3695	CH33-49C-2F	[4] G61MPV-60C-090	[2] 0.076 (**97M78**)
42,500	13.50	11.50	3695	CH33-49C-2F	[4] G71MPP-60C-090	[2] 0.076 (**97M78**)
42,500	13.50	11.50	3695	CH33-49C-2F	[4] G61MPV-60C-110	[2] 0.076 (**97M78**)
42,500	13.50	11.50	3695	CH33-49C-2F	[4] G71MPP-60C-110	[2] 0.076 (**97M78**)
42,500	13.50	11.50	3695	CH33-49C-2F	[4] G61MPV-60C-111	[2] 0.076 (**97M78**)
42,500	13.50	11.50	3695	CH33-50/60C-2F	[4] G61MPV-60C-090	[2] 0.076 (**97M78**)
42,500	13.50	11.50	3695	CH33-50/60C-2F	[4] G71MPP-60C-090	[2] 0.076 (**97M78**)
42,500	13.50	11.50	3695	CH33-50/60C-2F	[4] G61MPV-60C-110	[2] 0.076 (**97M78**)
42,500	13.50	11.50	3695	CH33-50/60C-2F	[4] G71MPP-60C-110	[2] 0.076 (**97M78**)
42,500	14.00	11.50	3695	CH33-49C-2F	[4] G60UHV-60C-090	[2] 0.076 (**97M78**)
43,000	13.50	11.00	3910	CH33-49C-2F	[4] G61MPV-60C-091	[2] 0.076 (**97M78**)
43,000	14.00	11.50	3740	CH33-49C-2F	[4] G60UHV-60C-110	[2] 0.076 (**97M78**)
43,000	14.00	11.50	3740	CH33-50/60C-2F	[4] G60UHV-60C-090	[2] 0.076 (**97M78**)

[1] Certified in accordance with USE certification program which is based on ARI Standard 210/240; 95°F outdoor air temperature, 80°F db / 67°F wb entering evaporator air with 25 ft. of connecting refrigerant lines.

[2] **Factory installed RFC or expansion valve on indoor unit MUST be replaced with expansion valve kit (ordered separately) or RFC (shipped with air conditioner) shown.**

[3] Blower must be capable of time-off blower delay. Indoor Blower Off Delay Relay (**58M81**) is recommended for field installation.

[4] Blower control must be set for a time-off blower delay.

ARI RATINGS

[1] ARI Standard 210/240 Ratings						
Cooling Capacity Btuh	Efficiency SEER	Efficiency EER	Total Unit Watts	Indoor Unit Model No.		Expansion Device
13ACX-048 WITH TXV						**4 TON**
Up-Flow Indoor Coils				**Up-Flow Coils**		
47,000	13.00	11.00	4255	[3] CX34-38A/B-6F		[2] **91M02**
47,000	13.00	11.00	4255	[3, 5] CX34-50/60C-6F		Factory TXV
47,500	13.00	11.00	4260	[3] CX34-43B/C-6F		[2] **91M02**
48,000	13.50	11.00	4265	[3] CX34-60D-6F		Factory TXV
48,000	13.50	11.00	4270	[3] CX34-49C-6F		Factory TXV
48,500	13.50	11.00	4270	[3] CX34-62D-6F		Factory TXV
49,000	13.50	11.50	4270	[3] CX34-62C-6F		Factory TXV
Up-Flow Indoor Coils + Furnace				**Up-Flow Coils**	**+ Furnace**	
47,000	13.50	11.00	4155	CX34-50/60C-6F	[4] G71MPP-60C-110	Factory TXV
47,000	13.50	11.00	4155	CX34-50/60C-6F	[4] G61MPV-60C-110	Factory TXV
47,000	13.50	11.00	4165	CX34-50/60C-6F	[4] G71MPP-60C-090	Factory TXV
47,000	13.50	11.00	4165	CX34-50/60C-6F	[4] G61MPV-60C-090	Factory TXV
47,500	13.50	11.50	4115	CX34-50/60C-6F	[4] G60UHV-60C-110	Factory TXV
47,500	13.50	11.50	4120	CX34-50/60C-6F	[4] G60UHV-60C-090	Factory TXV
47,500	13.50	11.50	4145	CX34-43C-6F	[4] G61MPV-60C-110	[2] **91M02**
47,500	13.50	11.50	4145	CX34-43C-6F	[4] G71MPP-60C-110	[2] **91M02**
47,500	13.50	11.50	4155	CX34-43C-6F	[4] G61MPV-60C-090	[2] **91M02**
47,500	13.50	11.50	4155	CX34-43C-6F	[4] G71MPP-60C-090	[2] **91M02**
47,500	14.00	11.50	4105	CX34-43C-6F	[4] G60UHV-60C-110	[2] **91M02**
48,000	14.00	11.50	4110	CX34-43C-6F	[4] G60UHV-60C-090	[2] **91M02**
48,500	14.00	11.50	4080	CX34-60D-6F	[4] G61MPV-60D-135	Factory TXV
48,500	14.00	11.50	4080	CX34-60D-6F	[4] G71MPP-60D-135	Factory TXV
48,500	14.00	11.50	4110	CX34-49C-6F	[4] G60UHV-60C-110	Factory TXV
48,500	14.00	11.50	4155	CX34-49C-6F	[4] G61MPV-60C-110	Factory TXV
48,500	14.00	11.50	4155	CX34-49C-6F	[4] G71MPP-60C-110	Factory TXV
48,500	14.00	11.50	4160	CX34-49C-6F	[4] G61MPV-60C-090	Factory TXV
48,500	14.00	11.50	4160	CX34-49C-6F	[4] G71MPP-60C-090	Factory TXV
48,500	14.00	12.00	4020	CX34-60D-6F	[4] G60UHV-60D-135	Factory TXV
49,000	14.00	11.50	4120	CX34-49C-6F	[4] G60UHV-60C-090	Factory TXV
49,000	14.00	11.50	4180	CX34-62C-6F	[4] G61MPV-60C-090	Factory TXV
49,000	14.00	11.50	4180	CX34-62C-6F	[4] G71MPP-60C-090	Factory TXV
49,000	14.00	12.00	4025	CX34-62D-6F	[4] G60UHV-60D-135	Factory TXV
49,000	14.00	12.00	4085	CX34-62D-6F	[4] G61MPV-60D-135	Factory TXV
49,000	14.00	12.00	4085	CX34-62D-6F	[4] G71MPP-60D-135	Factory TXV
49,500	14.00	11.50	4135	CX34-62C-6F	[4] G60UHV-60C-090	Factory TXV
49,500	14.00	11.50	4305	CX34-62C-6F	[4] G61MPV-60C-110	Factory TXV
49,500	14.00	11.50	4305	CX34-62C-6F	[4] G71MPP-60C-110	Factory TXV
49,500	14.00	12.00	4130	CX34-62C-6F	[4] G60UHV-60C-110	Factory TXV
Down-Flow Indoor Coils				**Down-Flow Coils**		
46,000	13.00	10.50	4255	[3] CR33-50/60C-F		[2] **91M02**
46,000	13.00	10.50	4255	[3] CR33-60D-F		[2] **91M02**

1 Certified in accordance with USE certification program which is based on ARI Standard 210/240; 95°F outdoor air temperature, 80°F db / 67°F wb entering evaporator air with 25 ft. of connecting refrigerant lines.

2 **Factory installed RFC or expansion valve on indoor unit MUST be replaced with expansion valve kit (ordered separately) or RFC (shipped with air conditioner) shown.**

3 Blower must be capable of time-off blower delay. Indoor Blower Off Delay Relay (**58M81**) is recommended for field installation.

4 Blower control must be set for a time-off blower delay.

5 Most popular indoor coil.

ARI RATINGS

[1] ARI Standard 210/240 Ratings						
Cooling Capacity Btuh	Efficiency SEER	Efficiency EER	Total Unit Watts	Indoor Unit Model No.		Expansion Device
13ACX-048 WITH TXV						**4 TON**
Down-Flow Indoor Coils + Furnace				**Down-Flow Coils**	**+ Furnace**	
46,500	13.50	11.00	4085	CR33-60D-F	[4] G61MPV-60D-135	[2] **91M02**
46,500	13.50	11.00	4085	CR33-60D-F	[4] G71MPP-60D-135	[2] **91M02**
46,500	13.50	11.00	4100	CR33-50/60C-F	[4] G60DFV-60C-110	[2] **91M02**
46,500	13.50	11.00	4140	CR33-50/60C-F	[4] G61MPV-60C-110	[2] **91M02**
46,500	13.50	11.00	4140	CR33-50/60C-F	[4] G71MPP-60C-110	[2] **91M02**
46,500	13.50	11.00	4145	CR33-50/60C-F	[4] G61MPV-60C-090	[2] **91M02**
46,500	13.50	11.00	4145	CR33-50/60C-F	[4] G71MPP-60C-090	[2] **91M02**
47,000	13.50	11.00	4100	CR33-50/60C-F	[4] G60DFV-60C-090	[2] **91M02**
47,000	13.50	11.50	4075	CR33-60D-F	[4] G60DFV-60D-135	[2] **91M02**
Horizontal Indoor Coils				**Horizontal Coils**		
47,000	13.00	11.00	4260	[3] CH33-44/48B-2F		[2] **91M02**
47,000	13.00	11.00	4260	[3] CH33-48C-2F		[2] **91M02**
47,500	13.00	11.00	4320	[3] CH33-43C-2F		[2] **91M02**
47,500	13.00	11.00	4265	[3] CH33-60D-2F		[2] **91M02**
47,500	13.50	11.00	4265	[3] CH23-68		[2] **91M02**
48,000	13.50	11.00	4365	[3] CH33-49C-2F		[2] **91M02**
48,000	13.50	11.00	4265	[3] CH33-50/60C-2F		[2] **91M02**
48,000	13.50	11.00	4365	[3] CH33-62D-2F		[2] **91M02**
Horizontal Indoor Coils + Furnace				**Horizontal Coils**	**+ Furnace**	
47,500	13.50	11.00	4320	CH33-43C-2F	[4] G61MPV-60C-090	[2] **91M02**
47,500	13.50	11.00	4320	CH33-43C-2F	[4] G71MPP-60C-090	[2] **91M02**
47,500	13.50	11.00	4320	CH33-43C-2F	[4] G61MPV-60C-091	[2] **91M02**
47,500	13.50	11.00	4320	CH33-43C-2F	[4] G61MPV-60C-110	[2] **91M02**
47,500	13.50	11.00	4320	CH33-43C-2F	[4] G71MPP-60C-110	[2] **91M02**
47,500	13.50	11.00	4320	CH33-43C-2F	[4] G61MPV-60C-111	[2] **91M02**
47,500	13.50	11.00	4180	CH33-48C-2F	[4] G61MPV-60C-090	[2] **91M02**
47,500	13.50	11.00	4180	CH33-48C-2F	[4] G71MPP-60C-090	[2] **91M02**
47,500	13.50	11.00	4180	CH33-48C-2F	[4] G61MPV-60C-110	[2] **91M02**
47,500	13.50	11.00	4180	CH33-48C-2F	[4] G71MPP-60C-110	[2] **91M02**
47,500	13.50	11.50	4135	CH33-48C-2F	[4] G60UHV-60C-110	[2] **91M02**
47,500	13.50	11.50	4140	CH33-48C-2F	[4] G60UHV-60C-090	[2] **91M02**
48,000	13.50	11.50	4175	CH33-43C-2F	[4] G60UHV-60C-110	[2] **91M02**
48,000	13.50	11.50	4185	CH33-50/60C-2F	[4] G61MPV-60C-090	[2] **91M02**
48,000	13.50	11.50	4185	CH33-50/60C-2F	[4] G71MPP-60C-090	[2] **91M02**
48,000	13.50	11.50	4185	CH33-50/60C-2F	[4] G61MPV-60C-110	[2] **91M02**
48,000	13.50	11.50	4185	CH33-50/60C-2F	[4] G71MPP-60C-110	[2] **91M02**
48,000	14.00	11.50	4175	CH33-43C-2F	[4] G60UHV-60C-090	[2] **91M02**
48,000	14.00	11.50	4040	CH33-60D-2F	[4] G60UHV-60D-135	[2] **91M02**
48,000	14.00	11.50	4040	CH23-68	[4] G60UHV-60D-135	[2] **91M02**
48,000	14.00	11.50	4095	CH33-60D-2F	[4] G61MPV-60D-135	[2] **91M02**
48,000	14.00	11.50	4095	CH33-60D-2F	[4] G71MPP-60D-135	[2] **91M02**
48,000	14.00	11.50	4095	CH23-68	[4] G61MPV-60D-135	[2] **91M02**
48,000	14.00	11.50	4095	CH23-68	[4] G71MPP-60D-135	[2] **91M02**
Horizontal Indoor Coils + Furnace				**Continued on Next Page**		

[1] Certified in accordance with USE certification program which is based on ARI Standard 210/240; 95°F outdoor air temperature, 80°F db / 67°F wb entering evaporator air with 25 ft. of connecting refrigerant lines.
[2] **Factory installed RFC or expansion valve on indoor unit MUST be replaced with expansion valve kit (ordered separately) or RFC (shipped with air conditioner) shown.**
[3] Blower must be capable of time-off blower delay. Indoor Blower Off Delay Relay (**58M81**) is recommended for field installation.
[4] Blower control must be set for a time-off blower delay.

ARI RATINGS

[1] ARI Standard 210/240 Ratings						
Cooling Capacity Btuh	Efficiency SEER	Efficiency EER	Total Unit Watts	Indoor Unit Model No.		Expansion Device
13ACX-048 WITH TXV						**4 TON**
Horizontal Indoor Coils + Furnace (Continued)				**Horizontal Coils**	**+ Furnace**	
48,000	14.00	11.50	4140	CH33-50/60C-2F	[4] G60UHV-60C-110	[2] **91M02**
48,500	13.50	11.00	4410	CH33-49C-2F	[4] G61MPV-60C-091	[2] **91M02**
48,500	13.50	11.50	4215	CH33-62D-2F	[4] G61MPV-60C-091	[2] **91M02**
48,500	14.00	11.50	4215	CH33-49C-2F	[4] G60UHV-60C-090	[2] **91M02**
48,500	14.00	11.50	4215	CH33-49C-2F	[4] G60UHV-60C-110	[2] **91M02**
48,500	14.00	11.50	4215	CH33-49C-2F	[4] G61MPV-60C-090	[2] **91M02**
48,500	14.00	11.50	4215	CH33-49C-2F	[4] G71MPP-60C-090	[2] **91M02**
48,500	14.00	11.50	4215	CH33-49C-2F	[4] G61MPV-60C-110	[2] **91M02**
48,500	14.00	11.50	4215	CH33-49C-2F	[4] G71MPP-60C-110	[2] **91M02**
48,500	14.00	11.50	4215	CH33-49C-2F	[4] G61MPV-60C-111	[2] **91M02**
48,500	14.00	11.50	4140	CH33-50/60C-2F	[4] G60UHV-60C-090	[2] **91M02**
48,500	14.00	11.50	4215	CH33-62D-2F	[4] G60UHV-60C-090	[2] **91M02**
48,500	14.00	11.50	4215	CH33-62D-2F	[4] G60UHV-60C-110	[2] **91M02**
48,500	14.00	11.50	4215	CH33-62D-2F	[4] G61MPV-60C-090	[2] **91M02**
48,500	14.00	11.50	4215	CH33-62D-2F	[4] G71MPP-60C-090	[2] **91M02**
48,500	14.00	11.50	4215	CH33-62D-2F	[4] G61MPV-60C-110	[2] **91M02**
48,500	14.00	11.50	4215	CH33-62D-2F	[4] G71MPP-60C-110	[2] **91M02**
48,500	14.00	11.50	4215	CH33-62D-2F	[4] G61MPV-60C-111	[2] **91M02**
48,500	14.00	12.00	4045	CH33-62D-2F	[4] G60UHV-60D-135	[2] **91M02**
48,500	14.00	11.50	4100	CH33-62D-2F	[4] G61MPV-60D-135	[2] **91M02**
48,500	14.00	11.50	4100	CH33-62D-2F	[4] G71MPP-60D-135	[2] **91M02**
Air Handlers				**Air Handlers**		
47,500	13.50	11.00	4145	[3] CBX32M-048 (Multi-Position)		Factory TXV
47,500	14.00	11.50	4130	[4] CBX27UH-048 (Up-Flow / Horizontal)		Factory TXV
47,500	14.00	11.50	4130	[4] CBX27UH-060 (Up-Flow / Horizontal)		Factory TXV
48,000	13.50	11.50	4145	[4] CBX32MV-048 (Multi-Position)		Factory TXV
48,500	13.50	11.50	4210	[3] CBX32M-060 (Multi-Position)		Factory TXV
48,500	14.00	11.50	4150	[4] CBX32MV-060 (Multi-Position)		Factory TXV
48,500	14.00	11.50	4190	CBX26UH-048 (Up-Flow/Horizontal)		Factory TXV
49,500	14.00	11.50	4195	[3] CBX32M-042 (Multi-Position)		Factory TXV
13ACX-048 WITH RFC						**4 TON**
Up-Flow Indoor Coils				**Up-Flow Coils**		
47,000	13.00	11.00	4275	[3] C33-38A/B		[2] 0.082 (**97M79**)
47,000	13.00	11.00	4275	[3] C33-50/60C		[2] 0.082 (**97M79**)
47,500	13.00	11.00	4320	[3] C33-43B/C		[2] 0.082 (**97M79**)
48,000	13.50	11.00	4365	[3] C33-49C		[2] 0.082 (**97M79**)
48,000	13.50	11.00	4365	[3] C33-60D		[2] 0.082 (**97M79**)
48,500	13.50	11.00	4410	[3] C33-62D		[2] 0.082 (**97M79**)
49,000	13.50	11.50	4260	[3] C33-62C		[2] 0.082 (**97M79**)

1 Certified in accordance with USE certification program which is based on ARI Standard 210/240; 95°F outdoor air temperature, 80°F db / 67°F wb entering evaporator air with 25 ft. of connecting refrigerant lines.

2 **Factory installed RFC or expansion valve on indoor unit MUST be replaced with expansion valve kit (ordered separately) or RFC (shipped with air conditioner) shown.**

3 Blower must be capable of time-off blower delay. Indoor Blower Off Delay Relay (**58M81**) is recommended for field installation.

4 Blower control must be set for a time-off blower delay.

ARI RATINGS

[1] ARI Standard 210/240 Ratings						
Cooling Capacity Btuh	Efficiency SEER	Efficiency EER	Total Unit Watts	Indoor Unit Model No.		Expansion Device
13ACX-048 WITH RFC						**4 TON**
Up-Flow Indoor Coils + Furnace				**Up-Flow Coils**	**+ Furnace**	
47,000	13.50	11.00	4275	C33-50/60C	[4] G61MPV-60C-090	[2] 0.082 (**97M79**)
47,000	13.50	11.00	4275	C33-50/60C	[4] G71MPP-60C-090	[2] 0.082 (**97M79**)
47,000	13.50	11.00	4275	C33-50/60C	[4] G61MPV-60C-110	[2] 0.082 (**97M79**)
47,000	13.50	11.00	4275	C33-50/60C	[4] G71MPP-60C-110	[2] 0.082 (**97M79**)
47,500	13.50	11.00	4320	C33-43C	[4] G61MPV-60C-090	[2] 0.082 (**97M79**)
47,500	13.50	11.00	4320	C33-43C	[4] G71MPP-60C-090	[2] 0.082 (**97M79**)
47,500	13.50	11.00	4320	C33-43C	[4] G61MPV-60C-110	[2] 0.082 (**97M79**)
47,500	13.50	11.00	4320	C33-43C	[4] G71MPP-60C-110	[2] 0.082 (**97M79**)
47,500	13.50	11.50	4130	C33-50/60C	[4] G60UHV-60C-090	[2] 0.082 (**97M79**)
47,500	13.50	11.50	4130	C33-50/60C	[4] G60UHV-60C-110	[2] 0.082 (**97M79**)
47,500	14.00	11.50	4130	C33-43C	[4] G60UHV-60C-110	[2] 0.082 (**97M79**)
48,000	14.00	11.50	4175	C33-43C	[4] G60UHV-60C-090	[2] 0.082 (**97M79**)
48,500	14.00	11.50	4215	C33-49C	[4] G60UHV-60C-110	[2] 0.082 (**97M79**)
48,500	14.00	11.50	4215	C33-49C	[4] G61MPV-60C-090	[2] 0.082 (**97M79**)
48,500	14.00	11.50	4215	C33-49C	[4] G71MPP-60C-090	[2] 0.082 (**97M79**)
48,500	14.00	11.50	4215	C33-49C	[4] G61MPV-60C-110	[2] 0.082 (**97M79**)
48,500	14.00	11.50	4215	C33-49C	[4] G71MPP-60C-110	[2] 0.082 (**97M79**)
48,500	14.00	11.50	4215	C33-60D	[4] G61MPV-60D-135	[2] 0.082 (**97M79**)
48,500	14.00	11.50	4215	C33-60D	[4] G71MPP-60D-135	[2] 0.082 (**97M79**)
48,500	14.00	12.00	4040	C33-60D	[4] G60UHV-60D-135	[2] 0.082 (**97M79**)
49,000	14.00	11.50	4260	C33-49C	[4] G60UHV-60C-090	[2] 0.082 (**97M79**)
49,000	14.00	11.50	4260	C33-62C	[4] G61MPV-60C-090	[2] 0.082 (**97M79**)
49,000	14.00	11.50	4260	C33-62C	[4] G71MPP-60C-090	[2] 0.082 (**97M79**)
49,000	14.00	12.00	4085	C33-62D	[4] G60UHV-60D-135	[2] 0.082 (**97M79**)
49,000	14.00	12.00	4085	C33-62D	[4] G61MPV-60D-135	[2] 0.082 (**97M79**)
49,000	14.00	12.00	4085	C33-62D	[4] G71MPP-60D-135	[2] 0.082 (**97M79**)
49,500	14.00	11.50	4305	C33-62C	[4] G60UHV-60C-090	[2] 0.082 (**97M79**)
49,500	14.00	11.50	4305	C33-62C	[4] G61MPV-60C-110	[2] 0.082 (**97M79**)
49,500	14.00	11.50	4305	C33-62C	[4] G71MPP-60C-110	[2] 0.082 (**97M79**)
49,500	14.00	12.00	4125	C33-62C	[4] G60UHV-60C-110	[2] 0.082 (**97M79**)
Down-Flow Indoor Coils				**Down-Flow Coils**		
46,000	13.00	10.50	4380	[3] CR33-50/60C-F		[2] 0.082 (**97M79**)
46,000	13.00	10.50	4380	[3] CR33-60D-F		[2] 0.082 (**97M79**)
Down-Flow Indoor Coils + Furnace				**Down-Flow Coils**	**+ Furnace**	
46,500	13.50	11.00	4225	CR33-50/60C-F	[4] G60DFV-60C-110	[2] 0.082 (**97M79**)
46,500	13.50	11.00	4225	CR33-50/60C-F	[4] G61MPV-60C-090	[2] 0.082 (**97M79**)
46,500	13.50	11.00	4225	CR33-50/60C-F	[4] G71MPP-60C-090	[2] 0.082 (**97M79**)
46,500	13.50	11.00	4225	CR33-50/60C-F	[4] G61MPV-60C-110	[2] 0.082 (**97M79**)
46,500	13.50	11.00	4225	CR33-50/60C-F	[4] G71MPP-60C-110	[2] 0.082 (**97M79**)
46,500	13.50	11.00	4225	CR33-60D-F	[4] G61MPV-60D-135	[2] 0.082 (**97M79**)
46,500	13.50	11.00	4225	CR33-60D-F	[4] G71MPP-60D-135	[2] 0.082 (**97M79**)
47,000	13.50	11.00	4275	CR33-50/60C-F	[4] G60DFV-60C-090	[2] 0.082 (**97M79**)
47,000	13.50	11.50	4085	CR33-60D-F	[4] G60DFV-60D-135	[2] 0.082 (**97M79**)

[1] Certified in accordance with USE certification program which is based on ARI Standard 210/240; 95°F outdoor air temperature, 80°F db / 67°F wb entering evaporator air with 25 ft. of connecting refrigerant lines.

[2] **Factory installed RFC or expansion valve on indoor unit MUST be replaced with expansion valve kit (ordered separately) or RFC (shipped with air conditioner) shown.**

[3] Blower must be capable of time-off blower delay. Indoor Blower Off Delay Relay (**58M81**) is recommended for field installation.

[4] Blower control must be set for a time-off blower delay.

ARI RATINGS

[1] ARI Standard 210/240 Ratings						
Cooling Capacity Btuh	Efficiency SEER	Efficiency EER	Total Unit Watts	Indoor Unit Model No.		Expansion Device
13ACX-048 WITH RFC						**4 TON**
Horizontal Indoor Coils				**Horizontal Coils**		
47,000	13.00	11.00	4275	[3] CH33-48C-2F		[2] 0.082 (**97M79**)
47,500	13.00	11.00	4320	[3] CH33-43C-2F		[2] 0.082 (**97M79**)
47,500	13.00	11.00	4320	[3] CH33-60D-2F		[2] 0.082 (**97M79**)
47,500	13.50	11.00	4320	[3] CH23-68		[2] 0.082 (**97M79**)
48,000	13.00	11.00	4365	[3] CH33-62D-2F		[2] 0.082 (**97M79**)
48,000	13.50	11.00	4365	[3] CH33-49C-2F		[2] 0.082 (**97M79**)
48,000	13.50	11.00	4365	[3] CH33-50/60C-2F		[2] 0.082 (**97M79**)
Horizontal Indoor Coils + Furnace				**Horizontal Coils**	**+ Furnace**	
47,500	13.50	11.00	4320	CH33-43C-2F	[4] G61MPV-60C-090	[2] 0.082 (**97M79**)
47,500	13.50	11.00	4320	CH33-43C-2F	[4] G71MPP-60C-090	[2] 0.082 (**97M79**)
47,500	13.50	11.00	4320	CH33-43C-2F	[4] G61MPV-60C-091	[2] 0.082 (**97M79**)
47,500	13.50	11.00	4320	CH33-43C-2F	[4] G61MPV-60C-110	[2] 0.082 (**97M79**)
47,500	13.50	11.00	4320	CH33-43C-2F	[4] G71MPP-60C-110	[2] 0.082 (**97M79**)
47,500	13.50	11.00	4320	CH33-48C-2F	[4] G60UHV-60C-090	[2] 0.082 (**97M79**)
47,500	13.50	11.00	4320	CH33-48C-2F	[4] G61MPV-60C-090	[2] 0.082 (**97M79**)
47,500	13.50	11.00	4320	CH33-48C-2F	[4] G71MPP-60C-090	[2] 0.082 (**97M79**)
47,500	13.50	11.00	4320	CH33-48C-2F	[4] G61MPV-60C-110	[2] 0.082 (**97M79**)
47,500	13.50	11.00	4320	CH33-48C-2F	[4] G71MPP-60C-110	[2] 0.082 (**97M79**)
47,500	13.50	11.50	4130	CH33-48C-2F	[4] G60UHV-60C-110	[2] 0.082 (**97M79**)
48,000	13.50	11.50	4175	CH33-43C-2F	[4] G60UHV-60C-110	[2] 0.082 (**97M79**)
48,000	13.50	11.00	4365	CH33-43C-2F	[4] G61MPV-60C-111	[2] 0.082 (**97M79**)
48,000	13.50	11.00	4365	CH33-50/60C-2F	[4] G61MPV-60C-090	[2] 0.082 (**97M79**)
48,000	13.50	11.00	4365	CH33-50/60C-2F	[4] G71MPP-60C-090	[2] 0.082 (**97M79**)
48,000	13.50	11.00	4365	CH33-50/60C-2F	[4] G61MPV-60C-110	[2] 0.082 (**97M79**)
48,000	13.50	11.00	4365	CH33-50/60C-2F	[4] G71MPP-60C-110	[2] 0.082 (**97M79**)
48,000	13.50	11.50	4175	CH33-62D-2F	[4] G61MPV-60C-091	[2] 0.082 (**97M79**)
48,000	14.00	11.50	4175	CH23-68	[4] G60UHV-60D-135	[2] 0.082 (**97M79**)
48,000	14.00	11.50	4175	CH23-68	[4] G61MPV-60D-135	[2] 0.082 (**97M79**)
48,000	14.00	11.50	4175	CH23-68	[4] G71MPP-60D-135	[2] 0.082 (**97M79**)
48,000	14.00	11.50	4175	CH33-43C-2F	[4] G60UHV-60C-090	[2] 0.082 (**97M79**)
48,000	14.00	11.50	4175	CH33-50/60C-2F	[4] G60UHV-60C-110	[2] 0.082 (**97M79**)
48,000	14.00	11.50	4175	CH33-60D-2F	[4] G60UHV-60D-135	[2] 0.082 (**97M79**)
48,000	14.00	11.50	4175	CH33-60D-2F	[4] G61MPV-60D-135	[2] 0.082 (**97M79**)
48,000	14.00	11.50	4175	CH33-60D-2F	[4] G71MPP-60D-135	[2] 0.082 (**97M79**)
48,000	14.00	11.50	4175	CH33-62D-2F	[4] G60UHV-60C-110	[2] 0.082 (**97M79**)
48,000	14.00	11.50	4175	CH33-62D-2F	[4] G61MPV-60C-090	[2] 0.082 (**97M79**)
48,000	14.00	11.50	4175	CH33-62D-2F	[4] G71MPP-60C-090	[2] 0.082 (**97M79**)
48,000	14.00	11.50	4175	CH33-62D-2F	[4] G61MPV-60C-110	[2] 0.082 (**97M79**)
48,000	14.00	11.50	4175	CH33-62D-2F	[4] G71MPP-60C-110	[2] 0.082 (**97M79**)
48,000	14.00	11.50	4175	CH33-62D-2F	[4] G61MPV-60C-111	[2] 0.082 (**97M79**)
48,500	14.00	11.50	4215	CH33-49C-2F	[4] G60UHV-60C-090	[2] 0.082 (**97M79**)
48,500	14.00	11.50	4215	CH33-49C-2F	[4] G60UHV-60C-110	[2] 0.082 (**97M79**)
Horizontal Indoor Coils + Furnace				**Continued on Next Page**		

1 Certified in accordance with USE certification program which is based on ARI Standard 210/240; 95°F outdoor air temperature, 80°F db / 67°F wb entering evaporator air with 25 ft. of connecting refrigerant lines.

2 **Factory installed RFC or expansion valve on indoor unit MUST be replaced with expansion valve kit (ordered separately) or RFC (shipped with air conditioner) shown.**

3 Blower must be capable of time-off blower delay. Indoor Blower Off Delay Relay (**58M81**) is recommended for field installation.

4 Blower control must be set for a time-off blower delay.

ARI RATINGS

[1] ARI Standard 210/240 Ratings						
Cooling Capacity Btuh	Efficiency SEER	Efficiency EER	Total Unit Watts	Indoor Unit Model No.		Expansion Device
13ACX-048 WITH RFC						**4 TON**
Horizontal Indoor Coils + Furnace (Continued)				**Horizontal Coils**	**+ Furnace**	
48,500	14.00	11.50	4215	CH33-49C-2F	[4] G61MPV-60C-090	[2] 0.082 (**97M79**)
48,500	14.00	11.50	4215	CH33-49C-2F	[4] G71MPV-60C-090	[2] 0.082 (**97M79**)
48,500	13.50	11.00	4410	CH33-49C-2F	[4] G61MPV-60C-091	[2] 0.082 (**97M79**)
48,500	14.00	11.50	4215	CH33-49C-2F	[4] G61MPV-60C-110	[2] 0.082 (**97M79**)
48,500	14.00	11.50	4215	CH33-49C-2F	[4] G71MPP-60C-110	[2] 0.082 (**97M79**)
48,500	14.00	11.50	4215	CH33-49C-2F	[4] G61MPV-60C-111	[2] 0.082 (**97M79**)
48,500	14.00	11.50	4215	CH33-50/60C-2F	[4] G60UHV-60C-090	[2] 0.082 (**97M79**)
48,500	14.00	11.50	4215	CH33-62D-2F	[4] G60UHV-60C-090	[2] 0.082 (**97M79**)
48,500	14.00	12.00	4040	CH33-62D-2F	[4] G60UHV-60D-135	[2] 0.082 (**97M79**)
48,500	14.00	11.50	4215	CH33-62D-2F	[4] G61MPV-60D-135	[2] 0.082 (**97M79**)
48,500	14.00	11.50	4215	CH33-62D-2F	[4] G71MPP-60D-135	[2] 0.082 (**97M79**)
13ACX-060 WITH TXV						**5 TON**
Up-Flow Indoor Coils				**Up-Flow Coils**		
59,000	13.00	11.00	5365	[3] CX34-49C-6F		Factory Installed
59,000	13.00	11.00	5365	[3] CX34-60D-6F		Factory Installed
60,000	13.50	11.00	5455	[3] CX34-62D-6F		Factory Installed
60,500	13.50	11.00	5500	[3] CX34-62C-6F		Factory Installed
Up-Flow Indoor Coils + Furnace				**Up-Flow Coils**	**+ Furnace**	
59,000	13.50	11.00	5365	CX34-49C-6F	[4] G60UHV-60C-110	Factory Installed
59,000	13.50	11.00	5365	CX34-49C-6F	[4] G61MPV-60C-110	Factory Installed
59,000	13.50	11.00	5365	CX34-49C-6F	[4] G71MPP-60C-110	Factory Installed
59,000	13.50	11.00	5365	CX34-49C-6F	[4] G61MPV-60C-111	Factory Installed
59,500	13.50	11.00	5410	CX34-49C-6F	[4] G60UHV-60C-090	Factory Installed
59,500	13.50	11.50	5175	CX34-60D-6F	[4] G61MPV-60D-135	Factory Installed
59,500	13.50	11.50	5175	CX34-60D-6F	[4] G71MPP-60D-135	Factory Installed
59,500	14.00	11.60	5175	CX34-60D-6F	[4] G60UHV-60D-135	Factory Installed
60,000	14.00	11.50	5215	CX34-62D-6F	[4] G61MPV-60D-135	Factory Installed
60,000	14.00	11.50	5215	CX34-62D-6F	[4] G71MPP-60D-135	Factory Installed
60,500	13.80	11.40	5305	CX34-62C-6F	[4] G61MPV-60C-111	Factory Installed
60,500	14.00	11.60	5260	CX34-62C-6F	[4] G60UHV-60C-110	Factory Installed
61,000	13.50	11.00	5545	CX34-62C-6F	[4] G61MPV-60C-090	Factory Installed
61,000	13.50	11.00	5545	CX34-62C-6F	[4] G71MPP-60C-090	Factory Installed
61,000	13.50	11.00	5545	CX34-62C-6F	[4] G61MPV-60C-091	Factory Installed
61,000	14.00	11.60	5305	CX34-62C-6F	[4] G60UHV-60C-090	Factory Installed
61,000	14.00	11.60	5305	CX34-62C-6F	[4] G61MPV-60C-110	Factory Installed
61,000	14.00	11.60	5260	CX34-62C-6F	[4] G71MPP-60C-110	Factory Installed
61,000	14.00	11.60	5305	CX34-62D-6F	[4] G60UHV-60D-135	Factory Installed
Down-Flow Indoor Coils				**Down-Flow Coils**		
58,500	13.00	11.00	5320	[3] CR33-60D-F		[2] **91M02**
Down-Flow Indoor Coils + Furnace				**Down-Flow Coils**	**+ Furnace**	
58,500	13.50	11.00	5320	CR33-60D-F	[4] G61MPV-60D-135	[2] **91M02**
58,500	13.50	11.00	5320	CR33-60D-F	[4] G71MPP-60D-135	[2] **91M02**
58,500	13.50	11.00	5320	CR33-60D-F	[4] G60UHV-60D-135	[2] **91M02**
59,000	13.50	11.00	5365	CR33-60D-F	[4] G60DFV-60D-135	[2] **91M02**

[1] Certified in accordance with USE certification program which is based on ARI Standard 210/240; 95°F outdoor air temperature, 80°F db / 67°F wb entering evaporator air with 25 ft. of connecting refrigerant lines.
[2] **Factory installed RFC or expansion valve on indoor unit MUST be replaced with expansion valve kit (ordered separately) or RFC (shipped with air conditioner) shown.**
[3] Blower must be capable of time-off blower delay. Indoor Blower Off Delay Relay (**58M81**) is recommended for field installation.
[4] Blower control must be set for a time-off blower delay.
[5] Most popular indoor coil.

ARI RATINGS

[1] ARI Standard 210/240 Ratings						
Cooling Capacity Btuh	Efficiency SEER	Efficiency EER	Total Unit Watts	Indoor Unit Model No.		Expansion Device
13ACX-060 WITH TXV						**5 TON**
Horizontal Indoor Coils				**Horizontal Coils**		
59,000	13.00	11.00	5365	[3] CH33-60D-2F		[2] **91M02**
59,000	13.00	11.00	5365	[3] CH33-62D-2F		[2] **91M02**
59,500	13.00	11.00	5410	[3] CH33-50/60C-2F		[2] **91M02**
60,000	13.50	11.00	5455	[3] CH23-68		[2] **91M02**
Horizontal Indoor Coils + Furnace				**Horizontal Coils**	**+ Furnace**	
58,500	13.00	11.00	5320	CH33-62D-2F	[4] G61MPV-60C-091	[2] **91M02**
59,000	13.00	11.00	5365	CH33-50/60C-2F	[4] G61MPV-60C-111	[2] **91M02**
59,000	13.50	11.00	5365	CH33-60D-2F	[4] G61MPV-60D-135	[2] **91M02**
59,000	13.50	11.00	5365	CH33-60D-2F	[4] G71MPP-60D-135	[2] **91M02**
59,000	13.50	11.00	5365	CH33-62D-2F	[4] G61MPV-60C-090	[2] **91M02**
59,000	13.50	11.00	5365	CH33-62D-2F	[4] G61MPV-60C-110	[2] **91M02**
59,000	13.50	11.00	5365	CH33-62D-2F	[4] G71MPP-60C-110	[2] **91M02**
59,000	13.50	11.00	5365	CH33-62D-2F	[4] G61MPV-60C-111	[2] **91M02**
59,500	13.50	11.00	5410	CH33-50/60C-2F	[4] G60UHV-60C-090	[2] **91M02**
59,500	13.50	11.00	5410	CH33-50/60C-2F	[4] G60UHV-60C-110	[2] **91M02**
59,500	13.00	11.00	5410	CH33-50/60C-2F	[4] G61MPV-60C-110	[2] **91M02**
59,500	13.50	11.00	5410	CH33-50/60C-2F	[4] G71MPP-60C-110	[2] **91M02**
59,500	13.50	11.00	5410	CH33-62D-2F	[4] G61MPV-60D-135	[2] **91M02**
59,500	13.50	11.00	5410	CH33-62D-2F	[4] G60UHV-60C-090	[2] **91M02**
59,500	13.50	11.00	5410	CH33-62D-2F	[4] G60UHV-60C-110	[2] **91M02**
60,000	13.50	11.00	5455	CH33-62D-2F	[4] G71MPP-60D-135	[2] **91M02**
60,000	13.50	11.50	5215	CH33-60D-2F	[4] G60UHV-60D-135	[2] **91M02**
60,000	14.00	11.50	5215	CH23-68	[4] G61MPV-60D-135	[2] **91M02**
60,000	14.00	11.50	5215	CH23-68	[4] G71MPP-60D-135	[2] **91M02**
60,000	14.00	11.60	5215	CH33-62D-2F	[4] G60UHV-60D-135	[2] **91M02**
61,000	14.00	11.60	5305	CH23-68	[4] G60UHV-60D-135	[2] **91M02**
Air Handlers				**Air Handlers**		
57,500	13.50	11.00	5225	[3] CBX32M-048 (Multi-Position)		Factory Installed
59,000	13.00	11.00	5365	[3] CBX32M-060 (Multi-Position)		Factory Installed
59,000	13.50	11.00	5365	CBX27UH-060 (Up-Flow / Horizontal)		Factory Installed
59,000	13.50	11.00	5365	[4] CBX32MV-048 (Multi-Position)		Factory Installed
59,500	13.50	11.00	5410	[4] CBX32MV-060 (Multi-Position)		Factory Installed
61,000	14.00	11.60	5305	[3] CBX26UH-060 (Up-Flow / Horizontal)		Factory Installed
13ACX-060 WITH RFC						**5 TON**
Up-Flow Indoor Coils				**Up-Flow Coils**		
59,000	13.00	11.00	5365	[3] C33-49C		[2] 0.093 (**11W11**)
59,500	13.00	11.00	5410	[3] C33-62D		[2] 0.093 (**11W11**)
60,000	13.00	11.00	5455	[3] C33-62C		[2] 0.093 (**11W11**)

[1] Certified in accordance with USE certification program which is based on ARI Standard 210/240; 95°F outdoor air temperature, 80°F db / 67°F wb entering evaporator air with 25 ft. of connecting refrigerant lines.
[2] **Factory installed RFC or expansion valve on indoor unit MUST be replaced with expansion valve kit (ordered separately) or RFC (shipped with air conditioner) shown.**
[3] Blower must be capable of time-off blower delay. Indoor Blower Off Delay Relay (**58M81**) is recommended for field installation.
[4] Blower control must be set for a time-off blower delay.

ARI RATINGS

[1] ARI Standard 210/240 Ratings						
Cooling Capacity Btuh	Efficiency SEER	Efficiency EER	Total Unit Watts	Indoor Unit Model No.		Expansion Device
13ACX-060 WITH RFC						**5 TON**
Up-Flow Indoor Coils + Furnace				**Up-Flow Coils**	**+ Furnace**	
59,000	13.00	11.00	5365	C33-49C	[4] G60UHV-60C-110	[2] 0.093 (**11W11**)
59,000	13.00	11.00	5365	C33-49C	[4] G71MPP-60C-110	[2] 0.093 (**11W11**)
59,000	13.00	11.00	5365	C33-60D	[4] G71MPP-60D-135	[2] 0.093 (**11W11**)
59,500	13.00	11.00	5410	C33-49C	[4] G60UHV-60C-090	[2] 0.093 (**11W11**)
59,500	13.00	11.00	5410	C33-49C	[4] G61MPV-60C-110	[2] 0.093 (**11W11**)
59,500	13.00	11.00	5410	C33-60D	[4] G61MPV-60D-135	[2] 0.093 (**11W11**)
60,000	13.50	11.50	5215	C33-60D	[4] G60UHV-60D-135	[2] 0.093 (**11W11**)
60,000	13.50	11.50	5215	C33-62D	[4] G61MPV-60D-135	[2] 0.093 (**11W11**)
60,000	13.50	11.50	5215	C33-62D	[4] G71MPP-60D-135	[2] 0.093 (**11W11**)
60,500	13.00	11.00	5500	C33-62C	[4] G61MPV-60C-090	[2] 0.093 (**11W11**)
60,500	13.00	11.00	5500	C33-62C	[4] G71MPP-60C-090	[2] 0.093 (**11W11**)
60,500	13.50	11.00	5500	C33-62C	[4] G61MPV-60C-110	[2] 0.093 (**11W11**)
60,500	13.50	11.00	5500	C33-62C	[4] G71MPP-60C-110	[2] 0.093 (**11W11**)
60,500	13.50	11.50	5260	C33-62C	[4] G60UHV-60C-110	[2] 0.093 (**11W11**)
61,000	13.50	11.50	5305	C33-62C	[4] G60UHV-60C-090	[2] 0.093 (**11W11**)
61,000	13.50	11.60	5260	C33-62D	[4] G60UHV-60D-135	[2] 0.093 (**11W11**)
Down-Flow Indoor Coils + Furnace				**Down-Flow Coils**	**+ Furnace**	
58,500	13.00	11.00	5320	CR33-60D-F	[4] G61MPV-60D-135	[2] 0.093 (**11W11**)
58,500	13.00	11.00	5320	CR33-60D-F	[4] G71MPP-60D-135	[2] 0.093 (**11W11**)
59,000	13.00	11.00	5365	CR33-60D-F	[4] G60DFV-60D-135	[2] 0.093 (**11W11**)
Horizontal Indoor Coils				**Horizontal Coils**		
59,000	13.00	11.00	5365	[3] CH33-62D-2F		[2] 0.093 (**11W11**)
59,500	13.00	11.00	5410	[3] CH23-68		[2] 0.093 (**11W11**)
Horizontal Indoor Coils + Furnace				**Horizontal Coils**	**+ Furnace**	
58,500	13.00	11.00	5320	CH33-60D-2F	[4] G61MPV-60D-135	[2] 0.093 (**11W11**)
58,500	13.00	11.00	5320	CH33-60D-2F	[4] G71MPP-60D-135	[2] 0.093 (**11W11**)
58,500	13.00	11.00	5320	CH33-62D-2F	[4] G61MPV-60C-090	[2] 0.093 (**11W11**)
59,000	13.00	11.00	5365	CH33-50/60C-2F	[4] G60UHV-60C-090	[2] 0.093 (**11W11**)
59,000	13.00	11.00	5365	CH33-50/60C-2F	[4] G60UHV-60C-110	[2] 0.093 (**11W11**)
59,000	13.00	11.00	5365	CH33-62D-2F	[4] G60UHV-60C-110	[2] 0.093 (**11W11**)
59,000	13.00	11.00	5365	CH33-62D-2F	[4] G61MPV-60C-110	[2] 0.093 (**11W11**)
59,000	13.00	11.00	5365	CH33-62D-2F	[4] G71MPP-60C-110	[2] 0.093 (**11W11**)
59,000	13.00	11.00	5365	CH33-62D-2F	[4] G61MPV-60D-135	[2] 0.093 (**11W11**)
59,000	13.00	11.00	5365	CH33-62D-2F	[4] G71MPP-60D-135	[2] 0.093 (**11W11**)
59,000	13.50	11.00	5365	CH33-62D-2F	[4] G60UHV-60C-090	[2] 0.093 (**11W11**)
59,000	13.50	11.50	5130	CH33-62D-2F	[4] G60UHV-60D-135	[2] 0.093 (**11W11**)
59,500	13.00	11.00	5410	CH33-60D-2F	[4] G60UHV-60D-135	[2] 0.093 (**11W11**)
60,000	13.50	11.50	5215	CH23-68	[4] G61MPV-60D-135	[2] 0.093 (**11W11**)
60,000	13.50	11.50	5215	CH23-68	[4] G71MPP-60D-135	[2] 0.093 (**11W11**)
60,500	13.50	11.50	5260	CH23-68	[4] G60UHV-60D-135	[2] 0.093 (**11W11**)

[1] Certified in accordance with USE certification program which is based on ARI Standard 210/240; 95°F outdoor air temperature, 80°F db / 67°F wb entering evaporator air with 25 ft. of connecting refrigerant lines.
[2] **Factory installed RFC or expansion valve on indoor unit MUST be replaced with expansion valve kit (ordered separately) or RFC (shipped with air conditioner) shown.**
[3] Blower must be capable of time-off blower delay. Indoor Blower Off Delay Relay (**58M81**) is recommended for field installation.
[4] Blower control must be set for a time-off blower delay.

REVISIONS

Sections	Description of Change
Features and Optional Accessories	Changed compressor crankcase heater from factory installed to a field installed accessory for the 13ACX-060.
Specifications	Changed coil information, outdoor fan data, refrigerant charge, shipping weight, hail guards and mounting bases for 13ACX-042-048-060.
Electrical Data	Changed outdoor fan motor data for 13ACX-042.
Dimensions	Changed dimensions for 13ACX-042-048-060.
ARI Ratings	New ratings for 13ACX-060.

Visit us at www.lennox.com
For the latest technical information, www.lennoxdavenet.com
Contact us at 1-800-4-LENNOX

NOTE - Due to Lennox' ongoing committment to quality, Specifications, Ratings and Dimensions subject to change without notice and without incurring liability.
Improper installation, adjustment, alteration, service or maintenance can cause property damage or personal injury.
Installation and service must be performed by a qualified installer and servicing agency.

©2008 Lennox Industries Inc.

VERSAMOUNT SERIES TUBE HEATERS

ENGINEERING SUBMITTAL DATA
SINGLE-STAGE LOW INTENSITY GAS-FIRED INFRA-RED TUBE HEATERS

WARNING! These heaters must be installed and serviced by trained gas heater installation and service personnel only! Improper installation, adjustment, alteration, service or maintenance can cause property damage, injury or death. Read the installation, operating, and maintenance instructions thoroughly before installing or servicing this equipment. Observe all safety information. Retain instructions for future reference.

MOST FREQUENTLY SPECIFIED MODELS

Additional C.S.A. design certified models are available in 5 MBTUH increments from the low MBTUH to high MBTUH listed for each heater length. See the online catalog at www.solaronics**usa**.com for additional models.

Straight Heater Length	5-foot Option ***	MBTUH	Natural Gas				LP / Propane Gas				Typical Mounting Height	Wt.**	U-Tube Heater Length
			Straight Heaters		U*		Straight Heaters		U*				
			Model #	Qty	U*	Qty	Model #	Qty	U*	Qty			
12'-1/4"	+5'	**40**	STG 40-10AN		U*+5'		STG 40-10AL		U*+5'		9' – 14'	135#	13'-4-1/4"
22'-1/4"	NA	**40**	STG 40-20AN		U*		STG 40-20AL		U*		9' – 14'	150#	13'-4-1/4"
22'-1/4"	NA	**50**	STG 50-20AN		U*		STG 50-20AL		U*		10' – 15'	150#	13'-4-1/4"
22'-1/4"	NA	**60**	STG 60-20AN		U*		STG 60-20AL		U*		10' – 15'	150#	13'-4-1/4"
22'-1/4"	+5'	**65**	STG 65-20MBN		U*		STG 65-20MBL		U*		11' – 16'	150#	13'-4-1/4"
22'-1/4"	+5'	**75**	STG 75-20MBN		U*		STG 75-20MBL		U*		11' – 16'	150#	13'-4-1/4"
22'-1/4"	+5'	**80**	STG 80-20MBN		U*		STG 80-20MBL		U*		11' – 18'	150#	13'-4-1/4"
22'-1/4"	+5'	**85**	STG 85-20MBN		U*		STG 85-20MBL		U*		11' – 18'	150#	13'-4-1/4"
32'-1/4"	+5'	**65**	STG 65-30BN		U*		STG 65-30BL		U*		11' – 16'	225#	18'-4-1/4"
32'-1/4"	+5'	**75**	STG 75-30BN		U*		STG 75-30BL		U*		11' – 16'	225#	18'-4-1/4"
32'-1/4"	+5'	**100**	STG 100-30BN		U*		STG 100-30BL		U*		12' – 20'	225#	18'-4-1/4"
32'-1/4"	+5'	**125**	STG 125-30MCN		U*		NA		NA		14' – 25'	225#	18'-4-1/4"
32'-1/4"	+5'	**130**	STG 130-30MCN		U*		NA		NA		15' – 27'	225#	18'-4-1/4"
42'-1/4"	NA	**65**	STG 65-40BN		U*		STG 65-40BL		U*		11' – 16'	275#	23'-4-1/4"
42'-1/4"	NA	**75**	STG 75-40BN		U*		STG 75-40BL		U*		11' – 16'	275#	23'-4-1/4"
42'-1/4"	+5'	**100**	STG 100-40BN		U*		STG 100-40BL		U*		12' – 20'	275#	23'-4-1/4"
42'-1/4"	+5'	**125**	STG 125-40BN		U*		STG 125-40CL		U*		14' – 25'	275#	23'-4-1/4"
42'-1/4"	+5'	**130**	STG 130-40CN		U*		STG 130-40CL		U*		15' – 27'	275#	23'-4-1/4"
42'-1/4"	+5'	**150**	STG 150-40CN		U*		STG 150-40CL		U*		16' – 30'	275#	23'-4-1/4"
52'-1/4"	NA	**100**	STG 100-50BN		U*		STG 100-50BL		U*		12' – 20'	350#	28'-4-1/4"
52'-1/4"	NA	**125**	STG 125-50BN		U*		STG 125-50CL		U*		14' – 25'	350#	28'-4-1/4"
52'-1/4"	NA	**130**	STG 130-50CN		U*		STG 130-50CL		U*		15' – 27'	350#	28'-4-1/4"
52'-1/4"	+5'	**150**	STG 150-50CN		U*		STG 150-50CL		U*		16' – 30'	350#	28'-4-1/4"
52'-1/4"	+5'	**175**	STG 175-50CN		U*		STG 175-50CL		U*		17' – 35'	350#	28'-4-1/4"
52'-1/4"	+5'	**200**	STG 200-50CN		U*		STG 200-50CL		U*		19' – 42'	350#	28'-4-1/4"
62'-1/4"	+5'	**150**	STG 150-60CN		U*		STG 150-60CL		U*		16' – 30'	400#	33'-4-1/4"
62'-1/4"	+5'	**175**	STG 175-60CN		U*		STG 175-60CL		U*		17' – 35'	400#	33'-4-1/4"
62'-1/4"	+5'	**200**	STG 200-60CN		U*		STG 200-60CL		U*		19' – 42'	400#	33'-4-1/4"
72'-1/4"	NA	**150**	STG 150-70CN		U*		STG 150-70CL		U*		16' – 30'	475#	38'-4-1/4"
72'-1/4"	NA	**175**	STG 175-70CN		U*		STG 175-70CL		U*		17' – 35'	475#	38'-4-1/4"
72'-1/4"	NA	**200**	STG 200-70CN		U*		STG 200-70CL		U*		19' – 42'	475#	38'-4-1/4"

Additional Models Specified:

MBTUH = 1000 BTU per hour.
NA = Not Available.
U* = U (STU) replaces G (STG) in the model number for U-tube heaters.
Wt.** = Shipping Weight. Add 25# to weight for U-tube heaters. Add 45# to weight for +5' option.
5-foot Option*** = +5' indicates a 5-foot heater section may be added to the straight heater models only.

Submitted by: _____ Date: _____

Job Title: _____

Address: _____ City: _____ State: _____ Zip: _____

Contractor: _____ Phone #: _____

Address: _____ City: _____ State: _____ Zip: _____

Engineer: _____

Local Representative: _____

Notes: _____

© 2006 **Solaronics, Inc.** 704 Woodward Ave., Rochester, Michigan MI 48307 U.S.A. Toll Free: 1-800-223-5335 Phone: 248-651-5333
Website: www.solaronics**usa**.com E-mail: sales@solaronics**usa**.com Fax: 248-651-0357

SPECIFICATIONS AND CLEARANCES

VERSAMOUNT SERIES SPECIFICATIONS

APPROVALS
- CSA International Design Certified, Report # 163199-1063506. AGA / CGA Approval.
- Indoor / Outdoor Approval.
- Commercial / Industrial Approval.

BURNER AND CONTROLS
- Blower thermally protected and permanently lubricated.
- Blower impeller balanced statically and dynamically.
- Controls isolated from combustion air.
- Safety differential pressure switch.
- Redundant gas safety shut-off 100%.
- Durable direct spark ignitor.
- Independent flame rod sensing.
- Sight glass for burner observation.
- 3 trials for ignition and automatic recycle after inadvertent shutdown.
- 3 validation lights: power on, air pressure normal & operation normal.
- Controls easily accessible – 3 sides.

HEAT EXCHANGER TUBES
- Heavy-duty 12 ga. 4" O.D. black steel for excellent heat transfer emissivity and durability.
- Turbulator baffle factory installed.
- 8" long clamps of 2 layers of 18 ga. aluminized steel with 4 clamping bolts.

COMBUSTION TUBES
- 4" O.D. Aluma Therm for excellent corrosion resistance.

REFLECTORS
- 91.7% reflectional efficiency.
- Brite finished aluminum.
- Rotate sections independently or continuous overlap.

POWER SUPPLY
- 120 VAC, 60 Hz, 1 phase.
- Maximum current draw is 3 amps.
- 3-prong plug power cord 36" long.

GAS CONNECTION
- ½" FPT gas inlet.

GAS SUPPLY (W.C.)	**NAT**	**LP**
• Manifold pressure		
40 to 100 MBTUH	3.5"	3.5"
105 to 200 MBTUH	5"	5"
• Minimum inlet pressure		
40 to 125 MBTUH	6"	11"
130 to 200 MBTUH	7"	11"
• Maximum inlet pressure	14"	14"

COMBUSTION AIR / VENTING
- Wall or roof venting – 4" diameter pipe up to 35 linear feet for 40 to 125 MBTUH units and up to 40 linear feet for 130 to 200 MBTUH units. (No more than two 90-degree elbows; one elbow equals 10 lineal feet.)

LIMITED WARRANTY
- 10 years on Burner Core.
- 10 years on **All** Heat Exchanger & Combustion Tubes.
- 2 years on **All** Burner Controls.

MADE IN THE USA

PHYSICAL DIMENSIONS

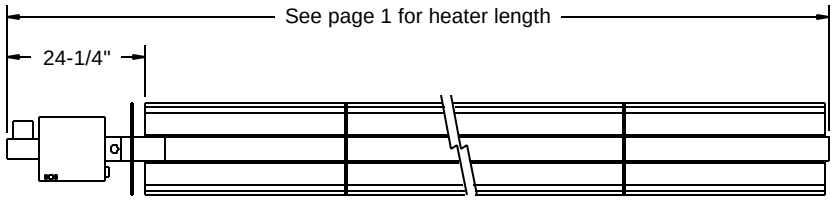

Straight Heater Bottom View

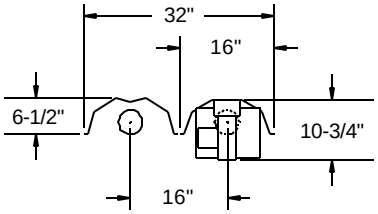

Burner End View of U-Tube Heater

CLEARANCES

CLEARANCES TO COMBUSTIBLES* (INCHES)					
MBTUH (1000 BTU per hour)	**MOUNTING ANGLE**	**FRONT**	**REAR**	**TOP**	**BELOW**
40, 45 & 50	0°-30°	40	40	12	40
	31°-45°	40	12	12	40
55 & 60	0°-30°	50	50	12	50
	31°-45°	50	12	12	50
65, 70, 75, 80, 85, 90, 95 & 100	0°-30°	24	24	12	60
105, 110, 115, 120 & 125	0°-30°	32	32	12	72
130, 135, 140, 145 & 150	0°-30°	48	48	12	82
	31°-45°	70	12	12	82
155, 160, 165, 170 & 175	0°-30°	58	58	12	92
	31°-45°	80	12	12	92
180, 185, 190, 195 & 200	0°-30°	68	68	12	102
	31°-45°	90	12	12	102

* FOR ALL SYSTEMS: 12" FROM BURNER END AND 68" FROM U-BEND.

0° MOUNTING

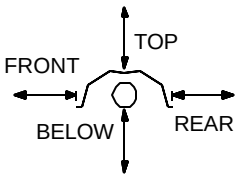

1°-30° MOUNTING

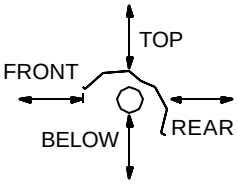

31°-45° MOUNTING

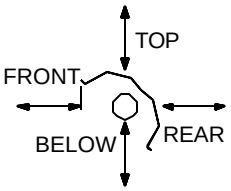

Solaronics, Inc. GAS INFRA-RED HEATERS

FIELD WIRING & ACCESSORIES

FIELD WIRING

ONE OR MORE HEATERS ON A SINGLE 120-VOLT THERMOSTAT

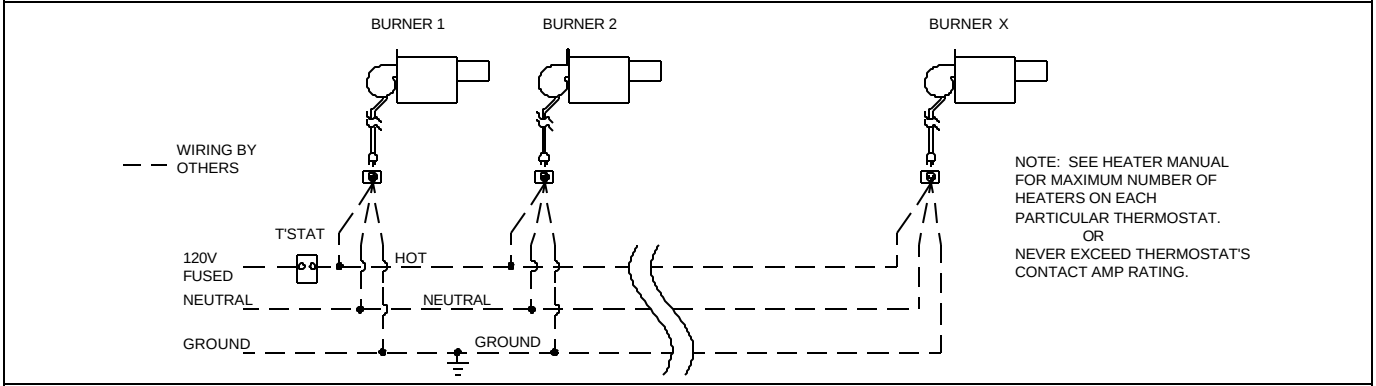

ONE OR MORE HEATERS ON A SINGLE 24-VOLT THERMOSTAT

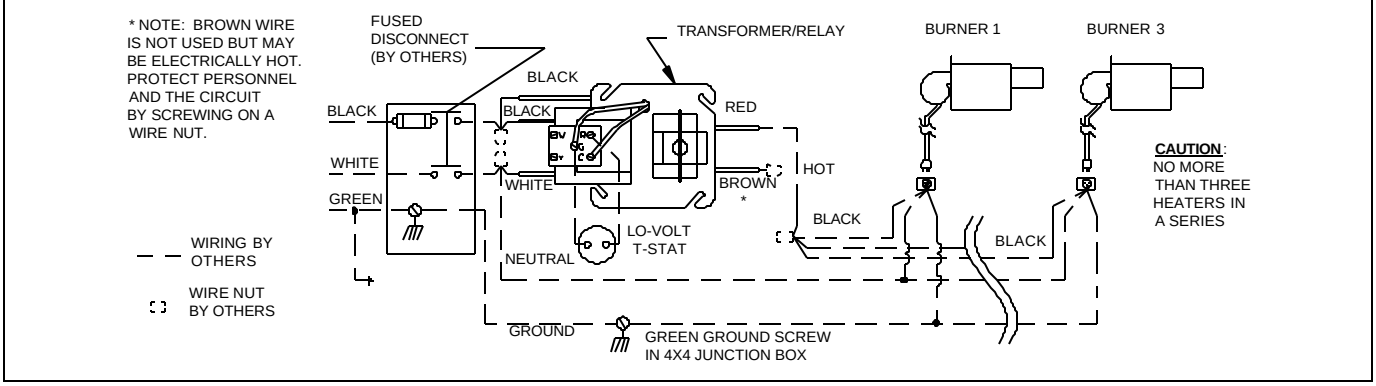

RECOMMENDED ACCESSORIES

QTY	ITEM #	DESCRIPTION	NOTES
	132026-4	Standard thermostat	(S-22 PO), (40-80F) 120V or 24V for heaters up to 2640VA total. Up to 7 heaters.
	CH-50	Mounting chain set	50 feet of chain plus 16 S-hooks.
	0002-10-046	Gas supply flex connector	24" long, stainless steel, ½" psi. max. with ½" gas cock & 1/8" tap.
	132237	4" wall vent kit for single heater	Required for single 4" wall vents. Tee, cap, screen & braces.
	131402	4" roof vent cap for single heater	Required for single 4" roof vents. Cap.
	131461	Indoor venting kit	Required for all units when operating unvented. Cap & elbow
	132336	4" wall air supply kit for single heater	Required for single 4" wall supply. Wall box, flex duct, sleeve & collar.

OTHER ACCESSORIES

QTY	ITEM #	DESCRIPTION	NOTES
	132654	Burner / Blower Enclosure	Protects blower in harsh environments. 5-way air access for all burners. Factory installed.
	132446	90-degree 4" OD tube elbow & clamp	For L-shaped heater. 16 ga. aluminized steel 90-degree elbow with tube clamp 132571.
	132448	45-degree 4" OD tube elbow & clamp	For angled heater. 16 ga. aluminized steel 45-degree elbow with tube clamp 132571.
	132486	Raintight 120V thermostat	(T115), (40-100F) NEMA-4X raintight, weather resistant, with stainless steel coil. Up to 5 htrs.
	0002-42-157	Night setback 120V thermostat	(PSPLV510), (50-90F) mechanical 120V for heaters up to 1920 VA total. Up to 5 heaters.
	0002-42-121	Night setback 24V thermostat	(PSP511), (45-90F) microelectronic) 24V for heaters up to 36VA total. Use with 0002-42-119.
	0002-42-119	120V transformer / relay	(8A94-2) Use with 132026-4, or 0002-42-121 for 24V thermostatic control of 120V heaters.
	0002-42-114	Plastic locking thermostat guard	Clear plastic guard, ID: 4.5"H x 7"W x 3"D.
	0002-42-115	Metal locking thermostat guard	Baked enamel finished metal guard, ID: 4.625"H x 7.125"W x 3.25"D.
	S132796	PVC coated gas flex connector	24" long, coated stainless steel for harsh environments, ½" psi. max., ½" gas cock & 1/8" tap.
	130828	4"x4"x5" Y-coupler for dual venting	Joins two (2) heaters to one common 5" vent using **one** thermostat. 16 ga. aluminized steel Y with (2) tube clamps 132571.
	132238	5" wall vent kit for venting 2 heaters	Required for common 5" wall vents. Tee, cap, screen & braces.
	132149	5" roof vent cap for venting 2 heaters	Required for common 5" roof vents. Cap.
	132746	4"x4"x6" Individual vent coupler (Y)	Joins two (2) heaters to one common 6" vent using **one or two** thermostats. Sheet metal.
	132239	6" wall vent kit for venting 2 heaters	Required for common 6" wall vents. Tee, cap, screen & braces.
	132150	6" roof vent cap for venting 2 heaters	Required for common 6" roof vents. Cap.
	132747	Vent cap for individual vent coupler	Required with 132746 to independently vent two (2) heaters thru one 6" roof vent when using **two** thermostats.
	132338	6" wall air supply kit for 2 heaters	Required for common 6" wall supply. 6" wall box, (2) 4" flex ducts, (2) 4" sleeves & (2) collars.
	132115	U-bend reflector assembly	Use when ordering U-tube heater. Includes (2) pipe hangers.
	131421	Corner reflector assembly	Use with 132446 elbow. Includes (2) pipe hangers.
	132481	Reflector side extension assembly	Reflector side guard to reduce side clearances. 5-foot long with S-hooks.
	132129	Parabolic reflector assembly	Focus radiant heat in one direction. 10-foot long with support brackets.
	132352	End cap for reflector	Cap for reflector at the end of the heater.

WRITTEN SPECIFICATIONS

SECTION 23 55 23 – FUEL-FIRED RADIANT HEATERS

PART 1 – GENERAL

1.1 RELATED DOCUMENTS

A. Drawings and general provisions of the Contract, including General and Supplementary Conditions, and Division 01 Specification Sections apply to this Section.

1.2 SUMMARY

A. Section includes:
   1. Gas-Fired Infra-Red Tube Heaters

B. Related Sections:
   1. Division 23, Section 23 10 00 "Facility Fuel Systems"
   2. Division 23, Section 23 51 00 "Breechings, Chimneys, and Stacks"

1.3 QUALITY ASSURANCE

A. Building Codes and Standards
   1. Gas-fired radiant tube heaters shall be Design Certified by CSA (American Gas Association and Canadian Gas Association) and comply with current ANSI, CAN/CSA and Occupational Safety and Health (OSHA) Requirements. The supplier shall provide the CSA Certification Number and the heaters shall bear the CSA Seal of Certification.
   2. Gas-fired radiant tube heaters shall be furnished and installed in accordance with local codes, building drawings and manufacturer's recommendations.

1.4 SUBMITTALS

A. The supplier shall furnish the owner/contractor with _____ copies of the engineering specification forms, showing physical dimensions, installation detail, recommendations, and field wiring.

1.5 WARRANTY

A. The supplier shall provide a manufacturer's published warranty covering the heater's burner core for a period of ten (10) years, heat exchanger and combustion chamber tubes for a period of ten (10) years, and all components utilized in the heater control assembly and hardware for a period of two (2) years.

PART 2 – PRODUCTS

2.1 MANUFACTURER

A. Gas-fired radiant tube heaters shall be SOLARONICS SUNTUBE IV VERSAMOUNT SERIES of the model numbers and inputs in MBTUH as manufactured by Solaronics, Inc. Rochester, Michigan 48307.

2.2 DESCRIPTION

A. Gas-fired radiant tube heaters shall be designed to satisfactorily operate at a minimum inlet pressure of: 6 inches W.C. for 40-125 MBTUH units, and 7 inches W.C. for 130-200 MBTUH units, when specified for natural gas; or 11 inches W.C. when specified for LP/propane gas; and at a maximum inlet pressure of 14 inches W.C.

B. Gas-fired radiant tube heaters shall be designed to operate without adjustments when burning natural gas having a heat value of 1000 BTU per cubic foot with a specific gravity of .65, or when burning LP/propane gas having a heat value of 2500 BTU per cubic foot with a specific gravity of 1.53.

2.3 CONSTRUCTION

A. The heater's controls shall be totally enclosed with a corrosion resistant housing. The controls shall be easily accessible from three sides by removing the cover. The burner core assembly shall be constructed of durable materials specially designed for high efficiency, maximum heat transfer, extremely quiet operation and extended life.

B. The heater's combustion chamber shall be 4" O.D. Aluma Therm (aluminized titanium alloy steel) or Aluma Therm finished with a high emissivity rated, corrosion resistant, black coating. Aluma Therm provides excellent mechanical properties at elevated temperatures and for corrosion / oxidation resistance is coated with 8% silicon/aluminum alloy, and shall meet MIL 500 hour salt spray test.

C. The heater's heat exchanger tube shall be heavy-duty 12 ga. (.109") wall thickness 4" O.D. black steel.

D. The heaters are CSA Design Certified for alternate construction utilizing radiant tubes of all Aluma Therm finished with a high emissivity rated, corrosion resistant, black coating.

E. The 4" O.D. tubes shall be joined by two layers of 18 ga. (.052") wall thickness aluminized steel tube clamp assembly and shall be a minimum of 8" in length for maximum support. Clamp shall be of a compression coupling design for uniform draw and pressure, and four (4) 5/8"-11x2" zinc plated carriage bolts and nuts to draw up (tighten to a minimum of 65 foot-pounds of torque).

F. The direct spark ignitor shall be durable to resist breakage.

G. Reflectors shall be .025" thick - #3003H25 aluminum brite finish with a geometrically designed configuration not having less than 91.7% reflectional efficiency, shall be held by a .229" diameter aluminized steel wire hanger. Hanger shall incorporate the geometric ability to rotate the reflector up to 45 degrees, in either direction from horizontal using the center of the combustion chamber or heat exchanger as the axis of rotation.

H. Each 5 or 10-foot reflector section shall have the ability to be independently rotated from all other 5 or 10-foot sections, or overlapped between 5 or 10-foot sections, or a combination of both over the entire length of the system. The heater's reflector hanging system shall be designed to permit expansion while minimizing noise and/or rattles. Reflectors shall be assembled to the heater without the use of tools.

I. Heaters shall utilize a downstream turbulator that shall be factory installed in the last ten (10) feet of heat exchanger, wave formed for optimal turbulation, acceleration and impingement of the products of combustion resulting in appropriate velocity pressure and momentum for maximum thermal efficiency.

J. Heaters shall be equipped with a sight glass permitting a visual inspection of the spark ignitor and burner operation from the floor.

K. Tube heaters shall be designed such that, at the customer's option, outside combustion air may be supplied without the use of additional supply fans.

L. Heaters shall be either directly vented outdoors with insulated flue pipe, or indirectly vented by positive air displacement of 4 CFM and one square inch of net free area per 1,000 BTUH input.

2.4 CONTROLS

A. Heater controls shall be isolated from combustion air to prevent corrosion from wet or dirty air.

B. Heaters shall be equipped with a direct spark ignition system with three (3) trials-for-ignition and upon loss of flame sensing three (3) re-trials-for-ignition. Flame sensing shall be via an independent sensing rod and circuit.

C. Power supplied to each burner shall be 120 VAC, 60 Hz. (Optional 50 Hz units available.) Maximum heater electrical current draw shall not exceed 3 amps.

D. The heater controls shall have a three (3) copper conductor electrical power cord extending a minimum of thirty-six (36) inches from the control box with a three (3) prong plug.

E. Heater controls shall include a safety differential pressure switch, factory set (non-field adjustable), to monitor combustion airflow, so as to provide complete burner shutdown due to insufficient combustion air or flue blockage.

F. The heater's control system shall be designed to shut off the gas flow to the burner in the event either a gas supply or power supply interruption occurs.

G. Combination gas control shall have a step open feature for softer ignition. Gas valve shut-off shall be of the redundant type. 100% safety shut-off.

H. The heater shall have an 1/8" – 27 FPT externally accessible inlet gas pressure test point.

I. The heater shall automatically recycle itself after an inadvertent shutdown.

J. The heater shall have three (3) system validation lights easily visible on the bottom of the burner housing. Lights shall validate "Power On," "Air Pressure Normal," and "Operation Normal."

K. The heater's blower motor shall be thermally protected, permanently lubricated and the blower motor's impeller shall be both statically and dynamically balanced.

L. The heater's airflow control system shall provide a pre-purge prior to initiating burner operation.

M. No condensation shall form as a result of combustion in the combustion chamber or heat exchanger tubes while at operating temperatures.

N. Total heater shutdown shall occur in the event of circuit control lockout, including burner operation and combustion air blower. An interruption of power (reset thermostat) will restart the firing sequence.

PART 3 – EXECUTION

3.1 INSTALLATION

A. Installation shall be in accordance with the requirements of the manufacturer.

B. An Installation, Operation, and Maintenance Manual shall be supplied with each heater.

BoosterpaQ®

Hydro MPC Controlled Booster Systems

BE > THINK > INNOVATE >

GRUNDFOS

Superior boosting with Grundfos BoosterpaQ

A Grundfos BoosterpaQ system fitted with Grundfos CRE – frequency converter-controlled pumps – ensures complete and instant control, optimum flexibility of booster output, and unbeatable efficiency.

Grundfos BoosterpaQ systems are manufactured to the highest standards in the industry. Our MPC controllers can handle even the most difficult boosting applications with ease and accuracy.

COMMITTED TO QUALITY

Commitment to quality is evident in every aspect of our BoosterpaQ systems. Based on the extremely reliable, high-efficiency CR pump range, BoosterpaQ solutions are fully integrated systems. Each component is made by Grundfos to meet the strictest quality requirements, so you can rest assured that all technologies involved in the process work perfectly together.

BOOSTERPAQ FEATURES

- Outstanding reliability
- High efficiency
- Fully integrated, all-in-one systems
- Systems to match every need and requirement
- Easy installation and operation
- Technology based on decades of know-how and experience

Grundfos CR pumps – state-of-the-art reliability and efficiency

The Grundfos Hydro MPC booster system ensures proper and constant water pressure at all times.

Grundfos BoosterpaQ systems are based on the world-renowned CR range of multistage centrifugal pumps. Grundfos was the first to develop this pump type nearly 40 years ago, and the current generation of CR pumps remains unchallenged as the world's best. With their history of outstanding reliability and efficiency, CR pumps provide the best foundation for our booster systems.

BoosterpaQ systems equipped with intelligent CRE pumps offer an even higher rate of efficiency as well as reduced energy costs. CRE pumps are equipped with an integrated variable-frequency drive motor. The end result is complete control, optimum flexibility of booster output, and unbeatable efficiency at all times.

THE COMPLETE SOLUTION

All components have been combined with focus on quality and efficiency. Grundfos BoosterpaQ systems are designed to last: sturdy, compact units with easy access to all service parts.

The Grundfos CR/CRE pumps have been engineered for maximum efficiency and reliability. These advantages are incorporated into Grundfos BoosterpaQ systems.

Grundfos BoosterpaQ systems can be used wherever additional pressure is needed. Each booster model has been designed to meet the customer's specific needs and requirements for capacity and control.

WATER SUPPLY

Our BoosterpaQ systems are ideal for water supply systems and pressure boosting in multi-story buildings, which can vary significantly throughout the day. These situations can place extraordinary demands on the equipment used. Grundfos booster systems make it easy to provide optimum comfort for the user by maintaining constant water pressure at all levels and at all times.

- **Industry**
  Industries can benefit greatly from using a Grundfos booster solution. If you require constant pressure in the face of highly variable flows, we have the solution. Even the most demanding applications will benefit from the accuracy and advanced pump control offered by our BoosterpaQ systems.

- **Irrigation**
  Grundfos BoosterpaQ systems can help conserve water and optimize crop yields by responding to pre-set minimum and maximum levels. BoosterpaQ systems go easy on piping networks in golf course irrigation systems and adapt performance automatically to any number of sprinklers at any pressure zone during the irrigation cycle. Benefits like these are what make Grundfos BoosterpaQ systems the perfect choice for your irrigation systems.

The Multi-Pump Control – MPC

THE "BRAINS" OF THE SYSTEM

The newly developed, highly advanced MPC control unit is the "brain" behind our BoosterpaQ systems. Specially designed for Grundfos boosters, the MPC is easy to operate and monitor.

The primary task of the MPC unit is to control the number of pumps in operation, as well as the speed of the individual pumps, in order to adjust the performance of the system to variations in demand. The MPC controller is capable of controlling up to six pumps connected in parallel.

Grundfos has used its experience with pump system controls to design the operation platform and control functions of the MPC to suit a wide range of application types.

The result is a highly advanced control system that offers multiple features and functions that can be used to improve the performance of the booster system while maintaining a user-friendly operator interface.

INSTALLATION WIZARD GETS YOU STARTED

Correct installation and commissioning of any booster system is a prerequisite for attaining optimum performance of the system and trouble-free operation.

Grundfos created an installation wizard to make it simple and straightforward to operate the BoosterpaQ. The installation wizard guides the operator through a sequence of instructions to ensure that all settings are made in the correct order and that system performance, as well as required protection settings (e.g. water-shortage protection), are set up step by step.

USER-FRIENDLY INTERFACE

Because ease of use was a top priority when developing the MPC controller, Grundfos designed a user interface that offers a wide range of features and functions that make operating the device intuitively simple.

- Large, backlit graphic display screen with overview of the system, including key measuring points
- Menu bar for easy navigation
- System information and status
- Control functions
- Cascade control
- Alternation
- Speed control
- Help funtion for each screen

DATA COMMUNICATION

The MPC is set up for various communication systems to help you monitor and control the unit from a distance.

- BUS communication
- Ethernet via built-in web server
- Grundfos GENI Bus for interface with other Grundfos products

Via the Ethernet connection, the Grundfos BoosterpaQ system can be operated from a remote computer where

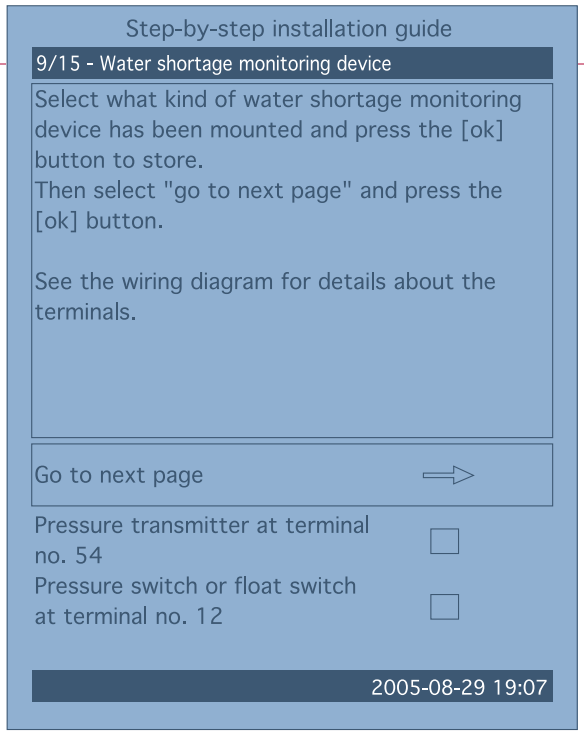

The Hydro MPC control unit features an installation wizard, which guides the user through a series of dialogue boxes on its large graphic display screen.

The Hydro MPC control unit offers maximum user friendliness with a large graphic display screen and menu bar for easy navigation.

the user will be able to view the control panel on their computer screen. This allows you to operate the booster system as easily as if you were standing in front of the actual control panel.

Remote monitoring and data acquisition is also possible. Status on individual pump and system levels, as well as operating conditions, settings, control mode, warnings, and alarms can be read out from a remote computer.

LOG AND STATISTICS

For full optimization of the booster system, it's important to ensure that valid operation data is obtained and continuously logged. The Grundfos MPC control offers easy access to a wide range of operating data and statistics, such as:

- System performance
- Energy consumption
- Alarm and warning log

Reliability, efficiency and adaptability

Grundfos boosters represent reliability, efficiency, and adaptability. Our boosters are the obvious choice for any application: they're built to last and feature a wide range of user benefits.

TRIED AND TESTED

At Grundfos, there are no compromises when it comes to quality. We use only the best materials and state-of the-art technologies, so you can have every confidence in the finished product. All components, as well as the finished product, have been carefully tried and tested before leaving the factory.

EFFICIENCY YOU CAN COUNT ON

Constant pressure at all levels is a vital feature of any booster system, whether it's installed in a multi-story building or in any industrial application. Grundfos booster systems offer constant-pressure control and can handle all variations in water consumption. Harmful peak pressures are avoided, which means less stress on the piping network and reduced water loss in the distribution circuit as less water is forced through leakages.

FULLY ADAPTABLE TO YOUR APPLICATION

Grundfos BoosterpaQ systems adapt to variations in demand at all levels and at any time. Whether in residential buildings or in industrial applications, a Grundfos booster system is capable of maintaining pre-set constant-pressure or required water or temperature levels. This capability prevents undesirable fluctuations and keeps energy consumption at the lowest level possible while reducing wear and tear on pipes and valves.

Grundfos BoosterpaQ systems offer constant-pressure control.

1

Loss of efficiency has been reduced to a minimum in the impeller stack of the Grundfos CR pumps. A floating seal ring has been applied as a perfect seal between the individual chambers.

2

An enhanced impeller/chamber design ensures a more streamlined flow. Tiny margins determine the success of the final result, so Grundfos developed a highly specialized, laser-welding technology in order to achieve the highest efficiency on the market for any multi-stage centrifugal pump.

Innovative technology

Only long-term savings are real savings, and Grundfos BoosterpaQ systems are created with this in mind. They combine innovative technology, exact capacity adjustment, low maintenance, and many other features that help to significantly reduce the total cost of owning a booster system over its lifetime.

PUMP TECHNOLOGY FOR SUPERIOR EFFICIENCY

At the heart of every Grundfos booster system you'll find a Grundfos CR or CRE pump. Decades of engineering experience have been applied to take the efficiency and reliability of these pumps to the highest level.

SUBSTANTIAL SAVINGS ON ENERGY COSTS

On average, the Grundfos CR pump models offer higher pump efficiency compared to any other multi-stage centrifugal pump on the market, which translates into energy savings for every CR pump. When pumps are in operation for several hours each day, improvements such as these provide substantial savings on energy costs year in and year out.

FAST AND EASY MAINTENANCE

The CR pumps used in Grundfos BoosterpaQ systems incorporate many features that make maintenance work easy and fast, thereby saving you time and money. For example, the patented shaft seal is remarkably durable and can be replaced in a matter of minutes and without the use of special tools.

Similar care and consideration has gone into the overall design of the entire system in order to make our boosters easy to install and service-friendly. Over time, this adds up to a substantial savings for you.

Unmatched reliability

BoosterpaQ systems are based on the Grundfos CR range of multi-stage centrifugal pumps, which offer efficiencies that are higher than any of our competitors models. This superior efficiency has been achieved through a unique hydraulic design that incorporates laser-welded impellers.

In addition, the Grundfos CR pumps are fitted with one of the industry's most reliable shaft seals, durable internal bearings, and most advanced rotating assembly available on the market today.

GRUNDFOS MOTOR: A PERFECT MATCH FOR YOUR BOOSTERPAQ

Grundfos manufactures its own three-phase motors (up to 10 hp) to ensure maximum performance. Grundfos ML motors are remarkably silent and highly efficient.

EASY-TO-REPLACE CARTRIDGE SEAL

CR pumps are fitted with a specially designed cartridge seal that increases reliability and enables easy access and quick service. For pumps with heavy motors (>10 hp), shaft seal replacement is possible without removing the motor.

SELECT YOUR PREFERRED MATERIAL

The CR is available in three different materials: stainless steel AISI 316, stainless steel AISI 304, and AISI 304/cast iron so you can choose a solution that best meets your needs. The CR's bearings are extremely durable, made of hardwearing materials, and offer options for handling difficult liquids.

The quality of our equipment and the sophisticated, user-friendly MPC control unit will supply you with the pressure you need, when you need it. So don't sweat the details: let our pumps do the work for you.

Grundfos CR pumps are available in three different materials: stainless steel AISI 316 or AISI 304, and an AISI 304/cast-iron combination for the handling of various types of media.

Standard or customized solution? Our skilled team of engineers would be more than happy to assist you.

Find what you need

Depending on how complex the actual situation is, you can choose from our standard range, mix components to create a customized solution, or have us create an entirely unique booster system almost from scratch.

Grundfos BoosterpaQ systems are available in various configurations to ensure that there's a model available for every conceivable application and to meet your specific requirements. The end result is a product range with an unparalleled degree of flexibility.

PRE-DEFINED SYSTEMS OR CUSTOMIZED SOLUTIONS?

The predefined range is comprised of our most popular BoosterpaQ models – and each one is exceptional in its own right.

Grundfos takes a unique mix-and-match approach to customized solutions: all the elements that make up a Grundfos booster system can be seen as modules which can be combined in countless ways to create the solution that is exactly right for the application at hand.

By combining the number and type of pumps, motor size, shaft seal materials, pump materials, control features, etc., it is possible to put together a booster system that fully matches the actual requirements of nearly all applications, regardless of the circumstances.

In the case of highly specific needs that cannot be met by our pre-defined range or customized solutions, which combine existing components, let us know. Our skilled team of engineers are available to create a solution unique to your application.

Grundfos CR pumps are equipped with a unique, easy-to-replace cartridge shaft seal that's available in a choice of materials. It can handle temperatures from -40°F to 250°F (consult factory for complete booster systems when the operating temperature is greater than 176° F).

Technical Information

FULL-LINE SUPPLIER

Grundfos is a full-line supplier of pressure boosting systems for multiple purposes. Whether it's building services or industry, Grundfos offers highly reliable systems that ensure sufficient supply and pressure at all levels.

For commercial buildings or industrial applications, Grundfos recommends the BoosterpaQ series, which is available in seven different models.

OTHER BOOSTER SYSTEMS

In addition to BoosterpaQ, Grundfos offers a range of other booster systems such as the CRE-Plus and Hydro Multi-E series. For further information and details on customization and accessories, please contact Grundfos.

Performance Overview	Speed control
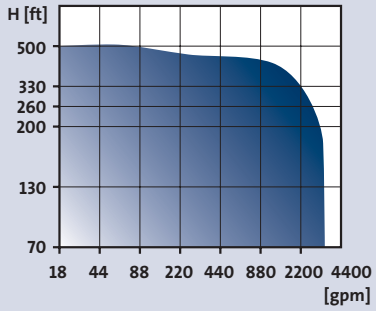	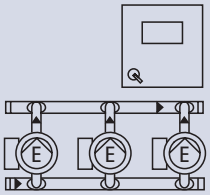

Range	Hydro MPC-E
Flow, gpm	1,800
Head, feet	520
Pump size, hp	1 - 10
Number of pumps	2 - 6
Mechanical version	
In-line piping	•
Cast iron/304SS pumps	•(1
Stainless steel piping	•
Stainless steel base frame	•
Control	
Big graphical display VGA 240 x 320 pixels	•
Display with backlight	•
Installation wizard	•
Pump change over	•
Integrated VFD on pump	•
VFD in control cabinet	
Redundancy on VFD	•
Bus communication	•
Ethernet connection	•
Accessories	
Diaphragm tank	•
Dry-running protection	•
System type benefits	
	Constant pressure
	All pumps variable speed
	Controlled ramp up on all pumps

by Grundfos E-pumps		Variable-speed control by VFD in control panel			On/Off
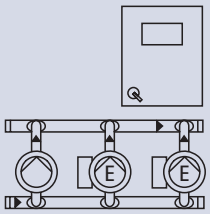	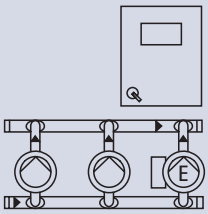	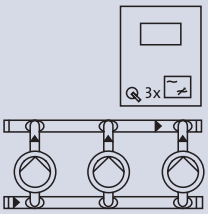	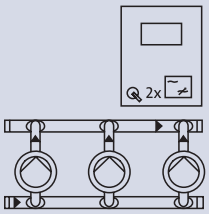	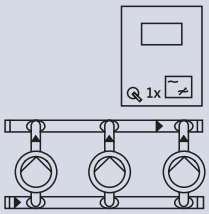	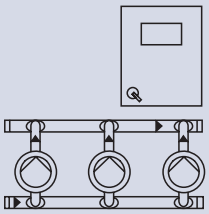
Hydro MPC-ED	Hydro MPC-ES	Hydro MPC-EF	Hydro MPC-EDF	Hydro MPC-F	Hydro MPC-S
1,800	1,800	3,800	3,800	3,800	3,800
520	520	520	520	520	520
1 - 10	1 - 10	1 - 50	1 - 50	1 - 50	1 - 50
3 - 6	2 - 6	2 - 6	3 - 6	2 - 6	2 - 6
•	•	•	•	•	•
•(1	•(1	•(1	•(1	•(1	•(1
•	•	•	•	•	•
•	•	•	•	•	•
•	•	•	•	•	•
•	•	•	•	•	•
•	•	•	•	•	•
•	•	•	•	•	•
•	•				
		•	•	•	
•		•	•		
•	•	•	•	•	•
•	•	•	•	•	•
•	•	•	•	•	•
•	•	•	•	•	•
Constant pressure	Constant pressure	Constant pressure	Constant pressure	Constant pressure	Constant pressure with a band
Two pumps variable speed	One pumps variable speed	All pumps variable speed	Two pumps variable speed	One pump variable speed	All pumps are fixed speed
Controlled ramp up on two pumps	Controlled ramp up on one pumps	Controlled ramp up on all pumps	Controlled ramp up on two pumps	Controlled ramp up on one pump	
Notes: (1 All stainless steel wetted parts on request					

General data: Liquid temperature: 32°F - 176°F · Operating pressure: max. 232 psi

BE > THINK > INNOVATE >

Being responsible is our foundation
Thinking ahead makes it possible
Innovation is the essence

Grundfos boosters – in a class of their own

Grundfos is one of the world's leading manufacturers of pumps and pumping systems and was the first company ever to develop a multistage in-line centrifugal pump. The current CR pump series remains second to none in terms of efficiency, reliability, and long-term operation costs.

These superior product features characterize the Grundfos range of BoosterpaQ systems and contribute to making Grundfos boosters the unrivaled market leaders, whether for commercial building projects or industrial applications.

Grundfos BoosterpaQ systems are fully integrated systems made to the very highest standards. The advanced MPC controller features a user-friendly interface, making these boosters capable of handling the most difficult jobs with ease and accuracy.

L-BPQ-SL-001 04/07 (US)
Subject to alterations

U.S.A.
GRUNDFOS Pumps Corporation
17100 West 118th Terrace
Olathe, Kansas 66061
Phone: (913) 227-3400
Telefax: (913) 227-3500

Canada
GRUNDFOS Canada Inc.
2941 Brighton Road
Oakville, Ontario
L6H 6C9
Phone: (905) 829-9533
Telefax: (905) 829-9512

Mexico
Bombas GRUNDFOS de Mexico S.A. de C.V.
Boulevard TLC No. 15
Parque Industrial Stiva Aeropuerto
C.P. 66600 Apodaca, N.L. Mexico
Phone: 011-52-81-8144 4000
Telefax: 011-52-81-8144 4010

www.grundfos.com

GRUNDFOS®

1. Manifolds 4" ANSI Class 150 AISI 316SS Schedule 10s ASTM A312 or ø114.3mm x2mm
2. Base/Frame AISI 304SS
3. Standard system layout : panel right facing suction.
4. Full port ball valve ASTM
5. NEMA 4 rated electrical panel

Note: panel size will vary with options

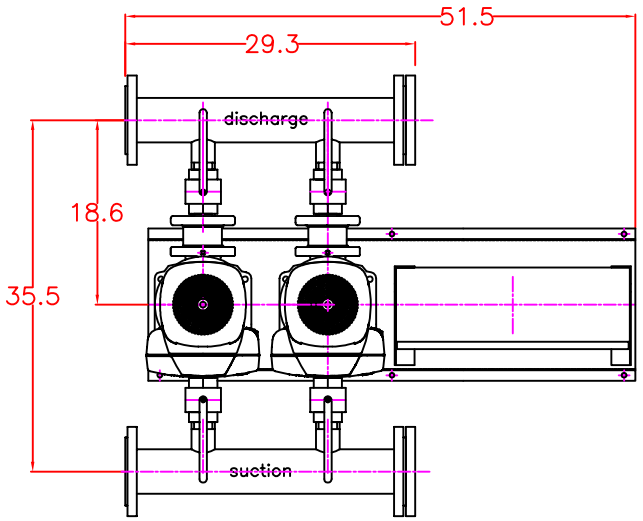

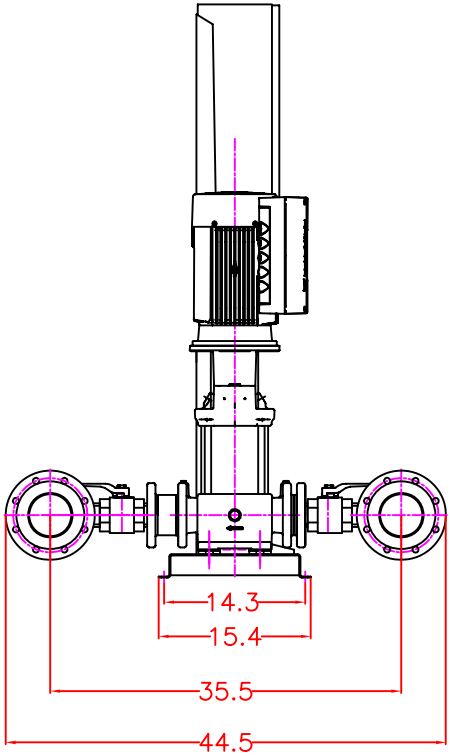

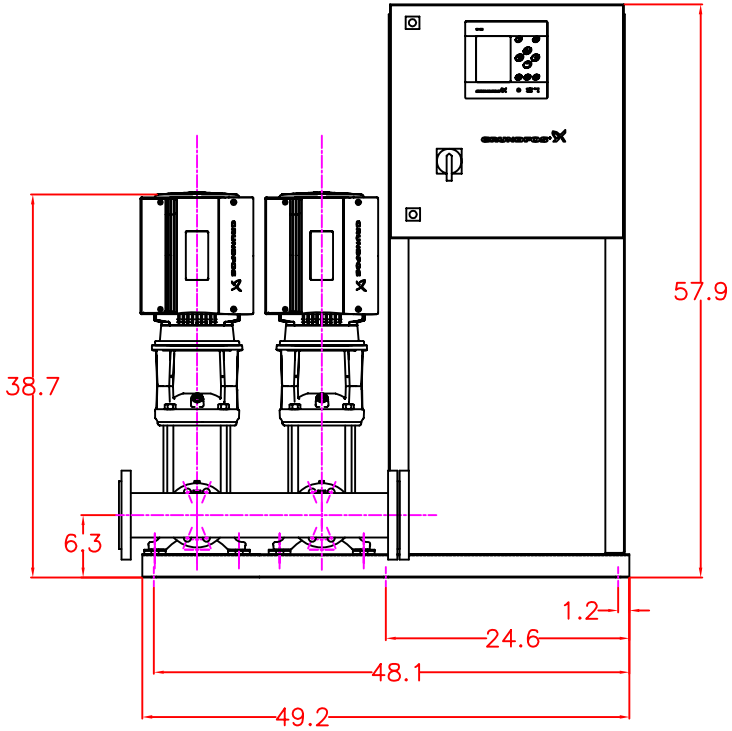

BoosterpaQ Model: MPC-E 2CRE 15-4 7.5hp				
Power: 460/3/60				
Job:				
Dwg No:	Rev: 2	Date: 6-22-05	Drawer: DC	Page: 1 of 1

Note:
All dimensions are ± 0.5"
Not for construction use.
All dimensions subject to change without notice.

GRUNDFOS

Detailed (line by line) lighting counts

Detailed line by line lighting counts follow for ECM 5.1. They are presented in the following order:

<u>ECM 5.1</u>

1. Middle Park High School
2. East Grand Middle School
3. Fraser Valley Elementary School
4. Granby Elementary School
5. Grand Lake Elementary School
6. Indian Peaks Charter School
7. District Office
8. Transportation Facility

BUILDING: Middle Park High School
LIGHTING CONTRACTOR: Contractor Name
ELECTRIC CONSUMPTION RATE: $0.05900 per kWh
ELECTRIC DEMAND RATE: $4.35 per kW
HEATING FUEL RATE: $8.290 per MMBtu

ECM 5.1: Lighting system upgrades

		EXISTING					PROPOSED								
AREA	USAGE TYPE	EXISTING FIXTURE DESCRIPTION	ANNUAL HOURS	Demand Div Factor	QTY	WATTS EACH*	RETROFIT DESCRIPTION	ANNUAL HOURS	Demand Div Factor	QTY	WATTS EACH**	UNIT PRICE	TOTAL EXTENDED PRICE	TOTAL KW SAVED	KWH SAVED PER YR
ENTRY VESTIBULE	Halls High School	1L42CF	4163	100%	2	42	NO RETRO	4163	100%	2	42	$0.00	$0.00	0.00	0
MAIN OFFICE	Common Admin	2L4T8-SP	2250	100%	4	58	NO RETRO	2250	100%	4	58	$0.00	$0.00	0.00	0
MAIN OFFICE	Common Admin	2L4T8-SP	2250	100%	1	58	2L4T8-SP-PCDIM	1875	50%	1	58	$91.41	$91.41	0.03	22
MAIN OFFICE	Common Admin	3L4T8-SP	2250	100%	2	85	NO RETRO	2250	100%	2	85	$0.00	$0.00	0.00	0
MAIN OFFICE	Common Admin	3L4T8-SP	2250	100%	2	85	3L4T8-SP-PCDIM	1875	50%	2	96	$154.61	$309.23	0.07	23
COPY AREA	Common Admin	2L4T8-SP	2250	100%	2	58	NO RETRO	2250	100%	2	58	$0.00	$0.00	0.00	0
COPY AREA	Common Admin	3L4T8-SP	2250	100%	1	85	NO RETRO	2250	100%	1	85	$0.00	$0.00	0.00	0
CONFERENCE ROOM	Conference	3L4T8-SP-DUAL	2250	40%	3	90	3L4T8-SP-DUAL-NR-OS	1575	30%	3	90	$0.00	$0.00	0.03	182
CONFERENCE ROOM	Conference	NOTHING	2250	40%	1	0	WSIR	2250	40%	1	0	$79.32	$79.32	0.00	0
PRINCIPAL OFFICE 101B	Offices, Private	3L4T8-SP-DUAL	2250	50%	4	90	3L4T8-SP-DUAL-NR-OS	1575	38%	4	90	$0.00	$0.00	0.05	243
PRINCIPAL OFFICE 101B	Offices, Private	NOTHING	2250	50%	1	0	WSDT	2250	50%	1	0	$114.31	$114.31	0.00	0
ASST PRINCIPAL 101C	Offices, Private	3L4T8-SP-DUAL	2250	50%	3	90	3L4T8-SP-DUAL-NR-OS	1008	38%	3	90	$0.00	$0.00	0.03	335
ASST PRINCIPAL 101C	Offices, Private	NOTHING	2250	50%	1	0	WSDT	1575	50%	1	0	$114.31	$114.31	0.00	0
ELECTRIC ROOM	Mechanical	4L4T8-SP	2250	10%	1	112	NO RETRO	2250	10%	1	112	$0.00	$0.00	0.00	0
RESTROOM	Private RR	1L42CF	2250	10%	2	42	1L42CF-NR-OS	1575	8%	2	42	$0.00	$0.00	0.00	57
RESTROOM	Private RR	NOTHING	2250	10%	1	0	WSIR	2250	10%	1	0	$79.32	$79.32	0.00	0
NUTRITION 103	Kitchen	3L4T8-SP	1000	90%	4	85	NO RETRO	1000	90%	4	85	$0.00	$0.00	0.00	0
CONCESSION 105	Storage	3L4T8-SP	1000	20%	2	85	NO RETRO	1000	20%	2	85	$0.00	$0.00	0.00	0
RRS	Private RR	1L42CF	1000	10%	3	42	NO RETRO	1000	10%	3	42	$0.00	$0.00	0.00	0
MENS RR	Halls High School	3L4T8-SP	4163	100%	3	85	NO RETRO	4163	100%	3	85	$0.00	$0.00	0.00	0
WOMENS RR	Halls High School	3L4T8-SP	4163	100%	6	85	NO RETRO	4163	100%	6	85	$0.00	$0.00	0.00	0
SOUTH GYM	Gym	8L42CF	2733	100%	45	372	8L42CF-NR-OS	1913	75%	45	372	$0.00	$0.00	4.19	13,725
SOUTH GYM	Gym	NOTHING	2733	100%	4	0	WCIR	2733	100%	4	0	$316.78	$1,267.12	0.00	0
SOUTH GYM	EM/Night	LED EXIT	8766	100%	3	3	NO RETRO	8766	100%	3	3	$0.00	$0.00	0.00	0
GYM STORAGE 607	Storage	4L4T8-SP	2250	20%	1	112	4L4T8-SP-NR-OS	1575	15%	1	112	$0.00	$0.00	0.01	76
GYM STORAGE 607	Storage	NOTHING	2250	20%	1	0	WSIR	2250	20%	1	0	$79.32	$79.32	0.00	0
GYM STOR/OFFICE 609	Offices, Private	4L4T8-SP	2250	50%	2	112	4L4T8-SP-NR-OS	1575	38%	2	112	$0.00	$0.00	0.03	151
GYM STOR/OFFICE 609	Offices, Private	NOTHING	2250	50%	1	0	WSDT	2250	50%	1	0	$114.31	$114.31	0.00	0
LOCKER ENTRY	Gym	1L42CF	2733	100%	4	42	NO RETRO	2733	100%	4	42	$0.00	$0.00	0.00	0
WOMENS LOCKERS	Gym	3L4T8-SP	2733	100%	9	85	NO RETRO	2733	100%	9	85	$0.00	$0.00	0.00	0
WOMENS LOCKERS	EM/Night	3L4T8-SP-EM	8766	100%	1	82	NO RETRO	8766	100%	1	82	$0.00	$0.00	0.00	0
WOMENS LOCKERS	EM/Night	LED EXIT	8766	100%	2	3	NO RETRO	8766	100%	2	3	$0.00	$0.00	0.00	0
WOMENS LOCKERS	Gym	1L42CF	2733	100%	2	42	NO RETRO	2733	100%	2	42	$0.00	$0.00	0.00	0
CUST / STOR	Storage	2L23CF	2250	20%	1	46	NO RETRO	2250	20%	1	46	$0.00	$0.00	0.00	0
MENS LOCKERS	Gym	3L4T8-SP	2733	100%	9	85	NO RETRO	2733	100%	9	85	$0.00	$0.00	0.00	0
MENS LOCKERS	EM/Night	3L4T8-SP-EM	8766	100%	1	82	NO RETRO	8766	100%	1	82	$0.00	$0.00	0.00	0
MENS LOCKERS	EM/Night	LED EXIT	8766	100%	2	3	NO RETRO	8766	100%	2	3	$0.00	$0.00	0.00	0
MENS LOCKERS	Gym	1L42CF	2733	100%	2	42	NO RETRO	2733	100%	2	42	$0.00	$0.00	0.00	0
CUST / STOR	Storage	2L23CF	2250	20%	1	46	NO RETRO	2250	20%	1	46	$0.00	$0.00	0.00	0
WEIGHT ROOM 611	Class	3L4T8-SP-OS	1987	100%	17	82	NO RETRO	1987	100%	17	82	$0.00	$0.00	0.00	0
WEIGHT ROOM 611	EM/Night	LED EXIT	8766	100%	1	3	NO RETRO	8766	100%	1	3	$0.00	$0.00	0.00	0
MECH 611A	Mechanical	4L4T8-SP	2250	10%	2	112	NO RETRO	2250	10%	2	112	$0.00	$0.00	0.00	0
OLD GYM	Gym	1L400HID	2733	100%	29	458	N6L4T8-HP-LNS-WG-OS	1913	75%	29	222	$438.15	$12,706.23	8.45	23,983
OLD GYM	Gym	NOTHING	2733	100%	4	0	WCIR	2733	100%	4	0	$316.78	$1,267.12	0.00	0
OLD GYM	EM/Night	LED EXIT	8766	100%	2	3	NO RETRO	8766	100%	2	3	$0.00	$0.00	0.00	0
GYM STORAGE 604A	Storage	3L4T12-EB-40W	2250	20%	4	105	2L4T8-SP-DLMP-OS	1575	15%	4	54	$35.47	$141.90	0.05	605
GYM STORAGE 604A	Storage	NOTHING	2250	20%	1	0	WSIR	2250	20%	1	0	$79.32	$79.32	0.00	0
GYM STORAGE MEZZ	Storage	2L8T8-SP	2250	20%	3	110	NO RETRO	2250	20%	3	110	$0.00	$0.00	0.00	0
WRESTLING ROOM 614	Class	2L8T8-SP	1987	100%	24	110	2L8T8-SP-NR-OS	1391	75%	24	110	$0.00	$0.00	0.66	1,573
WRESTLING ROOM 614	Class	NOTHING	1987	100%	2	0	WCIR	1987	100%	2	0	$256.93	$513.87	0.00	0
WRESTLING ROOM 614	EM/Night	LED EXIT	8766	100%	1	3	NO RETRO	8766	100%	1	3	$0.00	$0.00	0.00	0
GYM CORRIDOR	Halls High School	2L4T12-EB-40W	4163	100%	3	68	2L4T8-LP	4163	100%	3	48	$33.58	$100.74	0.06	250
GYM CORRIDOR	EM/Night	2L4T12-EB-40W-EM	8766	100%	1	68	2L4T8-LP-EM	8766	100%	1	48	$129.02	$129.02	0.02	175
GYM CORRIDOR	EM/Night	3L4T8-SP-EM	8766	100%	1	82	NO RETRO	8766	100%	1	82	$0.00	$0.00	0.00	0
GYM CORR VEST	Halls High School	2L13CF	4163	100%	1	26	NO RETRO	4163	100%	1	26	$0.00	$0.00	0.00	0
CLASS 618	Class	3L4T8-SP-DUAL	1987	100%	15	90	3L4T8-SP-DUAL-NR-OS	1391	75%	15	90	$0.00	$0.00	0.34	805
CLASS 618	Class	NOTHING	1987	100%	1	0	WCDT	1987	100%	1	0	$256.93	$256.93	0.00	0
TRAINING ROOM 616	Class	1L175HID	1987	100%	3	210	N4L4T8-HP-8TND-OS	1391	75%	3	151	$169.84	$509.52	0.29	622
TRAINING ROOM 616	Class	1L400HID	1987	100%	2	458	N4L4T8-HP-8TND-OS	1391	75%	2	151	$169.84	$339.68	0.69	1,400
TRAINING ROOM 618	Class	NOTHING	1987	100%	1	0	WCDT	1987	100%	1	0	$256.93	$256.93	0.00	0
TREATMENT 616A	Class	3L4T8-SP	1987	100%	2	85	3L4T8-SP-NR-OS	1391	75%	2	85	$0.00	$0.00	0.04	101
TREATMENT 616A	Class	NOTHING	1987	100%	1	0	WSIR	1987	100%	1	0	$79.32	$79.32	0.00	0
MENS LOCKER 612	Gym	2L4T12-EB-40W	2733	100%	10	68	2L4T8-LP-TG	2733	100%	10	48	$33.58	$335.81	0.20	547
MENS SHOWER	Gym	1L100IN	2733	100%	3	100	1L15CF	2733	100%	3	15	$13.16	$39.48	0.26	697
MENS COACH LKR 610	Offices, Private	2L4T12-EB-40W	2250	50%	1	68	2L4T8-LP-TG	2250	50%	1	48	$33.58	$33.58	0.01	45
MENS COACH OFF 608	Offices, Private	2L4T12-EB-40W	2250	50%	4	68	2L4T8-SP-OS	1575	38%	4	54	$33.58	$134.32	0.06	272
MENS COACH OFF 608	Offices, Private	NOTHING	2250	50%	1	0	WSIR	2250	50%	1	0	$79.32	$79.32	0.00	0
WOMENS COACH 606	Offices, Private	4L4T12-EB-40W	2250	50%	2	136	4L4T8-LP-OS	1575	38%	2	97	$45.11	$90.22	0.06	306
WOMENS COACH 606	Offices, Private	NOTHING	2250	50%	1	0	WSIR	2250	50%	1	0	$79.32	$79.32	0.00	0
WOMENS LOCKER 604	Gym	2L4T12-EB-40W	2733	100%	10	68	2L4T8-LP-TG	2733	100%	10	48	$33.58	$335.81	0.20	547
WOMENS SHOWER	Gym	1L100IN	2733	100%	3	100	1L15CF	2733	100%	3	15	$13.16	$39.48	0.26	697
WOMENS COACH LKR	Offices, Private	2L4T12-EB-40W	2250	50%	1	68	2L4T8-LP-TG	2250	50%	1	48	$33.58	$33.58	0.01	45
CUSTODIAL 502	Custodial	1L4T12-40W	2250	30%	1	43	1L4T8-SP	2250	30%	1	28	$31.45	$31.45	0.00	34
LAUNDRY 504	Custodial	1L4T12-40W	2250	30%	1	43	1L4T8-SP	2250	30%	1	28	$31.45	$31.45	0.00	34
CORR VEST	Halls High School	2L13CF	4163	100%	1	26	NO RETRO	4163	100%	1	26	$0.00	$0.00	0.00	0
ART CLASS 507	Class	2L8T8-SP	1987	100%	13	110	2L8T8-SP-NR-OS	1391	75%	13	110	$0.00	$0.00	0.36	852
ART CLASS 507	Class	2L4T12-EB-40W	1987	100%	6	68	2L4T8-SP-OS	1391	75%	6	54	$33.58	$201.49	0.17	360
ART CLASS 507	Class	NOTHING	1987	100%	1	0	WCDT	1987	100%	1	0	$256.93	$256.93	0.00	0
ART OFFICE	Offices, Private	2L4T12-EB-40W	2250	50%	2	68	2L4T8-SP-OS	1575	38%	2	54	$33.58	$67.16	0.03	136
ART OFFICE	Offices, Private	NOTHING	2250	50%	1	0	WSIR	2250	50%	1	0	$79.32	$79.32	0.00	0
ART STORAGE A	Storage	1L8T8-SP	2250	20%	1	70	1L8T8-SP-NR-OS	1575	15%	1	70	$0.00	$0.00	0.00	47
ART STORAGE A	Storage	NOTHING	2250	20%	1	0	WSIR	2250	20%	1	0	$79.32	$79.32	0.00	0
ART STORAGE B	Storage	1L8T8-SP	2250	20%	1	70	1L8T8-SP-NR-OS	1575	15%	1	70	$0.00	$0.00	0.00	47

ART STORAGE B	Storage	NOTHING	2250	20%	1	0	WSIR	2250	20%	1	0	$79.32	$79.32	0.00	0
ART DARK ROOM	Class	2L4T12-EB-40W	1987	100%	6	68	2L4T8-LP	1987	100%	6	48	$33.58	$201.49	0.12	238
ART RR	Private RR	2L100IN	2250	10%	1	200	N1L4T8-SP-4'WL	2250	10%	1	28	$121.87	$121.87	0.02	387
WELDING CLASS 505	Class	2L8T8-SP	1987	100%	14	110	NO RETRO	1987	100%	14	110	$0.00	$0.00	0.00	0
WELDING CLASS 505	Class	2L4T12-EB-40W	1987	100%	3	68	2L4T8-LP	1987	100%	3	48	$33.58	$100.74	0.06	119
WELDING CLASS 505	EM/Night	2L15EX	8766	100%	1	30	NLEDEX-G-B	8766	100%	1	3	$59.26	$59.26	0.03	237
WELDING OFFICE	Offices, Private	2L4T12-EB-40W	2250	50%	1	68	2L4T8-SP-OS	1575	38%	1	54	$33.58	$33.58	0.01	68
WELDING OFFICE	Offices, Private	NOTHING	2250	50%	1	0	WSIR	2250	50%	1	0	$79.32	$79.32	0.00	0
WELDING TOOL ROOM	Class	2L4T12-EB-40W	1987	100%	1	68	2L4T8-SP-OS	1391	75%	1	54	$33.58	$33.58	0.03	60
WELDING PROJECT RM	Class	2L8T8-SP	1987	100%	1	110	2L8T8-SP-NR-OS	1391	75%	1	110	$0.00	$0.00	0.03	66
DRAFTING 503	Class	2L4T12-EB-40W	1987	100%	13	68	2L4T8-SP-OS	1391	75%	13	54	$33.58	$436.55	0.36	780
DRAFTING 503	Class	NOTHING	1987	100%	1	0	WCDT	1987	100%	1	0	$256.93	$256.93	0.00	0
WOOD CLASS 513	Class	2L8T8-SP	1987	100%	19	110	NO RETRO	1987	100%	19	110	$0.00	$0.00	0.00	0
WOOD CLASS 513	EM/Night	2L15EX	8766	100%	1	30	NLEDEX-G-B	8766	100%	1	3	$59.26	$59.26	0.03	237
WOOD OFFICE	Offices, Private	2L4T12-EB-40W	2250	50%	1	68	2L4T8-SP-OS	1575	38%	1	54	$33.58	$33.58	0.01	68
WOOD OFFICE	Offices, Private	NOTHING	2250	50%	1	0	WSIR	2250	50%	1	0	$79.32	$79.32	0.00	0
WOOD PROJECT RM	Class	2L8T8-SP	1987	100%	2	110	NO RETRO	1987	100%	2	110	$0.00	$0.00	0.00	0
WOOD STORAGE	Class	1L8T8-SP	1987	100%	1	70	NO RETRO	1987	100%	1	70	$0.00	$0.00	0.00	0
WOOD TOOL ROOM	Class	1L4T12-40W	1987	100%	2	43	1L4T8-LP	1987	100%	2	25	$31.45	$62.89	0.04	72
WOOD FINISHING	Class	2L4T12-EB-40W	1987	100%	1	68	2L4T8-SP	1987	100%	1	54	$33.58	$33.58	0.01	28
MENS RESTROOM	Halls High School	2L4T12-EB-40W	4163	100%	6	68	REMOVE	4163	100%	6	0	$19.68	$118.07	0.41	1,699
MENS RESTROOM	Halls High School	NOTHING	4163	100%	3	0	N2L4T8-SP-8'WR	4163	100%	3	54	$161.94	$485.82	-0.16	-674
WOMENS RESTROOM	Halls High School	2L4T12-EB-40W	4163	100%	6	68	REMOVE	4163	100%	6	0	$19.68	$118.07	0.41	1,699
WOMENS RESTROOM	Halls High School	NOTHING	4163	100%	3	0	N2L4T8-SP-8'WR	4163	100%	3	54	$161.94	$485.82	-0.16	-674
KITCHEN	Kitchen	2L4T12-EB-40W	1000	100%	24	68	2L4T8-SP	1000	100%	24	54	$33.58	$805.94	0.34	336
KITCHEN	EM/Night	LED EXIT	8766	100%	1	3	NO RETRO	8766	100%	1	3	$0.00	$0.00	0.00	0
KITCHEN	Kitchen	2L4T12-EB-40W	1000	100%	1	68	2L4T8-LP	1000	100%	1	48	$33.58	$33.58	0.02	20
KITCHEN WHSE	Kitchen	1L8T8-SP	1000	100%	4	70	NO RETRO	1000	100%	4	70	$0.00	$0.00	0.00	0
KITCHEN WHSE	EM/Night	LED EXIT	8766	100%	1	3	NO RETRO	8766	100%	1	3	$0.00	$0.00	0.00	0
KITCHEN LAUNDRY	Kitchen	2L4T12-EB-40W	1000	100%	1	68	2L4T8-LP	1000	100%	1	48	$33.58	$33.58	0.02	20
KITCHEN RR	Private RR	2L100IN	2250	10%	1	200	N2L2T8-SP-2'WL	2250	10%	1	32	$147.88	$147.88	0.02	378
KITCHEN OFFICE	Offices, Private	2L4T12-EB-40W	2250	50%	1	68	2L4T8-SP-OS	1575	38%	1	54	$33.58	$33.58	0.01	68
KITCHEN OFFICE	Offices, Private	NOTHING	2250	50%	1	0	WSIR	2250	50%	1	0	$79.32	$79.32	0.00	0
CUST / MAINT OFF 302	Offices, Private	2L4T12-EB-40W	2250	50%	2	68	2L4T8-SP	1440	50%	2	54	$33.58	$67.16	0.01	150
CUST / MAINT OFF 302	Offices, Private	1L8T8-SP	2250	50%	3	70	NO RETRO	2250	50%	3	70	$0.00	$0.00	0.00	0
MECH / SHOP 304	Offices, Private	1L8T8-SP	2250	50%	7	70	NO RETRO	2250	50%	7	70	$0.00	$0.00	0.00	0
MECH / SHOP 304	Offices, Private	LED EXIT	2250	50%	1	3	NO RETRO	2250	50%	1	3	$0.00	$0.00	0.00	0
CLASS 306 ENTRY	Class	2L4T12-EB-40W	1987	100%	4	68	2L4T8-SP	1987	100%	4	54	$33.58	$134.32	0.06	111
CLASS 306 ENTRY	Class	NOTHING	1987	100%	1	0	CIR	1987	100%	1	0	$256.93	$256.93	0.00	0
CLASS 306	Class	2L4T12-EB-40W	1987	100%	12	68	2L4T8-SP-OS	1391	75%	12	54	$33.58	$402.97	0.33	720
CLASS 306	Class	NOTHING	1987	100%	1	0	WCDT	1987	100%	1	0	$256.93	$256.93	0.00	0
COOKING	Class	2L4T12-EB-40W	1987	100%	12	68	2L4T8-SP-OS	1391	75%	12	54	$33.58	$402.97	0.33	720
COOKING	Class	NOTHING	1987	100%	3	0	WCDT	1987	100%	3	0	$256.93	$770.80	0.00	0
LAUNDRY	Custodial	2L4T12-EB-40W	2250	30%	1	68	2L4T8-SP-OS	1575	23%	1	54	$33.58	$33.58	0.01	68
LAUNDRY	Custodial	NOTHING	2250	30%	1	0	WSIR	2250	30%	1	0	$79.32	$79.32	0.00	0
STAFF LOUNGE	Offices, Private	3L4T8-SP-DUAL	2250	50%	10	90	3L4T8-SP-DUAL-NR-OS	1575	38%	10	90	$0.00	$0.00	0.11	608
STAFF LOUNGE	Offices, Private	NOTHING	2250	50%	1	0	WCDT	2250	50%	1	0	$256.93	$256.93	0.00	0
MEDIA CENTER 212	Library	2L4T12-EB-40W	2000	90%	20	68	2L4T8-SP-HIGH	2000	90%	20	54	$39.95	$799.05	0.25	560
MEDIA CENTER 212	Library	2L4T12-EB-40W	2000	90%	18	68	2L4T8-SP	2000	90%	18	54	$33.58	$604.46	0.23	504
MEDIA CLASS AREA	Class	3L4T8-SP	1987	100%	9	85	3L4T8-SP-NR-OS	1391	75%	9	85	$0.00	$0.00	0.19	456
MEDIA CLASS AREA	Class	NOTHING	1987	100%	1	0	WCDT	1987	100%	1	0	$256.93	$256.93	0.00	0
MEDIA OFFICE	Offices, Private	2L4T12-EB-40W	2250	50%	2	68	2L4T8-SP-OS	1575	38%	2	54	$33.58	$67.16	0.03	136
MEDIA OFFICE	Offices, Private	NOTHING	2250	50%	1	0	WSIR	2250	50%	1	0	$79.32	$79.32	0.00	0
MEDIA WORK ROOM	Offices, Private	2L4T12-EB-40W	2250	50%	2	68	2L4T8-SP-OS	1575	38%	2	54	$33.58	$67.16	0.03	136
MEDIA WORK ROOM	Offices, Private	NOTHING	2250	50%	1	0	WSIR	2250	50%	1	0	$79.32	$79.32	0.00	0
MEDIA CORRIDOR	Halls High School	2L4T12-EB-40W	4163	100%	6	68	2L4T8-LP	4163	100%	6	48	$33.58	$201.49	0.12	500
OFFICE 214	Offices, Private	2L4T12-EB-40W	2250	50%	2	68	2L4T8-SP-OS	1575	38%	2	54	$33.58	$67.16	0.03	136
OFFICE 214	Offices, Private	NOTHING	2250	50%	1	0	WSIR	2250	50%	1	0	$79.32	$79.32	0.00	0
KITCHEN / BREAK	Offices, Private	2L4T12-EB-40W	2250	50%	1	68	2L4T8-SP-OS	1575	38%	1	54	$33.58	$33.58	0.01	68
KITCHEN / BREAK	Offices, Private	NOTHING	2250	50%	1	0	WSIR	2250	50%	1	0	$79.32	$79.32	0.00	0
STUDIO CLASS 309	Class	2L4T12-EB-40W	1987	100%	6	68	2L4T8-SP-OS	1391	75%	6	54	$33.58	$201.49	0.17	360
STUDIO CLASS 309	Class	NOTHING	1987	100%	1	0	WCDT	1987	100%	1	0	$256.93	$256.93	0.00	0
MENS RESTROOM	Halls High School	2L4T12-EB-40W	4163	100%	3	68	REMOVE	4163	100%	3	0	$19.68	$59.04	0.20	849
MENS RESTROOM	Halls High School	NOTHING	4163	100%	3	0	N1L4T8-SP-4'WR	4163	100%	3	28	$121.87	$365.62	-0.08	-350
WOMENS RESTROOM	Halls High School	2L4T12-EB-40W	4163	100%	3	68	REMOVE	4163	100%	3	0	$19.68	$59.04	0.20	849
WOMENS RESTROOM	Halls High School	NOTHING	4163	100%	3	0	N1L4T8-SP-4'WR	4163	100%	3	28	$121.87	$365.62	-0.08	-350
COMPUTER LAB 303	Class	2L4T12-EB-40W	1987	100%	11	68	2L4T8-SP-OS	1391	75%	11	54	$33.58	$369.39	0.30	660
COMPUTER LAB 303	Class	NOTHING	1987	100%	1	0	WCDT	1987	100%	1	0	$256.93	$256.93	0.00	0
OFFICE / SERVER 303A	Offices, Private	2L4T12-EB-40W	2250	50%	1	68	2L4T8-SP-OS	1575	38%	1	54	$33.58	$33.58	0.01	68
OFFICE / SERVER 303A	Offices, Private	NOTHING	2250	50%	1	0	WSIR	2250	50%	1	0	$79.32	$79.32	0.00	0
CLASS 301	Class	3L4T8-SP-DUAL	1987	100%	12	90	3L4T8-SP-DUAL-NR-OS	1391	75%	12	90	$0.00	$0.00	0.27	644
CLASS 301	Class	NOTHING	1987	100%	1	0	WCDT	1987	100%	1	0	$256.93	$256.93	0.00	0
CAREER CENTER 104	Common Admin	3L4T8-SP-DUAL	2250	100%	8	90	NO RETRO	2250	100%	8	90	$0.00	$0.00	0.00	0
CAREER OFFICE 104A	Offices, Private	2L4T12-EB-40W	2250	50%	2	68	2L4T8-SP-OS	1575	38%	2	54	$33.58	$67.16	0.03	136
CAREER OFFICE 104A	Offices, Private	NOTHING	2250	50%	1	0	WSDT	2250	50%	1	0	$114.31	$114.31	0.00	0
CAREER COPY RM 104B	Offices, Private	2L4T12-EB-40W	2250	50%	1	68	2L4T8-SP-OS	1575	38%	1	54	$33.58	$33.58	0.01	68
CAREER COPY RM 104B	Offices, Private	NOTHING	2250	50%	1	0	WSIR	2250	50%	1	0	$79.32	$79.32	0.00	0
CAREER CLASSROOM 104C	Offices, Private	2L4T12-EB-40W	2250	50%	6	68	2L4T8-LP-OS	1575	38%	6	48	$33.58	$201.49	0.10	464
CAREER CLASSROOM 104C	Offices, Private	NOTHING	2250	50%	1	0	WCDT	2250	50%	1	0	$256.93	$256.93	0.00	0
CAREER BREAK RM 104E	Offices, Private	2L4T12-EB-40W	2250	50%	1	68	2L4T8-SP-OS	1575	38%	1	54	$33.58	$33.58	0.01	68
CAREER BREAK RM 104E	Offices, Private	NOTHING	2250	50%	1	0	WSIR	2250	50%	1	0	$79.32	$79.32	0.00	0
CAREER AREA RRS	Private RR	2L100IN	2250	10%	2	200	N2L2T8-SP-2'WL	1575	10%	2	32	$147.88	$295.75	0.03	799
FILE ROOM	Offices, Private	2L4T12-EB-40W	2250	50%	2	68	2L4T8-SP-OS	1575	38%	2	54	$33.58	$67.16	0.03	136
FILE ROOM	Offices, Private	NOTHING	2250	50%	1	0	WSIR	2250	50%	1	0	$79.32	$79.32	0.00	0
CAREER OFFICE 104F	Offices, Private	3L4T8-SP-DUAL	2250	50%	3	90	3L4T8-SP-DUAL-NR-OS	1575	38%	3	90	$0.00	$0.00	0.03	182
CAREER OFFICE 104F	Offices, Private	NOTHING	2250	50%	1	0	WSDT	2250	50%	1	0	$114.31	$114.31	0.00	0
CLINIC 102	Common Admin	3L4T8-SP-DUAL	2250	100%	6	90	NO RETRO	2250	100%	6	90	$0.00	$0.00	0.00	0
CLINIC RR	Private RR	2L100IN	2250	10%	1	200	N2L2T8-SP-2'WL	1575	10%	1	32	$147.88	$147.88	0.02	400
SPECIAL ED CLASS 202	Class	3L4T8-SP-DUAL-OS	1987	100%	8	82	NO RETRO	1987	100%	8	82	$0.00	$0.00	0.00	0
SPED FILE ROOM	Storage	3L4T8-SP	2250	20%	1	85	NO RETRO	2250	20%	1	85	$0.00	$0.00	0.00	0
SPED RR	Private RR	3L4T8-SP	2250	10%	1	85	NO RETRO	2250	10%	1	85	$0.00	$0.00	0.00	0
SPED OFFICE	Private RR	3L4T8-SP	2250	10%	2	85	NO RETRO	2250	10%	2	85	$0.00	$0.00	0.00	0
COMPUTER LAB 204	Class	2L4T12-EB-40W	1987	100%	11	68	2L4T8-SP-OS	1391	75%	11	54	$33.58	$369.39	0.30	660
COMPUTER LAB 204	Class	NOTHING	1987	100%	1	0	WCDT	1987	100%	1	0	$256.93	$256.93	0.00	0
TECH OFFICE	Offices, Private	2L4T12-EB-40W	2250	50%	2	68	2L4T8-SP-OS	1575	38%	2	54	$33.58	$67.16	0.03	136
TECH OFFICE	Offices, Private	NOTHING	2250	50%	1	0	WSIR	2250	50%	1	0	$79.32	$79.32	0.00	0
MENS RESTROOM	Halls High School	2L4T12-EB-40W	4163	100%	3	68	REMOVE	4163	100%	3	0	$19.68	$59.04	0.20	849

MENS RESTROOM	Halls High School	NOTHING	4163	100%	3	0	N1L4T8-SP-4'WR	4163	100%	3	28	$121.87	$365.62	-0.08	-350
WOMENS RESTROOM	Halls High School	2L4T12-EB-40W	4163	100%	3	68	REMOVE	4163	100%	3	0	$19.68	$59.04	0.20	849
WOMENS RESTROOM	Halls High School	NOTHING	4163	100%	3	0	N1L4T8-SP-4'WR	4163	100%	3	28	$121.87	$365.62	-0.08	-350
COMPUTER STOR 215	Storage	2L4T12-EB-40W	2250	20%	2	68	2L4T8-SP-OS	1575	15%	2	54	$33.58	$67.16	0.01	136
COMPUTER STOR 215	Storage	NOTHING	2250	20%	1	0	WSIR	2250	20%	1	0	$79.32	$79.32	0.00	0
CUSTODIAL 217	Custodial	2L4T12-40W	2250	30%	1	86	2L4T8-SP-OS	1575	23%	1	54	$33.58	$33.58	0.01	108
CUSTODIAL 217	Custodial	NOTHING	2250	30%	1	0	WSIR	2250	30%	1	0	$79.32	$79.32	0.00	0
STORAGE 217	Storage	2L4T12-EB-40W	2250	20%	1	68	2L4T8-SP-OS	1575	15%	1	54	$33.58	$33.58	0.01	68
STORAGE 217	Storage	NOTHING	2250	20%	1	0	WSIR	2250	20%	1	0	$79.32	$79.32	0.00	0
CLASS 219	Class	2L4T12-EB-40W	1987	100%	9	68	2L4T8-SP-OS	1391	75%	9	54	$33.58	$302.23	0.25	540
CLASS 219	Class	NOTHING	1987	100%	1	0	WCDT	1987	100%	1	0	$256.93	$256.93	0.00	0
CLASS 219	EM/Night	2L15EX	8766	100%	1	30	NLEDEX-G-B	8766	100%	1	3	$59.26	$59.26	0.03	237
STORAGE 1	Storage	2L4T12-EB-40W	2250	20%	1	68	2L4T8-SP-OS	1575	15%	1	54	$33.58	$33.58	0.01	68
STORAGE 1	Storage	NOTHING	2250	20%	1	0	WSIR	2250	20%	1	0	$79.32	$79.32	0.00	0
STORAGE 2	Storage	2L4T8-SP	2250	20%	2	58	2L4T8-SP-NR-OS	1575	15%	2	58	$0.00	$0.00	0.01	78
STORAGE 2	Storage	NOTHING	2250	20%	1	0	WSIR	2250	20%	1	0	$79.32	$79.32	0.00	0
CLASS 211	Class	2L4T12-EB-40W	1987	100%	12	68	2L4T8-SP-OS	1391	75%	12	54	$33.58	$402.97	0.33	720
CLASS 211	Class	NOTHING	1987	100%	1	0	WCDT	1987	100%	1	0	$256.93	$256.93	0.00	0
CLASS 213	Class	2L4T12-EB-40W	1987	100%	9	68	2L4T8-SP-OS	1391	75%	9	54	$33.58	$302.23	0.25	540
CLASS 213	Class	NOTHING	1987	100%	1	0	WCDT	1987	100%	1	0	$256.93	$256.93	0.00	0
CLASS 209	Class	2L4T12-EB-40W	1987	100%	9	68	2L4T8-SP-OS	1391	75%	9	54	$33.58	$302.23	0.25	540
CLASS 209	Class	NOTHING	1987	100%	1	0	WCDT	1987	100%	1	0	$256.93	$256.93	0.00	0
CLASS 207	Class	2L4T12-EB-40W	1987	100%	9	68	2L4T8-SP-OS	1391	75%	9	54	$33.58	$302.23	0.25	540
CLASS 207	Class	NOTHING	1987	100%	1	0	WCDT	1987	100%	1	0	$256.93	$256.93	0.00	0
CLASS 203	Class	2L4T12-EB-40W	1987	100%	9	68	2L4T8-SP-OS	1391	75%	9	54	$33.58	$302.23	0.25	540
CLASS 203	Class	NOTHING	1987	100%	1	0	WCDT	1987	100%	1	0	$256.93	$256.93	0.00	0
CLASS 205	Class	2L4T12-EB-40W	1987	100%	9	68	2L4T8-SP-OS	1391	75%	9	54	$33.58	$302.23	0.25	540
CLASS 205	Class	NOTHING	1987	100%	1	0	WCDT	1987	100%	1	0	$256.93	$256.93	0.00	0
MUSIC 201	Class	2L4T12-EB-40W	1987	100%	27	68	2L4T8-SP-OS-HIGH	1391	75%	27	54	$39.95	$1,078.72	0.74	1,620
MUSIC 201	Class	NOTHING	1987	100%	1	0	WCDT	1987	100%	1	0	$256.93	$256.93	0.00	0
MUSIC ENTRY	Class	2L4T12-40W	1987	100%	1	86	2L4T8-LP	1987	100%	1	48	$33.58	$33.58	0.04	76
MUSIC OFFICE	Offices, Private	2L4T12-EB-40W	2250	50%	2	68	2L4T8-SP-OS	1575	38%	2	54	$33.58	$67.16	0.03	136
MUSIC OFFICE	Offices, Private	NOTHING	2250	50%	1	0	WSIR	2250	50%	1	0	$79.32	$79.32	0.00	0
MUSIC WORK ROOM	Offices, Private	2L8T8-SP	2250	50%	2	110	2L8T8-SP-NR-OS	1575	38%	2	110	$0.00	$0.00	0.03	149
MUSIC WORK ROOM	Offices, Private	NOTHING	2250	50%	1	0	WSIR	2250	50%	1	0	$79.32	$79.32	0.00	0
MUSIC VESTIBULE	Class	2LU6T8-SP	1987	100%	1	58	N2L2T8-SP-2X2TR	1987	100%	1	32	$141.97	$141.97	0.03	52
UNIFORM STORAGE	Storage	2L4T12-EB-40W	2250	20%	1	68	2L4T8-SP-OS	1575	15%	1	54	$33.58	$33.58	0.01	68
UNIFORM STORAGE	Storage	NOTHING	2250	20%	1	0	WSIR	2250	20%	1	0	$79.32	$79.32	0.00	0
BAND STORAGE	Storage	2L4T12-EB-40W	2250	20%	1	68	2L4T8-SP-OS	1575	15%	1	54	$33.58	$33.58	0.01	68
BAND STORAGE	Storage	NOTHING	2250	20%	1	0	WSIR	2250	20%	1	0	$79.32	$79.32	0.00	0
ENSAMBLE	Offices, Private	2L4T12-EB-40W	2250	50%	6	68	2L4T8-SP-OS-HIGH	1575	38%	6	54	$39.95	$239.72	0.08	408
ENSAMBLE	Offices, Private	NOTHING	2250	50%	1	0	WCIR	2250	50%	1	0	$256.93	$256.93	0.00	0
ENSAMBLE VESTIBULE	Offices, Private	2L4T12-EB-40W	2250	50%	1	68	2L4T8-LP	2250	50%	1	48	$33.58	$33.58	0.01	45
AUDITORIUM	Auditorium	2L4T12-EB-40W	2097	40%	13	68	2L4T8-SP	2097	40%	13	54	$33.58	$436.55	0.07	382
AUDITORIUM	EM/Night	LED EXIT	8766	100%	4	3	NO RETRO	8766	100%	4	3	$0.00	$0.00	0.00	0
SOUND BOOTH	Storage	2L4T12-EB-40W	2250	20%	1	68	2L4T8-SP	2250	20%	1	54	$33.58	$33.58	0.00	32
STAGE	Storage	2L8T8-SP	2250	20%	21	110	NO RETRO	2250	20%	21	110	$0.00	$0.00	0.00	0
STAGE STORAGE	Storage	2L8T8-SP	2250	20%	1	110	NO RETRO	2250	20%	1	110	$0.00	$0.00	0.00	0
WATER RISER	Storage	2L4T12-EB-40W	2250	20%	1	68	2L4T8-SP	2250	20%	1	54	$33.58	$33.58	0.00	32
STAGE RR	Private RR	2L100IN	2250	10%	1	200	N2L2T8-SP-WL	2250	10%	1	32	$147.88	$147.88	0.02	378
STORAGE 402	Storage	3L4T8-SP	2250	20%	4	85	3L4T8-SP-NR-OS	1575	15%	4	85	$0.00	$0.00	0.02	230
STORAGE 402	Storage	NOTHING	2250	20%	1	0	WSIR	2250	20%	1	0	$79.32	$79.32	0.00	0
SCIENCE 404	Class	2L4T12-EB-40W	1987	100%	15	68	2L4T8-SP-OS	1391	75%	15	54	$33.58	$503.71	0.41	900
SCIENCE 404	Class	NOTHING	1987	100%	1	0	WCDT	1987	100%	1	0	$256.93	$256.93	0.00	0
WORK ROOM 406	Offices, Private	3L4T8-SP-DUAL	1440	50%	8	90	3L4T8-SP-DUAL-NR-OS	1008	38%	8	90	$0.00	$0.00	0.09	311
WORK ROOM 406	Offices, Private	NOTHING	1440	50%	1	0	WCDT	1440	50%	1	0	$256.93	$256.93	0.00	0
SCIENCE 408	Class	3L4T8-SP-DUAL-OS	1987	100%	1	82	NO RETRO	1987	100%	1	82	$0.00	$0.00	0.00	0
SCIENCE 408	Class	3L2T8-SP-OS	1987	100%	1	45	NO RETRO	1987	100%	1	45	$0.00	$0.00	0.00	0
SCIENCE 401	Class	3L4T8-SP-DUAL	1987	100%	20	90	3L4T8-SP-DUAL-NR-OS	1391	75%	20	90	$0.00	$0.00	0.45	1,073
SCIENCE 401	Class	NOTHING	1987	100%	2	0	WCDT	1987	100%	2	0	$256.93	$513.87	0.00	0
SCIENCE 401	EM/Night	LED EXIT	8766	100%	2	3	NO RETRO	8766	100%	2	3	$0.00	$0.00	0.00	0
WORK / STOR 401A	Offices, Private	3L4T8-SP	2250	50%	4	85	3L4T8-SP-NR-OS	1575	38%	4	85	$0.00	$0.00	0.04	230
WORK / STOR 401A	Offices, Private	NOTHING	2250	50%	1	0	WSIR	2250	50%	1	0	$79.32	$79.32	0.00	0
CUST / STOR 403	Custodial	4L4T8-SP	2250	30%	1	112	4L4T8-SP-NR-OS	2250	23%	1	112	$0.00	$0.00	0.01	0
CUST / STOR 403	Custodial	NOTHING	2250	30%	1	0	WSIR	2250	30%	1	0	$79.32	$79.32	0.00	0
ELECTRIC ROOM 403A	Mechanical	2L4T8-SP	2250	10%	1	58	NO RETRO	2250	10%	1	58	$0.00	$0.00	0.00	0
CLASS 405	Class	3L4T8-SP-DUAL-OS	1987	100%	12	82	NO RETRO	1987	100%	12	82	$0.00	$0.00	0.00	0
CLASS 407	Class	3L4T8-SP-DUAL-OS	1987	100%	12	82	NO RETRO	1987	100%	12	82	$0.00	$0.00	0.00	0
CLASS 409	Class	3L4T8-SP-DUAL-OS	1987	100%	12	82	NO RETRO	1987	100%	12	82	$0.00	$0.00	0.00	0
CLASS 412	Class	3L4T8-SP-DUAL-OS	1987	100%	12	82	NO RETRO	1987	100%	12	82	$0.00	$0.00	0.00	0
CLASS 410	Class	3L4T8-SP-DUAL-OS	1987	100%	12	82	NO RETRO	1987	100%	12	82	$0.00	$0.00	0.00	0
FIRE RISER ROOM	Mechanical	4L4T8-SP	2250	10%	1	112	NO RETRO	2250	10%	1	112	$0.00	$0.00	0.00	0
CLASS 310	Class	4L4T8-SP	1987	100%	18	112	4L4T8-SP-NR-OS	1391	75%	18	112	$0.00	$0.00	0.50	1,202
CLASS 310	Class	NOTHING	1987	100%	1	0	WCDT	1987	100%	1	0	$256.93	$256.93	0.00	0
CLASS 310	EM/Night	LED EXIT	8766	100%	2	3	NO RETRO	8766	100%	2	3	$0.00	$0.00	0.00	0
WORK / STOR	Offices, Private	3L4T8-SP	2250	50%	2	85	3L4T8-SP-NR-OS	1575	38%	2	85	$0.00	$0.00	0.02	115
WORK / STOR	Offices, Private	NOTHING	2250	50%	1	0	WSIR	2250	50%	1	0	$79.32	$79.32	0.00	0
CLASS 312	Class	4L4T8-SP	1987	100%	9	112	4L4T8-SP-NR-OS	1391	75%	9	112	$0.00	$0.00	0.25	601
CLASS 312	Class	NOTHING	1987	100%	1	0	WCDT	1987	100%	1	0	$256.93	$256.93	0.00	0
CLASS 314	Class	4L4T8-SP	1987	100%	9	112	4L4T8-SP-NR-OS	1391	75%	9	112	$0.00	$0.00	0.25	601
CLASS 314	Class	NOTHING	1987	100%	1	0	WCDT	1987	100%	1	0	$256.93	$256.93	0.00	0
CLASS 311	Class	4L4T8-SP	1987	100%	9	112	4L4T8-SP-NR-OS	1391	75%	9	112	$0.00	$0.00	0.25	601
CLASS 311	Class	2L4T8-SP	1987	100%	3	58	2L4T8-SP-NR-OS	1391	75%	3	58	$0.00	$0.00	0.04	104
CLASS 311	Class	NOTHING	1987	100%	1	0	WCDT	1987	100%	1	0	$256.93	$256.93	0.00	0
CLASS 313	Class	4L4T8-SP	1987	100%	9	112	4L4T8-SP-NR-OS	1391	75%	9	112	$0.00	$0.00	0.25	601
CLASS 313	Class	2L4T8-SP	1987	100%	3	58	2L4T8-SP-NR-OS	1391	75%	3	58	$0.00	$0.00	0.04	104
CLASS 313	Class	NOTHING	1987	100%	1	0	WCDT	1987	100%	1	0	$256.93	$256.93	0.00	0
COMPUTER LAB 316	Class	3L4T8-SP	1987	100%	14	85	3L4T8-SP-NR-OS	1391	75%	14	85	$0.00	$0.00	0.30	709
COMPUTER LAB 316	Class	NOTHING	1987	100%	1	0	WCDT	1987	100%	1	0	$256.93	$256.93	0.00	0
COMPUTER LAB 319	Class	3L4T8-SP	1987	100%	14	85	3L4T8-SP-NR-OS	1391	75%	14	85	$0.00	$0.00	0.30	709
COMPUTER LAB 319	Class	NOTHING	1987	100%	1	0	WCDT	1987	100%	1	0	$256.93	$256.93	0.00	0
OFFICE / SERVER	Offices, Private	3L4T8-SP	2250	50%	1	85	3L4T8-SP-NR-OS	1575	38%	1	85	$0.00	$0.00	0.01	57
OFFICE / SERVER	Offices, Private	NOTHING	2250	50%	1	0	WSIR	2250	50%	1	0	$79.32	$79.32	0.00	0
ELECTRIC ROOM	Mechanical	3L4T8-SP	2250	10%	1	85	NO RETRO	2250	10%	1	85	$0.00	$0.00	0.00	0
CUSTODIAL	Custodial	3L4T8-SP	2250	30%	1	85	3L4T8-SP-NR-OS	1575	23%	1	85	$0.00	$0.00	0.01	57
CUSTODIAL	Custodial	NOTHING	2250	30%	1	0	WSIR	2250	30%	1	0	$79.32	$79.32	0.00	0
HALL 300	Halls High School	2LF40-8IAX	4163	100%	10	71	2LF40-8IAX-NR-PC	2082	50%	10	71	$0.00	$0.00	0.36	1,478

HALL 300	Halls High School	NOTHING	4163	100%	1	0	PHOTOCELL	4163	100%	1	0	$95.25	$95.25	0.00	0
HALL 300	Halls High School	2L13CF	4163	100%	4	26	NO RETRO	4163	100%	4	26	$0.00	$0.00	0.00	0
HALL 300	Halls High School	1L18CF	4163	100%	2	18	NO RETRO	4163	100%	2	18	$0.00	$0.00	0.00	0
HALL 300	Halls High School	2LT5HO	4163	100%	2	117	NO RETRO	4163	100%	2	117	$0.00	$0.00	0.00	0
HALL 300	EM/Night	LED EXIT	8766	100%	4	3	NO RETRO	8766	100%	4	3	$0.00	$0.00	0.00	0
HALL 300	Halls High School	2L4T12-EB-40W	4163	100%	20	68	2L4T8-SP	4163	100%	20	54	$33.58	$671.62	0.28	1,166
HALL 400	Halls High School	2L4T8-SP	4163	100%	14	58	NO RETRO	4163	100%	14	58	$0.00	$0.00	0.00	0
HALL 400	Halls High School	2LF40-BIAX	4163	100%	5	71	2LF40-BIAX-NR-PC	2082	50%	5	71	$0.00	$0.00	0.18	739
HALL 400	Halls High School	NOTHING	4163	100%	1	0	PHOTOCELL	4163	100%	1	0	$95.25	$95.25	0.00	0
HALL 400	Halls High School	1L42CF	4163	100%	2	42	NO RETRO	4163	100%	2	42	$0.00	$0.00	0.00	0
HALL 400	EM/Night	LED EXIT	8766	100%	5	3	NO RETRO	8766	100%	5	3	$0.00	$0.00	0.00	0
HALL 200	Halls High School	1L100IN	4163	100%	2	100	N2L13CF-CPY	4163	100%	2	26	$92.87	$185.75	0.15	616
HALL 200	Halls High School	2L4T12-EB-40W	4163	100%	21	68	2L4T8-SP	4163	100%	21	54	$33.58	$705.20	0.29	1,224
HALL 200	EM/Night	LED EXIT	8766	100%	5	3	NO RETRO	8766	100%	5	3	$0.00	$0.00	0.00	0
HALL 500	Halls High School	1L100IN	4163	100%	1	100	N2L13CF-CPY	4163	100%	1	26	$92.87	$92.87	0.07	308
HALL 500	Halls High School	2L4T12-EB-40W	4163	100%	10	68	2L4T8-SP	4163	100%	10	54	$33.58	$335.81	0.14	583
HALL 500	EM/Night	LED EXIT	8766	100%	2	3	NO RETRO	8766	100%	2	3	$0.00	$0.00	0.00	0
HALL 100	Halls High School	3L4T8-SP	4163	100%	8	85	2L4T8-SP-24RFL	4163	100%	8	54	$56.77	$454.16	0.25	1,032
HALL 100	EM/Night	LED EXIT	8766	100%	1	3	NO RETRO	8766	100%	1	3	$0.00	$0.00	0.00	0
COMMON / CAFETERIA	Halls High School	2L4T12-EB-40W	4163	100%	25	68	2L4T8-LP	4163	100%	25	48	$33.58	$839.52	0.50	2,082
COMMON / CAFETERIA	EM/Night	LED EXIT	8766	100%	2	3	NO RETRO	8766	100%	2	3	$0.00	$0.00	0.00	0
COMMON / CAFETERIA	Halls High School	3L4T8-SP	4163	100%	1	85	NO RETRO	4163	100%	1	85	$0.00	$0.00	0.00	0
COMMON / CAFETERIA	Halls High School	1L100HID	4163	100%	8	129	NO RETRO	4163	100%	8	129	$0.00	$0.00	0.00	0
COMMON / CAFETERIA	Halls High School	3L4T8-SP	4163	100%	17	85	NO RETRO	4163	100%	17	85	$0.00	$0.00	0.00	0
COMMON / CAFETERIA	Halls High School	3L4T8-SP	4163	100%	4	85	3L4T8-SP-PCDIM	2082	50%	4	96	$154.61	$618.46	0.15	616
COMMON / CAFETERIA	Halls High School	2L8T8-SP	4163	100%	14	110	2L4T8-SP-8'CONV-ASYMRFL	4163	100%	14	54	$57.91	$810.72	0.78	3,264
COMMON / CAFETERIA	Halls High School	2L4T8-SP	4163	100%	2	58	1L4T8-SP-4'CONV-ASYMRFL	4163	100%	2	28	$55.00	$109.99	0.06	250
COMMON / CAFETERIA	Halls High School	1L42CF	4163	100%	7	42	NO RETRO	4163	100%	7	42	$0.00	$0.00	0.00	0
COMMONS DISPLAY CASE	Halls High School	1L4T12-40W	4163	100%	3	43	1L4T8-LP	4163	100%	3	25	$31.45	$94.34	0.05	225
COMMONS DISPLAY CASE	Halls High School	1L4T8-SP	4163	100%	1	32	NO RETRO	4163	100%	1	32	$0.00	$0.00	0.00	0
COMMONS DISPLAY CASE	Halls High School	1L4T12-40W	4163	100%	6	43	1L4T8-LP	4163	100%	6	25	$31.45	$188.67	0.11	450
AUTO SHOP	Storage	3L4T8-SP	2250	20%	12	85	NO RETRO	2250	20%	12	85	$0.00	$0.00	0.00	0
MODULAR CLASSROOM	Storage	4L4T12-40W	2250	20%	12	172	2L4T8-SP-DLMP	2250	20%	12	54	$35.93	$431.17	0.28	3,186
MODULAR CLASSROOM	EM/Night	2L15EX	8766	100%	2	30	NLEDEX-G-B	8766	100%	2	3	$59.26	$118.53	0.05	473
TOTALS					**1340**					**1340**			**$52,599.24**	**31.75**	**99,865**

* Based on ANSI wattages - to be verified by contractor

** Based on manufacturer's wattages - to be verified by contractor

BUILDING: East Grand Middle School
LIGHTING CONTRACTOR: Contractor Name
ELECTRIC CONSUMPTION RATE: $0.05900 per kWh
ELECTRIC DEMAND RATE: $4.35 per kW
HEATING FUEL RATE: $8.290 per MMBtu

ECM 5.1: Lighting system upgrades

		EXISTING					PROPOSED								
AREA	USAGE TYPE	EXISTING FIXTURE DESCRIPTION	ANNUAL HOURS	Demand Div Factor	QTY	WATTS EACH*	RETROFIT DESCRIPTION	ANNUAL HOURS	Demand Div Factor	QTY	WATTS EACH**	UNIT PRICE	TOTAL EXTENDED PRICE	TOTAL KW SAVED	K SA PE
COMMONS	Halls Middle & Elem	1L400HID	2733	100%	6	458	N6L4T8-HP-LNS-OS	1913	75%	6	222	$274.11	$1,644.68	1.75	4,
COMMONS	Halls Middle & Elem	1L400HID	2733	100%	6	458	N6L4T8-SP-LNS-OS-PCDIM	1913	38%	6	192	$299.32	$1,795.90	2.32	5,
COMMONS	Halls Middle & Elem	1L1000HID	2733	100%	6	1080	N8L4T8-HP-LNS-OS-PC	1913	38%	6	296	$387.07	$2,322.39	5.81	14,
COMMONS	Halls Middle & Elem	NOTHING	2733	100%	1	0	PHOTOCELL	2733	100%	1	0	$95.25	$95.25	0.00	
COMMONS	Halls Middle & Elem	2L4T8-SP	2733	100%	15	58	2L4T8-LP-OS-HIGH	2914	75%	15	48	$38.84	$582.53	0.33	2
COMMONS	EM/Night	2L4T8-SP-EM	8766	100%	12	58	2L4T8-LP-DUAL-EM-HIGH	8766	100%	12	50	$134.27	$1,611.26	0.10	8
COMMONS	Halls Middle & Elem	3L4T8-SP	2733	100%	3	85	2L4T8-SP-24RFL	2733	100%	3	54	$56.77	$170.31	0.09	2
COMMONS	EM/Night	3L4T8-SP-EM	8766	100%	2	82	2L4T8-SP-24RFL-EM	8766	100%	2	54	$152.21	$304.41	0.06	4
COMMONS	Halls Middle & Elem	NOTHING	2733	100%	2	0	WCDT	4163	100%	2	0	$256.93	$513.87	0.00	
ENTRY VESTIBULE	Halls Middle & Elem	1L70HID	2733	100%	2	90	1L32CF-CONV-PC	1367	50%	2	32	$75.85	$151.70	0.15	4
ENTRY VESTIBULE	Halls Middle & Elem	NOTHING	2733	100%	1	0	PHOTOCELL	2733	100%	1	0	$95.25	$95.25	0.00	
STAGE	Storage	3L4T8-SP	2250	20%	11	85	2L4T8-SP-24RFL	2250	20%	11	54	$56.77	$624.47	0.07	7
RAMP / CORRIDOR	Halls Middle & Elem	3L4T8-SP	4163	100%	2	85	2L4T8-SP-24RFL	4163	100%	2	54	$56.77	$113.54	0.06	2
RAMP / CORRIDOR	EM/Night	3L4T8-SP-DUAL-EM	8766	100%	1	82	2L4T8-SP-24RFL-DUAL-EM	8766	100%	1	56	$152.53	$152.53	0.03	2
CHOIR	Class	3L4T8-SP-OS	2365	100%	13	82	2L4T8-SP-24RFL-OS	1656	75%	13	54	$56.77	$738.01	0.54	1,
CHOIR STORAGE	Storage	3L4T8-SP	2250	20%	2	85	2L4T8-SP-24RFL	2250	20%	2	54	$56.77	$113.54	0.01	1
GIRLS RESTROOM	Halls Middle & Elem	1L32CF	4163	100%	1	32	NO RETRO	4163	100%	1	32	$0.00	$0.00	0.00	
GIRLS RESTROOM	Halls Middle & Elem	2L4T8-SP	4163	100%	8	58	2L4T8-LP	4163	100%	8	48	$32.46	$259.71	0.08	3
GIRLS RESTROOM	EM/Night	2L4T8-SP-EM	8766	100%	1	58	2L4T8-LP-DUAL-EM	8766	100%	1	50	$127.90	$127.90	0.01	7
BOYS RESTROOM	Halls Middle & Elem	1L32CF	4163	100%	1	32	NO RETRO	4163	100%	1	32	$0.00	$0.00	0.00	
BOYS RESTROOM	Halls Middle & Elem	2L4T8-SP	4163	100%	8	58	2L4T8-LP	4163	100%	8	48	$32.46	$259.71	0.08	3
BOYS RESTROOM	EM/Night	2L4T8-SP-EM	8766	100%	1	58	2L4T8-LP-DUAL-EM	8766	100%	1	50	$127.90	$127.90	0.01	7
CUSTODIAL	Custodial	2L4T8-SP	2250	30%	1	58	NO RETRO	2250	30%	1	58	$0.00	$0.00	0.00	
CUSTODIAL	Custodial	NOTHING	2250	30%	1	0	WSIR	2250	30%	1	0	$79.32	$79.32	0.00	
GYMNASIUM	Gym	1L400HID	2733	100%	30	458	N6LT8-HP-LNS-WG-OS	1913	75%	30	222	$438.15	$13,144.38	8.75	24,
GYMNASIUM	Gym	NOTHING	2733	100%	4	0	WCIR	2733	100%	4	0	$316.78	$1,267.12	0.00	
GYMNASIUM	EM/Night	LED EXIT	8766	100%	5	3	NO RETRO	8766	100%	5	3	$0.00	$0.00	0.00	
GYM S ENTRY VEST	Halls Middle & Elem	3L4T8-SP	2733	100%	3	85	2L4T8-SP-24RFL-PC	1367	50%	3	54	$56.77	$170.31	0.17	4
GYM S ENTRY VEST	Halls Middle & Elem	NOTHING	2733	100%	1	0	PHOTOCELL	2733	100%	1	0	$95.25	$95.25	0.00	
GYM EQUIPMENT 1	Supply	3L4T8-SP	2733	40%	2	85	2L4T8-SP-24RFL-OS	1913	30%	2	54	$56.77	$113.54	0.04	2
GYM EQUIPMENT 1	Supply	NOTHING	2733	40%	1	0	WSIR	2723	40%	1	0	$79.32	$79.32	0.00	
GYM EQUIPMENT 2	Supply	3L4T8-SP	2733	40%	6	85	2L4T8-SP-24RFL-OS	1913	30%	6	54	$56.77	$340.62	0.11	7
GYM EQUIPMENT 2	Supply	NOTHING	2733	40%	1	0	WSIR	2733	40%	1	0	$79.32	$79.32	0.00	
GYM N ENTRY VEST	Halls Middle & Elem	1L32CF	2733	100%	3	32	NO RETRO	2733	100%	3	32	$0.00	$0.00	0.00	
BOYS LOCKER ROOM	Class	3L4T8-SP	2880	100%	10	85	2L4T8-SP-24RFL	2880	100%	10	54	$56.77	$567.70	0.31	8
BOYS LOCKER ROOM	Class	2L4T8-SP	2880	100%	3	58	NO RETRO	2880	100%	3	58	$0.00	$0.00	0.00	
BOYS LOCKER ROOM	EM/Night	LED EXIT	8766	100%	1	3	NO RETRO	8766	100%	1	3	$0.00	$0.00	0.00	
BOYS COACH	Offices, Private	3L4T8-SP	2880	50%	2	85	2L4T8-SP-24RFL	2880	50%	2	54	$56.77	$113.54	0.03	1
BOYS COACH LOCKER	Offices, Private	3L4T8-SP	2880	50%	1	85	2L4T8-SP-24RFL	2880	50%	1	54	$56.77	$56.77	0.02	8
GIRLS LOCKER ROOM	Class	3L4T8-SP	2880	100%	7	85	2L4T8-SP-24RFL	2880	100%	7	54	$56.77	$397.39	0.22	6
GIRLS LOCKER ROOM	Class	2L4T8-SP	2880	100%	3	58	NO RETRO	2880	100%	3	58	$0.00	$0.00	0.00	
GIRLS LOCKER ROOM	EM/Night	LED EXIT	8766	100%	1	3	NO RETRO	8766	100%	1	3	$0.00	$0.00	0.00	
GIRLS COACH	Offices, Private	3L4T8-SP	2880	50%	2	85	2L4T8-SP-24RFL	2880	50%	2	54	$56.77	$113.54	0.03	1
GIRLS COACH LOCKER	Offices, Private	3L4T8-SP	2880	50%	1	85	2L4T8-SP-24RFL	2880	50%	1	54	$56.77	$56.77	0.02	8
STAIR/EXIT CORR	Halls Middle & Elem	3L4T8-SP	4163	100%	3	85	2L4T8-SP-24RFL	4163	100%	3	54	$56.77	$170.31	0.09	3
STAIR/EXIT CORR	EM/Night	3L4T8-SP-DUAL-EM	8766	100%	3	82	2L4T8-SP-24RFL-DUAL-EM	8766	100%	3	56	$152.53	$457.58	0.08	6
CHOIR CORR	Halls Middle & Elem	3L4T8-SP	4163	100%	4	85	2L4T8-SP-24RFL	4163	100%	4	54	$56.77	$227.08	0.12	5
CHOIR CORR	EM/Night	3L4T8-SP-DUAL-EM	8766	100%	2	82	2L4T8-SP-24RFL-DUAL-EM	8766	100%	2	56	$152.53	$305.05	0.05	4
CHOIR CORR	EM/Night	LED EXIT	8766	100%	1	3	NO RETRO	8766	100%	1	3	$0.00	$0.00	0.00	
KITCHEN	EM/Night	3L4T8-SP-EM	8766	100%	4	82	2L4T8-SP-24RFL-DUAL-EM	8766	100%	4	56	$152.21	$608.83	0.10	9
KITCHEN	Kitchen	3L4T8-SP	1000	100%	9	85	2L4T8-SP-24RFL	1000	100%	9	54	$56.77	$510.93	0.28	2
KITCHEN	EM/Night	LED EXIT	8766	100%	2	3	NO RETRO	8766	100%	2	3	$0.00	$0.00	0.00	
KITCHEN OFFICE	Offices, Private	3L4T8-SP	2250	50%	1	85	2L4T8-SP-24RFL-OS	1575	38%	1	54	$56.77	$56.77	0.02	1
KITCHEN OFFICE	Offices, Private	NOTHING	2250	50%	1	0	WSIR	2250	50%	1	0	$79.32	$79.32	0.00	
RR	Private RR	3L4T8-SP	2250	10%	1	85	2L4T8-SP-24RFL-OS	1575	8%	1	54	$56.77	$56.77	0.00	1
RR	Private RR	NOTHING	2250	10%	1	0	WSIR	2250	10%	1	0	$79.32	$79.32	0.00	
DRY GOODS	Kitchen	3L4T8-SP	1000	100%	2	85	2L4T8-SP-24RFL-OS	700	75%	2	54	$56.77	$113.54	0.09	9
DRY GOODS	Kitchen	NOTHING	1000	100%	1	0	WSIR	1000	100%	1	0	$79.32	$79.32	0.00	
MECH	Mechanical	2L4T8-SP	2250	10%	9	58	NO RETRO	2250	10%	9	58	$0.00	$0.00	0.00	
SCHOOL STORE	Storage	3L4T8-SP	2250	20%	4	85	2L4T8-SP-24RFL-OS	1575	15%	4	54	$56.77	$227.08	0.04	4
SCHOOL STORE	Storage	NOTHING	2250	20%	1	0	WSIR	2250	20%	1	0	$79.32	$79.32	0.00	
MUSIC ROOM	Class	3L4T8-SP-OS	2365	100%	20	82	2L4T8-SP-24RFL-OS	1656	75%	20	54	$56.77	$1,135.40	0.83	2,
MUSIC ROOM	Class	3L4T8-SP-OS	2365	100%	5	82	2L4T8-SP-24RFL-OS	1656	75%	5	54	$56.77	$283.85	0.21	5
MUSIC ROOM	EM/Night	LED EXIT	8766	100%	2	3	NO RETRO	8766	100%	2	3	$0.00	$0.00	0.00	
MUSIC OFFICE	Offices, Private	3L4T8-SP	2250	50%	2	85	2L4T8-SP-24RFL-OS	1575	38%	2	54	$56.77	$113.54	0.04	2
MUSIC OFFICE	Offices, Private	NOTHING	2250	50%	1	0	WSIR	2250	50%	1	0	$79.32	$79.32	0.00	
INSTRUMENTS	Class	3L4T8-SP	2365	100%	8	85	2L4T8-SP-24RFL-OS	1656	75%	8	54	$56.77	$454.16	0.36	8
INSTRUMENTS	Class	NOTHING	2365	100%	1	0	WCIR	2365	100%	1	0	$256.93	$256.93	0.00	
MUSIC STORAGE	Storage	3L4T8-SP	2250	20%	2	85	2L4T8-SP-24RFL-OS	1575	15%	2	54	$56.77	$113.54	0.02	2
MUSIC STORAGE	Storage	NOTHING	2250	20%	1	0	WSIR	2250	20%	1	0	$79.32	$79.32	0.00	
ELECTRIC ROOM	Mechanical	3L4T8-SP	2250	10%	1	85	2L4T8-SP-24RFL	2250	10%	1	54	$56.77	$56.77	0.00	7
MUSIC CORR	Halls Middle & Elem	3L4T8-SP	4163	100%	4	85	2L4T8-SP-24RFL	4163	100%	4	54	$56.77	$227.08	0.12	5
MUSIC CORR	EM/Night	3L4T8-SP-DUAL-EM	8766	100%	2	82	2L4T8-SP-24RFL-DUAL-EM	8766	100%	2	56	$152.53	$305.05	0.05	4
MUSIC CORR	EM/Night	LED EXIT	8766	100%	1	3	NO RETRO	8766	100%	1	3	$0.00	$0.00	0.00	
MAIN OFFICE	Common Admin	3L4T8-SP	2250	100%	15	85	2L4T8-SP-24RFL	2250	100%	15	54	$56.77	$851.55	0.47	1,
MAIN OFFICE	EM/Night	3L4T8-SP-DUAL-EM	8766	100%	3	82	2L4T8-SP-24RFL-DUAL-EM	8766	100%	3	56	$152.53	$457.58	0.08	6
MAIN OFFICE	EM/Night	LED EXIT	8766	100%	1	3	NO RETRO	8766	100%	1	3	$0.00	$0.00	0.00	
MAIN OFFICE	Common Admin	1L32CF	2250	100%	10	32	NO RETRO	2250	100%	10	32	$0.00	$0.00	0.00	
CLINIC	Common Admin	3L4T8-SP	2250	100%	6	85	NO RETRO	2250	100%	6	85	$0.00	$0.00	0.00	
CLINIC	Common Admin	2L4T8-SP	2250	100%	1	58	NO RETRO	2250	100%	1	58	$0.00	$0.00	0.00	
CUSTODIAL OFFICE	Offices, Private	3L4T8-SP	2250	50%	3	85	2L4T8-SP-24RFL-OS	1575	38%	3	54	$56.77	$170.31	0.07	3
CUSTODIAL OFFICE	Offices, Private	NOTHING	2250	50%	1	0	WSIR	2250	50%	1	0	$79.32	$79.32	0.00	
PRINCIPAL OFFICE	Offices, Private	3L4T8-SP	2250	50%	6	85	2L4T8-SP-24RFL-OS	1575	38%	6	54	$56.77	$340.62	0.13	6
PRINCIPAL OFFICE	Offices, Private	NOTHING	2250	50%	1	0	WCDT	2250	50%	1	0	$256.93	$256.93	0.00	
ELECTRIC ROOM	Mechanical	3L4T8-SP	2250	10%	4	85	2L4T8-SP-24RFL	1575	10%	4	54	$56.77	$227.08	0.01	4
WORK ROOM	Offices, Private	3L4T8-SP	2250	50%	6	85	2L4T8-SP-24RFL	2250	50%	6	54	$56.77	$340.62	0.09	4

STAFF LOUNGE	Offices, Private	3L4T8-SP	2250	50%	8	85	2L4T8-SP-24RFL-OS	1575	38%	8	54	$56.77	$454.16	0.18	8
STAFF LOUNGE	Offices, Private	NOTHING	2250	50%	1	0	WCDT	2250	50%	1	0	$256.93	$256.93	0.00	
RRS	Private RR	2L4T8-SP	2250	10%	2	58	2L4T8-SP-NR-OS	1575	8%	2	58	$0.00	$0.00	0.00	7
RRS	Private RR	NOTHING	2250	10%	2	0	WSIR	2250	10%	2	0	$79.32	$158.65	0.00	
DETENTION	Offices, Private	3L4T8-SP	2250	50%	4	85	2L4T8-SP-24RFL-OS	1575	38%	4	54	$56.77	$227.08	0.09	4
DETENTION	Offices, Private	NOTHING	2250	50%	1	0	WCDT	2250	50%	1	0	$256.93	$256.93	0.00	
RECORDS	Offices, Private	3L4T8-SP	2250	50%	4	85	2L4T8-SP-24RFL-OS	1575	38%	4	54	$56.77	$227.08	0.09	4
RECORDS	Offices, Private	NOTHING	2250	50%	1	0	WSIR	2250	50%	1	0	$79.32	$79.32	0.00	
CONFERENCE ROOM	Conference	3L4T8-SP	2250	40%	6	85	2L4T8-SP-24RFL-OS	1575	30%	6	54	$56.77	$340.62	0.11	6
CONFERENCE ROOM	Conference	NOTHING	2250	40%	1	0	CIR	2250	40%	1	0	$256.93	$256.93	0.00	
COUNSELING	Offices, Private	3L4T8-SP	2250	50%	9	85	2L4T8-SP-24RFL	2250	50%	9	54	$56.77	$510.93	0.14	6
COUNSELING	EM/Night	3L4T8-SP-DUAL-EM	8766	100%	7	82	2L4T8-SP-24RFL-DUAL-EM	8766	100%	7	56	$152.53	$1,067.68	0.18	1,:
COUNSELING	EM/Night	LED EXIT	8766	100%	2	3	NO RETRO	8766	100%	2	3	$0.00	$0.00	0.00	
COUNSELING CONF	Conference	3L4T8-SP	2250	40%	4	85	2L4T8-SP-24RFL-OS	1575	30%	4	54	$56.77	$227.08	0.07	4
COUNSELING CONF	Conference	NOTHING	2250	40%	1	0	WSDT	2250	40%	1	0	$114.31	$114.31	0.00	
COUNSELING RECORDS	Supply	2L4T8-SP	2250	40%	2	58	2L4T8-SP-NR-OS	1575	30%	2	58	$0.00	$0.00	0.01	7
COUNSELING RECORDS	Supply	NOTHING	2250	40%	1	0	WSIR	2250	40%	1	0	$79.32	$79.32	0.00	
COUNSELING OFFICE 1	Offices, Private	3L4T8-SP	2250	50%	6	85	2L4T8-SP-24RFL-OS	1575	38%	6	54	$56.77	$340.62	0.13	6
COUNSELING OFFICE 1	Offices, Private	NOTHING	2250	50%	1	0	WSDT	2250	50%	1	0	$114.31	$114.31	0.00	
COUNSELING OFFICE 2	Offices, Private	3L4T8-SP	2250	50%	6	85	2L4T8-SP-24RFL-OS	1575	38%	6	54	$56.77	$340.62	0.13	6
COUNSELING OFFICE 2	Offices, Private	NOTHING	2250	50%	1	0	WSDT	2250	50%	1	0	$114.31	$114.31	0.00	
ELEVATOR ROOM	Mechanical	2L4T8-SP	2250	10%	1	58	NO RETRO	2250	10%	1	58	$0.00	$0.00	0.00	
CLASS 113	Class	3L4T8-SP	2365	100%	19	85	2L4T8-SP-24RFL	2365	100%	19	54	$56.77	$1,078.63	0.59	1,:
STOR 113	Storage	3L4T8-SP	2250	20%	2	85	2L4T8-SP-24RFL-OS	1575	15%	2	54	$56.77	$113.54	0.02	2
STOR 113	Storage	NOTHING	2250	20%	1	0	WSIR	2250	20%	1	0	$79.32	$79.32	0.00	
TECH LAB 112	Class	3L4T8-SP-OS	2365	100%	21	82	2L4T8-SP-24RFL-OS	1656	75%	21	54	$56.77	$1,192.17	0.87	2,:
TECH OFFICE	Class	3L4T8-SP	2365	100%	3	85	2L4T8-SP-24RFL-OS	1656	75%	3	54	$56.77	$170.31	0.13	3
TECH OFFICE	Offices, Private	NOTHING	2250	50%	1	0	WSDT	2250	50%	1	0	$114.31	$114.31	0.00	
ART CLASS 111	Class	3L4T8-SP-OS	2365	100%	16	82	NO RETRO	1656	100%	16	82	$0.00	$0.00	0.00	9
ART STORAGE	Storage	3L4T8-SP	2250	20%	3	85	2L4T8-SP-24RFL-OS	1575	15%	3	54	$56.77	$170.31	0.03	3
ART STORAGE	Storage	NOTHING	2250	20%	1	0	WSIR	2250	20%	1	0	$79.32	$79.32	0.00	
ELECTRIC ROOM	Mechanical	2L4T8-SP	2250	10%	1	58	NO RETRO	2250	10%	1	58	$0.00	$0.00	0.00	
PROJECT ROOM	Storage	3L4T8-SP-DUAL	2250	20%	4	90	NO RETRO	2250	20%	4	90	$0.00	$0.00	0.00	
ART OFFICE	Offices, Private	3L4T8-SP	2250	50%	2	85	2L4T8-SP-24RFL-OS	1575	38%	2	54	$56.77	$113.54	0.04	2
ART OFFICE	Offices, Private	NOTHING	2250	50%	1	0	WSIR	2250	50%	1	0	$79.32	$79.32	0.00	
ART WORK ROOM	Class	3L4T8-SP	2365	100%	2	85	2L4T8-SP-24RFL-OS	1656	75%	2	54	$56.77	$113.54	0.09	2
ART WORK ROOM	Class	NOTHING	2365	100%	1	0	WSIR	2365	100%	1	0	$79.32	$79.32	0.00	
TECH LAB 130	Class	3L4T8-SP-OS	2365	100%	15	82	2L4T8-SP-24RFL-OS	1656	75%	15	54	$56.77	$851.55	0.62	1,:
TECH LAB 130	Class	2L4T8-SP-OS	2365	100%	2	58	NO RETRO	2365	100%	2	58	$0.00	$0.00	0.00	
TECH OFFICE	Offices, Private	3L4T8-SP	2250	50%	3	85	2L4T8-SP-24RFL-OS	1575	38%	3	54	$56.77	$170.31	0.07	3
TECH OFFICE	Offices, Private	NOTHING	2250	50%	1	0	WSIR	2250	50%	1	0	$79.32	$79.32	0.00	
ELECTRIC ROOM	Mechanical	3L4T8-SP	2250	10%	1	85	2L4T8-SP-24RFL	2250	10%	1	54	$56.77	$56.77	0.00	7
CUSTODIAL	Custodial	2L4T8-SP	2250	30%	1	58	2L4T8-SP-NR-OS	1125	23%	1	58	$0.00	$0.00	0.00	6
CUSTODIAL	Custodial	NOTHING	2250	30%	1	0	WSIR	2250	30%	1	0	$79.32	$79.32	0.00	
STAFF RR	Private RR	2L4T8-SP	2250	10%	1	58	2L4T8-SP-NR-OS	1575	8%	1	58	$0.00	$0.00	0.00	3
STAFF RR	Private RR	NOTHING	2250	10%	1	0	WSIR	2250	10%	1	0	$79.32	$79.32	0.00	
CLASS 131	Class	3L4T8-SP-OS	2365	100%	12	82	2L4T8-SP-24RFL-OS	1656	75%	12	54	$56.77	$681.24	0.50	1,:
CLASS 132	Class	3L4T8-SP-OS	2365	100%	12	82	2L4T8-SP-24RFL-OS	1656	75%	12	54	$56.77	$681.24	0.50	1,:
CLASS 132	Class	3L4T8-SP-OS	2365	100%	1	82	2L4T8-SP-24RFL-OS	1656	75%	1	54	$56.77	$56.77	0.04	1
CLASS 132	EM/Night	LED EXIT	8766	100%	1	3	NO RETRO	8766	100%	1	3	$0.00	$0.00	0.00	
SCIENCE STORAGE	Storage	3L4T8-SP	2250	20%	2	85	2L4T8-SP-24RFL-OS	1575	15%	2	54	$56.77	$113.54	0.02	2
SCIENCE STORAGE	Storage	NOTHING	2250	20%	1	0	WSIR	2250	20%	1	0	$79.32	$79.32	0.00	
SCIENCE OFFICE	Offices, Private	3L4T8-SP	2250	50%	2	85	2L4T8-SP-24RFL-OS	1575	38%	2	54	$56.77	$113.54	0.04	2
SCIENCE OFFICE	Offices, Private	NOTHING	2250	50%	1	0	WSIR	2250	50%	1	0	$79.32	$79.32	0.00	
CLASS 133	Class	3L4T8-SP-OS	2365	100%	11	82	2L4T8-SP-24RFL-OS	1656	75%	11	54	$56.77	$624.47	0.46	1,
CLASS 134	Class	3L4T8-SP-OS	2365	100%	11	82	2L4T8-SP-24RFL-OS	1656	75%	11	54	$56.77	$624.47	0.46	1,
CLASS 135	Class	3L4T8-SP-OS	2365	100%	12	82	2L4T8-SP-24RFL-OS	1656	75%	12	54	$56.77	$681.24	0.50	1,:
CLASS 137	Class	3L4T8-SP-OS	2365	100%	12	82	2L4T8-SP-24RFL-OS	1656	75%	12	54	$56.77	$681.24	0.50	1,:
TECH LAB 136	Class	3L4T8-SP	2365	100%	6	85	2L4T8-SP-24RFL-OS	1656	75%	6	54	$56.77	$340.62	0.27	6
TECH LAB 136	Class	NOTHING	2365	100%	1	0	WCDT	2365	100%	1	0	$256.93	$256.93	0.00	
TEAM WORK ROOM	Offices, Private	3L4T8-SP	2250	50%	4	85	2L4T8-SP-24RFL-OS	1575	38%	4	54	$56.77	$227.08	0.09	4
TEAM WORK ROOM	Offices, Private	NOTHING	2250	50%	1	0	WSIR	2250	50%	1	0	$79.32	$79.32	0.00	
CLASS 138	Class	3L4T8-SP-OS	2365	100%	10	82	2L4T8-SP-24RFL-OS	1656	75%	10	54	$56.77	$567.70	0.42	1,(
GIRLS RESTROOM	Halls Middle & Elem	1L32CF	4163	100%	1	32	NO RETRO	4163	100%	1	32	$0.00	$0.00	0.00	
GIRLS RESTROOM	Halls Middle & Elem	2L4T8-SP	4163	100%	8	58	2L4T8-LP	4163	100%	8	48	$32.46	$259.71	0.08	3
GIRLS RESTROOM	EM/Night	2L4T8-SP-EM	8766	100%	1	58	2L4T8-LP-DUAL-EM	8766	100%	1	50	$127.90	$127.90	0.01	7
BOYS RESTROOM	Halls Middle & Elem	1L32CF	4163	100%	1	32	NO RETRO	4163	100%	1	32	$0.00	$0.00	0.00	
BOYS RESTROOM	Halls Middle & Elem	2L4T8-SP	4163	100%	8	58	2L4T8-LP	4163	100%	8	48	$32.46	$259.71	0.08	3
BOYS RESTROOM	EM/Night	2L4T8-SP-EM	8766	100%	1	58	2L4T8-LP-DUAL-EM	8766	100%	1	50	$127.90	$127.90	0.01	7
SUPPLY ROOM	Supply	3L4T8-SP	2250	40%	1	85	2L4T8-SP-24RFL-OS	1575	30%	1	54	$56.77	$56.77	0.02	1
SUPPLY ROOM	Supply	NOTHING	2250	40%	1	0	WSIR	2250	40%	1	0	$79.32	$79.32	0.00	
DATA ROOM	Mechanical	3L4T8-SP	2250	10%	1	85	2L4T8-SP-24RFL-OS	1575	8%	1	54	$56.77	$56.77	0.00	1
DATA ROOM	Mechanical	NOTHING	2250	10%	1	0	WSIR	2250	10%	1	0	$79.32	$79.32	0.00	
SUPPLY ROOM	Supply	3L4T8-SP	2250	40%	1	85	2L4T8-SP-24RFL-OS	1575	30%	1	54	$56.77	$56.77	0.02	1
SUPPLY ROOM	Supply	NOTHING	2250	40%	1	0	WSIR	2250	40%	1	0	$79.32	$79.32	0.00	
CLASS 128	Class	3L4T8-SP-OS	2365	100%	10	82	2L4T8-SP-24RFL-OS	1656	75%	10	54	$56.77	$567.70	0.42	1,(
CLASS 127	Class	3L4T8-SP-OS	2365	100%	12	82	2L4T8-SP-24RFL-OS	1656	75%	12	54	$56.77	$681.24	0.50	1,:
CLASS 125	Class	3L4T8-SP-OS	2365	100%	12	82	2L4T8-SP-24RFL-OS	1656	75%	12	54	$56.77	$681.24	0.50	1,:
CLASS 125	Class	3L4T8-SP-OS	2365	100%	1	82	2L4T8-SP-24RFL-OS	1656	75%	1	54	$56.77	$56.77	0.04	1
CLASS 125	EM/Night	LED EXIT	8766	100%	1	3	NO RETRO	8766	100%	1	3	$0.00	$0.00	0.00	
SCIENCE STORAGE	Storage	3L4T8-SP	2250	20%	2	85	2L4T8-SP-24RFL-OS	1575	15%	2	54	$56.77	$113.54	0.02	2
SCIENCE STORAGE	Storage	NOTHING	2250	20%	1	0	WSIR	2250	20%	1	0	$79.32	$79.32	0.00	
SCIENCE OFFICE	Offices, Private	3L4T8-SP	2250	50%	2	85	2L4T8-SP-24RFL-OS	1575	38%	2	54	$56.77	$113.54	0.04	2
SCIENCE OFFICE	Offices, Private	NOTHING	2250	50%	1	0	WSIR	2250	50%	1	0	$79.32	$79.32	0.00	
CLASS 124	Class	3L4T8-SP-OS	2365	100%	11	82	2L4T8-SP-24RFL-OS	1656	75%	11	54	$56.77	$624.47	0.46	1,
CLASS 123	Class	3L4T8-SP-OS	2365	100%	11	82	2L4T8-SP-24RFL-OS	1656	75%	11	54	$56.77	$624.47	0.46	1,
CLASS 122	Class	3L4T8-SP-OS	2365	100%	12	82	2L4T8-SP-24RFL-OS	1656	75%	12	54	$56.77	$681.24	0.50	1,:
CLASS 121	Class	3L4T8-SP-OS	2365	100%	12	82	2L4T8-SP-24RFL-OS	1656	75%	12	54	$56.77	$681.24	0.50	1,:
STORAGE	Storage	3L4T8-SP	2250	20%	2	85	2L4T8-SP-24RFL-OS	1575	15%	2	54	$56.77	$113.54	0.02	2
STORAGE	Storage	NOTHING	2250	20%	1	0	WSIR	2250	20%	1	0	$79.32	$79.32	0.00	
TESTING	Offices, Private	3L4T8-SP	2250	50%	2	85	2L4T8-SP-24RFL-OS	1575	38%	2	54	$56.77	$113.54	0.04	2
TESTING	Offices, Private	NOTHING	2250	50%	1	0	WSIR	2250	50%	1	0	$79.32	$79.32	0.00	
OFFICE	Offices, Private	3L4T8-SP	2250	50%	2	85	2L4T8-SP-24RFL-OS	1575	38%	2	54	$56.77	$113.54	0.04	2
OFFICE	Offices, Private	NOTHING	2250	50%	1	0	WSIR	2250	50%	1	0	$79.32	$79.32	0.00	
TECH LAB	Class	3L4T8-SP	2365	100%	6	85	2L4T8-SP-24RFL-OS	1656	75%	6	54	$56.77	$340.62	0.27	6
TECH LAB	Class	NOTHING	2365	100%	1	0	WCDT	2365	100%	1	0	$256.93	$256.93	0.00	
TEAM WORK ROOM	Offices, Private	3L4T8-SP	2250	50%	4	85	2L4T8-SP-24RFL-OS	1575	38%	4	54	$56.77	$227.08	0.09	4
TEAM WORK ROOM	Offices, Private	NOTHING	2250	50%	1	0	WSIR	2250	50%	1	0	$79.32	$79.32	0.00	
GIRLS RESTROOM	Halls Middle & Elem	1L32CF	4163	100%	1	32	NO RETRO	4163	100%	1	32	$0.00	$0.00	0.00	
GIRLS RESTROOM	Halls Middle & Elem	2L4T8-SP	4163	100%	8	58	2L4T8-LP	4163	100%	8	48	$32.46	$259.71	0.08	3

GIRLS RESTROOM	EM/Night	2L4T8-SP-EM	8766	100%	1	58	2L4T8-LP-DUAL-EM	8766	100%	1	50	$127.90	$127.90	0.01	7
BOYS RESTROOM	Halls Middle & Elem	1L32CF	4163	100%	1	32	NO RETRO	4163	100%	1	32	$0.00	$0.00	0.00	
BOYS RESTROOM	Halls Middle & Elem	2L4T8-SP	4163	100%	8	58	2L4T8-LP	4163	100%	8	48	$32.46	$259.71	0.08	3
BOYS RESTROOM	EM/Night	2L4T8-SP-EM	8766	100%	1	58	2L4T8-LP-DUAL-EM	8766	100%	1	50	$127.90	$127.90	0.01	7
SUPPLY ROOM	Supply	3L4T8-SP	2250	40%	1	85	2L4T8-SP-24RFL-OS	1575	30%	1	54	$56.77	$56.77	0.02	1
SUPPLY ROOM	Supply	NOTHING	2250	40%	1	0	WSIR	2250	40%	1	0	$79.32	$79.32	0.00	
SUPPLY ROOM	Supply	3L4T8-SP	2250	40%	1	85	2L4T8-SP-24RFL-OS	1575	30%	1	54	$56.77	$56.77	0.02	1
SUPPLY ROOM	Supply	NOTHING	2250	40%	1	0	WSIR	2250	40%	1	0	$79.32	$79.32	0.00	
CUSTODIAL	Custodial	2L4T8-SP	2250	30%	1	58	2L4T8-SP-NR-OS	1575	23%	1	58	$0.00	$0.00	0.00	3
CUSTODIAL	Custodial	NOTHING	2250	30%	1	0	WSIR	2250	30%	1	0	$79.32	$79.32	0.00	
STAFF RR	Private RR	2L4T8-SP	2250	10%	1	58	2L4T8-SP-NR-OS	1575	8%	1	58	$0.00	$0.00	0.00	3
STAFF RR	Private RR	NOTHING	2250	10%	1	0	WSIR	2250	10%	1	0	$79.32	$79.32	0.00	
MEDIA CENTER	Library	3L4T8-SP	2365	90%	26	85	2L4T8-SP-24RFL-HIGH	2365	90%	26	54	$63.14	$1,641.69	0.73	1,1
MEDIA CENTER	Library	3L4T8-SP	2365	90%	6	85	2L4T8-SP-24RFL	2365	90%	6	54	$56.77	$340.62	0.17	4
MEDIA CENTER	Library	3L4T8-SP	2365	90%	5	85	2L4T8-SP-24RFL-PCDIM	1183	45%	5	58	$106.80	$534.00	0.25	6
MEDIA CLASS AREA	Library	3L4T8-SP	2365	90%	10	85	2L4T8-SP-24RFL-OS	1656	68%	10	54	$56.77	$567.70	0.40	1,
MEDIA CLASS AREA	Library	NOTHING	2365	90%	1	0	WCDT	2365	90%	1	0	$256.93	$256.93	0.00	
MEDIA OFFICE	Offices, Private	3L4T8-SP	2250	50%	2	85	2L4T8-SP-24RFL-OS	1575	38%	2	54	$56.77	$113.54	0.04	2
MEDIA OFFICE	Offices, Private	NOTHING	2250	50%	1	0	WSDT	2250	50%	1	0	$114.31	$114.31	0.00	
MEDIA WORK AREA	Offices, Private	3L4T8-SP	2250	50%	10	85	2L4T8-SP-24RFL-OS	1575	38%	10	54	$56.77	$567.70	0.22	1,1
MEDIA WORK AREA	Offices, Private	NOTHING	2250	50%	1	0	WCDT	2250	50%	1	0	$256.93	$256.93	0.00	
MEDIA WORK A/V STOR	Storage	3L4T8-SP	2250	20%	2	85	2L4T8-SP-24RFL	2250	20%	2	54	$56.77	$113.54	0.01	1
MECH ROOM	Mechanical	2L4T8-SP	2250	10%	10	58	NO RETRO	2250	10%	10	58	$0.00	$0.00	0.00	
MECH ROOM	EM/Night	LED EXIT	8766	100%	3	3	NO RETRO	8766	100%	3	3	$0.00	$0.00	0.00	
COMPUTER LAB	Class	3L4T8-SP-OS	2365	100%	12	82	2L4T8-SP-24RFL-OS	1656	75%	12	54	$56.77	$681.24	0.50	1,1
CLASS 211	Class	3L4T8-SP-OS	2365	100%	12	82	2L4T8-SP-24RFL-OS	1656	75%	12	54	$56.77	$681.24	0.50	1,1
CLASS 211	EM/Night	LED EXIT	8766	100%	1	3	NO RETRO	8766	100%	1	3	$0.00	$0.00	0.00	
WORK ROOM	Offices, Private	3L4T8-SP	2250	50%	4	85	2L4T8-SP-24RFL-OS	1575	38%	4	54	$56.77	$227.08	0.09	4
WORK ROOM	Offices, Private	NOTHING	2250	50%	1	0	WSDT	2250	50%	1	0	$114.31	$114.31	0.00	
CORRIDOR	Halls Middle & Elem	3L4T8-SP	4163	100%	2	85	2L4T8-SP-24RFL	4163	100%	2	54	$56.77	$113.54	0.06	2
CLASS 212	Class	3L4T8-SP-OS	2365	100%	6	82	2L4T8-SP-24RFL-OS	1656	75%	6	54	$56.77	$340.62	0.25	6
CLASS 212	Class	NOTHING	2365	100%	1	0	WCDT	2365	100%	1	0	$256.93	$256.93	0.00	
CLASS 213	Class	3L4T8-SP-OS	2365	100%	10	82	2L4T8-SP-24RFL-OS	1656	75%	10	54	$56.77	$567.70	0.42	1,1
CLASS 213	Class	3L2T8-SP-OS	2365	100%	3	45	NO RETRO	2365	100%	3	45	$0.00	$0.00	0.00	
ELECTRIC ROOM	Mechanical	3L4T8-SP	2250	10%	2	85	2L4T8-SP-24RFL	2250	10%	2	54	$56.77	$113.54	0.01	1
CLASS 214	Class	3L4T8-SP-OS	2365	100%	9	82	2L4T8-SP-24RFL-OS	1656	75%	9	54	$56.77	$510.93	0.37	9
CLASS 214	Class	3L2T8-SP-OS	2365	100%	2	45	NO RETRO	2365	100%	2	45	$0.00	$0.00	0.00	
CLASS 215	Class	3L4T8-SP-OS	2365	100%	9	82	2L4T8-SP-24RFL-OS	1656	75%	9	54	$56.77	$510.93	0.37	9
CLASS 215	Class	3L2T8-SP-OS	2365	100%	2	45	NO RETRO	2365	100%	2	45	$0.00	$0.00	0.00	
CLASS 216	Class	3L4T8-SP-OS	2365	100%	9	82	2L4T8-SP-24RFL-OS	1656	75%	9	54	$56.77	$510.93	0.37	9
CLASS 216	Class	3L2T8-SP-OS	2365	100%	2	45	NO RETRO	2365	100%	2	45	$0.00	$0.00	0.00	
CUSTODIAL / MECH	Custodial	2L4T8-SP	2250	30%	9	58	NO RETRO	2250	30%	9	58	$0.00	$0.00	0.00	
CUSTODIAL / MECH	EM/Night	LED EXIT	8766	100%	1	3	NO RETRO	8766	100%	1	3	$0.00	$0.00	0.00	
GIRLS RESTROOM	Halls Middle & Elem	1L32CF	4163	100%	1	32	NO RETRO	4163	100%	1	32	$0.00	$0.00	0.00	
GIRLS RESTROOM	Halls Middle & Elem	2L4T8-SP	4163	100%	7	58	2L4T8-LP	4163	100%	7	48	$32.46	$227.24	0.07	2
GIRLS RESTROOM	EM/Night	2L4T8-SP-EM	8766	100%	1	58	2L4T8-LP-DUAL-EM	8766	100%	1	50	$127.90	$127.90	0.01	7
BOYS RESTROOM	Halls Middle & Elem	1L32CF	4163	100%	1	32	NO RETRO	4163	100%	1	32	$0.00	$0.00	0.00	
BOYS RESTROOM	Halls Middle & Elem	2L4T8-SP	4163	100%	7	58	2L4T8-LP	4163	100%	7	48	$32.46	$227.24	0.07	2
BOYS RESTROOM	EM/Night	2L4T8-SP-EM	8766	100%	1	58	2L4T8-LP-DUAL-EM	8766	100%	1	50	$127.90	$127.90	0.01	7
STAIR	Halls Middle & Elem	3L4T8-SP	4163	100%	5	85	2L4T8-SP-24RFL	4163	100%	5	54	$56.77	$283.85	0.16	6
STAIR	EM/Night	3L4T8-SP-EM	8766	100%	1	82	2L4T8-SP-24RFL-EM	8766	100%	1	54	$152.21	$152.21	0.03	2
SINKS	Halls Middle & Elem	2L4T8-SP	4163	100%	3	58	2L4T8-LP	4163	100%	3	48	$32.46	$97.39	0.03	1
STAFF RR	Private RR	2L4T8-SP	2250	10%	1	58	2L4T8-SP-NR-OS	1575	8%	1	58	$0.00	$0.00	0.00	3
STAFF RR	Private RR	NOTHING	2250	10%	1	0	WSIR	2250	10%	1	0	$79.32	$79.32	0.00	
TEAM WORK ROOM	Offices, Private	3L4T8-SP	2250	50%	6	85	2L4T8-SP-24RFL-OS	1575	38%	6	54	$56.77	$340.62	0.13	6
TEAM WORK ROOM	Offices, Private	NOTHING	2250	50%	1	0	WSIR	2250	50%	1	0	$79.32	$79.32	0.00	
MAIN STAIR	Halls Middle & Elem	3L4T8-SP	4163	100%	3	85	2L4T8-SP-24RFL-30	4163	100%	3	54	$63.14	$189.43	0.09	3
2ND HALLS	Halls Middle & Elem	3L4T8-SP	4163	100%	3	85	2L4T8-SP-24RFL-24'	4163	100%	3	54	$63.14	$189.43	0.09	3
2ND HALLS	Halls Middle & Elem	3L4T8-SP	4163	100%	29	85	2L4T8-SP-24RFL	4163	100%	29	54	$56.77	$1,646.33	0.90	3,1
2ND HALLS	EM/Night	3L4T8-SP-EM	8766	100%	6	82	2L4T8-SP-24RFL-EM	8766	100%	6	54	$152.21	$913.24	0.17	1,1
2ND HALLS	EM/Night	LED EXIT	8766	100%	6	3	NO RETRO	8766	100%	6	3	$0.00	$0.00	0.00	
2ND DISPLAY CASE	Halls Middle & Elem	1L4T8-SP	4163	100%	3	32	1L4T8-LP	4163	100%	3	25	$30.33	$90.98	0.02	8
1ST HALLS	Halls Middle & Elem	3L4T8-SP	4163	100%	73	85	2L4T8-SP-24RFL	4163	100%	73	54	$56.77	$4,144.21	2.26	9,1
1ST HALLS	EM/Night	3L4T8-SP-EM	8766	100%	18	82	2L4T8-SP-24RFL-EM	8766	100%	18	54	$152.21	$2,739.72	0.50	4,1
1ST HALLS	EM/Night	LED EXIT	8766	100%	12	3	NO RETRO	8766	100%	12	3	$0.00	$0.00	0.00	
1ST DISPLAY CASE	Halls Middle & Elem	1L4T8-SP	4163	100%	6	32	1L4T8-LP	4163	100%	6	25	$30.33	$181.97	0.04	1
TOTALS					**1157**					**1157**			**$82,945.72**	**45.59**	**144**

* Based on ANSI wattages - to be verified by contractor
** Based on manufacturer's wattages - to be verified by contractor

BUILDING: Fraser Valley Elementary
LIGHTING CONTRACTOR: Contractor Name
ELECTRIC CONSUMPTION RATE: $0.05700 per kWh
ELECTRIC DEMAND RATE: $4.35 per kW
HEATING FUEL RATE: $8.290 per MMBtu

ECM 5.1: Lighting system upgrades

		EXISTING					PROPOSED								
AREA	USAGE TYPE	EXISTING FIXTURE DESCRIPTION	ANNUAL HOURS	Demand Div Factor	QTY	WATTS EACH*	RETROFIT DESCRIPTION	ANNUAL HOURS	Demand Div Factor	QTY	WATTS EACH**	UNIT PRICE	TOTAL EXTENDED PRICE	TOTAL KW SAVED	S/ PI
MAIN OFFICE	Offices Admin	4L4T8-LP	2271	90%	4	98	2L4T8-SP-24RFL	2271	90%	4	54	$57.23	$228.91	0.16	
NURSE	Offices Admin	4L4T8-LP	2271	90%	3	98	NO RETRO	2271	90%	3	98	$0.00	$0.00	0.00	
RESTROOM	Private RR	2L100IN	2250	10%	1	200	N2L2T8-SP-2'WL	2250	10%	1	32	$147.88	$147.88	0.02	
PRINCIPAL OFFICE	Offices, Private	4L4T8-LP	2271	50%	4	98	2L4T8-SP-24RFL-OS	1590	38%	4	54	$57.23	$228.91	0.12	
PRINCIPAL OFFICE	Offices, Private	NOTHING	2271	50%	1	0	WSIR	2271	50%	1	0	$79.32	$79.32	0.00	
FILE ROOM	Offices, Private	1L8T8-SP	2271	50%	1	70	1L8T8-SP-NR-OS	1590	38%	1	70	$0.00	$0.00	0.01	
FILE ROOM	Offices, Private	NOTHING	2271	50%	1	0	WSIR	2271	50%	1	0	$79.32	$79.32	0.00	
CONFERENCE ROOM	Conference	4L4T8-LP	2271	40%	4	98	4L4T8-LP-NR-OS	1590	30%	4	98	$0.00	$0.00	0.04	
CONFERENCE ROOM	Conference	NOTHING	2271	40%	1	0	WSIR	2271	40%	1	0	$79.32	$79.32	0.00	
WORK ROOM	Offices, Private	4L4T8-LP	2271	50%	6	98	2L4T8-SP-24RFL-OS	1590	38%	6	54	$57.23	$343.36	0.17	
WORK ROOM	Offices, Private	NOTHING	2271	50%	1	0	WCDT	2271	50%	1	0	$256.93	$256.93	0.00	
ART ROOM	Class	4L4T8-LP-OS	2365	100%	12	98	NO RETRO	2365	100%	12	98	$0.00	$0.00	0.00	
ART STORAGE	Storage	3L4T8-SP	2250	20%	2	85	3L4T8-SP-NR-OS	1575	15%	2	85	$0.00	$0.00	0.01	
ART STORAGE	Storage	NOTHING	2250	20%	1	0	WSIR	2250	20%	1	0	$79.32	$79.32	0.00	
CLASS 173	Class	3L4T8-SP-OS	2365	100%	12	82	NO RETRO	2365	100%	12	82	$0.00	$0.00	0.00	
CLASS 173 RR	Private RR	2L4T8-SP	2250	10%	1	58	NO RETRO	2250	10%	1	58	$0.00	$0.00	0.00	
CLASS 176	Class	3L4T8-SP-OS	2365	100%	12	82	NO RETRO	2365	100%	12	82	$0.00	$0.00	0.00	
CLASS 176 RR	Private RR	2L4T8-SP	2250	10%	1	58	NO RETRO	2250	10%	1	58	$0.00	$0.00	0.00	
CLASS 178	Class	3L4T8-SP-OS	2365	100%	12	82	NO RETRO	2365	100%	12	82	$0.00	$0.00	0.00	
CLASS 178 RR	Private RR	2L4T8-SP	2250	10%	1	58	NO RETRO	2250	10%	1	58	$0.00	$0.00	0.00	
CLASS 183	Class	3L4T8-SP-OS	2365	100%	12	82	NO RETRO	2365	100%	12	82	$0.00	$0.00	0.00	
CLASS 183 RR	Private RR	2L4T8-SP	2250	10%	1	58	NO RETRO	2250	10%	1	58	$0.00	$0.00	0.00	
CLASS 185	Class	3L4T8-SP-OS	2365	100%	12	82	NO RETRO	2365	100%	12	82	$0.00	$0.00	0.00	
CLASS 185 RR	Private RR	2L4T8-SP	2250	10%	1	58	NO RETRO	2250	10%	1	58	$0.00	$0.00	0.00	
CLASS 188	Class	3L4T8-SP-OS	2365	100%	12	82	NO RETRO	2365	100%	12	82	$0.00	$0.00	0.00	
CLASS 188 RR	Private RR	2L4T8-SP	2250	10%	1	58	NO RETRO	2250	10%	1	58	$0.00	$0.00	0.00	
MECH / MAINT	Mechanical	4L4T8-SP	2250	10%	3	112	NO RETRO	2250	10%	3	112	$0.00	$0.00	0.00	
MECH / MAINT	EM/Night	4L4T8-SP-EM	8766	100%	1	112	4L4T8-LP-DUAL	8766	100%	1	96	$61.15	$61.15	0.02	
CLASS 113	Class	4L4T8-LP	2455	100%	12	98	2L4T8-SP-24RFL-OS	1719	75%	12	54	$57.23	$686.72	0.69	1
CLASS 113	Class	NOTHING	2455	100%	1	0	WCDT	2455	100%	1	0	$256.93	$256.93	0.00	
CLASS 114	Class	4L4T8-LP	2455	100%	12	98	2L4T8-SP-24RFL-OS	1719	75%	12	54	$57.23	$686.72	0.69	1
CLASS 114	Class	NOTHING	2455	100%	1	0	WCDT	2455	100%	1	0	$256.93	$256.93	0.00	
CLASS 115	Class	4L4T8-LP	2455	100%	12	98	2L4T8-SP-24RFL-OS	1719	75%	12	54	$57.23	$686.72	0.69	1
CLASS 115	Class	NOTHING	2455	100%	1	0	WCDT	2455	100%	1	0	$256.93	$256.93	0.00	
CLASS 110	Class	4L4T8-LP	2455	100%	10	98	4L4T8-LP-NR-OS	1719	75%	10	98	$0.00	$0.00	0.25	
CLASS 110	Class	2L4T8-SP	2455	100%	2	58	2L4T8-LP-NR-OS	1719	75%	2	51	$0.00	$0.00	0.04	
CLASS 110	Class	NOTHING	2455	100%	1	0	WCDT	2455	100%	1	0	$256.93	$256.93	0.00	
110 SUPPLY	Supply	4L4T8-LP	2271	40%	3	98	2L4T8-SP-24RFL	2271	40%	3	54	$57.23	$171.68	0.05	
RESOURCE 111	Class	4L4T8-LP	2455	100%	8	98	2L4T8-SP-24RFL-OS	1719	75%	8	54	$57.23	$457.81	0.46	1
RESOURCE 111	Class	NOTHING	2455	100%	2	0	CIR	2455	100%	2	0	$256.93	$513.87	0.00	
RESOURCE OFFICE	Offices, Private	4L4T8-LP	2271	50%	1	98	2L4T8-SP-24RFL-OS	1590	38%	1	54	$57.23	$57.23	0.03	
RESOURCE OFFICE	Offices, Private	NOTHING	2271	50%	1	0	WSIR	2271	50%	1	0	$79.32	$79.32	0.00	
RESOURCE SUPPLY	Supply	4L4T8-LP	2271	40%	1	98	2L4T8-SP-24RFL-OS	1590	30%	1	54	$57.23	$57.23	0.02	
RESOURCE SUPPLY	Supply	NOTHING	2271	40%	1	0	WSIR	2271	40%	1	0	$79.32	$79.32	0.00	
RESOURCE CLASS	Class	4L4T8-LP	2455	100%	1	98	2L4T8-SP-24RFL-OS	1719	75%	1	54	$57.23	$57.23	0.06	
RESOURCE CLASS	Class	NOTHING	2455	100%	1	0	WSIR	1719	100%	1	0	$79.32	$79.32	0.00	
CUSTODIAL OFFICE	Offices, Private	1L8T8-SP	2271	50%	1	70	1L8T8-SP-NR-OS	1590	38%	1	70	$0.00	$0.00	0.01	
CUSTODIAL OFFICE	Offices, Private	NOTHING	2271	50%	1	0	WSIR	2271	50%	1	0	$79.32	$79.32	0.00	
CLASS 106	Class	4L4T8-LP	2455	100%	12	98	2L4T8-SP-24RFL-OS	1719	75%	12	54	$57.23	$686.72	0.69	1
CLASS 106	Class	NOTHING	2455	100%	1	0	WCDT	2455	100%	1	0	$256.93	$256.93	0.00	
CLASS 107	Class	4L4T8-LP	2455	100%	12	98	2L4T8-SP-24RFL-OS	1719	75%	12	54	$57.23	$686.72	0.69	1
CLASS 107	Class	NOTHING	2455	100%	1	0	WCDT	2455	100%	1	0	$256.93	$256.93	0.00	
CLASS 108	Class	4L4T8-LP	2455	100%	12	98	2L4T8-SP-24RFL-OS	1719	75%	12	54	$57.23	$686.72	0.69	1
CLASS 108	Class	NOTHING	2455	100%	1	0	WCDT	2455	100%	1	0	$256.93	$256.93	0.00	
BOYS RESTROOM	Halls Middle & Elem	2L4T8-LP	3646	100%	2	51	REMOVE	3646	100%	2	0	$18.56	$37.12	0.10	
BOYS RESTROOM	Halls Middle & Elem	NOTHING	3646	100%	1	0	N2L4T8-SP-8'WR	3646	100%	1	54	$161.94	$161.94	-0.05	-
GIRLS RESTROOM	Halls Middle & Elem	2L4T8-LP	3646	100%	1	51	REMOVE	3646	100%	1	0	$18.56	$18.56	0.05	
GIRLS RESTROOM	Halls Middle & Elem	NOTHING	3646	100%	1	0	N1L4T8-HP-4'WR	3646	100%	1	38	$121.87	$121.87	-0.04	-
KINDERGARTEN 109	Class	4L4T8-LP	2455	100%	14	98	2L4T8-SP-24RFL-OS	1719	75%	14	54	$57.23	$801.17	0.81	2
KINDERGARTEN 109	Class	NOTHING	2455	100%	1	0	WCDT	2455	100%	1	0	$256.93	$256.93	0.00	
RRS	Private RR	2L100IN	2250	10%	2	200	N2L2T8-SP-2'WL	2250	10%	2	32	$147.88	$295.75	0.03	
CUSTODIAL	Custodial	1L4T8-SP	2250	30%	1	32	NO RETRO	2250	30%	1	32	$0.00	$0.00	0.00	
MULTI PURPOSE ROOM	Gym	1L400HID	2523	100%	11	458	N6L4T8-HP-LNS-WG-OS	1766	75%	11	222	$438.15	$4,819.60	3.21	8
MULTI PURPOSE ROOM	Gym	2L8T8-SP	2523	100%	6	110	REMOVE	2523	100%	6	0	$19.79	$118.76	0.66	1
MULTI PURPOSE ROOM	Gym	NOTHING	2523	100%	2	0	WCIR	2523	100%	2	0	$316.78	$633.56	0.00	
KITCHEN	Kitchen	2L4T8-LP	800	100%	10	51	NO RETRO	800	100%	10	51	$0.00	$0.00	0.00	
TABLE STORAGE	Storage	2L8T8-SP	2250	20%	2	110	2L8T8-SP-NR-OS	1575	15%	2	110	$0.00	$0.00	0.01	
TABLE STORAGE	Storage	NOTHING	2250	20%	1	0	WSIR	1575	20%	1	0	$79.32	$79.32	0.00	
MECH / MAINT	Mechanical	2L8T8-SP	2250	10%	2	110	2L8T8-SP-NR-OS	1575	8%	2	110	$0.00	$0.00	0.01	
MECH / MAINT	Mechanical	NOTHING	2250	10%	1	0	WSIR	2250	10%	1	0	$79.32	$79.32	0.00	
GYM STORAGE	Storage	2L8T8-SP	2250	20%	2	110	2L8T8-SP-NR-OS	1575	15%	2	110	$0.00	$0.00	0.01	
GYM STORAGE	Storage	NOTHING	2250	20%	1	0	WSIR	2250	20%	1	0	$79.32	$79.32	0.00	
STAGE / MUSIC CLASS	Class	4L4T8-LP	2455	100%	13	98	2L4T8-SP-24RFL-OS	1719	75%	13	54	$57.23	$743.95	0.75	1
STAGE / MUSIC CLASS	Class	NOTHING	2455	100%	1	0	WCIR	2455	100%	1	0	$256.93	$256.93	0.00	
STAGE CORRIDOR	Halls Middle & Elem	4L4T8-SP	3646	100%	3	112	2L4T8-SP-24RFL	3646	100%	3	54	$57.23	$171.68	0.17	
MUSIC 195	Class	3L4T8-SP-OS	2365	100%	16	82	NO RETRO	2365	100%	16	82	$0.00	$0.00	0.00	
MUSIC 195	Class	3L2T8-SP-OS	2365	100%	2	45	NO RETRO	2365	100%	2	45	$0.00	$0.00	0.00	
MUSIC 195	EM/Night	LED EXIT	8766	100%	2	3	NO RETRO	8766	100%	2	3	$0.00	$0.00	0.00	
BOYS RESTROOM	Halls Middle & Elem	2L4T8-LP	3646	100%	2	51	REMOVE	3646	100%	2	0	$18.56	$37.12	0.10	
BOYS RESTROOM	Halls Middle & Elem	NOTHING	3646	100%	1	0	N2L4T8-SP-8'WR	3646	100%	1	54	$161.94	$161.94	-0.05	-
GIRLS RESTROOM	Halls Middle & Elem	2L4T8-LP	3646	100%	1	51	REMOVE	3646	100%	1	0	$18.56	$18.56	0.05	
GIRLS RESTROOM	Halls Middle & Elem	NOTHING	3646	100%	1	0	N1L4T8-HP-4'WR	3646	100%	1	38	$121.87	$121.87	-0.04	-
CLASS 102	Class	3L4T8-SP-OS	2365	100%	12	82	NO RETRO	2365	100%	12	82	$0.00	$0.00	0.00	

CLASS 103	Class	3L4T8-SP-OS	2365	100%	12	82	NO RETRO	2365	100%	12	82	$0.00	$0.00	0.00	
CLASS 104	Class	3L4T8-SP-OS	2365	100%	12	82	NO RETRO	2365	100%	12	82	$0.00	$0.00	0.00	
CLASS 105	Class	3L4T8-SP-OS	2365	100%	12	82	NO RETRO	2365	100%	12	82	$0.00	$0.00	0.00	
CLASS 120	Class	3L4T8-SP-OS	2365	100%	12	82	NO RETRO	2365	100%	12	82	$0.00	$0.00	0.00	
WORK ROOM	Offices, Private	3L4T8-SP	2271	50%	3	85	2L4T8-SP-24RFL	2271	50%	3	54	$56.77	$170.31	0.05	
WORK ROOM	Offices, Private	NOTHING	2271	50%	1	0	WSIR	2271	50%	1	0	$79.32	$79.32	0.00	
CLASS 101	Class	3L4T8-SP-OS	2365	100%	12	82	NO RETRO	2365	100%	12	82	$0.00	$0.00	0.00	
NEW GYM	Gym	1L250HID	2523	100%	16	295	N6L4T8-HP-LNS-WG-OS	1766	100%	16	222	$438.15	$7,010.33	1.17	5
NEW GYM	Gym	NOTHING	2523	100%	2	0	WCIR	2523	100%	2	0	$316.78	$633.56	0.00	
NEW GYM	EM/Night	LED EXIT	8766	100%	3	3	NO RETRO	8766	100%	3	3	$0.00	$0.00	0.00	
GYM STORAGE	Storage	2L4T8-SP	2250	20%	4	58	2L4T8-SP-NR-OS	1575	15%	4	58	$0.00	$0.00	0.01	
GYM STORAGE	Storage	NOTHING	2250	20%	1	0	WSIR	2250	20%	1	0	$79.32	$79.32	0.00	
WATER RISER	Mechanical	2L4T8-SP	2250	10%	1	58	2L4T8-SP-NR-OS	1575	8%	1	58	$0.00	$0.00	0.00	
WATER RISER	Mechanical	NOTHING	2250	10%	1	0	WSIR	2250	10%	1	0	$79.32	$79.32	0.00	
SHOWER	Storage	2L4T8-SP	2250	20%	1	58	NO RETRO	2250	20%	1	58	$0.00	$0.00	0.00	
COACH OFFICE	Offices, Private	3L4T8-SP	2271	50%	3	85	2L4T8-SP-24RFL	2271	50%	3	54	$56.77	$170.31	0.05	
COACH OFFICE	Offices, Private	NOTHING	2271	50%	1	0	WSIR	2271	50%	1	0	$79.32	$79.32	0.00	
GIRLS RESTROOM	Halls Middle & Elem	3L4T8-SP	3646	100%	2	85	2L4T8-SP-24RFL	3646	100%	2	54	$56.77	$113.54	0.06	
GIRLS RESTROOM	Halls Middle & Elem	2L4T8-SP	3646	100%	3	58	NO RETRO	3646	100%	3	58	$0.00	$0.00	0.00	
BOYS RESTROOM	Halls Middle & Elem	3L4T8-SP	3646	100%	2	85	2L4T8-SP-24RFL	3646	100%	2	54	$56.77	$113.54	0.06	
BOYS RESTROOM	Halls Middle & Elem	2L4T8-SP	3646	100%	3	58	NO RETRO	3646	100%	3	58	$0.00	$0.00	0.00	
CUSTODIAL	Custodial	2L4T8-SP	2250	30%	1	58	2L4T8-SP-NR-OS	1575	23%	1	58	$0.00	$0.00	0.00	
CUSTODIAL	Custodial	NOTHING	2250	30%	1	0	WSIR	2250	30%	1	0	$79.32	$79.32	0.00	
MEDIA CENTER	EM/Night	4L4T8-SP-EM	8766	100%	6	112	4L4T8-SP-NR-ADDSW	1864	100%	6	112	$0.00	$0.00	0.00	4
MEDIA CENTER	EM/Night	2L4T8-SP-EM	8766	100%	3	58	2L4T8-SP-NR-ADDSW	1864	100%	3	58	$0.00	$0.00	0.00	1
MEDIA CENTER	EM/Night	2L4T8-SP-EM	8766	100%	3	58	2L4T8-SP-PCDIM-ADDSW	932	50%	3	58	$91.41	$274.22	0.09	1
MEDIA CENTER	Library	4L4T8-SP	2000	90%	4	112	NO RETRO	2000	90%	4	112	$0.00	$0.00	0.00	
MEDIA CENTER	Library	2L4T8-SP	2000	90%	2	58	NO RETRO	2000	90%	2	58	$0.00	$0.00	0.00	
MEDIA CENTER	Library	2L4T8-SP	2000	90%	2	58	2L4T8-SP-PCDIM	1000	45%	2	58	$91.41	$182.81	0.05	
MEDIA CENTER	Library	1L32CF	2000	90%	11	32	1L32CF-NR-PC	1000	45%	11	32	$0.00	$0.00	0.16	
MEDIA CENTER	Library	1L32CF	2000	90%	4	32	NO RETRO	2000	90%	4	32	$0.00	$0.00	0.00	
MEDIA CENTER	Library	NOTHING	2000	90%	1	0	PHOTOCELL	2000	90%	1	0	$95.25	$95.25	0.00	
MEDIA CENTER	Library	2LF40-BIAX	2000	90%	14	71	NO RETRO	2000	90%	14	71	$0.00	$0.00	0.00	
MEDIA CENTER	EM/Night	LED EXIT	8766	100%	1	3	NO RETRO	8766	100%	1	3	$0.00	$0.00	0.00	
OFFICE / WORK ROOM	Offices, Private	3L4T8-SP	2271	50%	4	85	2L4T8-SP-24RFL	2271	50%	4	54	$56.77	$227.08	0.06	
OFFICE / WORK ROOM	Offices, Private	NOTHING	2271	50%	1	0	WSIR	2271	50%	1	0	$79.32	$79.32	0.00	
READING NOOK	Library	3L4T8-SP	2000	90%	4	85	2L4T8-SP-24RFL	2000	90%	4	54	$56.77	$227.08	0.11	
READING NOOK	Library	NOTHING	2000	90%	1	0	WSIR	2000	90%	1	0	$79.32	$79.32	0.00	
COMPUTER LAB	Class	3L4T8-SP-OS	2455	100%	12	82	NO RETRO	2455	100%	12	82	$0.00	$0.00	0.00	
TECH OFFICE	Offices, Private	3L4T8-SP	2271	50%	1	85	2L4T8-SP-24RFL	2271	50%	1	54	$56.77	$56.77	0.02	
TECH OFFICE	Offices, Private	NOTHING	2271	50%	1	0	WSIR	2271	50%	1	0	$79.32	$79.32	0.00	
PENTHOUSE MECH	Mechanical	2L4T8-SP	2250	10%	8	58	NO RETRO	2250	10%	8	58	$0.00	$0.00	0.00	
ELECTRICAL ROOM	Mechanical	2L4T8-SP	2250	10%	1	58	NO RETRO	2250	10%	1	58	$0.00	$0.00	0.00	
STORAGE	Storage	2L4T8-SP	2250	20%	1	58	NO RETRO	2250	20%	1	58	$0.00	$0.00	0.00	
COMMONS ATRIUM	Halls Middle & Elem	1L400HID	3646	100%	4	458	N6L4T8-HP-DEC	3646	100%	4	222	$274.11	$1,096.45	0.94	3
COMMONS ATRIUM	Halls Middle & Elem	1L400HID	3646	100%	2	458	N6L4T8-HP-DEC-PC	1823	50%	2	222	$274.11	$548.23	0.69	2
COMMONS ATRIUM	Halls Middle & Elem	NOTHING	3646	100%	1	0	PHOTOCELL	3646	100%	1	0	$95.25	$95.25	0.00	
COMMONS ATRIUM	Halls Middle & Elem	1L32CF	3646	100%	3	32	1L32CF-NR-PC	1823	50%	3	32	$0.00	$0.00	0.05	
COMMONS ATRIUM	Halls Middle & Elem	NOTHING	3646	100%	1	0	PHOTOCELL	3646	100%	1	0	$95.25	$95.25	0.00	
COMMONS ATRIUM	Halls Middle & Elem	1L32CF	3646	100%	3	32	NO RETRO	3646	100%	3	32	$0.00	$0.00	0.00	
COMMONS ATRIUM	Halls Middle & Elem	2L26CF	3646	100%	6	54	NO RETRO	3646	100%	6	54	$0.00	$0.00	0.00	
COMMONS ATRIUM	EM/Night	LED EXIT	8766	100%	2	3	NO RETRO	8766	100%	2	3	$0.00	$0.00	0.00	
HALL SOUTH	Halls Middle & Elem	2L4T8-SP	3646	100%	20	58	NO RETRO	3646	100%	20	58	$0.00	$0.00	0.00	
HALL SOUTH	Halls Middle & Elem	1L32CF	3646	100%	7	32	NO RETRO	3646	100%	7	32	$0.00	$0.00	0.00	
HALL SOUTH	EM/Night	LED EXIT	8766	100%	2	3	NO RETRO	8766	100%	2	3	$0.00	$0.00	0.00	
PE HALL	Halls Middle & Elem	2L4T8-SP	3646	100%	5	58	NO RETRO	3646	100%	5	58	$0.00	$0.00	0.00	
PE HALL	Halls Middle & Elem	1L32CF	3646	100%	6	32	1L32CF-NR-PC	1823	50%	6	32	$0.00	$0.00	0.10	
PE HALL	Halls Middle & Elem	NOTHING	3646	100%	1	0	PHOTOCELL	3646	100%	1	0	$95.25	$95.25	0.00	
PE HALL	EM/Night	LED EXIT	8766	100%	1	3	NO RETRO	8766	100%	1	3	$0.00	$0.00	0.00	
CENTER HALLS	Halls Middle & Elem	4L4T8-LP	3646	100%	26	98	2L4T8-SP-24RFL	3646	100%	26	54	$57.23	$1,487.89	1.14	4
CENTER HALLS	EM/Night	LED EXIT	8766	100%	7	3	NO RETRO	8766	100%	7	3	$0.00	$0.00	0.00	
NORTH HALLS	Halls Middle & Elem	3L4T8-SP	3646	100%	8	85	2L4T8-SP-24RFL	3646	100%	8	54	$56.77	$454.16	0.25	
NORTH HALLS	Halls Middle & Elem	2L26CF	3646	100%	12	54	NO RETRO	3646	100%	12	54	$0.00	$0.00	0.00	
NORTH HALLS	EM/Night	LED EXIT	8766	100%	1	3	NO RETRO	8766	100%	1	3	$0.00	$0.00	0.00	
MODULAR CLASS / STOR	Storage	4L4T8-SP	2250	20%	12	112	NO RETRO	2250	20%	12	112	$0.00	$0.00	0.00	
TOTALS					675					675			**$31,932.82**	**16.43**	5

* Based on ANSI wattages - to be verified by contractor
** Based on manufacturer's wattages - to be verified by contractor

BUILDING: Granby Elementary School
LIGHTING CONTRACTOR: Contractor Name
ELECTRIC CONSUMPTION RATE: $0.06600 per kWh
ELECTRIC DEMAND RATE: $4.35 per kW
HEATING FUEL RATE: $8.290 per MMBtu

ECM 5.1: Lighting system upgrades

		EXISTING					PROPOSED								
AREA	USAGE TYPE	EXISTING FIXTURE DESCRIPTION	ANNUAL HOURS	Demand Div Factor	QTY	WATTS EACH*	RETROFIT DESCRIPTION	ANNUAL HOURS	Demand Div Factor	QTY	WATTS EACH**	UNIT PRICE	TOTAL EXTENDED PRICE	TOTAL KW SAVED	S/ PI
CLASS 130	Class	3L4T8-LP-DUAL	2455	100%	13	80	3L4T8-LP-DUAL-NR-OS	1719	75%	13	80	$0.00	$0.00	0.26	
CLASS 130	Class	NOTHING	2455	100%	1	0	WCDT	2455	100%	1	0	$256.93	$256.93	0.00	
RRS	Private RR	2L2T12	2250	10%	2	49	2L2T8-LP	2250	10%	2	28	$36.24	$72.48	0.00	
CLASS 129	Class	3L4T8-LP-DUAL	2455	100%	13	80	3L4T8-LP-DUAL-NR-OS	1719	75%	13	80	$0.00	$0.00	0.26	
CLASS 129	Class	NOTHING	2455	100%	1	0	WCDT	2455	100%	1	0	$256.93	$256.93	0.00	
RRS	Private RR	2L2T12	2250	10%	2	49	2L2T8-LP	2250	10%	2	28	$36.24	$72.48	0.00	
COMPUTER LAB 128	Class	3L4T8-LP-DUAL	2455	100%	10	80	3L4T8-LP-DUAL-NR-OS	1719	75%	10	80	$0.00	$0.00	0.20	
COMPUTER LAB 129	Class	NOTHING	2455	100%	1	0	WCDT	2455	100%	1	0	$256.93	$256.93	0.00	
CLASS 139	Class	3L4T8-LP-DUAL	2455	100%	13	80	3L4T8-LP-DUAL-NR-OS	1719	75%	13	80	$0.00	$0.00	0.26	
CLASS 139	Class	NOTHING	2455	100%	1	0	WCDT	2455	100%	1	0	$256.93	$256.93	0.00	
RRS	Private RR	2L2T12	2250	10%	2	49	2L2T8-LP	2250	10%	2	28	$36.24	$72.48	0.00	
CLASS 138	Class	3L4T8-LP-DUAL	2455	100%	13	80	3L4T8-LP-DUAL-NR-OS	1719	75%	13	80	$0.00	$0.00	0.26	
CLASS 138	Class	NOTHING	2455	100%	1	0	WCDT	2455	100%	1	0	$256.93	$256.93	0.00	
RRS	Private RR	2L2T12	2250	10%	2	49	2L2T8-LP	2250	10%	2	28	$36.24	$72.48	0.00	
CLASS 137	Class	3L4T8-LP-DUAL	2455	100%	15	80	3L4T8-LP-DUAL-NR-OS	1719	75%	15	80	$0.00	$0.00	0.30	
CLASS 137	Class	NOTHING	2455	100%	1	0	WCDT	2455	100%	1	0	$256.93	$256.93	0.00	
CLASS 136	Class	3L4T8-LP-DUAL	2455	100%	15	80	3L4T8-LP-DUAL-NR-OS	1719	75%	15	80	$0.00	$0.00	0.30	
CLASS 136	Class	NOTHING	2455	100%	1	0	WCDT	2455	100%	1	0	$256.93	$256.93	0.00	
MEDIA 124	Library	3L4T8-LP	2000	90%	8	76	3L4T8-LP-NR-OS	1400	68%	8	76	$0.00	$0.00	0.14	
MEDIA 124	Library	NOTHING	2000	90%	1	0	WCDT	2000	90%	1	0	$256.93	$256.93	0.00	
MEDIA 124	Library	3L4T8-LP	2000	90%	36	76	3L4T8-LP-NR-OS	1400	68%	36	76	$0.00	$0.00	0.62	1
MEDIA 124	Library	NOTHING	2000	90%	2	0	WCDT	2000	90%	2	0	$256.93	$513.87	0.00	
MEDIA 124	EM/Night	LED EXIT	8766	100%	1	3	NO RETRO	8766	100%	1	3	$0.00	$0.00	0.00	
MEDIA SUPPLY 123	Supply	3L4T8-LP-DUAL	2000	40%	9	80	3L4T8-LP-DUAL-NR-OS	1400	30%	9	80	$0.00	$0.00	0.07	
MEDIA SUPPLY 123	Supply	NOTHING	2000	40%	1	0	WCDT	2000	40%	1	0	$256.93	$256.93	0.00	
MEDIA OFFICE 125	Offices, Private	3L4T8-LP-DUAL	2271	50%	4	80	3L4T8-LP-DUAL-NR-OS	1590	38%	4	80	$0.00	$0.00	0.04	
MEDIA OFFICE 125	Offices, Private	NOTHING	2271	50%	1	0	WCDT	2271	50%	1	0	$256.93	$256.93	0.00	
WORK ROOM 126	Offices, Private	3L4T8-LP-DUAL	2271	50%	3	80	3L4T8-LP-DUAL-NR-OS	1590	38%	3	80	$0.00	$0.00	0.03	
WORK ROOM 126	Offices, Private	NOTHING	2271	50%	1	0	WSIR-2P	2271	50%	1	0	$79.32	$79.32	0.00	
STORAGE 127	Storage	4L4T8-LP	2250	20%	1	98	2L4T8-SP-24RFL-OS	1575	15%	1	54	$57.23	$57.23	0.01	
STORAGE 127	Storage	NOTHING	2250	20%	1	0	WSIR	2250	20%	1	0	$79.32	$79.32	0.00	
RRS	Common RR	2L4T8-LP	3646	100%	8	51	NO RETRO	3646	100%	8	51	$0.00	$0.00	0.00	
RESOURCE 117	Class	3L4T8-LP-DUAL	2455	100%	7	80	3L4T8-LP-DUAL-NR-OS	1719	75%	7	80	$0.00	$0.00	0.14	
RESOURCE 117	Class	NOTHING	2455	100%	1	0	WCDT	2455	100%	1	0	$256.93	$256.93	0.00	
SUPPLY 118	Supply	3L4T8-LP	2271	40%	2	76	3L4T8-LP-NR-OS	1590	30%	2	76	$0.00	$0.00	0.02	
SUPPLY 118	Supply	NOTHING	2271	40%	1	0	WSIR	2271	40%	1	0	$79.32	$79.32	0.00	
CLASS 119	Class	3L4T8-LP	2455	100%	2	76	3L4T8-LP-NR-OS	1719	75%	2	76	$0.00	$0.00	0.04	
CLASS 119	Class	NOTHING	2455	100%	1	0	WSIR	2455	100%	1	0	$79.32	$79.32	0.00	
OFFICE 120	Offices, Private	3L4T8-LP	2271	50%	2	76	3L4T8-LP-NR-OS	1590	38%	2	76	$0.00	$0.00	0.02	
OFFICE 120	Offices, Private	NOTHING	2271	50%	1	0	WSIR	2271	50%	1	0	$79.32	$79.32	0.00	
OFFICE 116	Offices, Private	3L4T8-LP	2271	50%	2	76	3L4T8-LP-NR-OS	1590	38%	2	76	$0.00	$0.00	0.02	
OFFICE 116	Offices, Private	NOTHING	2271	50%	1	0	WSIR	2271	50%	1	0	$79.32	$79.32	0.00	
OFFICE 115	Offices, Private	3L4T8-LP	2271	50%	2	76	3L4T8-LP-NR-OS	1590	38%	2	76	$0.00	$0.00	0.02	
OFFICE 115	Offices, Private	NOTHING	2271	50%	1	0	WSIR	2271	50%	1	0	$79.32	$79.32	0.00	
OFFICE 114	Offices, Private	3L4T8-LP	2271	50%	2	76	3L4T8-LP-NR-OS	1590	38%	2	76	$0.00	$0.00	0.02	
OFFICE 114	Offices, Private	NOTHING	2271	50%	1	0	WSIR	2271	50%	1	0	$79.32	$79.32	0.00	
WOMENS STAFF RR 111	Private RR	2L4T8-LP	2250	10%	1	51	2L4T8-LP-NR-OS	1575	8%	1	51	$0.00	$0.00	0.00	
WOMENS STAFF RR 111	Private RR	NOTHING	2250	10%	1	0	WSIR	2250	10%	1	0	$79.32	$79.32	0.00	
MENS STAFF RR 110	Private RR	2L4T8-LP	2250	10%	1	51	2L4T8-LP-NR-OS	1575	8%	1	51	$0.00	$0.00	0.00	
MENS STAFF RR 110	Private RR	NOTHING	2250	10%	1	0	WSIR	2250	10%	1	0	$79.32	$79.32	0.00	
LAUNDRY 105	Custodial	2L4T8-LP	2250	30%	2	51	2L4T8-LP-NR-OS	1575	23%	2	51	$0.00	$0.00	0.01	
LAUNDRY 105	Custodial	NOTHING	2250	30%	1	0	WSIR	2250	30%	1	0	$79.32	$79.32	0.00	
ELECTRIC ROOM	Mechanical	2L4T8-LP	2250	10%	1	51	NO RETRO	2250	10%	1	51	$0.00	$0.00	0.00	
CUSTODIAL 107	Custodial	2L4T8-LP	2250	30%	1	51	2L4T8-LP-NR-OS	1575	23%	1	51	$0.00	$0.00	0.00	
CUSTODIAL 107	Custodial	NOTHING	2250	30%	1	0	WSIR	2250	30%	1	0	$79.32	$79.32	0.00	
CLASS 101	Class	3L4T8-LP-DUAL	2455	100%	15	80	3L4T8-LP-DUAL-NR-OS	1719	75%	15	80	$0.00	$0.00	0.30	
CLASS 101	Class	NOTHING	2455	100%	1	0	WCDT	2455	100%	1	0	$256.93	$256.93	0.00	
CLASS 102	Class	3L4T8-LP-DUAL	2455	100%	15	80	3L4T8-LP-DUAL-NR-OS	1719	75%	15	80	$0.00	$0.00	0.30	
CLASS 102	Class	NOTHING	2455	100%	1	0	WCDT	2455	100%	1	0	$256.93	$256.93	0.00	
CLASS 103	Class	3L4T8-LP-DUAL	2455	100%	15	80	3L4T8-LP-DUAL-NR-OS	1719	75%	15	80	$0.00	$0.00	0.30	
CLASS 103	Class	NOTHING	2455	100%	1	0	WCDT	2455	100%	1	0	$256.93	$256.93	0.00	
CLASS 104	Class	3L4T8-LP-DUAL	2455	100%	15	80	3L4T8-LP-DUAL-NR-OS	1719	75%	15	80	$0.00	$0.00	0.30	
CLASS 104	Class	NOTHING	2455	100%	1	0	WCDT	2455	100%	1	0	$256.93	$256.93	0.00	
TITLE 1	Class	3L4T8-SP	2455	100%	4	85	3L4T8-SP-NR-OS	1719	75%	4	85	$0.00	$0.00	0.09	
TITLE 1	Class	NOTHING	2455	100%	1	0	WCDT	2455	100%	1	0	$256.93	$256.93	0.00	
3RD GRADE	Class	3L4T8-SP	2455	100%	9	85	3L4T8-SP-NR-OS	1719	75%	9	85	$0.00	$0.00	0.19	
TITLE 1	Class	3L4T8-SP	2455	100%	4	85	3L4T8-SP-NR-OS	1719	75%	4	85	$0.00	$0.00	0.09	
TITLE 1	Class	NOTHING	2455	100%	1	0	WCDT	2455	100%	1	0	$256.93	$256.93	0.00	
3RD GRADE	Class	3L4T8-SP	2455	100%	9	85	3L4T8-SP-NR-OS	1719	75%	9	85	$0.00	$0.00	0.19	
3RD GRADE	Class	NOTHING	2455	100%	1	0	WCDT	2455	100%	1	0	$256.93	$256.93	0.00	
MAIN OFFICE	Common Admin	3L4T8-SP	2271	100%	4	85	NO RETRO	2271	100%	4	85	$0.00	$0.00	0.00	
MAIN OFFICE	EM/Night	LED EXIT	8766	100%	4	3	NO RETRO	8766	100%	4	3	$0.00	$0.00	0.00	
OFFICE CORRIDORS	Common Admin	4L4T8-LP	3646	100%	4	98	2L4T8-SP-24RFL	3646	100%	4	54	$57.23	$228.91	0.18	
OFFICE CORRIDORS	Common Admin	3L4T8-SP	3646	100%	3	85	NO RETRO	3646	100%	3	85	$0.00	$0.00	0.00	
NURSE	Common Admin	3L4T8-SP	3646	100%	2	85	NO RETRO	3646	100%	2	85	$0.00	$0.00	0.00	
NURSE RR	Private RR	3L4T8-SP	2250	10%	1	85	NO RETRO	2250	10%	1	85	$0.00	$0.00	0.00	
PRINCIPAL OFFICE	Offices, Private	4L4T8-LP	2271	50%	2	98	4L4T8-LP-NR-OS	1590	38%	2	98	$0.00	$0.00	0.02	
PRINCIPAL OFFICE	Offices, Private	NOTHING	2271	50%	1	0	WSDT	2271	50%	1	0	$114.31	$114.31	0.00	
CONFERENCE ROOM	Conference	4L4T8-LP	2271	40%	4	98	4L4T8-LP-NR-OS	1590	30%	4	98	$0.00	$0.00	0.04	
CONFERENCE ROOM	Conference	NOTHING	2271	40%	1	0	WSIR	2271	40%	1	0	$79.32	$79.32	0.00	
RECORDS	Common Admin	1L8T8-SP	2271	100%	1	70	1L8T8-SP-NR-OS	1590	75%	1	70	$0.00	$0.00	0.02	
RECORDS	Common Admin	NOTHING	2271	100%	1	0	WSIR	2271	100%	1	0	$79.32	$79.32	0.00	
OFFICE	Offices, Private	4L4T8-LP	2271	50%	2	98	2L4T8-SP-24RFL-OS	1590	38%	2	54	$57.23	$114.45	0.06	

OFFICE	Offices, Private	NOTHING	2271	50%	1	0	WSDT	2271	50%	1	0	$114.31	$114.31	0.00	
OFFICE	Offices, Private	4L4T8-LP	2271	50%	2	98	2L4T8-SP-24RFL-OS	1590	38%	2	54	$57.23	$114.45	0.06	
RR	Private RR	2L100IN	2271	10%	1	200	N2L2T8-SP-2'WL	2271	10%	1	32	$147.88	$147.88	0.02	
RRS	Private RR	2L100IN	2271	10%	2	200	N2L2T8-SP-2'WL	2271	10%	2	32	$147.88	$295.75	0.03	
MAINT OFFICE	Offices, Private	2L8T8-SP	2271	50%	1	110	NO RETRO	2271	50%	1	110	$0.00	$0.00	0.00	
MAIL ROOM	Offices, Private	1L8T8-SP	2271	50%	1	70	NO RETRO	2271	50%	1	70	$0.00	$0.00	0.00	
WORK ROOM	Offices, Private	4L4T8-LP	2271	50%	8	98	2L4T8-SP-24RFL-OS	1590	38%	8	54	$57.23	$457.81	0.23	1
WORK ROOM	Offices, Private	NOTHING	2271	50%	1	0	WCIR	2271	50%	1	0	$256.93	$256.93	0.00	
COUNSELLING OFFICE	Offices, Private	4L4T8-LP	2271	50%	2	98	2L4T8-SP-24RFL-OS	1590	38%	2	54	$57.23	$114.45	0.06	
COUNSELLING OFFICE	Offices, Private	NOTHING	2271	50%	1	0	WSIR	2271	50%	1	0	$79.32	$79.32	0.00	
COUNSELLING OFFICE	Offices, Private	4L4T8-LP	2271	50%	2	98	2L4T8-SP-24RFL-OS	1590	38%	2	54	$57.23	$114.45	0.06	
COUNSELLING OFFICE	Offices, Private	NOTHING	2271	50%	1	0	WSIR	2271	50%	1	0	$79.32	$79.32	0.00	
MECHANICAL	Mechanical	1L8T8-SP	2271	10%	2	70	NO RETRO	2271	10%	2	70	$0.00	$0.00	0.00	
CAFETERIA	Halls Middle & Elem	2L4T8-LP	2250	100%	34	51	2L4T8-LP-NR-OS	1575	75%	34	51	$0.00	$0.00	0.43	1
CAFETERIA	Halls Middle & Elem	NOTHING	2250	100%	2	0	WCIR	2250	100%	2	0	$256.93	$513.87	0.00	
CAFETERIA	EM/Night	LED EXIT	8766	100%	1	3	NO RETRO	8766	100%	1	3	$0.00	$0.00	0.00	
KITCHEN	Kitchen	2L4T8-LP	800	100%	12	51	NO RETRO	800	100%	12	51	$0.00	$0.00	0.00	
KIT LOCKER	Kitchen	1L4T8-SP	800	100%	1	32	NO RETRO	800	100%	1	32	$0.00	$0.00	0.00	
KITCHEN RR	Private RR	2L100IN	800	10%	1	200	N2L2T8-SP-2'WL	800	10%	1	32	$147.88	$147.88	0.02	
STOR ROOM	Storage	1L8T8-SP	800	20%	1	70	NO RETRO	800	20%	1	70	$0.00	$0.00	0.00	
RRS	Common RR	2L4T8-LP	3646	100%	5	51	REMOVE	3646	100%	5	0	$18.56	$92.81	0.26	
RRS	Common RR	NOTHING	3646	100%	2	0	N2L4T8-SP-8'WR	3646	100%	2	54	$161.94	$323.88	-0.11	-
RRS	Common RR	NOTHING	3646	100%	1	0	N1L4T8-SP-4'WR	3646	100%	1	28	$121.87	$121.87	-0.03	-
MUSIC	Class	4L4T8-LP	2455	100%	18	98	2L4T8-SP-24RFL-OS	1719	75%	18	54	$57.23	$1,030.08	1.04	2
MUSIC	Class	NOTHING	2455	100%	1	0	WCDT	2455	100%	1	0	$256.93	$256.93	0.00	
MUSIC	EM/Night	LED EXIT	8766	100%	1	3	NO RETRO	8766	100%	1	3	$0.00	$0.00	0.00	
ART	Class	4L4T8-LP	2455	100%	14	98	4L4T8-LP-NR-OS	1719	75%	14	98	$0.00	$0.00	0.34	1
ART	Class	NOTHING	2455	100%	1	0	WCDT	2455	100%	1	0	$256.93	$256.93	0.00	
ART	Class	LED EXIT	2455	100%	1	3	NO RETRO	2455	100%	1	3	$0.00	$0.00	0.00	
ART STORAGE	Storage	1L8T8-SP	2250	20%	1	70	1L8T8-SP-NR-OS	1575	15%	1	70	$0.00	$0.00	0.00	
ART STORAGE	Storage	NOTHING	2250	20%	1	0	WSIR	2250	20%	1	0	$79.32	$79.32	0.00	
PRESCHOOL	Class	4L4T8-LP	2455	100%	15	98	2L4T8-SP-24RFL-OS	1719	75%	15	54	$57.23	$858.40	0.86	2
PRESCHOOL	Class	NOTHING	2455	100%	1	0	WCDT	2455	100%	1	0	$256.93	$256.93	0.00	
RRS	Private RR	2L100IN	2250	10%	2	200	N2L2T8-SP-2'WL	2250	10%	2	32	$147.88	$295.75	0.03	
GYM	Gym	1L400HID	2330	100%	24	458	N6L4T8-HP-LNS-WG-OS	1631	75%	24	222	$438.15	$10,515.50	7.00	1(
GYM	Gym	NOTHING	2330	100%	2	0	WCIR	2330	100%	2	0	$316.78	$633.56	0.00	
GYM	EM/Night	LED EXIT	8766	100%	3	3	NO RETRO	8766	100%	3	3	$0.00	$0.00	0.00	
VESTIBULE	Halls Middle & Elem	1L100IN	3646	100%	1	100	N1L13CF-CPY	3646	100%	1	14	$87.84	$87.84	0.09	
GYM STORAGE	Storage	2L4T8-LP	2250	20%	1	51	NO RETRO	2250	20%	1	51	$0.00	$0.00	0.00	
EQUIP STORAGE	Storage	2L8T8-SP	2250	20%	7	110	2L8T8-SP-NR-OS	1575	15%	7	110	$0.00	$0.00	0.04	
EQUIP STORAGE	Storage	2L4T8-LP	2250	20%	4	51	2L4T8-LP-NR-OS	1575	15%	4	51	$0.00	$0.00	0.01	
EQUIP STORAGE	Storage	NOTHING	2250	20%	1	0	WCIR	2250	20%	1	0	$256.93	$256.93	0.00	
RRS	Common RR	2L4T8-LP	3646	100%	4	51	N1L4T8-SP-4'WR	3646	100%	4	28	$123.11	$492.42	0.09	
WORK ROOM 125	Offices, Private	2L4T8-LP	2271	50%	2	51	2L4T8-LP-NR-OS	1590	38%	2	51	$0.00	$0.00	0.01	
WORK ROOM 125	Offices, Private	NOTHING	2271	50%	1	0	WSIR	2271	50%	1	0	$79.32	$79.32	0.00	
CLASS 301	Class	3L4T8-SP-OS	2455	100%	7	82	NO RETRO	2455	100%	7	82	$0.00	$0.00	0.00	
RR	Private RR	2L4T8-SP	2250	10%	1	58	NO RETRO	2250	10%	1	58	$0.00	$0.00	0.00	
OFFICE	Offices, Private	3L4T8-SP	2271	50%	2	85	3L4T8-SP-NR-OS	1590	38%	2	85	$0.00	$0.00	0.02	
OFFICE	Offices, Private	NOTHING	2271	50%	1	0	WSIR	2271	50%	1	0	$79.32	$79.32	0.00	
CLASS 303	Class	3L4T8-SP-OS	2455	100%	7	82	NO RETRO	2455	100%	7	82	$0.00	$0.00	0.00	
CLASS 305	Class	3L4T8-SP-OS	2455	100%	12	82	NO RETRO	2455	100%	12	82	$0.00	$0.00	0.00	
RR	Private RR	2L4T8-SP	2250	10%	1	58	NO RETRO	2250	10%	1	58	$0.00	$0.00	0.00	
CLASS 307	Class	3L4T8-SP-OS	2455	100%	12	82	NO RETRO	2455	100%	12	82	$0.00	$0.00	0.00	
RR	Private RR	2L4T8-SP	2250	10%	1	58	NO RETRO	2250	10%	1	58	$0.00	$0.00	0.00	
CLASS 309	Class	3L4T8-SP-OS	2455	100%	11	82	NO RETRO	2455	100%	11	82	$0.00	$0.00	0.00	
RR	Private RR	2L4T8-SP	2250	10%	1	58	NO RETRO	2250	10%	1	58	$0.00	$0.00	0.00	
CLASS 310	Class	3L4T8-SP	2455	100%	4	85	3L4T8-SP-NR-OS	1719	75%	4	85	$0.00	$0.00	0.09	
RR	Private RR	NOTHING	2250	10%	1	0	WSDT	2250	10%	1	0	$114.31	$114.31	0.00	
CLASS 308	Class	3L4T8-SP-OS	2455	100%	15	82	NO RETRO	2455	100%	15	82	$0.00	$0.00	0.00	
RR	Private RR	2L4T8-SP	2250	10%	1	58	NO RETRO	2250	10%	1	58	$0.00	$0.00	0.00	
CLASS 306	Class	3L4T8-SP-OS	2455	100%	12	82	NO RETRO	2455	100%	12	82	$0.00	$0.00	0.00	
RR	Private RR	2L4T8-SP	2250	10%	1	58	NO RETRO	2250	10%	1	58	$0.00	$0.00	0.00	
CLASS 304	Class	3L4T8-SP-OS	2455	100%	12	82	NO RETRO	2455	100%	12	82	$0.00	$0.00	0.00	
RR	Private RR	2L4T8-SP	2250	10%	1	58	NO RETRO	2250	10%	1	58	$0.00	$0.00	0.00	
CLASS 302	Class	3L4T8-SP-OS	2455	100%	12	82	NO RETRO	2455	100%	12	82	$0.00	$0.00	0.00	
CLASS 302	Class	2LU6T8-SP-OS	2455	100%	3	58	NO RETRO	2455	100%	3	58	$0.00	$0.00	0.00	
RR	Private RR	2L4T8-SP	2250	10%	1	58	NO RETRO	2250	10%	1	58	$0.00	$0.00	0.00	
OFFICE 300	Offices, Private	3L4T8-SP	2271	50%	2	85	3L4T8-SP-NR-OS	1590	38%	2	85	$0.00	$0.00	0.02	
OFFICE 300	Offices, Private	NOTHING	2271	50%	1	0	WSIR	2271	50%	1	0	$79.32	$79.32	0.00	
HALL 300	Halls Middle & Elem	3L4T8-SP	3646	100%	10	85	2L4T8-SP-24RFL	3646	100%	10	54	$56.77	$567.70	0.31	1
HALL 300	Halls Middle & Elem	2L26CF	3646	100%	4	54	NO RETRO	3646	100%	4	54	$0.00	$0.00	0.00	
HALL 300	EM/Night	LED EXIT	8766	100%	3	3	NO RETRO	8766	100%	3	3	$0.00	$0.00	0.00	
GYM HALL	Halls Middle & Elem	2L4T8-LP	3646	100%	12	51	NO RETRO	3646	100%	12	51	$0.00	$0.00	0.00	
GYM HALL	EM/Night	LED EXIT	8766	100%	3	3	NO RETRO	8766	100%	3	3	$0.00	$0.00	0.00	
MUSIC HALLWAY	Halls Middle & Elem	4L4T8-LP	3646	100%	11	98	2L4T8-SP-24RFL	3646	100%	11	54	$57.23	$629.49	0.48	1
MUSIC HALLWAY	EM/Night	LED EXIT	8766	100%	2	3	NO RETRO	8766	100%	2	3	$0.00	$0.00	0.00	
MUSIC HALLWAY DISP	Halls Middle & Elem	2L4T8-LP	3646	100%	2	51	N1L4T8-SP-ST	3646	100%	2	28	$102.58	$205.15	0.05	
CENTER HALL	Halls Middle & Elem	2L4T8-LP	3646	100%	7	51	NO RETRO	3646	100%	7	51	$0.00	$0.00	0.00	
CENTER HALL	EM/Night	LED EXIT	8766	100%	2	3	NO RETRO	8766	100%	2	3	$0.00	$0.00	0.00	
HALL 100	Halls Middle & Elem	2L4T8-LP	3646	100%	19	51	NO RETRO	3646	100%	19	51	$0.00	$0.00	0.00	
HALL 100	EM/Night	LED EXIT	8766	100%	4	3	NO RETRO	8766	100%	4	3	$0.00	$0.00	0.00	
3RD GRADE	Class	NOTHING	2455	100%	1	0	WCDT	2455	100%	1	0	$256.93	$256.93	0.00	
KITCHEN	EM/Night	LED EXIT	8766	100%	1	3	NO RETRO	8766	100%	1	3	$0.00	$0.00	0.00	
TOTALS					**737**					**737**			**$27,061.19**	**16.62**	**4(**

* Based on ANSI wattages - to be verified by contractor
** Based on manufacturer's wattages - to be verified by contractor

BUILDING: Grand Lake Elementary
LIGHTING CONTRACTOR: Contractor Name
ELECTRIC CONSUMPTION RATE: $0.07700 per kWh
ELECTRIC DEMAND RATE: $4.35 per kW
HEATING FUEL RATE: $8.290 per MMBtu

ECM 5.1: Lighting system upgrades

		EXISTING					PROPOSED								
AREA	USAGE TYPE	EXISTING FIXTURE DESCRIPTION	ANNUAL HOURS	Demand Div Factor	QTY	WATTS EACH*	RETROFIT DESCRIPTION	ANNUAL HOURS	Demand Div Factor	QTY	WATTS EACH**	UNIT PRICE	TOTAL EXTENDED PRICE	TOTAL KW SAVED	S/ PI
MAIN OFFICE	Common Admin	4L4T8-LP	2271	100%	4	98	2L4T8-SP-24RFL	2271	100%	4	54	$57.23	$228.91	0.18	-
NURSE	Common Admin	4L4T8-LP	2271	100%	3	98	NO RETRO	2271	100%	3	98	$0.00	$0.00	0.00	
RESTROOM	Private RR	2L100IN	2250	10%	1	200	N2L2T8-SP-2'WL	2250	10%	1	32	$147.88	$147.88	0.02	
PRINCIPAL OFFICE	Private RR	4L4T8-LP	2250	10%	4	98	2L4T8-SP-24RFL-OS	1575	8%	4	54	$57.23	$228.91	0.02	
PRINCIPAL OFFICE	Private RR	NOTHING	2250	10%	1	0	WSIR	2250	10%	1	0	$79.32	$79.32	0.00	
FILE ROOM	Common Admin	1L8T8-SP	2271	100%	1	70	1L8T8-SP-NR-OS	1590	75%	1	70	$0.00	$0.00	0.02	
FILE ROOM	Common Admin	NOTHING	2271	100%	1	0	WSIR	2271	100%	1	0	$79.32	$79.32	0.00	
CONFERENCE ROOM	Conference	4L4T8-LP	2271	40%	4	98	4L4T8-LP-NR-OS	2271	30%	4	98	$0.00	$0.00	0.04	
CONFERENCE ROOM	Conference	NOTHING	2271	40%	1	0	WSIR	2271	40%	1	0	$79.32	$79.32	0.00	
WORK ROOM	Common Admin	4L4T8-LP	2271	100%	6	98	2L4T8-SP-24RFL-OS	1590	75%	6	54	$57.23	$343.36	0.35	
WORK ROOM	Common Admin	NOTHING	2271	100%	1	0	WCDT	2271	100%	1	0	$256.93	$256.93	0.00	
ART ROOM	Class	4L4T8-LP	2455	100%	12	98	NO RETRO	1864	100%	12	98	$0.00	$0.00	0.00	
ART ROOM	Class	NOTHING	2455	100%	1	0	WCDT	2455	100%	1	0	$256.93	$256.93	0.00	
CLASS INTERMEDIATE	Class	4L4T8-LP	2455	100%	12	98	2L4T8-SP-24RFL-OS	1719	75%	12	54	$57.23	$686.72	0.69	1
CLASS INTERMEDIATE	Class	NOTHING	2455	100%	1	0	WCDT	2455	100%	1	0	$256.93	$256.93	0.00	
CLASS INTERMEDIATE	Class	4L4T8-LP	2455	100%	12	98	2L4T8-SP-24RFL-OS	1719	75%	12	54	$57.23	$686.72	0.69	1
CLASS INTERMEDIATE	Class	NOTHING	2455	100%	1	0	WCDT	2455	100%	1	0	$256.93	$256.93	0.00	
CLASS 5TH	Class	4L4T8-LP	2455	100%	12	98	2L4T8-SP-24RFL-OS	1719	75%	12	54	$57.23	$686.72	0.69	1
CLASS 5TH	Class	NOTHING	2455	100%	1	0	WCDT	2455	100%	1	0	$256.93	$256.93	0.00	
MEDIA CENTER	Library	4L4T8-LP	2000	90%	10	98	4L4T8-LP-NR-OS	1400	68%	10	98	$0.00	$0.00	0.22	
MEDIA CENTER	Library	2L4T8-SP	2000	90%	2	58	2L4T8-LP-NR-OS	1400	68%	2	51	$0.00	$0.00	0.04	
MEDIA CENTER	Library	NOTHING	2000	90%	1	0	WCDT	2000	90%	1	0	$256.93	$256.93	0.00	
OFFICE / WORK ROOM	Offices, Private	4L4T8-LP	2271	50%	3	98	2L4T8-SP-24RFL	1590	50%	3	54	$57.23	$171.68	0.07	-
COMPUTER LAB	Class	4L4T8-LP	2455	100%	8	98	2L4T8-SP-24RFL-OS	1719	75%	8	54	$57.23	$457.81	0.46	1
COMPUTER LAB	Class	NOTHING	2455	100%	2	0	CIR	2455	100%	2	0	$256.93	$513.87	0.00	
RESOURCE OFFICE	Offices, Private	4L4T8-LP	2271	50%	1	98	2L4T8-SP-24RFL-OS	1590	38%	1	54	$57.23	$57.23	0.03	
RESOURCE OFFICE	Offices, Private	NOTHING	2271	50%	1	0	WSIR	2271	50%	1	0	$79.32	$79.32	0.00	
RESOURCE SUPPLY	Supply	4L4T8-LP	2271	40%	1	98	2L4T8-SP-24RFL-OS	1590	30%	1	54	$57.23	$57.23	0.02	
RESOURCE SUPPLY	Supply	NOTHING	2271	40%	1	0	WSIR	2271	40%	1	0	$79.32	$79.32	0.00	
RESOURCE CLASS	Class	4L4T8-LP	2455	100%	1	98	2L4T8-SP-24RFL-OS	1719	75%	1	54	$57.23	$57.23	0.06	
RESOURCE CLASS	Class	NOTHING	2455	100%	1	0	WSIR	2455	100%	1	0	$79.32	$79.32	0.00	
CUSTODIAL OFFICE	Offices, Private	1L8T8-SP	2271	50%	1	70	1L8T8-SP-NR-OS	1590	38%	1	70	$0.00	$0.00	0.01	
CUSTODIAL OFFICE	Offices, Private	NOTHING	2271	50%	1	0	WSIR	2271	50%	1	0	$79.32	$79.32	0.00	
CLASS PRIMARY	Class	4L4T8-LP	2455	100%	12	98	2L4T8-SP-24RFL-OS	1719	75%	12	54	$57.23	$686.72	0.69	1
CLASS PRIMARY	Class	NOTHING	2455	100%	1	0	WCDT	2455	100%	1	0	$256.93	$256.93	0.00	
CLASS PRIMARY	Class	4L4T8-LP	2455	100%	12	98	2L4T8-SP-24RFL-OS	1719	75%	12	54	$57.23	$686.72	0.69	1
CLASS PRIMARY	Class	NOTHING	2455	100%	1	0	WCDT	2455	100%	1	0	$256.93	$256.93	0.00	
CLASS PRIMARY	Class	4L4T8-LP	2455	100%	12	98	2L4T8-SP-24RFL-OS	1719	75%	12	54	$57.23	$686.72	0.69	1
CLASS PRIMARY	Class	NOTHING	2455	100%	1	0	WCDT	2455	100%	1	0	$256.93	$256.93	0.00	
BOYS RESTROOM	Halls Middle & Elem	2L4T8-LP	3646	100%	2	51	REMOVE	3646	100%	2	0	$18.56	$37.12	0.10	
BOYS RESTROOM	Halls Middle & Elem	NOTHING	3646	100%	1	0	N2L4T8-SP-8'WR	3646	100%	1	54	$161.94	$161.94	-0.05	-
GIRLS RESTROOM	Halls Middle & Elem	2L4T8-LP	3646	100%	1	51	REMOVE	3646	100%	1	0	$18.56	$18.56	0.05	
GIRLS RESTROOM	Halls Middle & Elem	NOTHING	3646	100%	1	0	N1L4T8-HP-4'WR	3646	100%	1	38	$121.87	$121.87	-0.04	-
KINDERGARTEN 109	Class	4L4T8-LP	2455	100%	14	98	2L4T8-SP-24RFL-OS	1719	75%	14	54	$57.23	$801.17	0.81	2
KINDERGARTEN 109	Class	NOTHING	2455	100%	1	0	WCDT	2455	100%	1	0	$256.93	$256.93	0.00	
RRS	Private RR	2L100IN	2250	10%	2	200	N2L2T8-SP-2'WL	2250	10%	2	32	$147.88	$295.75	0.03	
CUSTODIAL	Custodial	1L4T8-SP	2250	30%	1	32	NO RETRO	2250	30%	1	32	$0.00	$0.00	0.00	
MULTI PURPOSE ROOM	Halls Middle & Elem	1L400HID	2523	100%	11	458	N6L4T8-HP-LNS-WG-OS	1766	75%	11	222	$438.15	$4,819.60	3.21	8
MULTI PURPOSE ROOM	Halls Middle & Elem	2L8T8-SP	2523	100%	6	110	REMOVE	2523	100%	6	0	$19.79	$118.76	0.66	1
MULTI PURPOSE ROOM	Halls Middle & Elem	NOTHING	2523	100%	2	0	WCIR	2523	100%	2	0	$256.93	$513.87	0.00	
KITCHEN	Kitchen	2L4T8-LP	800	100%	10	51	NO RETRO	800	100%	10	51	$0.00	$0.00	0.00	
TABLE STORAGE	Storage	2L8T8-SP	2250	20%	2	110	2L8T8-SP-NR-OS	1590	15%	2	110	$0.00	$0.00	0.01	
TABLE STORAGE	Storage	NOTHING	2250	20%	1	0	WSIR	2250	20%	1	0	$79.32	$79.32	0.00	
MECH / MAINT	Mechanical	2L8T8-SP	2250	10%	2	110	2L8T8-SP-NR-OS	1590	8%	2	110	$0.00	$0.00	0.01	
MECH / MAINT	Mechanical	NOTHING	2250	10%	1	0	WSIR	2250	10%	1	0	$79.32	$79.32	0.00	
GYM STORAGE	Storage	2L8T8-SP	2250	20%	2	110	2L8T8-SP-NR-OS	1590	15%	2	110	$0.00	$0.00	0.01	
GYM STORAGE	Storage	NOTHING	2250	20%	1	0	WSIR	2250	20%	1	0	$79.32	$79.32	0.00	
STAGE / MUSIC CLASS	Class	4L4T8-LP	2455	100%	13	98	2L4T8-SP-24RFL-OS	1719	75%	13	54	$57.23	$743.95	0.75	1
STAGE / MUSIC CLASS	Class	NOTHING	2455	100%	1	0	WCIR	2455	100%	1	0	$256.93	$256.93	0.00	
STAGE CORRIDOR	Halls Middle & Elem	4L4T8-SP	3646	100%	3	112	2L4T8-SP-24RFL	3646	100%	3	54	$57.23	$171.68	0.17	
BOYS RESTROOM	Halls Middle & Elem	2L4T8-LP	3646	100%	2	51	REMOVE	3646	100%	2	0	$18.56	$37.12	0.10	
BOYS RESTROOM	Halls Middle & Elem	NOTHING	3646	100%	1	0	N2L4T8-SP-8'WR	3646	100%	1	54	$161.94	$161.94	-0.05	-
GIRLS RESTROOM	Halls Middle & Elem	2L4T8-LP	3646	100%	1	51	REMOVE	3646	100%	1	0	$18.56	$18.56	0.05	
GIRLS RESTROOM	Halls Middle & Elem	NOTHING	3646	100%	1	0	N1L4T8-HP-4'WR	3646	100%	1	38	$121.87	$121.87	-0.04	-
CENTER HALLS	Halls Middle & Elem	4L4T8-LP	3646	100%	26	98	2L4T8-SP-24RFL	3646	100%	26	54	$57.23	$1,487.89	1.14	4
CENTER HALLS	EM/Night	LED EXIT	8766	100%	7	3	NO RETRO	8766	100%	7	3	$0.00	$0.00	0.00	
TOTALS					**268**					**268**			**$19,635.58**	**12.58**	**30**

* Based on ANSI wattages - to be verified by contractor
** Based on manufacturer's wattages - to be verified by contractor

BUILDING: Indian Peaks Charter School
LIGHTING CONTRACTOR: Contractor Name
ELECTRIC CONSUMPTION RATE: $0.08700 per kWh
ELECTRIC DEMAND RATE: $0.00 per kW
HEATING FUEL RATE: $10.090 per MMBtu

ECM 5.1: Lighting system upgrades

		EXISTING					PROPOSED								
AREA	USAGE TYPE	EXISTING FIXTURE DESCRIPTION	ANNUAL HOURS	Demand Div Factor	QTY	WATTS EACH*	RETROFIT DESCRIPTION	ANNUAL HOURS	Demand Div Factor	QTY	WATTS EACH**	UNIT PRICE	TOTAL EXTENDED PRICE	TOTAL KW SAVED	I S/ PI
LUNCH ROOM	Kitchen	2L4T8-SP-24RFL	1600	100%	12	112	2L4T8-SP-24RFL	1600	100%	12	54	$56.31	$675.76	0.70	1
LUNCH ROOM	EM/Night	NO RETRO	8766	100%	2	3	NO RETRO	8766	100%	2	3	$0.00	$0.00	0.00	
KITCHEN	Kitchen	NO RETRO	1600	100%	6	112	NO RETRO	1600	100%	6	112	$0.00	$0.00	0.00	
MAIN OFFICE	Common Admin	NO RETRO	1600	100%	2	112	NO RETRO	1600	100%	2	112	$0.00	$0.00	0.00	
CONFERENCE ROOM	Conference	NO RETRO	1600	40%	1	112	NO RETRO	1600	40%	1	112	$0.00	$0.00	0.00	
SICK ROOM	Offices, Private	NO RETRO	1600	50%	1	112	NO RETRO	1600	50%	1	112	$0.00	$0.00	0.00	
KINDERGARTEN	Class	2L4T8-SP-24RFL	1600	100%	11	112	2L4T8-SP-24RFL	1600	100%	11	54	$56.31	$619.45	0.64	1
KINDERGARTEN	EM/Night	NO RETRO	8766	100%	1	3	NO RETRO	8766	100%	1	3	$0.00	$0.00	0.00	
1ST & 2ND GRADE	Class	2L4T8-SP-24RFL	1600	100%	12	112	2L4T8-SP-24RFL	1600	100%	12	54	$56.31	$675.76	0.70	1
1ST & 2ND GRADE	EM/Night	NO RETRO	8766	100%	1	3	NO RETRO	8766	100%	1	3	$0.00	$0.00	0.00	
RESTROOMS	Halls Middle & Elem	2L4T8-SP-24RFL	1600	100%	4	112	2L4T8-SP-24RFL	1600	100%	4	54	$56.31	$225.25	0.23	
FOREIGN LANGUAGE	Class	2L4T8-SP-24RFL	1600	100%	6	112	2L4T8-SP-24RFL	1600	100%	6	54	$56.31	$337.88	0.35	
HALLS	Halls Middle & Elem	2L4T8-SP-24RFL	1600	100%	5	112	2L4T8-SP-24RFL	1600	100%	5	54	$56.31	$281.57	0.29	
HALLS	EM/Night	NO RETRO	8766	100%	2	3	NO RETRO	8766	100%	2	3	$0.00	$0.00	0.00	
LIBRARY (WEST MOD)	Class	2L4T8-SP-24RFL	1600	100%	5	144	2L4T8-SP-24RFL	1600	100%	5	54	$56.31	$281.57	0.45	
LIBRARY	EM/Night	NO RETRO	8766	100%	1	3	NO RETRO	8766	100%	1	3	$0.00	$0.00	0.00	
3RD & 4TH GRADE	Class	2L4T8-SP-24RFL	1600	100%	6	144	2L4T8-SP-24RFL	1600	100%	6	54	$56.31	$337.88	0.54	
SPECIAL ED	Class	2L4T8-SP-24RFL	1600	100%	2	144	2L4T8-SP-24RFL	1600	100%	2	54	$56.31	$112.63	0.18	
GIRLS RESTROOM	Halls Middle & Elem	2L4T8-SP-24RFL	1600	100%	1	144	2L4T8-SP-24RFL	1600	100%	1	54	$56.31	$56.31	0.09	
BOYS RESTROOM	Halls Middle & Elem	NO RETRO	1600	100%	1	58	NO RETRO	1600	100%	1	58	$0.00	$0.00	0.00	
CORRIDOR	Halls Middle & Elem	2L4T8-SP-24RFL	1600	100%	2	144	2L4T8-SP-24RFL	1600	100%	2	54	$56.31	$112.63	0.18	
HALL (EAST MOD)	Halls Middle & Elem	NO RETRO	1600	100%	3	58	NO RETRO	1600	100%	3	58	$0.00	$0.00	0.00	
7TH & 8TH GRADE	Class	NO RETRO	1600	100%	8	58	NO RETRO	1600	100%	8	58	$0.00	$0.00	0.00	
FILE ROOM	Storage	NO RETRO	1600	20%	1	58	NO RETRO	1600	20%	1	58	$0.00	$0.00	0.00	
5TH & 6TH GRADE	Class	NO RETRO	1600	100%	12	58	NO RETRO	1600	100%	12	58	$0.00	$0.00	0.00	
5TH & 6TH GRADE	EM/Night	NO RETRO	8766	100%	1	3	NO RETRO	8766	100%	1	3	$0.00	$0.00	0.00	
TOTALS					**109**					**109**			**$3,716.69**	**4.34**	**6**

* Based on ANSI wattages - to be verified by contractor
** Based on manufacturer's wattages - to be verified by contractor

BUILDING: District Office
LIGHTING CONTRACTOR: Contractor Name
ELECTRIC CONSUMPTION RATE: $0.08700 per kWh
ELECTRIC DEMAND RATE: $0.00 per kW
HEATING FUEL RATE: $9.710 per MMBtu

ECM 5.1: Lighting system upgrades

		EXISTING					PROPOSED								
AREA	USAGE TYPE	EXISTING FIXTURE DESCRIPTION	ANNUAL HOURS	Demand Div Factor	QTY	WATTS EACH*	RETROFIT DESCRIPTION	ANNUAL HOURS	Demand Div Factor	QTY	WATTS EACH**	UNIT PRICE	TOTAL EXTENDED PRICE	TOTAL KW SAVED	S/ PI
CONFERENCE ROOM	Conference	4L4T8-LP	2000	40%	6	98	2L4T8-SP-24RFL	2000	40%	6	54	$57.23	$343.36	0.11	
CHAIMBERLIN OFFICE	Offices Admin	4L4T8-LP	2000	90%	2	98	NO RETRO	2000	90%	2	98	$0.00	$0.00	0.00	
LUND OFFICE	Offices Admin	4L4T8-LP	2000	90%	1	98	NO RETRO	2000	90%	1	98	$0.00	$0.00	0.00	
WENINGER OFFICE	Offices Admin	4L4T8-LP	2000	90%	2	98	NO RETRO	2000	90%	2	98	$0.00	$0.00	0.00	
OFFICE	Offices Admin	4L4T8-LP	2000	90%	2	98	NO RETRO	2000	90%	2	98	$0.00	$0.00	0.00	
BREAK ROOM	Offices Admin	4L4T8-LP	2000	90%	4	98	2L4T8-SP-24RFL	2000	90%	4	54	$57.23	$228.91	0.16	
SCHMIEDBAUER OFFICE	Offices Admin	4L4T8-LP	2000	90%	4	98	2L4T8-SP-24RFL	2000	90%	4	54	$57.23	$228.91	0.16	
KNOX OFFICE	Offices Admin	4L4T8-LP	2000	90%	2	98	NO RETRO	2000	90%	2	98	$0.00	$0.00	0.00	
WORK ROOM	Offices Admin	4L4T8-LP	2000	90%	2	98	NO RETRO	2000	90%	2	98	$0.00	$0.00	0.00	
SUPERINTENDANT OFFICE	Offices Admin	4L4T8-LP	2000	90%	4	98	2L4T8-SP-24RFL	2000	90%	4	54	$57.23	$228.91	0.16	
CUSTODIAL	Custodial	1L100IN	2000	30%	1	100	1L25CF	2000	30%	1	25	$14.77	$14.77	0.02	
COMMON AREA	Offices Admin	4L4T8-LP	2000	90%	15	98	2L4T8-SP-24RFL	2000	90%	15	54	$57.23	$858.40	0.59	1
COMMON AREA	Offices Admin	1L15CF-R30	2000	90%	6	15	NO RETRO	2000	90%	6	15	$0.00	$0.00	0.00	
COMMON AREA	EM/Night	LED EXIT	8766	100%	1	3	NO RETRO	8766	100%	1	3	$0.00	$0.00	0.00	
BOARD ROOM	Conference	4L4T8-LP	120	40%	15	98	NO RETRO	120	40%	15	98	$0.00	$0.00	0.00	
CORRIDOR	Conference	4L4T8-LP	760	40%	2	98	2L4T8-SP-24RFL	760	40%	2	54	$57.23	$114.45	0.04	
MENS RESTROOM	Common RR	2L4T8-LP	760	100%	1	51	NO RETRO	760	100%	1	51	$0.00	$0.00	0.00	
MENS RESTROOM	Common RR	2L2T12	760	100%	1	49	2L2T8-LP	760	100%	1	28	$36.24	$36.24	0.02	
WOMENS RESTROOM	Common RR	2L4T8-LP	760	100%	1	51	NO RETRO	760	100%	1	51	$0.00	$0.00	0.00	
WOMENS RESTROOM	Common RR	2L4T8-LP	760	100%	1	51	NO RETRO	760	100%	1	51	$0.00	$0.00	0.00	
FILE STORAGE	Storage	4L4T8-LP	2000	20%	6	98	NO RETRO	2000	20%	6	98	$0.00	$0.00	0.00	
MAINT SHOP	Offices Admin	4L4T8-LP	2200	90%	2	98	NO RETRO	2200	90%	2	98	$0.00	$0.00	0.00	
MAINT OFFICE	Offices Admin	4L4T8-LP	2200	90%	4	98	2L4T8-SP-24RFL-OS	2200	68%	4	54	$57.23	$228.91	0.21	
MAINT OFFICE	Offices Admin	NOTHING	2200	90%	1	0	WSDT	2200	90%	1	0	$114.31	$114.31	0.00	
WAREHOUSE	Warehouse	1L400HID	2200	100%	10	458	N6L4T8-HP-8'IND-OS	1540	75%	10	222	$191.39	$1,913.93	2.92	6
WAREHOUSE	Warehouse	NOTHING	2200	100%	10	0	FIXT MOUNT IR SENSOR	2200	100%	10	0	$137.24	$1,372.38	0.00	
WAREHOUSE	EM/Night	LED EXIT	8766	100%	2	3	NO RETRO	8766	100%	2	3	$0.00	$0.00	0.00	
MEZZANINE STORAGE	Storage	2L8T8-SP	760	20%	4	110	NO RETRO	760	20%	4	110	$0.00	$0.00	0.00	
TOTALS					**112**					**112**			**$5,683.46**	**4.38**	**1**

* Based on ANSI wattages - to be verified by contractor
** Based on manufacturer's wattages - to be verified by contractor

BUILDING: Transportation Facility
LIGHTING CONTRACTOR: Contractor Name
ELECTRIC CONSUMPTION RATE: $0.08700 per kWh
ELECTRIC DEMAND RATE: $0.00 per kW
HEATING FUEL RATE: $8.290 per MMBtu

ECM 5.1: Lighting system upgrades

		EXISTING					PROPOSED								
AREA	USAGE TYPE	EXISTING FIXTURE DESCRIPTION	ANNUAL HOURS	Demand Div Factor	QTY	WATTS EACH*	RETROFIT DESCRIPTION	ANNUAL HOURS	Demand Div Factor	QTY	WATTS EACH**	UNIT PRICE	TOTAL EXTENDED PRICE	TOTAL KW SAVED	K S/ PI
ENTRY VESTIBULE	Halls Middle & Elem	2L42CF	2200	100%	1	84	2L42CF-NR-OS-PC	770	38%	1	84	$0.00	$0.00	0.05	
ENTRY VESTIBULE	Halls Middle & Elem	NOTHING	2200	100%	1	0	WSIR-PC	1100	50%	1	0	$79.32	$79.32	0.00	
DRIVER LOUNGE	Common Admin	2L4T8-SP	2200	100%	4	58	2L4T8-SP-NR-OS	1540	75%	4	58	$0.00	$0.00	0.06	
DRIVER LOUNGE	Common Admin	NOTHING	2200	100%	1	0	CDT	2200	100%	1	0	$256.93	$256.93	0.00	
DRIVER LOUNGE	EM/Night	2L4T8-SP-EM	8766	100%	1	58	NO RETRO	8766	100%	1	58	$0.00	$0.00	0.00	
RRS	Private RR	2L4T8-SP	540	10%	2	58	2L4T8-SP-NR-OS	378	8%	2	58	$0.00	$0.00	0.00	
RRS	Private RR	NOTHING	540	10%	2	0	WSIR	540	10%	2	0	$79.32	$158.65	0.00	
SHOWER	Private RR	1L42CF	540	10%	1	42	NO RETRO	540	10%	1	42	$0.00	$0.00	0.00	
BUS GARAGE	Common Admin	4L4T8-SP	2200	100%	34	112	4L4T8-SP-NR-OS	1540	75%	34	112	$0.00	$0.00	0.95	2
BUS GARAGE	Common Admin	2L4T8-SP	2200	100%	6	58	2L4T8-SP-NR-OS	1540	75%	6	58	$0.00	$0.00	0.09	
BUS GARAGE	EM/Night	4L4T8-SP-EM	8766	100%	2	112	NO RETRO	8766	100%	2	112	$0.00	$0.00	0.00	
BUS GARAGE	EM/Night	2L4T8-SP-EM	8766	100%	6	58	NO RETRO	8766	100%	6	58	$0.00	$0.00	0.00	
BUS GARAGE	Common Admin	NOTHING	2200	100%	6	0	WCIR	2200	100%	6	0	$256.93	$1,541.60	0.00	
BUS GARAGE	EM/Night	LED EXIT	8766	100%	4	3	NO RETRO	8766	100%	4	3	$0.00	$0.00	0.00	
SMALL SERVICE BAY	Common Admin	1L350HID-LR	2200	100%	4	375	N6L4T8-HP-8'IND-OS	1540	75%	4	222	$191.39	$765.57	0.83	1
SMALL SERVICE BAY	Common Admin	NOTHING	2200	100%	2	0	WCDT	2200	100%	2	0	$256.93	$513.87	0.00	
SMALL SERVICE BAY	EM/Night	LED EXIT	8766	100%	1	3	NO RETRO	8766	100%	1	3	$0.00	$0.00	0.00	
BIG SERVICE BAY	Common Admin	1L350HID-LR	2200	100%	9	375	N6L4T8-HP-8'IND-OS	1540	75%	9	222	$191.39	$1,722.53	1.88	4
BIG SERVICE BAY	Common Admin	NOTHING	2200	100%	4	0	WCDT	2200	100%	4	0	$256.93	$1,027.73	0.00	
BIG SERVICE BAY	EM/Night	LED EXIT	8766	100%	1	3	NO RETRO	8766	100%	1	3	$0.00	$0.00	0.00	
SHOP OFFICE	Offices, Private	3L4T8-SP	2200	50%	2	85	3L4T8-SP-NR-OS	1540	38%	2	85	$0.00	$0.00	0.02	
SHOP OFFICE	Offices, Private	NOTHING	2200	50%	1	0	WSDT	2200	50%	1	0	$114.31	$114.31	0.00	
PARTS ROOM	Common Admin	4L4T8-SP	2200	100%	4	112	4L4T8-SP-NR-OS	1540	75%	4	112	$0.00	$0.00	0.11	
PARTS ROOM	Common Admin	NOTHING	2200	100%	1	0	WSDT	1540	100%	1	0	$114.31	$114.31	0.00	
MEZZANINE CLASS	Storage	4L4T8-SP	540	20%	8	112	NO RETRO	540	20%	8	112	$0.00	$0.00	0.00	
WASH BAY	Common Admin	4L4T8-SP	2200	100%	8	112	4L4T8-SP-NR-OS	1540	75%	8	112	$0.00	$0.00	0.22	
WASH BAY	Common Admin	NOTHING	2200	100%	2	0	WET LOC IR	2200	100%	2	0	$270.93	$541.86	0.00	
TOTALS					**118**					**118**			**$6,836.69**	**4.22**	**1(**

* Based on ANSI wattages - to be verified by contractor
** Based on manufacturer's wattages - to be verified by contractor

e) Subcontractor cost proposals

The following subcontractor cost proposals are provided on the following pages:

1. Tolin Mechanical Systems Company cost proposal – ECMs 1.1, 4.1, 4.2, 4.3, 4.4, 4.5, 8.2
2. Honeywell cost proposal - ECMs 3.1, 8.1, 12.1, 14
3. Retro-tech Systems, Inc. cost proposal – ECM 5.1
4. CanAM Building Envelope Specialists – ECM 6.1

Section 2
Proposal Form

The Bidder shall submit his quotation on his company letterhead, following exactly the format shown herein.

Gentlemen:

We the undersigned, acknowledge receipt of the Bid Documents listed in Section 1 of your Request for Quotation RFQ Number _____ dated 5/1/09.
EGSD MECH 101

We also acknowledge receipt of the following addenda and supplements to the Bid Documents and have included the costs associated therewith in our lump sum price. (List documents. If none, write None.)

In strict compliance therewith we submit our Proposal, which includes all applicable taxes.

A. **Base Bid** — **Firm Lump Sum Price**

All labor, materials, tools and equipment necessary to install all ECMs (including bonds) in accordance with the requirements of the Bid Documents. $ 509,220.00

B. **Alternates** (If none, write None.)

C. **Subcontracts**

The proportion of Bidder's work to be performed by lower tier subcontractors is approximately 20 % of the total work. (If none, write None.)

D. **Experience, Ability and Intent**

We assert that we have the full knowledge and experience as well as the necessary available equipment to perform the work as required by the Contract Documents. We will place at the disposal of the work our skills and ability as subcontractor and mechanic. We will provide a sufficient number of skilled workers, under proper supervision with adequate equipment, so that the work will be completed in the most expeditious workmanlike manner.

E. **Base Bid Breakdown**

	Labor	Material	Totals
ECM 8.2 East Grand Middle School	10,288	22,822	33,110
ECM 1.1 Fraser Valley Elementary School	29,844	24,556	54,400
ECM 4.1 Fraser Valley Elementary School	8,674	26,257	34,930
ECM 4.2 Granby Elementary School	17,338	54,385	71,723
ECM 1.1 Grand Lake Elementary School	27,056	57,391	84,447
ECM 4.1 Grand Lake Elementary School	9,620	26,175	35,795
ECM 4.2 District Office	21,749	97,957	119,706
ECM 4.3 District Office	9,863	9,042	18,905
ECM 4.4 District Office	7,749	7,103	14,852
ECM 4.5 District Office	9,038	9,017	18,055
Subtotals	151,219	334,705	485,924

F. **Bonds**

If awarded this work, Bidder agrees to deliver to Honeywell with the executed Subcontract Agreement Performance Bond and Labor and Material Bond as security for the faithful performance of the contract and/or for the payment of all persons performing labor or furnishing materials in connection therewith.

Price for the Performance Bond and Payment Bond:

$ 23,296.00

Name of Surety: LOCKTON

G. **Extra Work**

Our time and material formula which may be used to price change or additions to the work that may be authorized or directed by Honeywell are as follows:

(1) Straight Time $100/hr

(2) Payroll Taxes _____

(3) Overhead % of 1 ____

(4) Profit % of 1 ____

(5) Insurance % of 1 ____

(6) Equipment Rentals _____

(7) Materials – at cost plus % 15

(8) Premium Time $145/hr

H. **Insurance**

If awarded this work, Bidder agrees to furnish prior to start of work at site an Insurance Certificate showing evidence of compliance with the requirements established by the Subcontract Agreement, including the required endorsement on the reverse side of the Certificate, and further agrees that if Bidder subcontracts any of the work, Bidders subcontractor(s) will comply with the insurance requirements and furnish his certificate.

I. **Codes, Standards and Reference Documents**

The work shall be performed in full accordance with the applicable provisions of the following:

IBC, IMC, IPC & all applicable local & state codes.

J. **Time of Completion**

Bidders must indicate below the calendar days required to perform their work. All schedules are subject to negotiation and agreement prior to contract award and all subcontractors will be required to perform their work in accordance with the overall schedule as directed by Honeywell.

Calendar Days After Notice to Proceed: approx 45 days (exact days to be determined)

K. **Labor and Wages**

In accordance with laws of Colorado, C.R.S. § 8-17-101, et. seq., as amended, Colorado labor shall be employed to perform the Work to the extent of not less than eighty percent (80%) of each type or class of labor in the several classifications of skilled and common labor employed on the Project.

L. **Relations of Owner, Contractor and Subcontractor**

In accordance with the State of Colorado contract with Honeywell where Honeywell is the Contractor, the following Section 16 of the Contract Schedule A requires that Honeywell bind each subcontractor to the terms of the Contract between the State of Colorado and Honeywell. This section states:
"The Contractor agrees to bind each Subcontractor to the terms of these General Conditions and to the requirements of the Drawings and Specifications, and any Addenda thereto, and also all the other Contract Documents and Procedural Documents, as applicable to the Work of such Subcontractor. The Contractor further agrees to bind each Subcontractor to those terms of the General Conditions which expressly require that Subcontractors also be bound, including without limitation, requirements that Subcontractors waive all rights of subrogation, provide adequate general commercial liability and property insurance, automobile insurance and workers' compensation insurance as provided in Article 25, Insurance. The Contractor shall be fully responsible to the Principal Representative for the acts and omissions of Subcontractors and of persons either directly or indirectly employed by them. All instructions or orders in respect to Work to be done by Subcontractors shall be given to the Contractor. Nothing contained in the Contract Documents shall be deemed to create any contractual relationship whatsoever between any Subcontractor and the State of Colorado acting by and through its Principal Representative.

An addendum to the POSA will be provided which states this relationship. The draft contract documents between the State of Colorado and Honeywell have been supplied as attachments to this Request for Quote.

M. **Understanding and Certification**

We agree not to alter or withdraw our bid for a one hundred and eighty (180) day period from the day set for receiving the bids.

We understand and agree that Honeywell reserves the right to reject any and all bids and to make an award to other than the low Bidder.

We herein certify that we and all our lower tier subcontractors will comply with all of the safety regulations and working rules while working on this project.

Submitted By:

Scott Yum (Name)	Tolin Mechanical Systems Co. (Company Name)
Project Sales Rep (Title)	12005 East 45th Ave. (Address)
5/22/09 (Date)	Denver, CO 80239 (City, State, Zip)

We are incorporated under the laws of the State of CO.

Our license number is 4223189.

Honeywell

Subcontractor Verification and Pricing Form

Date: 5/22/09

Project Name: East Grand School District Energy Retrofit Project

Contractor Name and Address: Tolin Mechanical Systems Co.
12005 East 45th Ave
Denver, CO 80239

		YES	NO	N/A
	IS SUBCONTRACTOR:			
A	Currently Registered in the Honeywell Web PO System?		✓	
B	Currently Using the Honeywell WebPO System E-Invoicing?		✓	
C	Capable of Design/Build including $5M in E&O Insurance?	✓		
D	Currently Licensed in accordance with State Requirements for the Work to be Performed?	✓		
	THE SUBCONTRACTOR AGREES TO THE FOLLOWING:			
1	Accept Terms and Conditions as set forth in the current standard Honeywell Subcontract Agreement Rev # R (insert Rev)			
2	Accept Entire Scope of Work description dated 5/1/09 (insert date)	✓		
3	Include All Applicable Taxes in the Quoted Firm Price.	✓		
4	Quoted Firm Price includes compliance with all state & local code requirements, mandates from state & local inspectors, and all required Permits & Fees.	✓		
5	Include 100% Payment and 100% Performance Bonds in the Total Quoted Firm Price when Price exceeds $50,000. *NOT APPLICABLE FOR PROFESSIONAL ENGINEERING SERVICES SUBCONTRACT.*	✓		
6	Include Insurance Coverage and Costs as described in the Attached Exhibit A. *ADDITIONALLY, IF PROFESSIONAL ENGINEERING SERVICES SUBCONTRACT, $5M E&O INSURANCE IS REQUIRED.*	✓		
7	Include the Cost of the Services of a Professional Engineer to stamp and seal the drawings including Mechanical, Electrical, Structural, Civil, etc.	✓		
8	Include the Scope and Cost for all Measurement and Verification work and savings described in the M&V Methodology description dated _____ (insert date)	✓		
9	Include all second and third shift and weekend labor costs associated with completing this project within the stated Calendar Days to Complete.		✓	
10	Include "Union" labor for all work on this project claimed by the United Association of Plumbers and Pipe fitters.	✓		
11	Meet all Local Labor Laws and Include Labor Costs to meet Prevailing Wage, Davis-Bacon, etc. as required by local jurisdiction.	✓		

Total Cost of Performance and Payment Bonds from Item 5 above: $ 23,296.00

Total Quoted Price of Project (including Bonds): $ 509,220.00

Total Quoted Price Good Through (insert Date): 8/7/09

Calendar Days to Complete from Notice to Proceed: approx. 45 days

Company Representative Signature: [signature]

Company Representative Name (Printed): Scott Yum

Position in Company (Title): Project Sales Representative

State Contracting License No.: 4223189

Federal Identification Number: 20-1601728

Comments or Exceptions: (Required for all columns marked No or Not Applicable (N/A))

Honeywell

Booking Report

Job Number		Estimate ID	F152941F01	Date	7/13/2009
Job Name	Fire Alarm	Miles from Job	20	Completion Date	12/31/2009
Estimate Type	New	Estimate Status	In Progress		

A.	Conduit Ft/Dev Wired by HW	0.00	F.	Tech Lab as % of Total Trans Cost	11.35%
B.	Eng hours/Total Units	8.40	G.	Elec Hrs/Device Wired by HW	0.00
C.	Engr Lab as % of Tot. Trans Cost	12.64%	H.	Elec Sub /Device Wired by HW	27358.98
D.	Pneu. Hrs/Total Piped Devices	0.00	I.	Tubing Ft/Total Piped Devices	0.00
E.	Tech Hours/Total Devices Wired	8.40	J.	Total Transfer as % of Tot costs	7.46%

	WIRING DATA			DEVICE DATA	
1	Conduit Feet	0.00	10	Piped Devices Supplied by HW	0.00
2	Conduit & Wire Std Hrs	0.00	11	Piped Devices Supplied by OEM	0.00
3	Elec. Device Std Hrs	0.00	12	Devices Wired by HW	5.00
4	Elec. Job Factor	1.00	13	Total Devices Wired	5.00
5	Elec Branch Factor	1.00	14	Total Number of Units	5.00
6	Material Cost	0.00	15	Total DGP Count	0.00
7	Subcontractor Hourly Rate	0.00			
8	Target Cost	136794.92		TUBING DATA	
	ENGR. & TECH SPECS		16	Standard Tubing Hrs	0.00
9A	Engr.Software Std Hrs	21	17	Pneumatic Device Std Hrs	0.00
9B	Sys Spec. Std Hrs	0.00	18	Pneumatic Job Factor	1.00
9C	Total Engr. Std Hrs	42.00	19	Pneumatic Branch Factor	1.00
9D	Total Sys Spec Std Hrs	42.00			

			QUANTITY	X	RATE		
20	Project Supervision		90.04	HRS@	108.10	=	9,732.99
21	Engr Labor		42.00	HRS@	39.00	=	1,638.00
22	Engr. Fringe Benefit		42.00	HRS@	50.70	=	2,129.40
23	Engr. Travel Labor & Expense	11.41%				=	1,297.20
24	Pneu Labor Hours		0.00	HRS@	0.00	=	0.00
25	Pneu Fringe Benefit		0.00	HRS@	0.00	=	0.00
26	Pneu. Travel Labor & Expense	0.00%				=	0.00
27	Tech Labor Hours		42.00	HRS@	35.00	=	1470.00
28	Tech Fringe Benefit		42.00	HRS@	45.50	=	1911.00
29	Tech Travel Labor & Expense	32.86%				=	483.00
30	HW Elec Labor Hours		0.00	HRS@	0.00	=	0.00
31	HW Elec Fringe Benefit		0.00	HRS@	0.00	=	0.00
32	HW Elec Travel Labor & Expense	0.00%				=	0.00
33	Total Labor Fringe & Expense					=	18661.59
34	Elec Sub		136794.92			=	136794.92
35	Elec Subcontract Risk Factor	3.19%				=	4370.51
36	Other Subcontracts		0.00			=	0.00
37	Copper Tubing		0.00	FEET@		=	0.00
38	HW Piping System		0.00	FEET@		=	0.00
39	Plastic Tubing		0.00	HRS@		=	0.00
40	All Installation Material						0.00

41	Total Equipment Transfer Cost	12956.18	X Factor	1		=	12956.18
42	Total Special Factory Quotes					=	0.00
43	Use Tax	2.81%				=	363.52
44	Guarantee Service Costs	4.50%				=	583.03
45	Clean Up, Shack, Util, Tools	0%				=	0.00
46	Tech Literature, Training					=	0.00

CONTRACT PRICE	47	Factory Mounting Charges		=	0.00
218006.96	48	Provision for Contract Backcharges		=	0.00
MINUS	49	Commissions, Performance Bond		=	0.00
173729.75	50	Total Direct Costs		=	173729.75
EQUALS	51 Branch Overhead	0%		=	0.00
44277.21	52	Total Cost		=	173729.75
GROSS MARGIN	53 Bid Price Factor	1.00	Total Profit Rate 0%	=	0.00
20.31%	54 Bid Price	173729.75	Divided By 1.00	=	173729.75
			55 Contract Price	=	218006.96
		56	Margin 44277.21	=	20.31

Honeywell

Booking Report

	Job Number		Estimate ID	F147941F01		Date	7/13/2009
	Job Name	Phase 2 PC	Miles from Job	75		Completion Date	12/31/2009
	Estimate Type	New	Estimate Status	In Progress			
A.	Conduit Ft/Dev Wired by HW		0.00	F.	Tech Lab as % of Total Trans Cost		21.57%
B.	Eng hours/Total Units		0.67	G.	Elec Hrs/Device Wired by HW		0.00
C.	Engr Lab as % of Tot. Trans Cost		25.48%	H.	Elec Sub /Device Wired by HW		245.47
D.	Pneu. Hrs/Total Piped Devices		0.00	I.	Tubing Ft/Total Piped Devices		0.00
E.	Tech Hours/Total Devices Wired		0.67	J.	Total Transfer as % of Tot costs		20.40%
	WIRING DATA			DEVICE DATA			
1	Conduit Feet	0.00	10	Piped Devices Supplied by HW			23.00
2	Conduit & Wire Std Hrs	0.00	11	Piped Devices Supplied by OEM			0.00
3	Elec. Device Std Hrs	0.00	12	Devices Wired by HW			444.00
4	Elec. Job Factor	1.00	13	Total Devices Wired			444.00
5	Elec Branch Factor	1.00	14	Total Number of Units			467.00
6	Material Cost	0.00	15	Total DGP Count			0.00
7	Subcontractor Hourly Rate	0.00					
8	Target Cost	108990.20		TUBING DATA			
	ENGR. & TECH SPECS		16	Standard Tubing Hrs			0.00
9A	Engr.Software Std Hrs	87.58	17	Pneumatic Device Std Hrs			0.00
9B	Sys Spec. Std Hrs	0.00	18	Pneumatic Job Factor			1.00
9C	Total Engr. Std Hrs	314.43	19	Pneumatic Branch Factor			1.00
9D	Total Sys Spec Std Hrs	296.60					

			QUANTITY	X	RATE		
20	Project Supervision		119.73	HRS@	108.10	=	12,943.31
21	Engr Labor		314.43	HRS@	39.00	=	12,262.77
22	Engr. Fringe Benefit		314.43	HRS@	50.70	=	15,941.60
23	Engr. Travel Labor & Expense	3.86%				=	972.90
24	Pneu Labor Hours		0.00	HRS@	0.00	=	0.00
25	Pneu Fringe Benefit		0.00	HRS@	0.00	=	0.00
26	Pneu. Travel Labor & Expense	0.00%				=	0.00
27	Tech Labor Hours		296.60	HRS@	35.00	=	10381.00
28	Tech Fringe Benefit		296.60	HRS@	45.50	=	13495.30
29	Tech Travel Labor & Expense	60.71%				=	6302.00
30	HW Elec Labor Hours		0.00	HRS@	0.00	=	0.00
31	HW Elec Fringe Benefit		0.00	HRS@	0.00	=	0.00
32	HW Elec Travel Labor & Expense	0.00%				=	0.00
33	Total Labor Fringe & Expense					=	72298.88
34	Elec Sub		108990.20			=	108990.20
35	Elec Subcontract Risk Factor	2.75%				=	3000.00
36	Other Subcontracts		0.00			=	0.00
37	Copper Tubing		0.00	FEET@		=	0.00
38	HW Piping System		0.00	FEET@		=	0.00
39	Plastic Tubing		0.00	HRS@		=	0.00
40	All Installation Material						0.00

41	Total Equipment Transfer Cost	48134.35	X Factor	1		=	48134.35
42	Total Special Factory Quotes					=	0.00
43	Use Tax	2.81%				=	1350.52
44	Guarantee Service Costs	4.50%				=	2166.05
45	Clean Up, Shack, Util, Tools	0%				=	0.00
46	Tech Literature, Training					=	0.00
CONTRACT PRICE	47	Factory Mounting Charges				=	0.00
296072.27	48	Provision for Contract Backcharges				=	0.00
MINUS	49	Commissions, Performance Bond				=	0.00
235939.99	50	Total Direct Costs				=	235939.99
EQUALS	51 Branch Overhead	0%				=	0.00
60132.27	52	Total Cost				=	235939.99
GROSS MARGIN	53 Bid Price Factor	1.00	Total Profit Rate	0%		=	0.00
20.31%	54 Bid Price	235939.99	Divided By	1.00		=	235939.99
			55	Contract Price		=	296072.27
		56	Margin		60132.27	=	20.31

Honeywell

Booking Report

	Job Number		Estimate ID	F152941F02		Date	7/13/2009
	Job Name	VFD Installation	Miles from Job	20		Completion Date	12/31/2009
	Estimate Type	New	Estimate Status	In Progress			
A.	Conduit Ft/Dev Wired by HW		0.00	F.	Tech Lab as % of Total Trans Cost		4.91%
B.	Eng hours/Total Units		0.97	G.	Elec Hrs/Device Wired by HW		0.00
C.	Engr Lab as % of Tot. Trans Cost		2.05%	H.	Elec Sub /Device Wired by HW		1993.06
D.	Pneu. Hrs/Total Piped Devices		0.00	I.	Tubing Ft/Total Piped Devices		0.00
E.	Tech Hours/Total Devices Wired		2.58	J.	Total Transfer as % of Tot costs		38.72%
	WIRING DATA			DEVICE DATA			
1	Conduit Feet	0.00	10	Piped Devices Supplied by HW			0.00
2	Conduit & Wire Std Hrs	0.00	11	Piped Devices Supplied by OEM			0.00
3	Elec. Device Std Hrs	0.00	12	Devices Wired by HW			6.00
4	Elec. Job Factor	1.00	13	Total Devices Wired			6.00
5	Elec Branch Factor	1.00	14	Total Number of Units			6.00
6	Material Cost	0.00	15	Total DGP Count			0.00
7	Subcontractor Hourly Rate	0.00					
8	Target Cost	11958.36		TUBING DATA			
	ENGR. & TECH SPECS		16	Standard Tubing Hrs			0.00
9A	Engr.Software Std Hrs	1.5	17	Pneumatic Device Std Hrs			8.00
9B	Sys Spec. Std Hrs	0.00	18	Pneumatic Job Factor			1.00
9C	Total Engr. Std Hrs	5.80	19	Pneumatic Branch Factor			1.00
9D	Total Sys Spec Std Hrs	15.50					

		QUANTITY	X	RATE				
20	Project Supervision	14.70	HRS@	108.10	=	1,589.43		
21	Engr Labor	5.80	HRS@	39.00	=	226.20		
22	Engr. Fringe Benefit	5.80	HRS@	50.70	=	294.06		
23	Engr. Travel Labor & Expense	11.91%			=	216.20		
24	Pneu Labor Hours	8.00	HRS@	30.42	=	243.37		
25	Pneu Fringe Benefit	8.00	HRS@	39.55	=	316.39		
26	Pneu. Travel Labor & Expense	28.75%			=	69.97		
27	Tech Labor Hours	15.50	HRS@	35.00	=	542.50		
28	Tech Fringe Benefit	15.50	HRS@	45.50	=	705.25		
29	Tech Travel Labor & Expense	29.68%			=	161.00		
30	HW Elec Labor Hours	0.00	HRS@	0.00	=	0.00		
31	HW Elec Fringe Benefit	0.00	HRS@	0.00	=	0.00		
32	HW Elec Travel Labor & Expense	0.00%			=	0.00		
33	Total Labor Fringe & Expense				=	4364.37		
34	Elec Sub	11958.36			=	11958.36		
35	Elec Subcontract Risk Factor	2.95%			=	352.20		
36	Other Subcontracts	0.00			=	0.00		
37	Copper Tubing	0.00	FEET@		=	0.00		
38	HW Piping System	0.00	FEET@		=	0.00		
39	Plastic Tubing	0.00	HRS@		=	0.00		
40	All Installation Material					0.00		
41	Total Equipment Transfer Cost	11045.18	X Factor	1	=	11045.18		
42	Total Special Factory Quotes				=	0.00		
43	Use Tax	2.81%			=	309.90		
44	Guarantee Service Costs	4.50%			=	497.03		
45	Clean Up, Shack, Util, Tools	0%			=	0.00		
46	Tech Literature, Training				=	0.00		
CONTRACT PRICE	47	Factory Mounting Charges			=	0.00		
35797.52	48	Provision for Contract Backcharges			=	0.00		
MINUS	49	Commissions, Performance Bond			=	0.00		
28527.05	50	Total Direct Costs			=	28527.05		
EQUALS	51 Branch Overhead	0%			=	0.00		
7270.48	52	Total Cost			=	28527.05		
GROSS MARGIN	53 Bid Price Factor	1.00	Total Profit Rate	0%	=	0.00		
20.31%	54 Bid Price	28527.05	Divided By	1.00	=	28527.05		
			55	Contract Price	=	35797.52		
		56	Margin	7270.48	=	20.31		

Honeywell

Booking Report

	Job Number		Estimate ID	F152941F03		Date	7/13/2009
	Job Name	Add UPS	Miles from Job	20		Completion Date	12/31/2009
	Estimate Type	New	Estimate Status	In Progress			
A.	Conduit Ft/Dev Wired by HW		0.00	F.	Tech Lab as % of Total Trans Cost		9.69%
B.	Eng hours/Total Units		1.60	G.	Elec Hrs/Device Wired by HW		0.00
C.	Engr Lab as % of Tot. Trans Cost		7.85%	H.	Elec Sub /Device Wired by HW		1084.81
D.	Pneu. Hrs/Total Piped Devices		0.00	I.	Tubing Ft/Total Piped Devices		0.00
E.	Tech Hours/Total Devices Wired		2.20	J.	Total Transfer as % of Tot costs		31.52%
	WIRING DATA			DEVICE DATA			
1	Conduit Feet	0.00	10	Piped Devices Supplied by HW			0.00
2	Conduit & Wire Std Hrs	0.00	11	Piped Devices Supplied by OEM			0.00
3	Elec. Device Std Hrs	0.00	12	Devices Wired by HW			2.00
4	Elec. Job Factor	1.00	13	Total Devices Wired			2.00
5	Elec Branch Factor	1.00	14	Total Number of Units			2.00
6	Material Cost	0.00	15	Total DGP Count			0.00
7	Subcontractor Hourly Rate	0.00					
8	Target Cost	2169.62		TUBING DATA			
	ENGR. & TECH SPECS		16	Standard Tubing Hrs			0.00
9A	Engr.Software Std Hrs	2	17	Pneumatic Device Std Hrs			0.00
9B	Sys Spec. Std Hrs	0.00	18	Pneumatic Job Factor			1.00
9C	Total Engr. Std Hrs	3.20	19	Pneumatic Branch Factor			1.00
9D	Total Sys Spec Std Hrs	4.40					

		QUANTITY	X	RATE		
20	Project Supervision	2.54	HRS@	108.10	=	274.83
21	Engr Labor	3.20	HRS@	39.00	=	124.80
22	Engr. Fringe Benefit	3.20	HRS@	50.70	=	162.24
23	Engr. Travel Labor & Expense 27.05%				=	108.10
24	Pneu Labor Hours	0.00	HRS@	0.00	=	0.00
25	Pneu Fringe Benefit	0.00	HRS@	0.00	=	0.00
26	Pneu. Travel Labor & Expense 0.00%				=	0.00
27	Tech Labor Hours	4.40	HRS@	35.00	=	154.00
28	Tech Fringe Benefit	4.40	HRS@	45.50	=	200.20
29	Tech Travel Labor & Expense 52.27%				=	80.50
30	HW Elec Labor Hours	0.00	HRS@	0.00	=	0.00
31	HW Elec Fringe Benefit	0.00	HRS@	0.00	=	0.00
32	HW Elec Travel Labor & Expense 0.00%				=	0.00
33	Total Labor Fringe & Expense				=	1104.67
34	Elec Sub	2169.62			=	2169.62
35	Elec Subcontract Risk Factor 2.95%				=	63.90
36	Other Subcontracts	0.00			=	0.00
37	Copper Tubing	0.00	FEET@		=	0.00
38	HW Piping System	0.00	FEET@		=	0.00
39	Plastic Tubing	0.00	HRS@		=	0.00
40	All Installation Material					0.00

41	Total Equipment Transfer Cost	1589.68	X Factor	1		=	1589.68
42	Total Special Factory Quotes					=	0.00
43	Use Tax 2.81%					=	44.60
44	Guarantee Service Costs 4.50%					=	71.54
45	Clean Up, Shack, Util, Tools 0%					=	0.00
46	Tech Literature, Training					=	0.00
CONTRACT PRICE	47 Factory Mounting Charges					=	0.00
6329.54	48 Provision for Contract Backcharges					=	0.00
MINUS	49 Commissions, Performance Bond					=	0.00
5044.01	50 Total Direct Costs					=	5044.01
EQUALS	51 Branch Overhead 0%					=	0.00
1285.53	52 Total Cost					=	5044.01
GROSS MARGIN	53 Bid Price Factor 1.00	Total Profit Rate		0%		=	0.00
20.31%	54 Bid Price 5044.01	Divided By		1.00		=	5044.01
			55	Contract Price		=	6329.54
	56	Margin			1285.53	=	20.31

HONEYWELL INTERNATIONAL INC.

REQUEST FOR QUOTATION NUMBER: EGSD LI 101

DATE: May 11, 2009

FOR
East Grand School District Energy Retrofit Project

Section 1
Request for Quotation and Instructions to Bidders

1. Request

(a) A firm bid is requested for the work required as described in the accompanying documents.

(b) The **Proposal Form** (bid) shall be submitted electronically or by FAX no later than 4:00 PM, PST, on May 22, 2009 to the following two electronic addresses:

Matthew.Benoit@honeywell.com	FAX 720-293-4527
Carol.Thompson@honeywell.com	FAX 206-238-6883

Signed copies of the **Proposal Form, the Subcontractor Verification and Pricing Form**, and any supporting documentation shall be sent in a sealed envelope on the same day. The envelope shall be plainly marked on the outside "Bid for East Grand SD - Energy Performance Contract" and addressed to:

Carol Thompson
Honeywell Building Solutions
21212 4th Ave S
Des Moines, WA 98198

(c) Bids received electronically after the stated time and date will not be accepted. Paper copies of the bid should arrive no later than May 28, 2009.

(d) In the event that you wish to decline to bid, please return all bid documents to Carol Thompson indicated in Paragraph 1 (b) above.

(e) Price shall reflect the dates in the attached **Preliminary Project Schedule**. Contract will not be awarded until approximately Aug 6, 2009.

2. Bid Preparation

(a) Your sealed bid must be written on your company letterhead following exactly the format shown in the accompanying "**Proposal Form**".

(b) **The Proposal Form** shall be completely filled out and submitted in original in accordance with the requirements outlined in the documents.

(c) The quotation shall be regarded as having been made with full knowledge of conditions and requirements. Each Bidder shall be presumed to have visited the premises prior to the time of submitting the quotation for the work herein described and to have observed and given consideration to the conditions under which his work will be executed. Bidders shall thoroughly examine and be familiar with the Bid Documents and the failure or omission of any Bidder to examine any form, instrument, addendum or other document sent to and received by him during the bid period, and to visit the site, shall in no way relieve the Bidder from any obligation with respect to his quotation or to the subcontract. The submission of a quotation shall constitute evidence of compliance with this section.

(d) Quotations must be executed in the exact legal title or name of the Bidder, and the Bidder's business address and telephone number shall be given. In addition:

- If the quotation is made under an assumed or fictitious trade name, there shall be stated the names and respective resident addresses of all parties interested.
- If the Bidder is a partnership, the names and resident addresses of all parties interested.
- If the Bidder is a corporation, the state of incorporation shall be given.

(e) All applicable taxes shall be included in the bid price.

(f) The attached **Subcontractor Verification and Pricing Form** shall be completely filled out, signed and submitted in original in accordance with the requirements outlined in these documents.

3. Bid Documents

The following items are enclosed with this request for quotation or will be provided later as noted and comprise the sum total of the Bid Documents for this project:

X Request for Quotation and Instructions to Bidders (Section 1 this document)
X Proposal Form (Section 2 this document)
X Subcontractor Verification and Pricing Form (Rev 081109)
X Purchase Order Subcontract Agreement (POSA) template (Rev R dated 3-24-09)
X Attachment A Scope of Work
X Attachment A-1 Supplemental Scope of Work
X Attachment B Supplemental Conditions & Special Provisions
X Attachment C Project Schedule
X Attachment D Measurement & Verification
X Contract between State of Colorado and Honeywell – Draft
X Contract Schedule A between State of Colorado and Honeywell - Draft

4. Codes, Standards and Reference Documents

The work shall be performed in full accordance with the applicable provisions of the following:

1) Appropriate regulatory agencies and codes.
2) Local building departments and governing authorities.
3) Encroachment permits

5. Contract Documents

The Bidder's attention is directed to Section 1 of the Subcontract Agreement for a description and listing of the Contract Documents.

6. Contract Documents to be Executed by the Successful Bidder

(a) Immediately after notice of award, the successful Bidder shall execute a Subcontract Agreement with Honeywell on the form included with this request for quotation.

(b) Honeywell will require the successful Bidder to furnish bonds covering the faithful performance of the Subcontract and the payment of all obligations arising thereunder in such form and amount as Honeywell may prescribe and with such sureties as may be acceptable to Honeywell. The cost of premiums shall be borne by the subcontractor.

7. Interpretations

(a) If a Bidder is in doubt as to the meaning of any section or part of the Bid Documents, he shall contact one of the individuals listed in Paragraph 1(b) above.

(b) If a Bidder's question results in interpretations, deletions or additions to the Bid Documents, an Addendum will be issued and e-mailed to all Bidders. A follow-up telephone call will be made to each Bidder as well.

8. Site Visits

Bidders are expected to visit the schools for the walk through at the assigned time. The assigned time is **May 14, 2009, 8AM to 5PM.** All site visits including the walk through must be prearranged through the Honeywell individual listed below. If you do not need a site visit or can't attend at the scheduled time, please let the contact person listed below know your plans.

Please contact Matthew Benoit at Matthew.Benoit@honeywell.com or at 303-274-0337 for additional details.

9. General

(a) The instructions to Bidders contained in this document do not supplant or supersede the balance of the Bid Documents listed in Paragraph 3 above. These instructions are included only to assist the Bidder in the preparation of his bid.

(b) Time is important and the successful Bidder shall have equipment on the job site and commence work in accordance with the Project Schedule.

(c) It is the Bidder's responsibility to provide all labor, materials, equipment and other facilities required to complete the work. The Bidder shall be fully responsible for the checkout and verification of their own work. In the event any deficiencies or defects are discovered after the work is turned over to Honeywell, then such deficiencies and/or defects shall be expeditiously corrected at the Bidder's expense.

(d) The Bidder shall submit with his bid preliminary schedule information. **The preliminary schedule should be marked-up to show actual estimated spans for each activity.** The final project schedule will reflect the spans provided with the bids.

(e) Upon notification of award, the subcontractor shall cooperate with Honeywell in the preparation of a progress schedule. Subcontractor's representatives who have knowledge of the availability of personnel, materials, and equipment and are authorized to speak for the Subcontractor shall attend a meeting with the Honeywell Project Manager at a place designated by Honeywell. The meeting will last one day. Generally, the subcontractor's representatives will be asked to decide sequence of operations and estimate elapsed times for each work item, so that a progress schedule can be prepared by the Honeywell Project Manager. The schedule will be that of the Subcontractor. The Honeywell Project Manager's function is to provide the expertise to put the Subcontractor's scheduling information into a particular form designed to keep both Customer/Owner and Subcontractor informed of anticipated and actual job progress. In order to achieve this purpose, the Subcontractor's representatives and the Honeywell Project Manager shall meet periodically during the job to update the schedule.

(f) The information contained in this RFQ is proprietary information (as defined herein) obtained by Bidder from Honeywell in connection with this Agreement shall remain the property of Honeywell, and Bidder shall not divulge such information to any third party without prior written consent of Honeywell. As used herein, the term "proprietary information" shall mean written information (or oral information reduced to writing), or information in machine-readable form supplied to Bidder hereunder which Honeywell deems proprietary or confidential and characterizes as proprietary at the time of disclosure to Bidder by marking or labeling the same "Proprietary, "Confidential", or "Sensitive". The Bidder shall incur no obligations hereunder with respect to proprietary information which: (a) was in the Bidder's possession or was known to the Bidder prior to its receipt from Honeywell; (b) is independently developed by the Bidder without the utilization of such confidential information of Honeywell; (c) is or becomes public knowledge through no fault of the Bidder; (d) is or becomes available to the Bidder from a source other than Honeywell; (e) is or becomes available on an unrestricted basis to a third party from Honeywell or from someone acting under its control; or (f) is received by Bidder after notification to Honeywell that the Bidder will not accept any further information.

Section 2
Proposal Form

The Bidder shall submit his quotation on his company letterhead, following exactly the format shown herein.

Gentlemen:

We the undersigned, acknowledge receipt of the Bid Documents listed in Section 1 of your Request for Quotation RFQ Number EGSDLI 101 dated 5-11-09.

We also acknowledge receipt of the following addenda and supplements to the Bid Documents and have included the costs associated therewith in our lump sum price. Addenda 1, 2, 3, 4

(List documents. If none, write None.)

In strict compliance therewith we submit our Proposal, which includes all applicable taxes.

A. **Base Bid** — **Firm Lump Sum Price**

All labor, materials, tools and equipment necessary to install all ECMs (including bonds) in accordance with the requirements of the Bid Documents. $ 230,411.39

B. **Alternates** (If none, write None.)

C. **Subcontracts**

The proportion of Bidder's work to be performed by lower tier subcontractors is approximately 0 % of the total work. (If none, write None.)

D. **Experience, Ability and Intent**

We assert that we have the full knowledge and experience as well as the necessary available equipment to perform the work as required by the Contract Documents. We will place at the disposal of the work our skills and ability as subcontractor and mechanic. We will provide a sufficient number of skilled workers, under proper supervision with adequate equipment, so that the work will be completed in the most expeditious workmanlike manner.

E. **Base Bid Breakdown** SEE SPREADSHEET

	Labor	Material	Totals
ECM 5.1 Middle Park High School			36,525.13
ECM 5.2 Middle Park High School			16,074.11
ECM 5.1 East Grand Middle School			74,530.11
ECM 5.2 East Grand Middle School			8,415.61
ECM 5.1 Fraser Valley Elementary School			25,694.32
ECM 5.2 Fraser Valley Elementary School			6,238.51
ECM 5.1 Granby Elementary School			17,304.07

ECM 5.2 Granby Elementary School	_____	_____	10,014.05
ECM 5.1 Grand Lake Elementary School	_____	_____	14,988.33
ECM 5.2 Grand Lake Elementary School	_____	_____	4,647.24
ECM 5.1 Indian Peaks Charter School	_____	_____	3,716.69
ECM 5.1 District Office	_____	_____	5,683.46 (5.1 - 5.2)
ECM 5.1 Transportation Facility	_____	_____	2,488.10
ECM 5.2 Transportation Facility	_____	_____	4,348.58
Subtotals	_____	_____	230,411.39

F. **Bonds**

If awarded this work, Bidder agrees to deliver to Honeywell with the executed Subcontract Agreement Performance Bond and Labor and Material Bond as security for the faithful performance of the contract and/or for the payment of all persons performing labor or furnishing materials in connection therewith.

Price for the Performance Bond and Payment Bond:

$ 3,456.17

Name of Surety: HARTFORD CASUALTY

G. **Extra Work**

Our time and material formula which may be used to price change or additions to the work that may be authorized or directed by Honeywell are as follows:

(1) Straight Time _____ Unit Price Prevails.

(2) Payroll Taxes _____

(3) Overhead % of 1 ____

(4) Profit % of 1 ____

(5) Insurance % of 1 ____

(6) Equipment Rentals _____

(7) Materials – at cost plus % _____

(8) Premium Time _____

H. **Insurance**

If awarded this work, Bidder agrees to furnish prior to start of work at site an Insurance Certificate showing evidence of compliance with the requirements established by the Subcontract Agreement, including the required endorsement on the reverse side of the Certificate, and further agrees that if Bidder subcontracts any of the work, Bidders subcontractor(s) will comply with the insurance requirements and furnish his certificate.

I. **Codes, Standards and Reference Documents**

The work shall be performed in full accordance with the applicable provisions of the following:

NEC
OSHA

J. **Time of Completion**

Bidders must indicate below the calendar days required to perform their work. All schedules are subject to negotiation and agreement prior to contract award and all subcontractors will be required to perform their work in accordance with the overall schedule as directed by Honeywell.

Calendar Days After Notice to Proceed: 90

K. **Labor and Wages**

In accordance with laws of Colorado, C.R.S. § 8-17-101, et. seq., as amended, Colorado labor shall be employed to perform the Work to the extent of not less than eighty percent (80%) of each type or class of labor in the several classifications of skilled and common labor employed on the Project. The contractor must comply with the Davis-Bacon Wage Act.

L. **Relations of Owner, Contractor and Subcontractor**

In accordance with the State of Colorado contract with Honeywell where Honeywell is the Contractor, the following Section 16 of the Contract Schedule A requires that Honeywell bind each subcontractor to the terms of the Contract between the State of Colorado and Honeywell. This section states:
"The Contractor agrees to bind each Subcontractor to the terms of these General Conditions and to the requirements of the Drawings and Specifications, and any Addenda thereto, and also all the other Contract Documents and Procedural Documents, as applicable to the Work of such Subcontractor. The Contractor further agrees to bind each Subcontractor to those terms of the General Conditions which expressly require that Subcontractors also be bound, including without limitation, requirements that Subcontractors waive all rights of subrogation, provide adequate general commercial liability and property insurance, automobile insurance and workers' compensation insurance as provided in Article 25, Insurance. The Contractor shall be fully responsible to the Principal Representative for the acts and omissions of Subcontractors and of persons either directly or indirectly employed by them. All instructions or orders in respect to Work to be done by Subcontractors shall be given to the Contractor. Nothing contained in the Contract Documents shall be deemed to create any contractual relationship whatsoever between any Subcontractor and the State of Colorado acting by and through its Principal Representative.

An addendum to the POSA will be provided which states this relationship. The draft contract documents between the State of Colorado and Honeywell have been supplied as attachments to this Request for Quote.

M. **Understanding and Certification**

We agree not to alter or withdraw our bid for a one hundred and eighty (180) day period from the day set for receiving the bids.

We understand and agree that Honeywell reserves the right to reject any and all bids and to make an award to other than the low Bidder.

We herein certify that we and all our lower tier subcontractors will comply with all of the safety regulations and working rules while working on this project.

Submitted By:

(Name)	Retro-Tech Systems (Company Name)
Vice-President (Title)	2800 Bernice Rd #17A (Address)
5-22-09 (Date)	Lansing, IL 60438 (City, State, Zip)

We are incorporated under the laws of the State of INDIANA.

Our license number is ME-5348 OR 6302.
See Attached

Honeywell

Subcontractor Verification and Pricing Form

Date: May 14 09

Project Name: EGSD BF 101

Contractor Name and Address: CANAM BLDG ENV SPEC
5865-A Coopers Ave
Mississauga Ont
L4Z 1R9

		YES	NO	N/A
	IS SUBCONTRACTOR:			
A	Currently Registered in the Honeywell Web PO System?	✓		
B	Currently Using the Honeywell WebPO System E-Invoicing?	✓		
C	Capable of Design/Build including $5M in E&O Insurance?	✓		
D	Currently Licensed in accordance with State Requirements for the Work to be Performed?			✓
	THE SUBCONTRACTOR AGREES TO THE FOLLOWING:			
1	Accept Terms and Conditions as set forth in the current standard Honeywell Subcontract Agreement Rev # _____ (insert Rev)	✓		
2	Accept Entire Scope of Work description dated _____ (insert date)	✓		
3	Include All Applicable Taxes in the Quoted Firm Price.	✓		
4	Quoted Firm Price includes compliance with all state & local code requirements, mandates from state & local inspectors, and all required Permits & Fees.			✓
5	Include 100% Payment and 100% Performance Bonds in the Total Quoted Firm Price when Price exceeds $50,000. *NOT APPLICABLE FOR PROFESSIONAL ENGINEERING SERVICES SUBCONTRACT.*			✓
6	Include Insurance Coverage and Costs as described in the Attached Exhibit A. *ADDITIONALLY, IF PROFESSIONAL ENGINEERING SERVICES SUBCONTRACT, $5M E&O INSURANCE IS REQUIRED.*			✓
7	Include the Cost of the Services of a Professional Engineer to stamp and seal the drawings including Mechanical, Electrical, Structural, Civil, etc.			✓
8	Include the Scope and Cost for all Measurement and Verification work and savings described in the M&V Methodology description dated _____ (insert date)			✓
9	Include all second and third shift and weekend labor costs associated with completing this project within the stated Calendar Days to Complete.	✓		
10	Include "Union" labor for all work on this project claimed by the United Association of Plumbers and Pipe fitters.			✓
11	Meet all Local Labor Laws and Include Labor Costs to meet Prevailing Wage, Davis-Bacon, etc. as required by local jurisdiction.	✓		

Total Cost of Performance and Payment Bonds from Item 5 above: $ N/A

Total Quoted Price of Project (including Bonds): $ 38 091

Total Quoted Price Good Through (insert Date): May 2009

Calendar Days to Complete from Notice to Proceed: 90 days

Company Representative Signature:

Company Representative Name (Printed): Ken MacDowell

Position in Company (Title): Account Manager

State Contracting License No.:

Federal Identification Number: 100-775-212 BN

Comments or Exceptions: (Required for all columns marked No or Not Applicable (N/A))

Section 2
Proposal Form

The Bidder shall submit his quotation on his company letterhead, following exactly the format shown herein.

Gentlemen:

We the undersigned, acknowledge receipt of the Bid Documents listed in Section 1 of your Request for Quotation RFQ Number EGSD BE 101 dated Apr 29 09

We also acknowledge receipt of the following addenda and supplements to the Bid Documents and have included the costs associated therewith in our lump sum price.

(List documents. If none, write None.)

In strict compliance therewith we submit our Proposal, which includes all applicable taxes.

A. **Base Bid** — **Firm Lump Sum Price**

All labor, materials, tools and equipment necessary to install all ECMs (including bonds) in accordance with the requirements of the Bid Documents. $38,091.00

B. **Alternates** (If none, write None.)

C. **Subcontracts**

The proportion of Bidder's work to be performed by lower tier subcontractors is approximately _____% of the total work. (If none, write None.)

D. **Experience, Ability and Intent**

We assert that we have the full knowledge and experience as well as the necessary available equipment to perform the work as required by the Contract Documents. We will place at the disposal of the work our skills and ability as subcontractor and mechanic. We will provide a sufficient number of skilled workers, under proper supervision with adequate equipment, so that the work will be completed in the most expeditious workmanlike manner.

E. **Base Bid Breakdown**

	Labor	Material	Totals
ECM 6.1 Middle Park High School	$8,099	$5399	$13498
ECM 6.1 Fraser Valley Elementary School	$4354	$2902	$7256
ECM 6.1 Granby Elementary School	$4534	$3022	$7556
ECM 6.1 Grand Lake Elementary School	$1867	$1244	$3111
ECM 6.1 Indian Peaks Charter School	$2346	$1564	$3910
ECM 6.1 District Office	$1656	$1104	$2760
Subtotals	$22,856	$15235	$38091

F. **Bonds**

If awarded this work, Bidder agrees to deliver to Honeywell with the executed Subcontract Agreement Performance Bond and Labor and Material Bond as security for the faithful performance of the contract and/or for the payment of all persons performing labor or furnishing materials in connection therewith.

Price for the Performance Bond and Payment Bond:

$_____

Name of Surety:_____

G. **Extra Work**

Our time and material formula which may be used to price change or additions to the work that may be authorized or directed by Honeywell are as follows:

(1) Straight Time _____

(2) Payroll Taxes _____

(3) Overhead % of 1 ____

(4) Profit % of 1 ____

(5) Insurance % of 1 ____

(6) Equipment Rentals _____

(7) Materials – at cost plus % _____

(8) Premium Time _____

H. **Insurance**

If awarded this work, Bidder agrees to furnish prior to start of work at site an Insurance Certificate showing evidence of compliance with the requirements established by the Subcontract Agreement, including the required endorsement on the reverse side of the Certificate, and further agrees that if Bidder subcontracts any of the work, Bidders subcontractor(s) will comply with the insurance requirements and furnish his certificate.

I. **Codes, Standards and Reference Documents**

The work shall be performed in full accordance with the applicable provisions of the following:

_____
_____
_____
_____

J. **Time of Completion**

Bidders must indicate below the calendar days required to perform their work. All schedules are subject to negotiation and agreement prior to contract award and all subcontractors will be required to perform their work in accordance with the overall schedule as directed by Honeywell.

Calendar Days After Notice to Proceed: 90

K. **Labor and Wages**

In accordance with laws of Colorado, C.R.S. § 8-17-101, et. seq., as amended, Colorado labor shall be employed to perform the Work to the extent of not less than eighty percent (80%) of each type or class of labor in the several classifications of skilled and common labor employed on the Project.

L. **Relations of Owner, Contractor and Subcontractor**

In accordance with the State of Colorado contract with Honeywell where Honeywell is the Contractor, the following Section 16 of the Contract Schedule A requires that Honeywell bind each subcontractor to the terms of the Contract between the State of Colorado and Honeywell. This section states:
"The Contractor agrees to bind each Subcontractor to the terms of these General Conditions and to the requirements of the Drawings and Specifications, and any Addenda thereto, and also all the other Contract Documents and Procedural Documents, as applicable to the Work of such Subcontractor. The Contractor further agrees to bind each Subcontractor to those terms of the General Conditions which expressly require that Subcontractors also be bound, including without limitation, requirements that Subcontractors waive all rights of subrogation, provide adequate general commercial liability and property insurance, automobile insurance and workers' compensation insurance as provided in Article 25, Insurance. The Contractor shall be fully responsible to the Principal Representative for the acts and omissions of Subcontractors and of persons either directly or indirectly employed by them. All instructions or orders in respect to Work to be done by Subcontractors shall be given to the Contractor. Nothing contained in the Contract Documents shall be deemed to create any contractual relationship whatsoever between any Subcontractor and the State of Colorado acting by and through its Principal Representative.

An addendum to the POSA will be provided which states this relationship. The draft contract documents between the State of Colorado and Honeywell have been supplied as attachments to this Request for Quote.

M. **Understanding and Certification**

We agree not to alter or withdraw our bid for a one hundred and eighty (180) day period from the day set for receiving the bids.

We understand and agree that Honeywell reserves the right to reject any and all bids and to make an award to other than the low Bidder.

We herein certify that we and all our lower tier subcontractors will comply with all of the safety regulations and working rules while working on this project.

Submitted By:

Ken MacDowell (Name)	CANAM BLDG ENV SPEC (Company Name)
Account Manager (Title)	5865-A Coopers Ave (Address)
May 14 2009 (Date)	Mississauga ONT L4Z 1R9 (City, State, Zip)

We are incorporated under the laws of the State of Ontario.

Our license number is 100-775-212 BN.

obligation, Honeywell requires subcontractors to comply with FAR 52.219-8 if the subcontract offers further subcontracting opportunities.

For ease of reference FAR 52.219-8 (Utilization of Small Business Concerns) is set forth as follows: http://www.arnet.gov/far/current/html/52_217_221.html.

20.2 Furthermore, with respect to subcontracts awarded by Honeywell that offer further subcontracting opportunities in excess of $500,000 ($1,000,000 for construction), Honeywell has committed, in connection with its U. S. Government contracts to flow down FAR 52.219-9 in all subcontracts unless exempted from compliance with the requirement by its own contract with the U. S. Government. Accordingly, to satisfy this obligation, Honeywell requires subcontractors to comply with FAR 52.219-9 if the subcontract allows further subcontracting opportunities in excess of $500,000 ($1,000,000 for construction) or to adopt a plan similar to the plan required by this clause.

For ease of reference FAR 52.219-9 (Utilization of Small Business Concerns) is set forth as follows: http://www.arnet.gov/far/current/html/52_217_221.html.

ARTICLE 21
SUSPENSION AND DEBARMENT

21.1 Subcontractor hereby certifies, for itself and all of its lower-tier subcontractors, that as of the date of the execution of this Agreement, the Subcontractor, nor any lower-tier subcontractors, nor any suppliers are under suspension or debarment by any governmental entity, instrumentality or authority.

21.2 Subcontractor's obligations pursuant to this provision are ongoing from and after the effective date of this Agreement through the termination date thereof. Accordingly, the Subcontractor will have an obligation to inform Honeywell if, at any time during the term of the Agreement, it or any of its lower-tier subcontractors are suspended or debarred by any governmental entity, instrumentality or authority. Such notification will be made within fifteen (15) days of the date of suspension or disbarment.

21.3 The failure of the Subcontractor to notify Honeywell of any suspension or debarment by any governmental entity, instrumentality or authority will constitute an event of default of this Agreement with Honeywell.

ARTICLE 22
ENTIRE SUBCONTRACT

This Subcontract and the Subcontract Documents contains the entire understanding between the parties with respect to the subject matter in this Subcontract and supersedes any prior representations or agreements, oral or written, and all other communications between the parties relating to the subject in this Subcontract. This Subcontract cannot be amended except by an instrument in writing executed by an authorized supply management representative of Honeywell and an authorized representative of the Subcontractor. The terms and conditions of the contract between Honeywell and Customer, and any other Subcontract Documents incorporated therein insofar as they relate in any way, directly or indirectly, to the Subcontract Work covered by this Subcontract, are hereby incorporated into this Subcontract.

This Subcontract is entered into as of the date first written above.

Subcontractor:	Honeywell International Inc.
By: _____	By: _____
Print Name: Ken MacDowell	Print Name: ____
Title: Account Manager	Title: ____
Date: May 14 2009	Date: ____

f. Standards of comfort

HVAC Systems:

1. Definitions of occupied and unoccupied periods, plus acceptable dry bulb temperature ranges, maxima, and minima for same, are provided on the following pages for each space served by HVAC systems that will be affected by the energy performance contract. Dry bulb temperatures must be restored to the acceptable comfort range by the beginning of each occupied period.
2. Outside air flows provided by new HVAC systems shall be no lower than those found in ASHRAE Standard 62.1-2004. Where existing HVAC systems are to be rebalanced (as described under the heading for ECM 8.1), outside air flows will be no less than called for in the original design documents.

Lighting Systems:

1. New illumination levels shall conform to the recommendations provided in the Ninth Edition of *The IESNA Lighting Handbook*.

East Grand School District

Areas*: East Grand School District Storage/Mechanical/Custodian

	Occupancy Begins	Occupancy Ends
Mon - Thur:	6:00 AM	4:00 PM
Friday:	6:00 AM	11:00 AM
Saturdays:		
Sundays:		
Holidays:		

Occupancy period should include time required for performance of custodial tasks, unless air handling systems are to be scheduled off during these times.

Annual occupied hours:	2,340
Acceptable occupied temperature range during heating season:	68° F
Minimum unoccupied setback temperature during heating season:	65° F
Acceptable occupied temperature range during cooling season:	N/A
Maximum unoccupied setup temperature during cooling season:	N/A

Exceptions to above occupancy table: please estimate the number of hours per week these areas are used outside of the standard hours of occupancy, and note any other exceptions below.

East Grand School District

Areas*: Middle Park High School Computer Labs

	Occupancy Begins	Occupancy Ends
Mon - Thur:	6:00 AM	4:00 PM
Friday:	6:00 AM	11:00 AM
Saturdays:		
Sundays:		
Holidays:		

Occupancy period should include time required for performance of custodial tasks, unless air handling systems are to be scheduled off during these times.

Annual occupied hours:	2,340
Acceptable occupied temperature range during heating season:	68 - 72° F
Minimum unoccupied setback temperature during heating season:	65° F
Acceptable occupied temperature range during cooling season:	N/A
Maximum unoccupied setup temperature during cooling season:	N/A

Exceptions to above occupancy table: please estimate the number of hours per week these areas are used outside of the standard hours of occupancy, and note any other exceptions below.

East Grand School District

Areas*: Middle Park High School Media Center/Library, Original Classrooms, Band Room

	Occupancy Begins	Occupancy Ends
Mon - Thur:	6:00 AM	4:00 PM
Friday:		
Saturdays:		
Sundays:		
Holidays:		

Occupancy period should include time required for performance of custodial tasks, unless air handling systems are to be scheduled off during these times.

Annual occupied hours:	2,080
Acceptable occupied temperature range during heating season:	68 - 72° F
Minimum unoccupied setback temperature during heating season:	65° F
Acceptable occupied temperature range during cooling season:	N/A
Maximum unoccupied setup temperature during cooling season:	N/A

Exceptions to above occupancy table: please estimate the number of hours per week these areas are used outside of the standard hours of occupancy, and note any othe exceptions below.

East Grand School District

Areas*: Middle Park High School 1998 & 2008 Classroom Additions

	Occupancy Begins	Occupancy Ends
Mon - Thur:	6:00 AM	4:00 PM
Friday:		
Saturdays:		
Sundays:		
Holidays:		

Occupancy period should include time required for performance of custodial tasks, unless air handling systems are to be scheduled off during these times.

Annual occupied hours:	2,080
Acceptable occupied temperature range during heating season:	68 - 72° F
Minimum unoccupied setback temperature during heating season:	60
Acceptable occupied temperature range during cooling season:	N/A
Maximum unoccupied setup temperature during cooling season:	N/A

Exceptions to above occupancy table: please estimate the number of hours per week these areas are used outside of the standard hours of occupancy, and note any othe exceptions below.

East Grand School District

Areas*: Middle Park High School Administration Offices

	Occupancy Begins	Occupancy Ends
Mon - Thur:	6:00 AM	4:00 PM
Friday:	6:00 AM	11:00 AM
Saturdays:		
Sundays:		
Holidays:		

Occupancy period should include time required for performance of custodial tasks, unless air handling systems are to be scheduled off during these times.

Annual occupied hours:	2,340
Acceptable occupied temperature range during heating season:	72° F
Minimum unoccupied setback temperature during heating season:	60
Acceptable occupied temperature range during cooling season:	N/A
Maximum unoccupied setup temperature during cooling season:	N/A

Exceptions to above occupancy table: please estimate the number of hours per week these areas are used outside of the standard hours of occupancy, and note any othe exceptions below.

East Grand School District

Areas*: Middle Park High School Vocational Shops

	Occupancy Begins	Occupancy Ends
Mon - Thur:	6:00 AM	4:00 PM
Friday:	6:00 AM	11:00 AM
Saturdays:		
Sundays:		
Holidays:		

Occupancy period should include time required for performance of custodial tasks, unless air handling systems are to be scheduled off during these times.

Annual occupied hours:	2,340
Acceptable occupied temperature range during heating season:	65 - 72° F
Minimum unoccupied setback temperature during heating season:	65° F
Acceptable occupied temperature range during cooling season:	N/A
Maximum unoccupied setup temperature during cooling season:	N/A

Exceptions to above occupancy table: please estimate the number of hours per week these areas are used outside of the standard hours of occupancy, and note any other exceptions below.

East Grand School District

Areas*: Middle Park High School Commons Restrooms

	Occupancy Begins	Occupancy Ends
Mon - Thur:	6:00 AM	4:00 PM
Friday:	6:00 AM	11:00 AM
Saturdays:		
Sundays:		
Holidays:		

Occupancy period should include time required for performance of custodial tasks, unless air handling systems are to be scheduled off during these times.

Annual occupied hours:	2,655
Acceptable occupied temperature range during heating season:	68 - 72° F
Minimum unoccupied setback temperature during heating season:	65° F
Acceptable occupied temperature range during cooling season:	N/A
Maximum unoccupied setup temperature during cooling season:	N/A

Exceptions to above occupancy table: please estimate the number of hours per week these areas are used outside of the standard hours of occupancy, and note any othe exceptions below.

November thru March: Friday 6AM to 6PM (Games) (Additional 147 hours)
November thru March: Sat 11AM to 7PM (Games) (Additional 168 hours)

East Grand School District

Areas*: Middle Park High School New & Old Gym

	Occupancy Begins	Occupancy Ends
Mon - Thur:	6:00 AM	4:00 PM
Friday:	6:00 AM	11:00 AM
Saturdays:		
Sundays:		
Holidays:		

Occupancy period should include time required for performance of custodial tasks, unless air handling systems are to be scheduled off during these times.

Annual occupied hours:	2,655
Acceptable occupied temperature range during heating season:	68 - 72° F
Minimum unoccupied setback temperature during heating season:	60
Acceptable occupied temperature range during cooling season:	N/A
Maximum unoccupied setup temperature during cooling season:	N/A

Exceptions to above occupancy table: please estimate the number of hours per week these areas are used outside of the standard hours of occupancy, and note any othe exceptions below.

November thru March: Friday 6AM to 6PM (Games) (Additional 147 hours)
November thru March: Sat 11AM to 7PM (Games) (Additional 168 hours)

East Grand School District

Areas*: Middle Park High School Locker Rooms

	Occupancy Begins	Occupancy Ends
Mon - Thur:	6:00 AM	4:00 PM
Friday:	6:00 AM	11:00 AM
Saturdays:		
Sundays:		
Holidays:		

Occupancy period should include time required for performance of custodial tasks, unless air handling systems are to be scheduled off during these times.

Annual occupied hours:	2,760
Acceptable occupied temperature range during heating season:	68 - 72° F
Minimum unoccupied setback temperature during heating season:	60
Acceptable occupied temperature range during cooling season:	N/A
Maximum unoccupied setup temperature during cooling season:	N/A

Exceptions to above occupancy table: please estimate the number of hours per week these areas are used outside of the standard hours of occupancy, and note any othe exceptions below.

November thru March: Friday 6AM to 9PM (Games) (Additional 210 hours)
November thru March: Sat 11AM to 9PM (Games) (Additional 210 hours)

East Grand School District

Areas*: Middle Park High School Kitchen

	Occupancy Begins	Occupancy Ends
Mon - Thur:	6:00 AM	11:00 AM
Friday:		
Saturdays:		
Sundays:		
Holidays:		

Occupancy period should include time required for performance of custodial tasks, unless air handling systems are to be scheduled off during these times.

Annual occupied hours:	1,040
Acceptable occupied temperature range during heating season:	68 - 72° F
Minimum unoccupied setback temperature during heating season:	65° F
Acceptable occupied temperature range during cooling season:	N/A
Maximum unoccupied setup temperature during cooling season:	N/A

Exceptions to above occupancy table: please estimate the number of hours per week these areas are used outside of the standard hours of occupancy, and note any other exceptions below.

East Grand School District

Areas*: Middle Park High School Auditorium (HVU-1)

	Occupancy Begins	Occupancy Ends
Mon - Thur:	6:00 AM	4:00 PM
Friday:		
Saturdays:		
Sundays:		
Holidays:		

Occupancy period should include time required for performance of custodial tasks, unless air handling systems are to be scheduled off during these times.

Annual occupied hours:	2,165
Acceptable occupied temperature range during heating season:	68 - 72° F
Minimum unoccupied setback temperature during heating season:	60
Acceptable occupied temperature range during cooling season:	N/A
Maximum unoccupied setup temperature during cooling season:	N/A

Exceptions to above occupancy table: please estimate the number of hours per week these areas are used outside of the standard hours of occupancy, and note any othe exceptions below.

Friday: Play/Practice (Additional 72 hours)
Sat: Off Except For Concerts (Additional 13 hours)

East Grand School District

Areas*: Middle Park High School Weight Room

	Occupancy Begins	Occupancy Ends
Mon - Thur:	6:00 AM	4:00 PM
Friday:		
Saturdays:		
Sundays:		
Holidays:		

Occupancy period should include time required for performance of custodial tasks, unless air handling systems are to be scheduled off during these times.

Annual occupied hours:	2,080
Acceptable occupied temperature range during heating season:	68 - 70° F
Minimum unoccupied setback temperature during heating season:	60
Acceptable occupied temperature range during cooling season:	N/A
Maximum unoccupied setup temperature during cooling season:	N/A

Exceptions to above occupancy table: please estimate the number of hours per week these areas are used outside of the standard hours of occupancy, and note any othe exceptions below.

East Grand School District

Areas*: East Grand Middle School Administration Offices

	Occupancy Begins	Occupancy Ends
Mon - Thur:	6:00 AM	4:00 PM
Friday:	6:00 AM	11:00 AM
Saturdays:		
Sundays:		
Holidays:		

Occupancy period should include time required for performance of custodial tasks, unless air handling systems are to be scheduled off during these times.

Annual occupied hours:	2,340
Acceptable occupied temperature range during heating season:	72 - 74° F
Minimum unoccupied setback temperature during heating season:	65° F
Acceptable occupied temperature range during cooling season:	N/A
Maximum unoccupied setup temperature during cooling season:	N/A

Exceptions to above occupancy table: please estimate the number of hours per week these areas are used outside of the standard hours of occupancy, and note any other exceptions below.

East Grand School District

Areas*: East Grand Middle School Gym & Commons

	Occupancy Begins	Occupancy Ends
Mon - Thur:	6:00 AM	4:00 PM
Friday:	6:00 AM	11:00 AM
Saturdays:		
Sundays:		
Holidays:		

Occupancy period should include time required for performance of custodial tasks, unless air handling systems are to be scheduled off during these times.

Annual occupied hours:	2,655
Acceptable occupied temperature range during heating season:	68 - 70° F
Minimum unoccupied setback temperature during heating season:	60
Acceptable occupied temperature range during cooling season:	N/A
Maximum unoccupied setup temperature during cooling season:	N/A

Exceptions to above occupancy table: please estimate the number of hours per week these areas are used outside of the standard hours of occupancy, and note any othe exceptions below.

November thru March: Friday 6AM to 6PM (Games) (Additional 147 hours)
November thru March: Sat 11AM to 7PM (Games) (Additional 168 hours)

East Grand School District

Areas*: East Grand Middle School Locker Rooms

	Occupancy Begins	Occupancy Ends
Mon - Thur:	6:00 AM	4:00 PM
Friday:	6:00 AM	11:00 AM
Saturdays:		
Sundays:		
Holidays:		

Occupancy period should include time required for performance of custodial tasks, unless air handling systems are to be scheduled off during these times.

Annual occupied hours:	2,760
Acceptable occupied temperature range during heating season:	68 - 72° F
Minimum unoccupied setback temperature during heating season:	60
Acceptable occupied temperature range during cooling season:	N/A
Maximum unoccupied setup temperature during cooling season:	N/A

Exceptions to above occupancy table: please estimate the number of hours per week these areas are used outside of the standard hours of occupancy, and note any othe exceptions below.

November thru March: Friday 6AM to 9PM (Games) (Additional 210 hours)
November thru March: Sat 11AM to 9PM (Games) (Additional 210 hours)

East Grand School District

Areas*: East Grand Middle School Kitchen

	Occupancy Begins	Occupancy Ends
Mon - Thur:	9:00 AM	2:00 PM
Friday:		
Saturdays:		
Sundays:		
Holidays:		

Occupancy period should include time required for performance of custodial tasks, unless air handling systems are to be scheduled off during these times.

Annual occupied hours:	1,040
Acceptable occupied temperature range during heating season:	68 - 70° F
Minimum unoccupied setback temperature during heating season:	60
Acceptable occupied temperature range during cooling season:	N/A
Maximum unoccupied setup temperature during cooling season:	N/A

Exceptions to above occupancy table: please estimate the number of hours per week these areas are used outside of the standard hours of occupancy, and note any othe exceptions below.

East Grand School District

Areas*: East Grand Middle School Typical Classroom, Band Room

	Occupancy Begins	Occupancy Ends
Mon - Thur:	6:00 AM	4:00 PM
Friday:		
Saturdays:		
Sundays:		
Holidays:		

Occupancy period should include time required for performance of custodial tasks, unless air handling systems are to be scheduled off during these times.

Annual occupied hours:	2,080
Acceptable occupied temperature range during heating season:	68 - 72° F
Minimum unoccupied setback temperature during heating season:	65° F
Acceptable occupied temperature range during cooling season:	N/A
Maximum unoccupied setup temperature during cooling season:	N/A

Exceptions to above occupancy table: please estimate the number of hours per week these areas are used outside of the standard hours of occupancy, and note any othe exceptions below.

East Grand School District

Areas*: Fraser Valley Elementary New Gym

	Occupancy Begins	Occupancy Ends
Mon - Thur:	6:00 AM	4:00 PM
Friday:	6:00 AM	11:00 AM
Saturdays:		
Sundays:		
Holidays:		

Occupancy period should include time required for performance of custodial tasks, unless air handling systems are to be scheduled off during these times.

Annual occupied hours:	2,487
Acceptable occupied temperature range during heating season:	68 - 72° F
Minimum unoccupied setback temperature during heating season:	60
Acceptable occupied temperature range during cooling season:	N/A
Maximum unoccupied setup temperature during cooling season:	N/A

Exceptions to above occupancy table: please estimate the number of hours per week these areas are used outside of the standard hours of occupancy, and note any othe exceptions below.

November thru March: Friday 6AM to 6PM (Games) (Additional 147 hours)

East Grand School District

Areas*: Fraser Valley Elementary School 1998 Classroom/Commons Addition

	Occupancy Begins	Occupancy Ends
Mon - Thur:	6:00 AM	4:00 PM
Friday:	6:00 AM	11:00 AM
Saturdays:		
Sundays:		
Holidays:		

Occupancy period should include time required for performance of custodial tasks, unless air handling systems are to be scheduled off during these times.

Annual occupied hours:	2,340
Acceptable occupied temperature range during heating season:	70 - 72° F
Minimum unoccupied setback temperature during heating season:	60
Acceptable occupied temperature range during cooling season:	N/A
Maximum unoccupied setup temperature during cooling season:	N/A

Exceptions to above occupancy table: please estimate the number of hours per week these areas are used outside of the standard hours of occupancy, and note any othe exceptions below.

East Grand School District

Areas*: Grand Lake Elementary School Gym

	Occupancy Begins	Occupancy Ends
Mon - Thur:	6:00 AM	4:00 PM
Friday:	6:00 AM	11:00 AM
Saturdays:		
Sundays:		
Holidays:		

Occupancy period should include time required for performance of custodial tasks, unless air handling systems are to be scheduled off during these times.

Annual occupied hours:	2,420
Acceptable occupied temperature range during heating season:	68 - 72° F
Minimum unoccupied setback temperature during heating season:	60
Acceptable occupied temperature range during cooling season:	N/A
Maximum unoccupied setup temperature during cooling season:	N/A

Exceptions to above occupancy table: please estimate the number of hours per week these areas are used outside of the standard hours of occupancy, and note any othe exceptions below.

Activities: (Additional 80 hours)

East Grand School District

Areas*: Grand Lake Elementary School Music Room

	Occupancy Begins	Occupancy Ends
Mon - Thur:	6:00 AM	4:00 PM
Friday:	6:00 AM	11:00 AM
Saturdays:		
Sundays:		
Holidays:		

Occupancy period should include time required for performance of custodial tasks, unless air handling systems are to be scheduled off during these times.

Annual occupied hours:	2,340
Acceptable occupied temperature range during heating season:	70 - 72° F
Minimum unoccupied setback temperature during heating season:	60
Acceptable occupied temperature range during cooling season:	N/A
Maximum unoccupied setup temperature during cooling season:	N/A

Exceptions to above occupancy table: please estimate the number of hours per week these areas are used outside of the standard hours of occupancy, and note any othe exceptions below.

East Grand School District

Areas*: Granby Elementary School 2005 Classroom Addition

	Occupancy Begins	Occupancy Ends
Mon - Thur:	6:00 AM	4:00 PM
Friday:	6:00 AM	11:00 AM
Saturdays:		
Sundays:		
Holidays:		

Occupancy period should include time required for performance of custodial tasks, unless air handling systems are to be scheduled off during these times.

Annual occupied hours:	2,340
Acceptable occupied temperature range during heating season:	70 - 72° F
Minimum unoccupied setback temperature during heating season:	60
Acceptable occupied temperature range during cooling season:	N/A
Maximum unoccupied setup temperature during cooling season:	N/A

Exceptions to above occupancy table: please estimate the number of hours per week these areas are used outside of the standard hours of occupancy, and note any othe exceptions below.

East Grand School District

Areas*: Grand Lake, Fraser Valley, & Granby Elementary School Administration Offices

	Occupancy Begins	Occupancy Ends
Mon - Thur:	6:00 AM	4:00 PM
Friday:	6:00 AM	11:00 AM
Saturdays:		
Sundays:		
Holidays:		

Occupancy period should include time required for performance of custodial tasks, unless air handling systems are to be scheduled off during these times.

Annual occupied hours:	2,361
Acceptable occupied temperature range during heating season:	72 - 74° F
Minimum unoccupied setback temperature during heating season:	65° F
Acceptable occupied temperature range during cooling season:	N/A
Maximum unoccupied setup temperature during cooling season:	N/A

Exceptions to above occupancy table: please estimate the number of hours per week these areas are used outside of the standard hours of occupancy, and note any othe exceptions below.

Winter Mon - Thur) : Nov - Mar: 5 AM to 4 PM (Additional 21 hours)

East Grand School District

Areas*: Grand Lake, Original Building Fraser Valley, & Original Building Granby Elementary School Classrooms/Commons

	Occupancy Begins	Occupancy Ends
Mon - Thur:	6:00 AM	4:00 PM
Friday:	6:00 AM	11:00 AM
Saturdays:		
Sundays:		
Holidays:		

Occupancy period should include time required for performance of custodial tasks, unless air handling systems are to be scheduled off during these times.

Annual occupied hours:	2,340
Acceptable occupied temperature range during heating season:	70 - 72° F
Minimum unoccupied setback temperature during heating season:	65° F
Acceptable occupied temperature range during cooling season:	N/A
Maximum unoccupied setup temperature during cooling season:	N/A

Exceptions to above occupancy table: please estimate the number of hours per week these areas are used outside of the standard hours of occupancy, and note any othe exceptions below.

East Grand School District

Areas*: Granby Elementary Gym & Fraser Valley Old Gym

	Occupancy Begins	Occupancy Ends
Mon - Thur:	6:00 AM	4:00 PM
Friday:	6:00 AM	11:00 AM
Saturdays:		
Sundays:		
Holidays:		

Occupancy period should include time required for performance of custodial tasks, unless air handling systems are to be scheduled off during these times.

Annual occupied hours:	2,420
Acceptable occupied temperature range during heating season:	68 - 72° F
Minimum unoccupied setback temperature during heating season:	65° F
Acceptable occupied temperature range during cooling season:	N/A
Maximum unoccupied setup temperature during cooling season:	N/A

Exceptions to above occupancy table: please estimate the number of hours per week these areas are used outside of the standard hours of occupancy, and note any othe exceptions below.

Activities: (Additional 80 hours)

East Grand School District

Areas*: Granby Elementary School Cafeteria

	Occupancy Begins	Occupancy Ends
Mon - Thur:	6:00 AM	4:00 PM
Friday:	6:00 AM	11:00 AM
Saturdays:		
Sundays:		
Holidays:		

Occupancy period should include time required for performance of custodial tasks, unless air handling systems are to be scheduled off during these times.

Annual occupied hours:	2,340
Acceptable occupied temperature range during heating season:	68 - 72° F
Minimum unoccupied setback temperature during heating season:	65° F
Acceptable occupied temperature range during cooling season:	N/A
Maximum unoccupied setup temperature during cooling season:	N/A

Exceptions to above occupancy table: please estimate the number of hours per week these areas are used outside of the standard hours of occupancy, and note any othe exceptions below.

East Grand School District

Areas*: Grand Lake & Granby Elementary School Media Center/Library

	Occupancy Begins	Occupancy Ends
Mon - Thur:	6:00 AM	4:00 PM
Friday:		
Saturdays:		
Sundays:		
Holidays:		

Occupancy period should include time required for performance of custodial tasks, unless air handling systems are to be scheduled off during these times.

Annual occupied hours:	2,080
Acceptable occupied temperature range during heating season:	68 - 70° F
Minimum unoccupied setback temperature during heating season:	65° F
Acceptable occupied temperature range during cooling season:	N/A
Maximum unoccupied setup temperature during cooling season:	N/A

Exceptions to above occupancy table: please estimate the number of hours per week these areas are used outside of the standard hours of occupancy, and note any othe exceptions below.

East Grand School District

Areas*: Grand Lake, Fraser Valley, & Granby Elementary School Kitchen

	Occupancy Begins	Occupancy Ends
Mon - Thur:	9:00 AM	1:00 PM
Friday:		
Saturdays:		
Sundays:		
Holidays:		

Occupancy period should include time required for performance of custodial tasks, unless air handling systems are to be scheduled off during these times.

Annual occupied hours:	832
Acceptable occupied temperature range during heating season:	70° F
Minimum unoccupied setback temperature during heating season:	65° F
Acceptable occupied temperature range during cooling season:	N/A
Maximum unoccupied setup temperature during cooling season:	N/A

Exceptions to above occupancy table: please estimate the number of hours per week these areas are used outside of the standard hours of occupancy, and note any othe exceptions below.

East Grand School District

Areas*: Indian Peaks Charter School

	Occupancy Begins	Occupancy Ends
Mon - Fri:	8:00 AM	4:00 PM
Saturdays:		
Sundays:		
Holidays:		

Occupancy period should include time required for performance of custodial tasks, unless air handling systems are to be scheduled off during these times.

Annual occupied hours:	2,080
Acceptable occupied temperature range during heating season:	68 - 72° F
Minimum unoccupied setback temperature during heating season:	60
Acceptable occupied temperature range during cooling season:	N/A
Maximum unoccupied setup temperature during cooling season:	N/A

Exceptions to above occupancy table: please estimate the number of hours per week these areas are used outside of the standard hours of occupancy, and note any othe exceptions below.

East Grand School District

Areas*: District Office Boardroom

	Occupancy Begins	Occupancy Ends
Mon - Thur:		
Friday:		
Saturdays:		
Sundays:		
Holidays:		

Occupancy period should include time required for performance of custodial tasks, unless air handling systems are to be scheduled off during these times.

Annual occupied hours:	120
Acceptable occupied temperature range during heating season:	70 - 74° F
Minimum unoccupied setback temperature during heating season:	60
Acceptable occupied temperature range during cooling season:	N/A
Maximum unoccupied setup temperature during cooling season:	N/A

Exceptions to above occupancy table: please estimate the number of hours per week these areas are used outside of the standard hours of occupancy, and note any othe exceptions below.

One to Three Tuesdays A Month: 4PM to 9PM (Additional 120 hours)

East Grand School District

Areas*: District Office Warehouse

	Occupancy Begins	Occupancy Ends
Mon - Thur:	6:00 AM	4:00 PM
Friday:		
Saturdays:		
Sundays:		
Holidays:		

Occupancy period should include time required for performance of custodial tasks, unless air handling systems are to be scheduled off during these times.

Annual occupied hours:	2,280
Acceptable occupied temperature range during heating season:	55 - 60° F
Minimum unoccupied setback temperature during heating season:	55° F
Acceptable occupied temperature range during cooling season:	N/A
Maximum unoccupied setup temperature during cooling season:	N/A

Exceptions to above occupancy table: please estimate the number of hours per week these areas are used outside of the standard hours of occupancy, and note any othe exceptions below.

Additional 200 hours per year for plowing/maintenance

East Grand School District

Areas*: District Office Typical Office

	Occupancy Begins	Occupancy Ends
Mon - Thur:	6:00 AM	4:00 PM
Friday:		
Saturdays:		
Sundays:		
Holidays:		

Occupancy period should include time required for performance of custodial tasks, unless air handling systems are to be scheduled off during these times.

Annual occupied hours:	2,080
Acceptable occupied temperature range during heating season:	72 - 74° F
Minimum unoccupied setback temperature during heating season:	60
Acceptable occupied temperature range during cooling season:	N/A
Maximum unoccupied setup temperature during cooling season:	N/A

Exceptions to above occupancy table: please estimate the number of hours per week these areas are used outside of the standard hours of occupancy, and note any othe exceptions below.

East Grand School District

Areas*: District Office West Wing/Bathrooms

	Occupancy Begins	Occupancy Ends
Mon - Thur:	6:00 AM	4:00 PM
Friday:		
Saturdays:		
Sundays:		
Holidays:		

Occupancy period should include time required for performance of custodial tasks, unless air handling systems are to be scheduled off during these times.

Annual occupied hours:	2,080
Acceptable occupied temperature range during heating season:	68° F
Minimum unoccupied setback temperature during heating season:	60
Acceptable occupied temperature range during cooling season:	N/A
Maximum unoccupied setup temperature during cooling season:	N/A

Exceptions to above occupancy table: please estimate the number of hours per week these areas are used outside of the standard hours of occupancy, and note any othe exceptions below.

East Grand School District

Areas*: Transportation Bus Barn

	Occupancy Begins	Occupancy Ends
Mon - Fri:	24/7	
Saturdays:	24/7	
Sundays:	24/7	
Holidays:	24/7	

Occupancy period should include time required for performance of custodial tasks, unless air handling systems are to be scheduled off during these times.

Annual occupied hours:	8,760
Acceptable occupied temperature range during heating season:	65° F
Minimum unoccupied setback temperature during heating season:	60
Acceptable occupied temperature range during cooling season:	N/A
Maximum unoccupied setup temperature during cooling season:	N/A

Exceptions to above occupancy table: please estimate the number of hours per week these areas are used outside of the standard hours of occupancy, and note any othe exceptions below.

East Grand School District

Areas*: Transportation Bus Barn

	Occupancy Begins	Occupancy Ends
Mon - Fri:	24/7	
Saturdays:	24/7	
Sundays:	24/7	
Holidays:	24/7	

Occupancy period should include time required for performance of custodial tasks, unless air handling systems are to be scheduled off during these times.

Annual occupied hours:	8,760
Acceptable occupied temperature range during heating season:	50° F
Minimum unoccupied setback temperature during heating season:	50° F
Acceptable occupied temperature range during cooling season:	N/A
Maximum unoccupied setup temperature during cooling season:	N/A

Exceptions to above occupancy table: please estimate the number of hours per week these areas are used outside of the standard hours of occupancy, and note any othe exceptions below.

East Grand School District

Areas*: Transportation Facility Offices

	Occupancy Begins	Occupancy Ends
Mon - Thur:	6:00 AM	5:00 PM
Friday:		
Saturdays:		
Sundays:		
Holidays:		

Occupancy period should include time required for performance of custodial tasks, unless air handling systems are to be scheduled off during these times.

Annual occupied hours:	2,288
Acceptable occupied temperature range during heating season:	70 - 72° F
Minimum unoccupied setback temperature during heating season:	60
Acceptable occupied temperature range during cooling season:	N/A
Maximum unoccupied setup temperature during cooling season:	N/A

Exceptions to above occupancy table: please estimate the number of hours per week these areas are used outside of the standard hours of occupancy, and note any othe exceptions below.

g) Energy end use analysis results

Energy end use analysis results are presented below for the following buildings:

1. Middle Park High School
2. East Grand Middle School
3. Fraser Valley Elementary School
4. Granby Elementary School
5. Grand Lake Elementary School
6. Indian Peaks Charter School
7. District Office
8. Transportation Facility

Middle Park High School – modeled using Trane Trace 700
Electric Energy

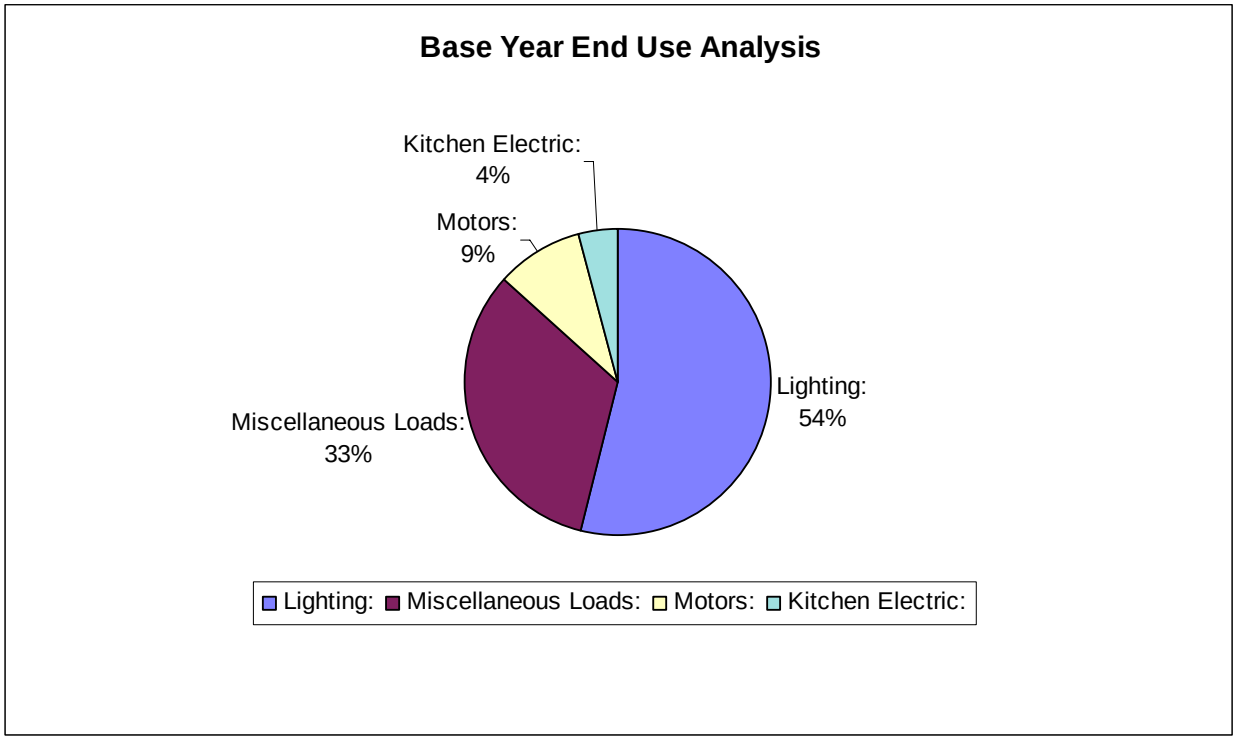

Task	kWh	Fraction
Lighting	422,700	54%
Miscellaneous Loads	257,646	33%
Motors	71,197	9%
Kitchen Electric	33,442	4%
Total	784,985	

Middle Park High School – modeled using Trane Trace 700
Fossil Fuel

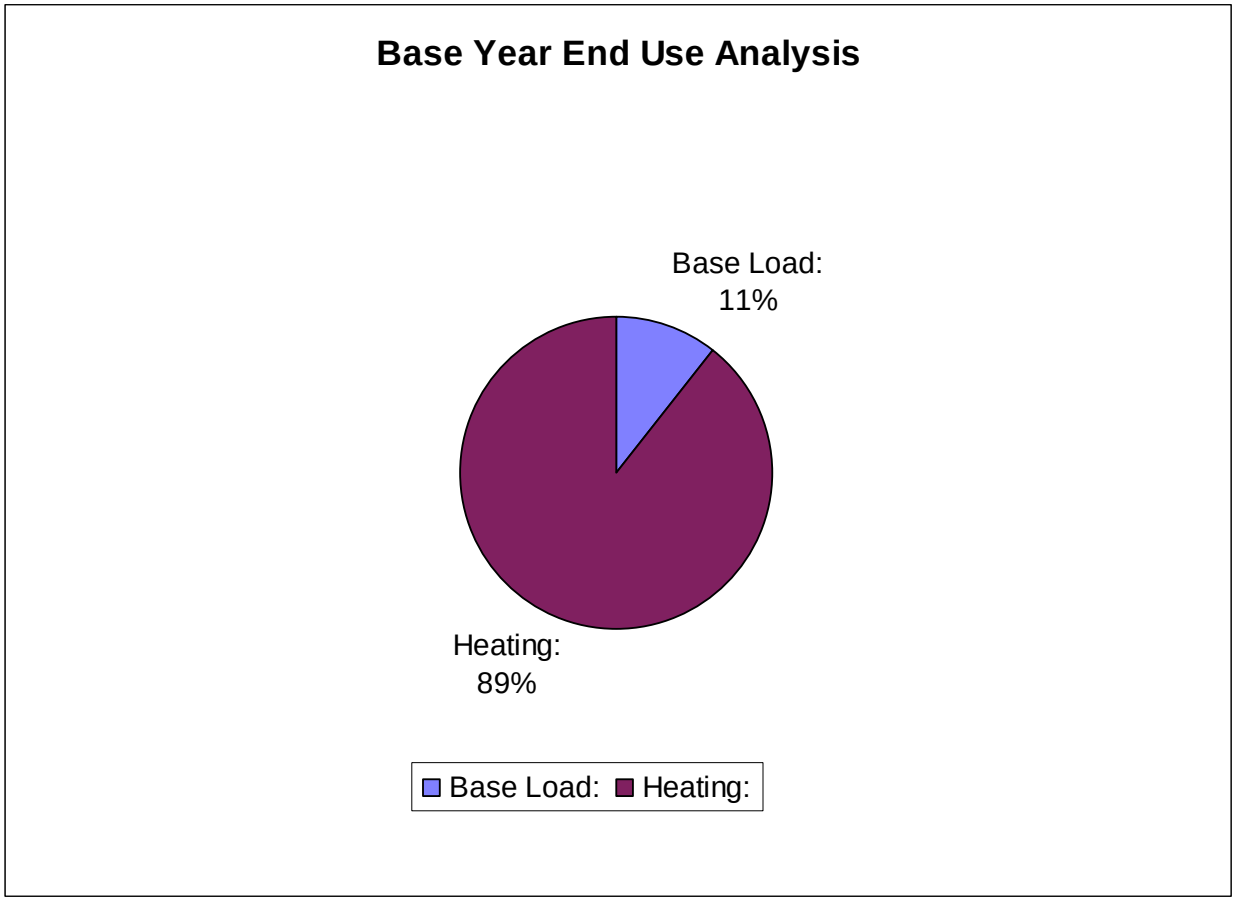

Task	MMBtu	Fraction
Base Load Domestic Water Heating	464	11%
Heating	3,907	89%
Total	4,371	

Middle Park High School – modeled using Trane Trace 700
Electric Energy

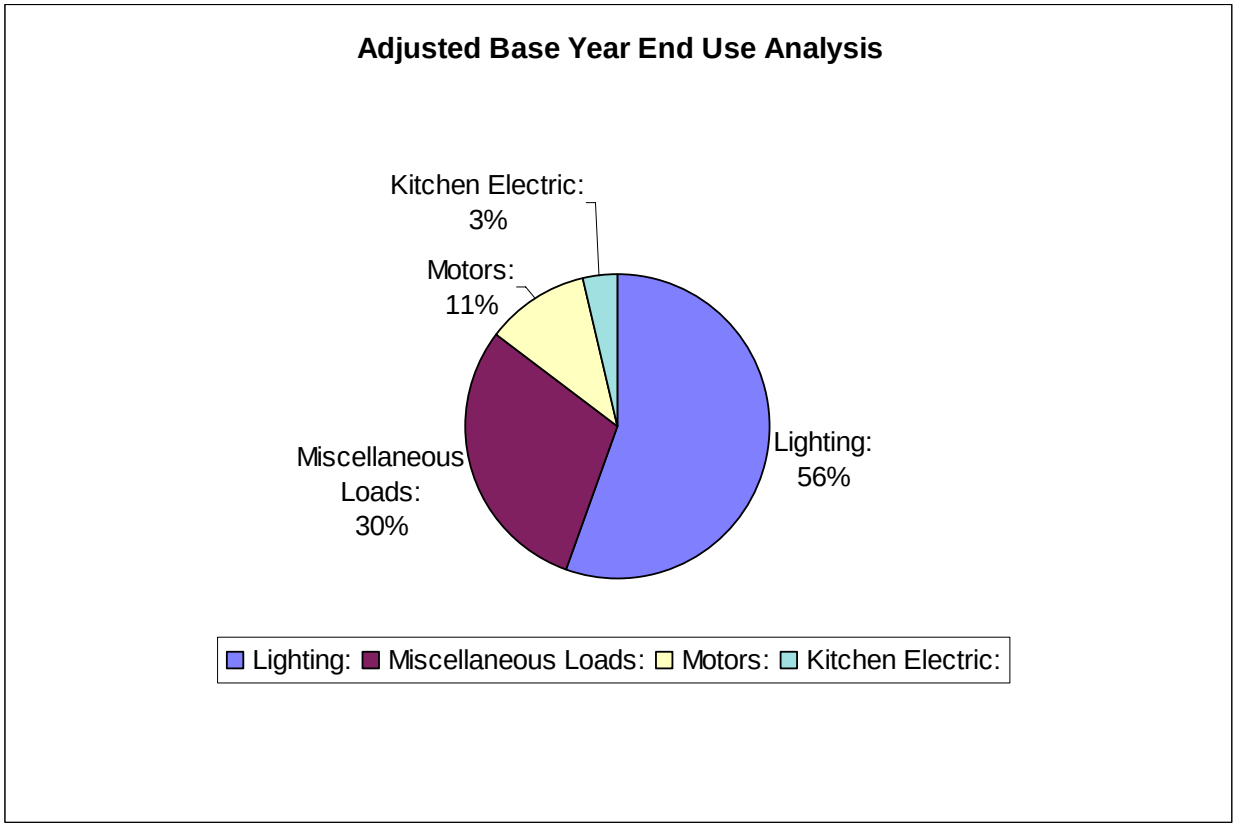

Task	kWh	Fraction
Lighting	531,528	56%
Miscellaneous Loads	284,177	30%
Motors	106,360	11%
Kitchen Electric	33,442	3%
Total	955,507	

Middle Park High School – modeled using Trane Trace 700
Fossil Fuel

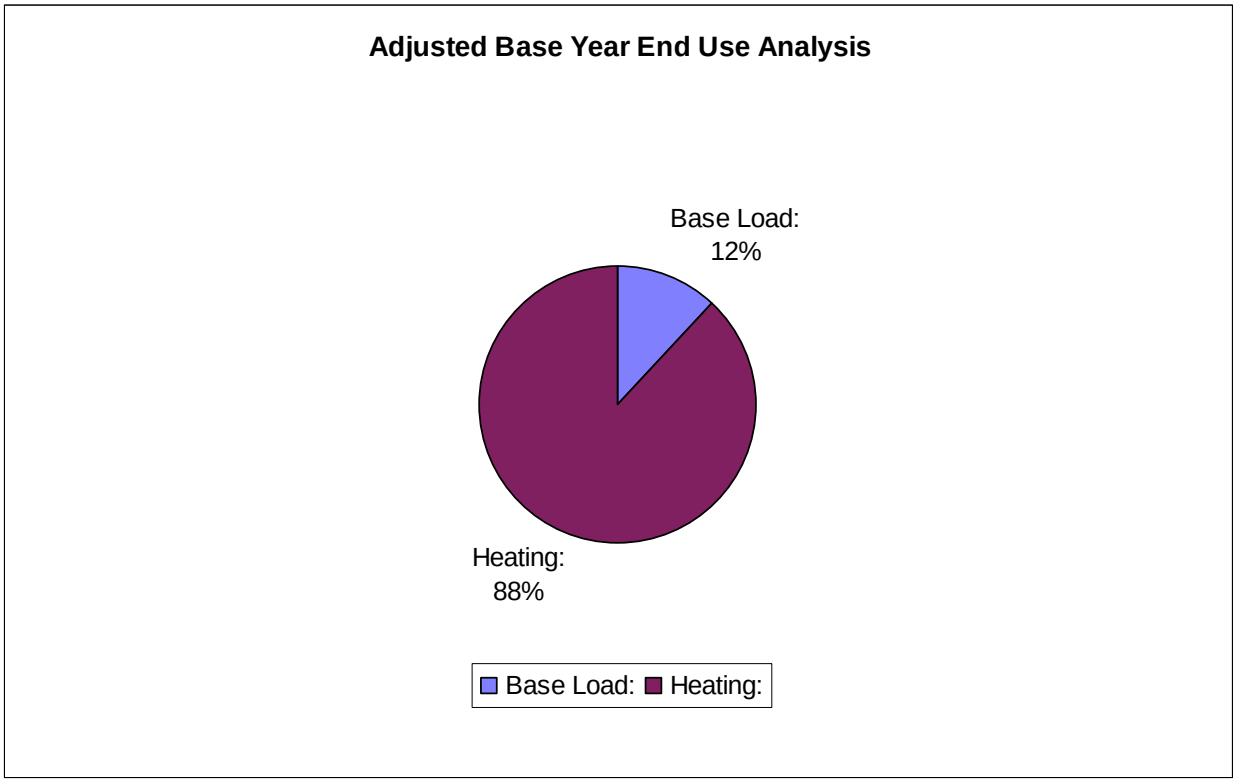

Task	MMBtu	Fraction
Base Load Domestic Water Heating	604	12%
Heating	4,503	88%
Total	5,107	

East Grand Middle School modeled using Trane Trace 700
Electric Energy

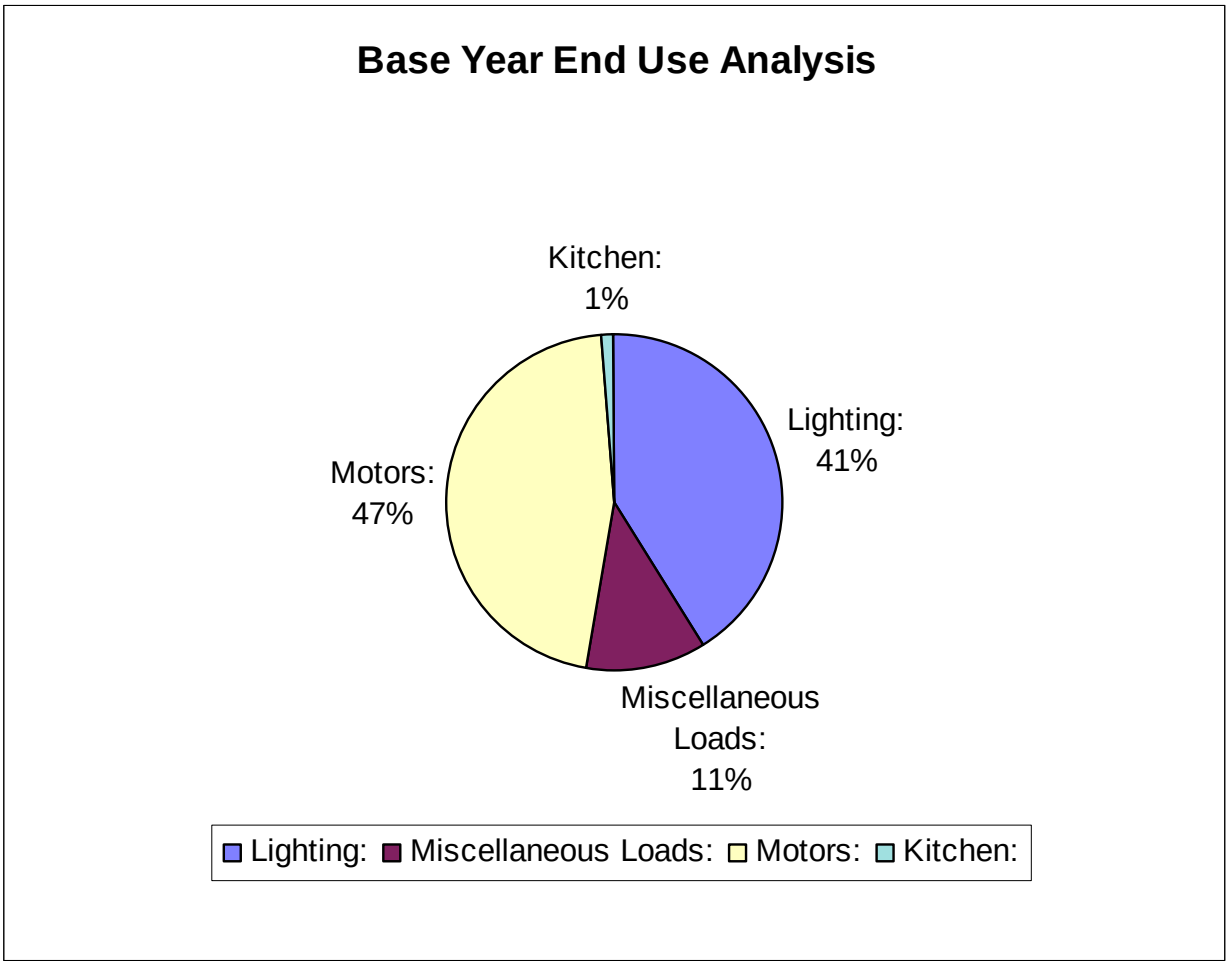

Task	kWh	Fraction
Lighting	344,540	41%
Miscellaneous Loads	96,393	11%
Motors	390,047	47%
Kitchen Electric	9,089	1%
Total	955,507	

East Grand Middle School modeled using Trane Trace 700
Fossil Fuel

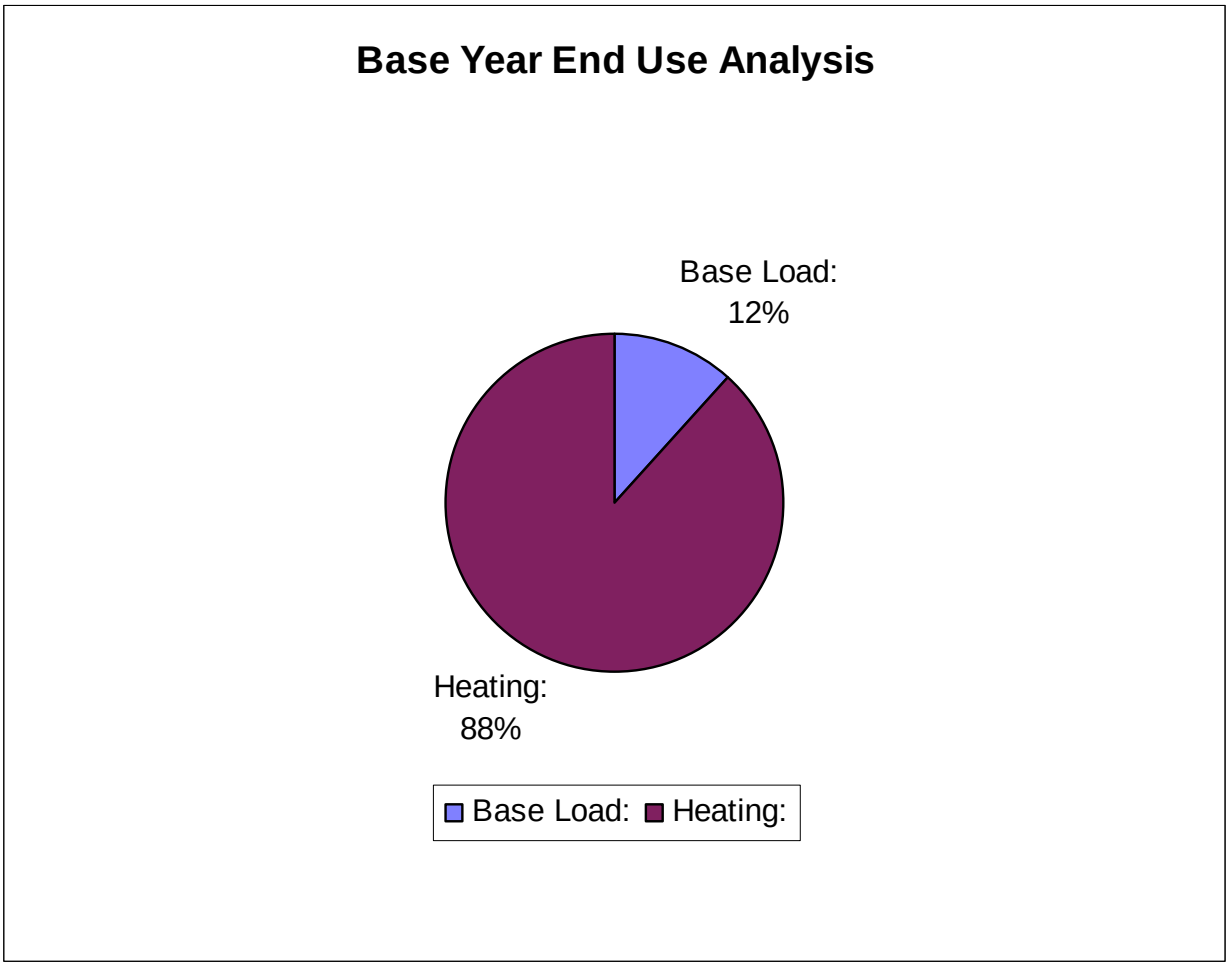

Task	MMBtu	Fraction
Base Load Domestic Water Heating	613	12%
Heating	4,652	88%
Total	5,265	

East Grand Middle School modeled using Trane Trace 700
Fossil Fuel

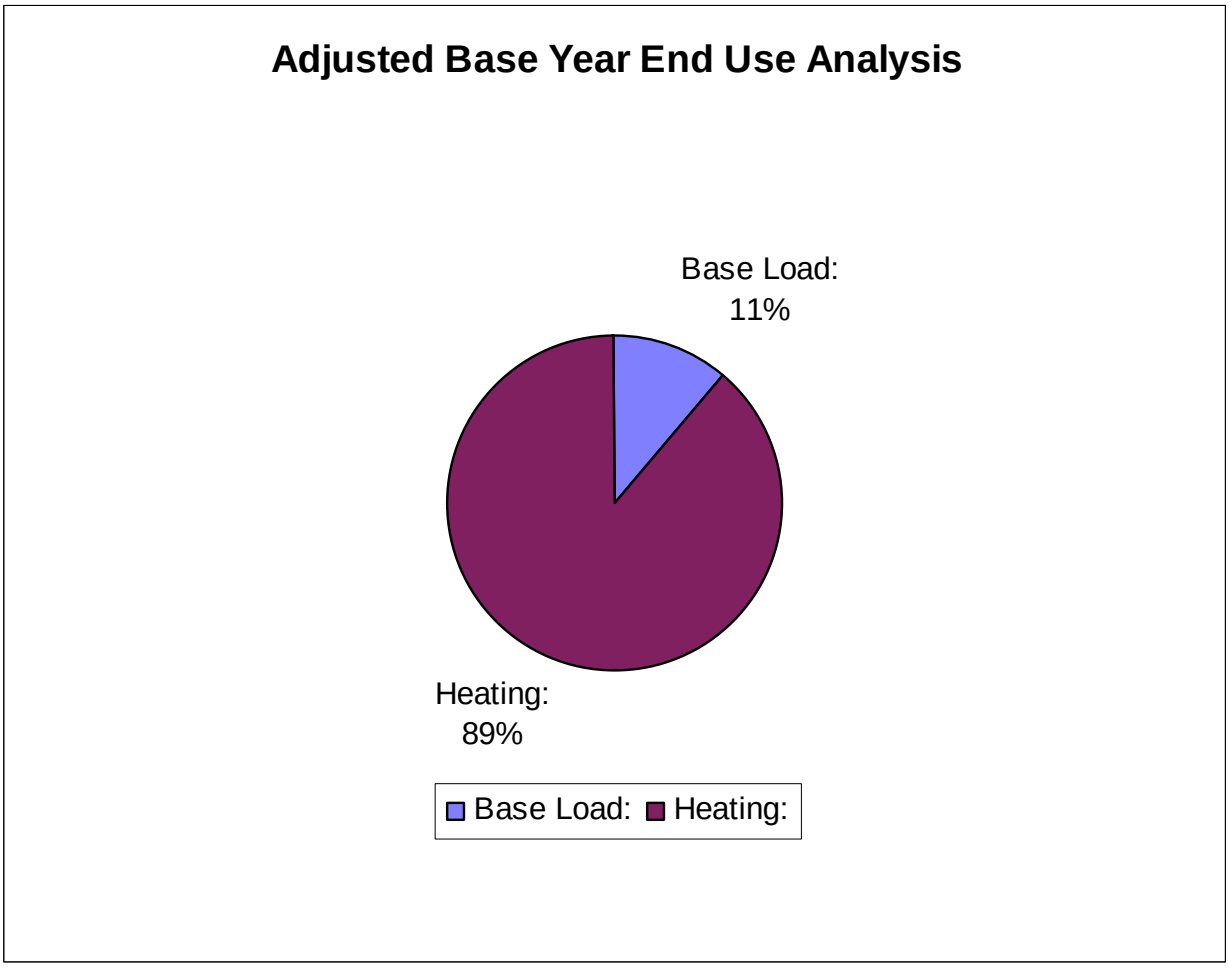

Task	MMBtu	Fraction
Base Load Domestic Water Heating	613	11%
Heating	4,802	89%
Total	5,415	

Fraser Valley Elementary School modeled using Trane Trace 700
Electric Energy

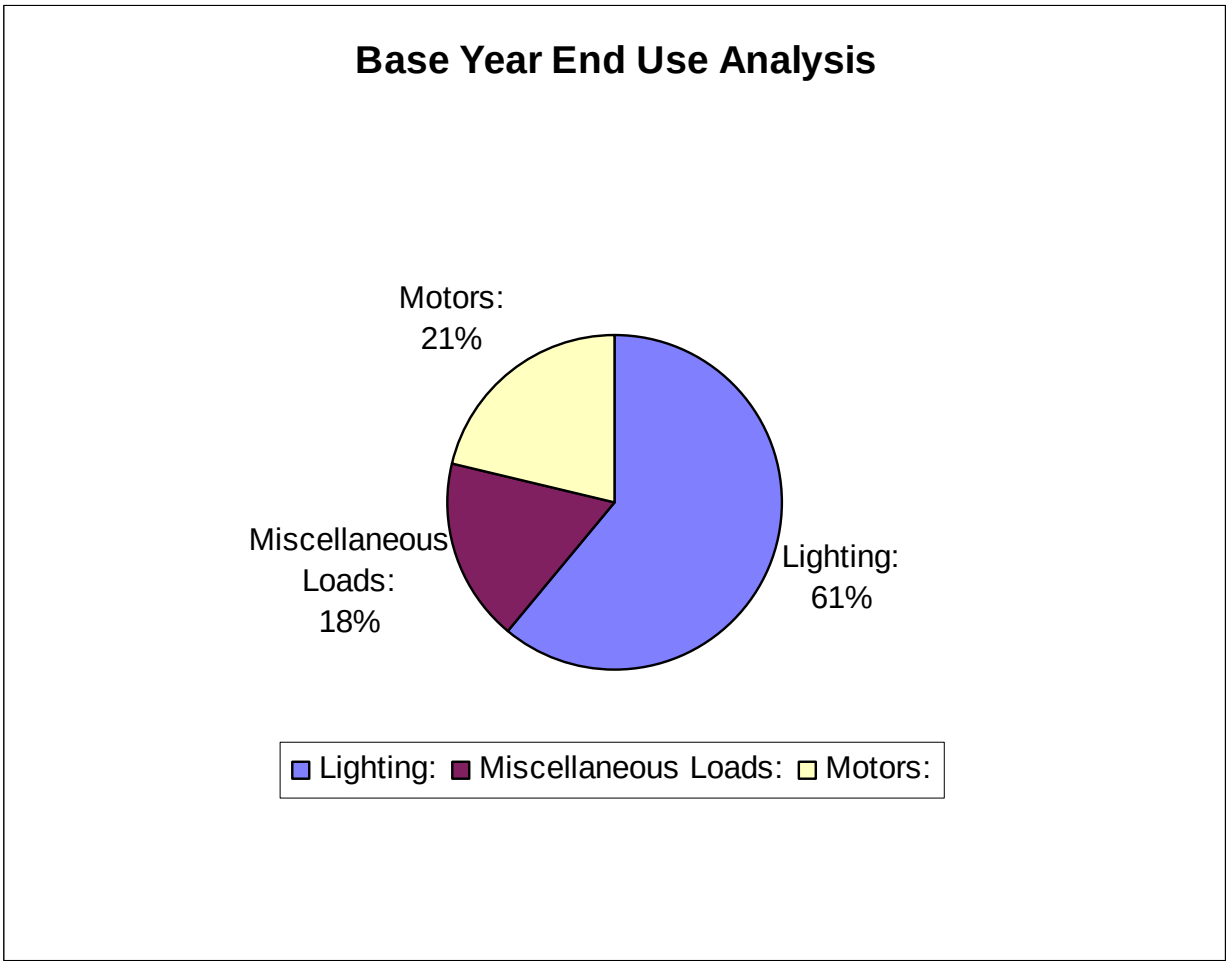

Task	kWh	Fraction
Lighting	264,536	61%
Miscellaneous Loads	76,605	18%
Motors	92,486	21%
Total	433,627	

Fraser Valley Elementary School modeled using Trane Trace 700
Fossil Fuel

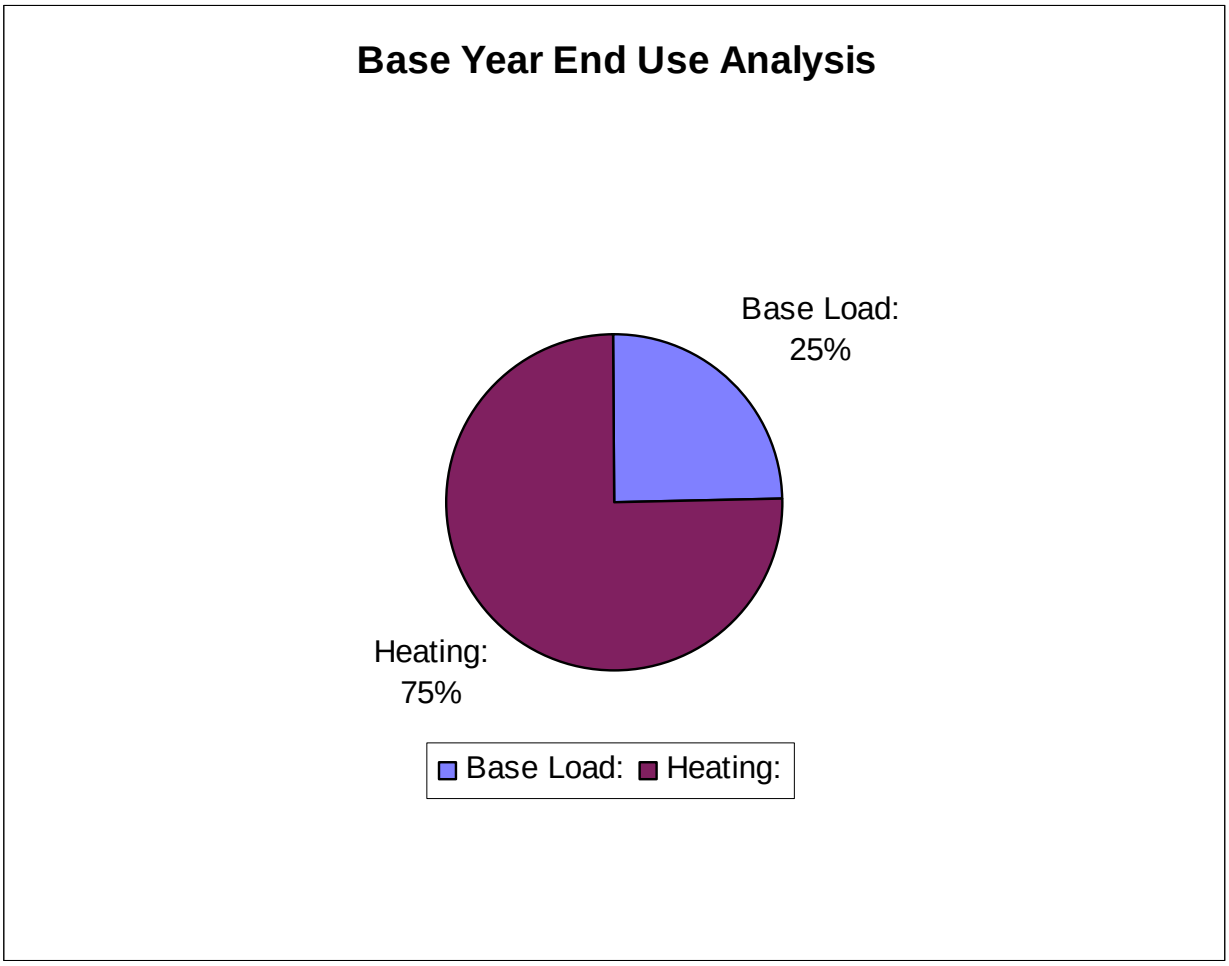

Task	MMBtu	Fraction
Base Load Domestic Water Heating	832	25%
Heating	2,549	75%
Total	3,381	

Fraser Valley Elementary School modeled using Trane Trace 700
Electric Energy

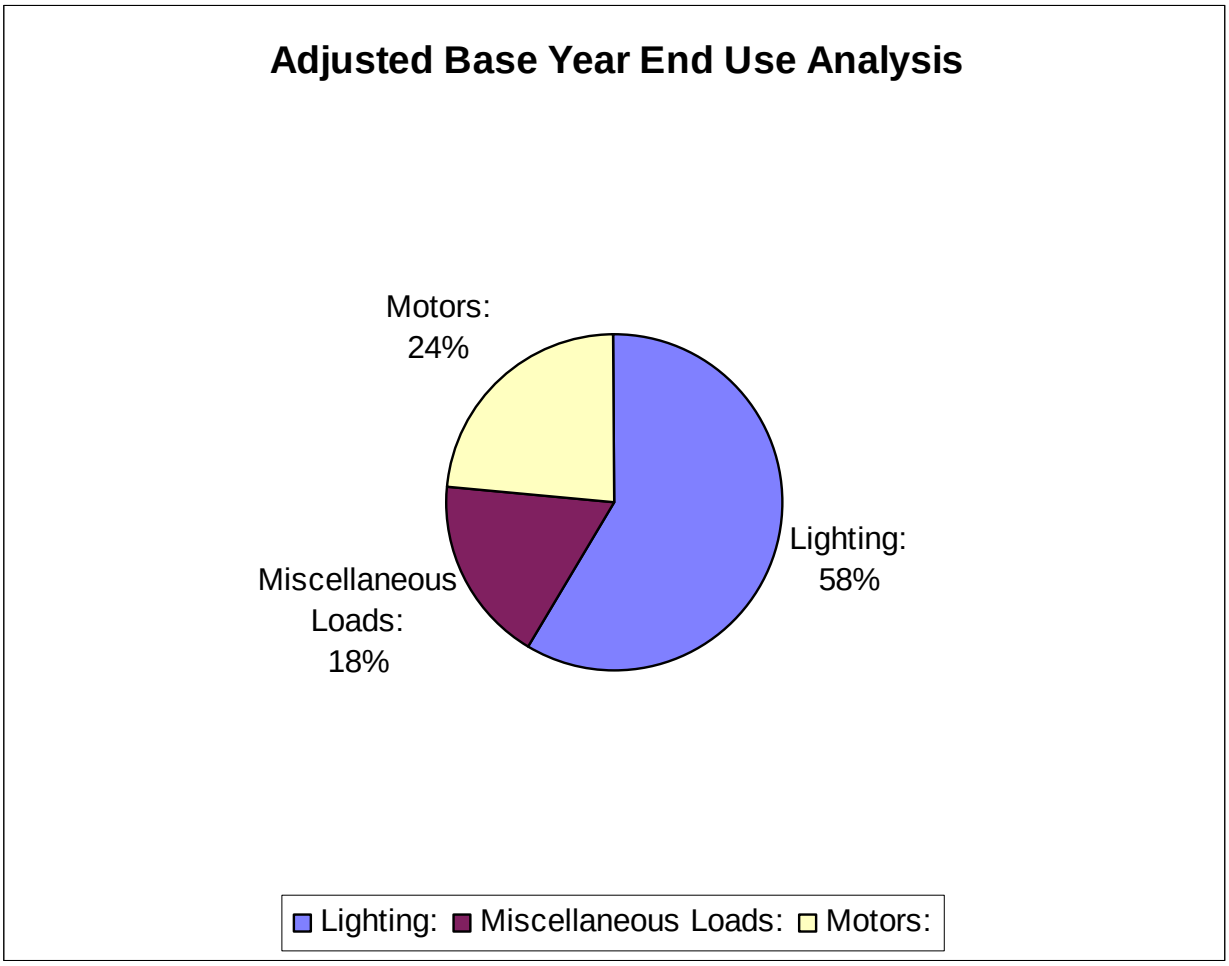

Task	kWh	Fraction
Lighting	314,078	58%
Miscellaneous Loads	95,659	18%
Motors	127,556	24%
Total	537,293	

Fraser Valley Elementary School modeled using Trane Trace 700
Fossil Fuel

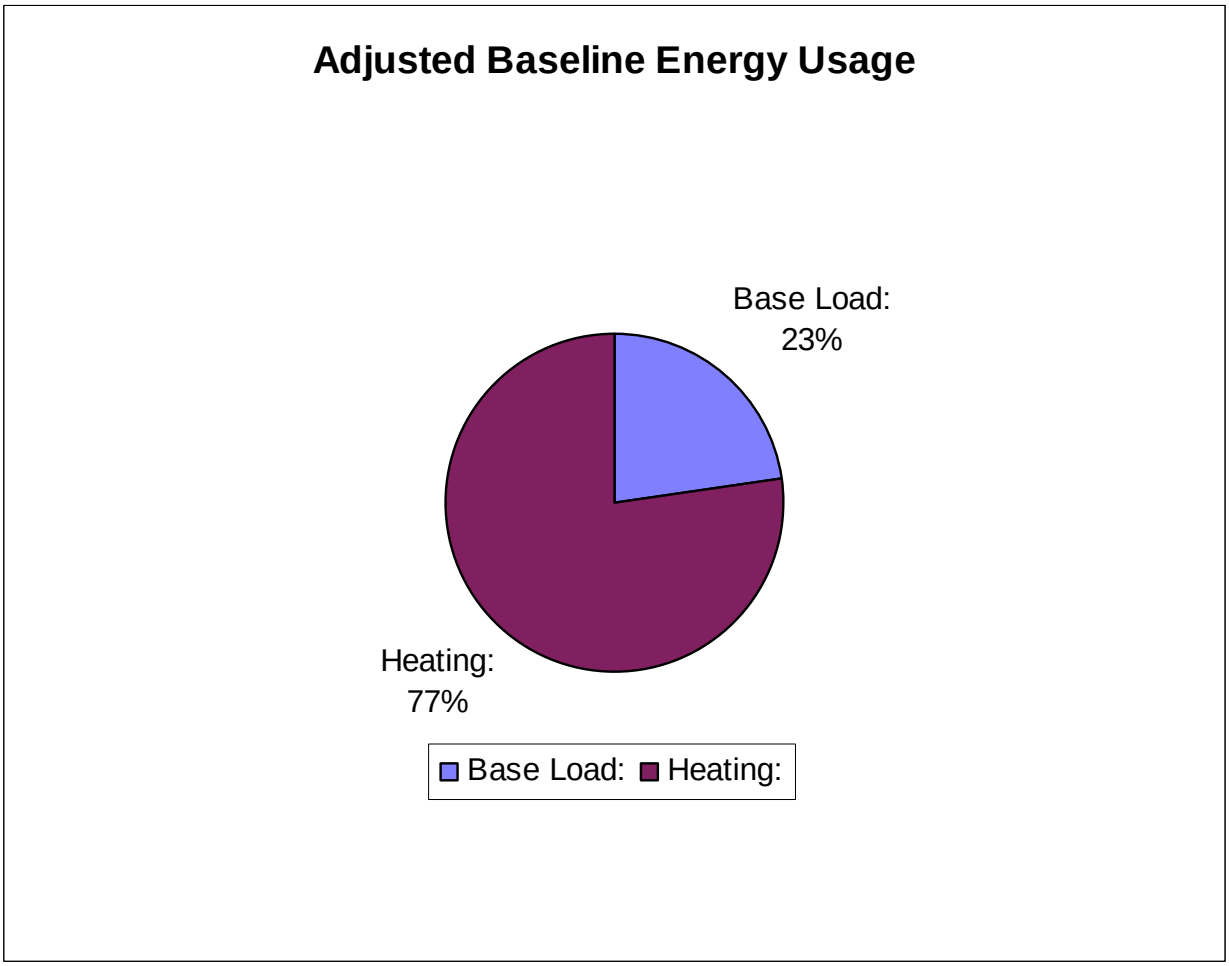

Task	MMBtu	Fraction
Base Load Domestic Water Heating	832	23%
Heating	2,820	77%
Total	3,652	

Granby Elementary School
Electric Energy

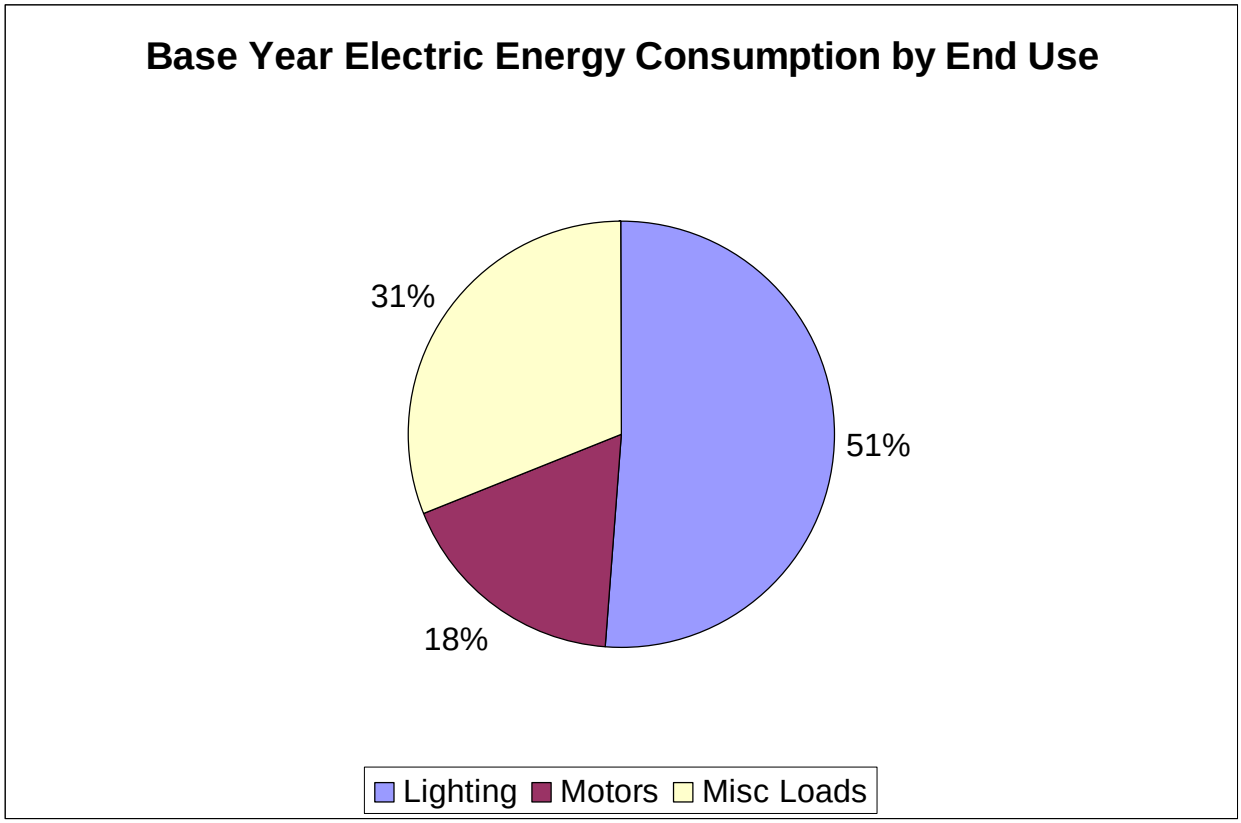

Task	kWh	Fraction
Lighting	137,411	51%
Miscellaneous Loads	83,641	31%
Motors	47,795	18%
Total	268,847	

Granby Elementary School
Fossil Fuel

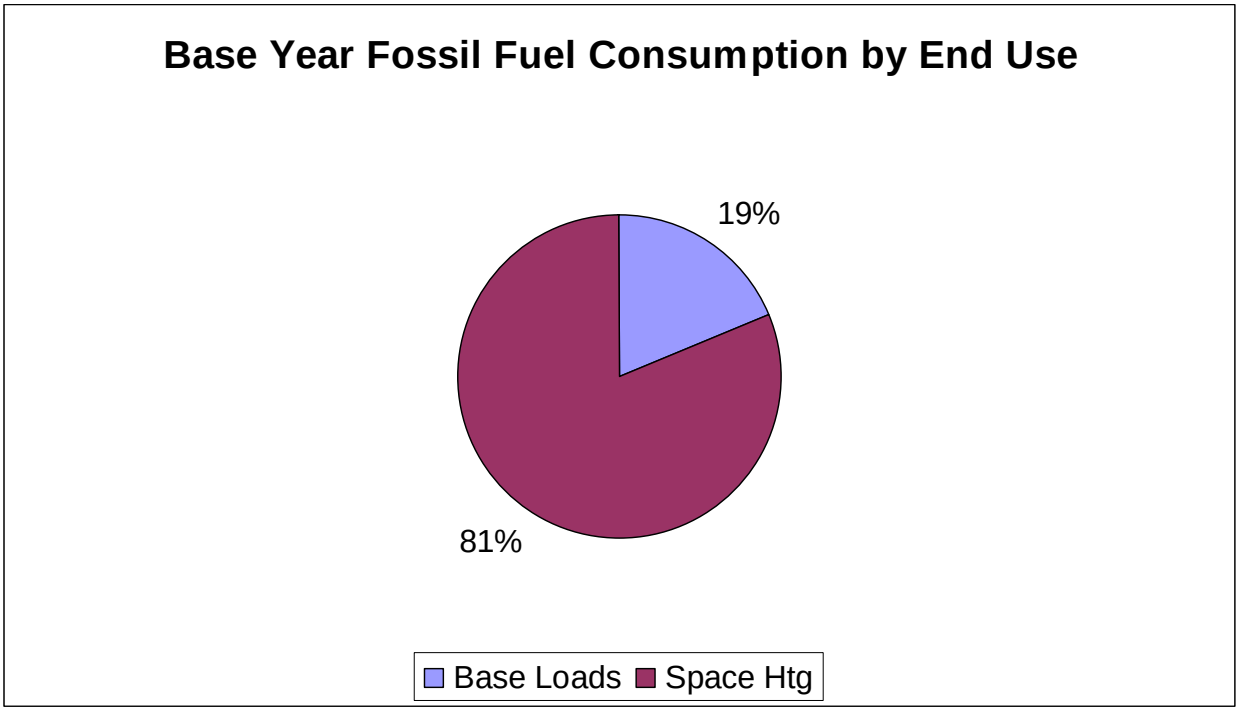

Task	MMBtu	Fraction
Base Load Domestic Water Heating	380	19%
Heating	1,639	81%
Total	2,019	

Grand Lake Elementary School
Electric Energy

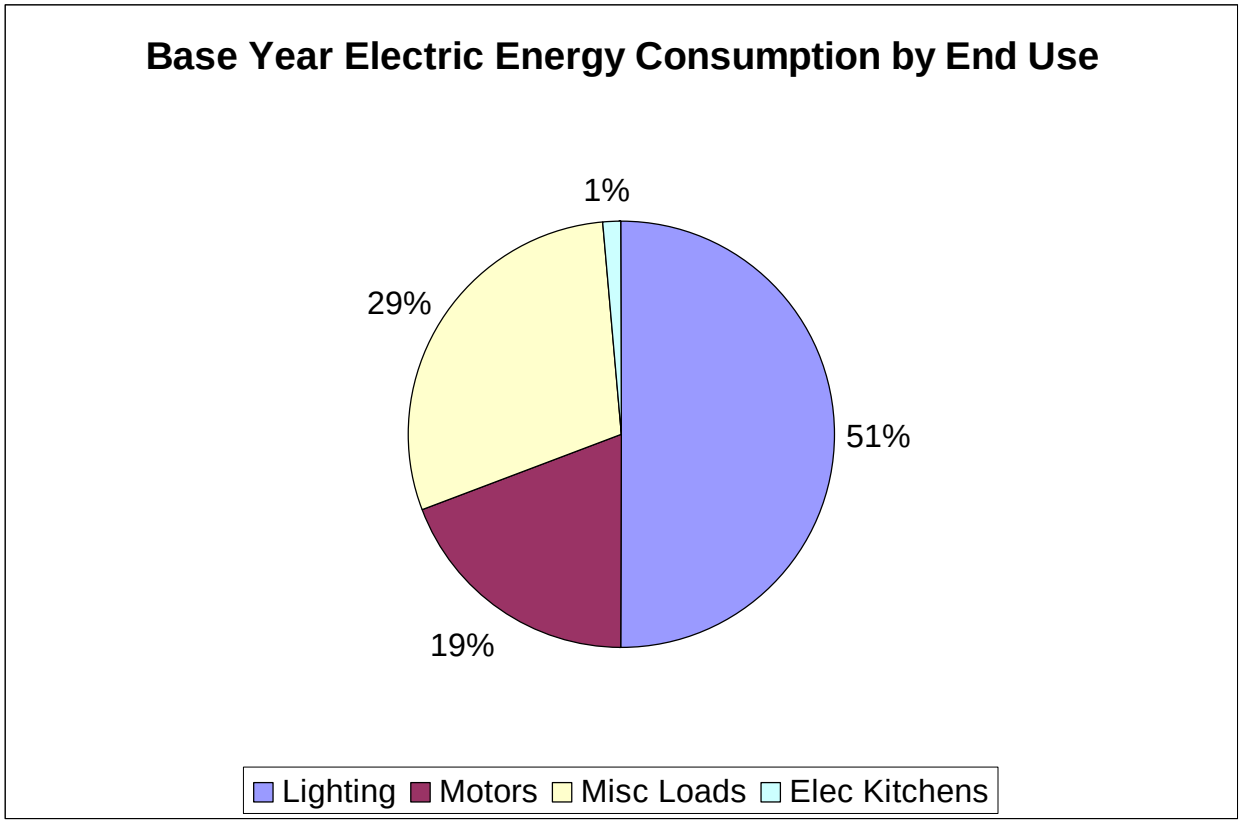

Task	kWh	Fraction
Lighting	63,475	51%
Miscellaneous Loads	37,310	29%
Motors	24,227	19%
Kitchen Electric	1,800	1%
Total	126,812	

Grand Lake Elementary School
Fossil Fuel

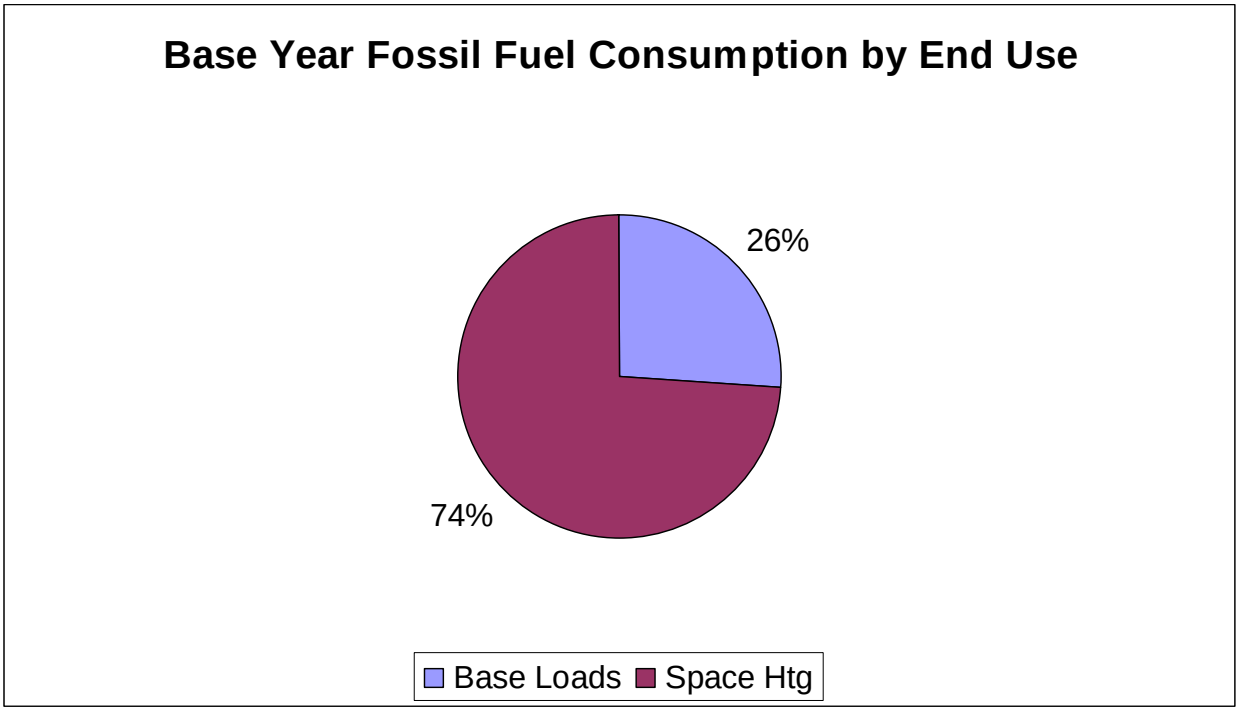

Task	MMBtu	Fraction
Base Load Domestic Water Heating	336	26%
Heating	955	74%
Total	1,291	

Indian Peaks Charter School modeled using Trane Trace 700
Electric Energy

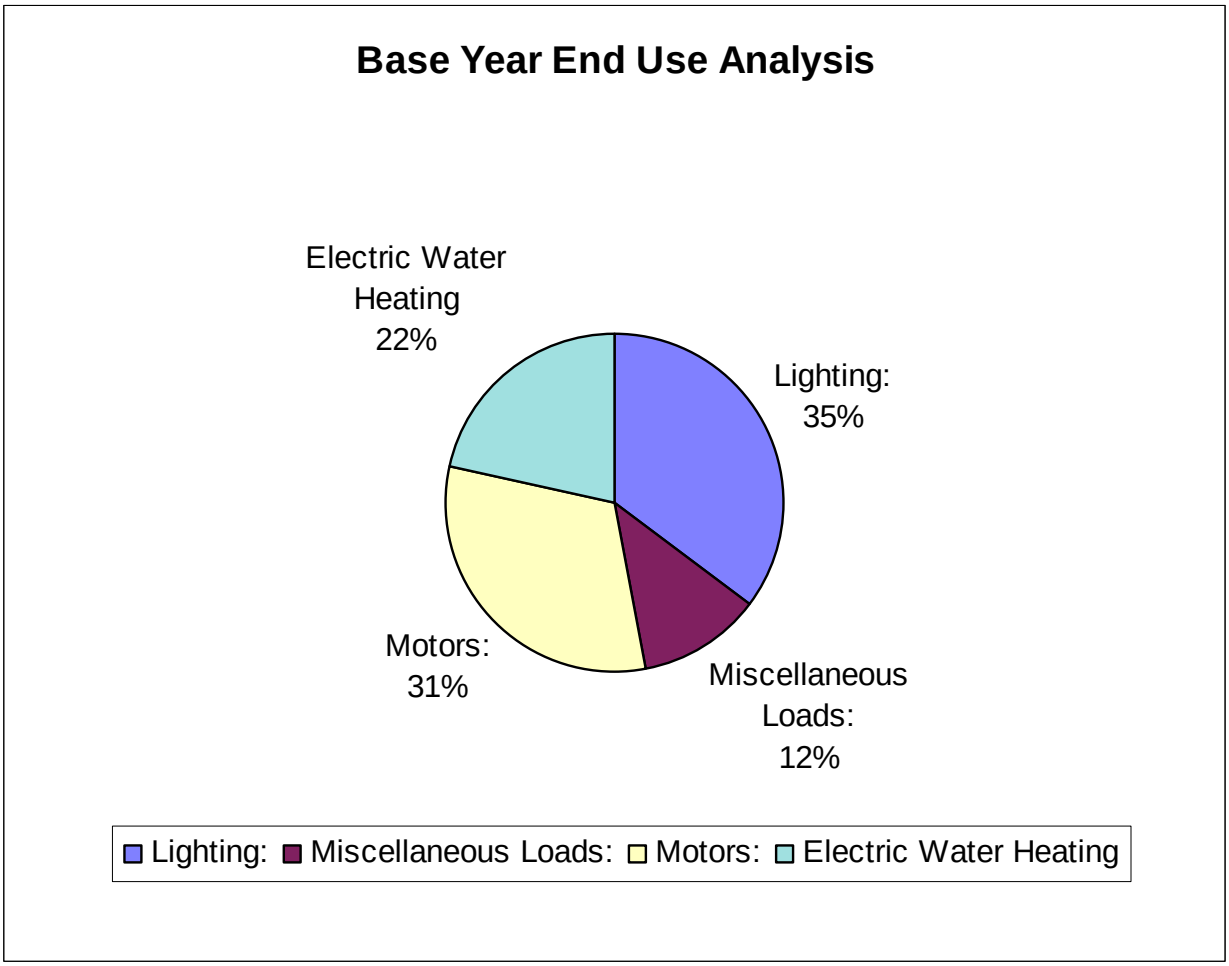

Task	kWh	Fraction
Lighting	18,423	35%
Miscellaneous Loads	6,141	12%
Motors	16,298	31%
Electric Water Heating	11,368	22%
Total	52,230	

Indian Peaks Charter School modeled using Trane Trace 700
Fossil Fuel

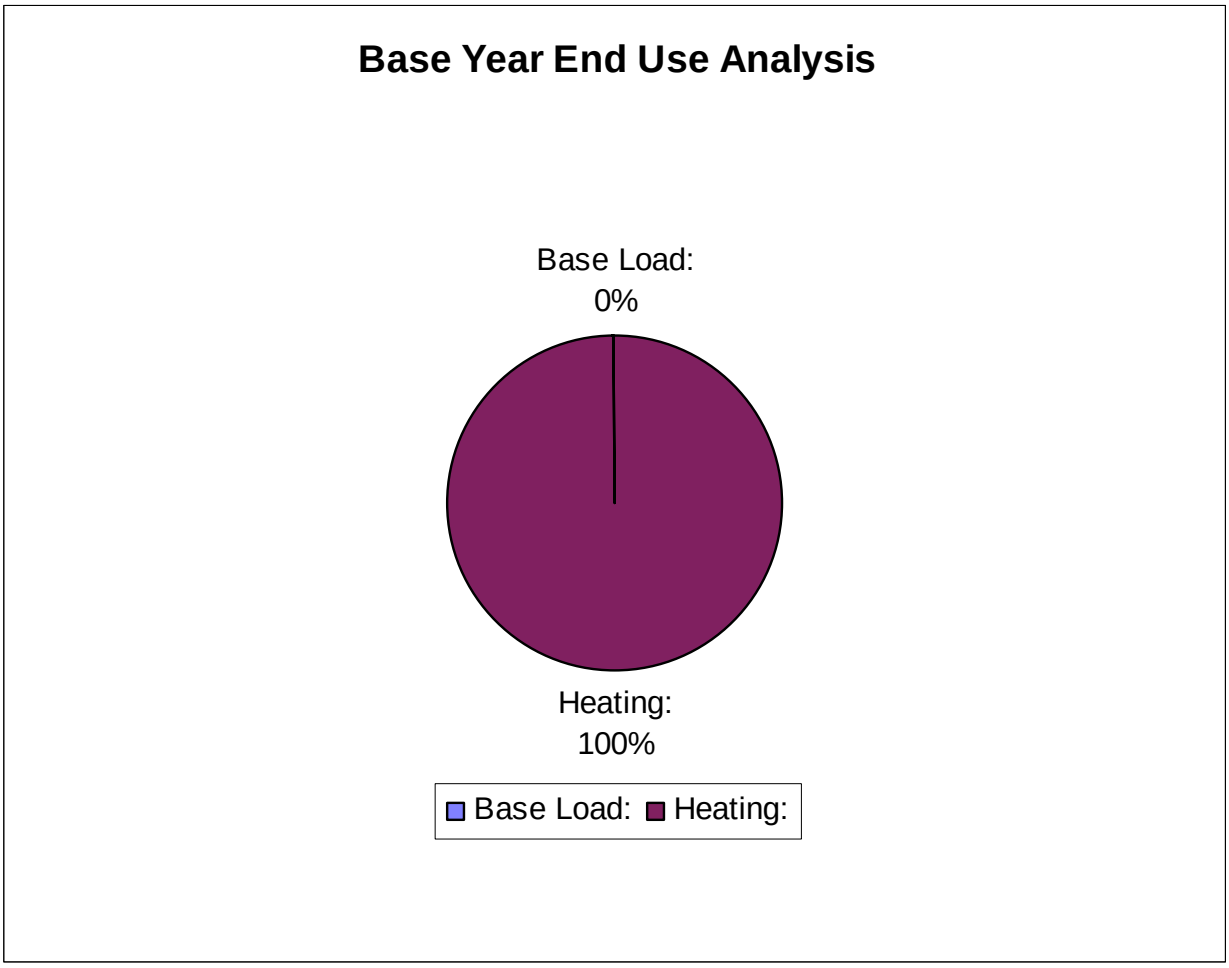

Task	MMBtu	Fraction
Base Load Domestic Water Heating	0	0%
Heating	267	100%
Total	267	

Indian Peaks Charter School modeled using Trane Trace 700
Electric Energy

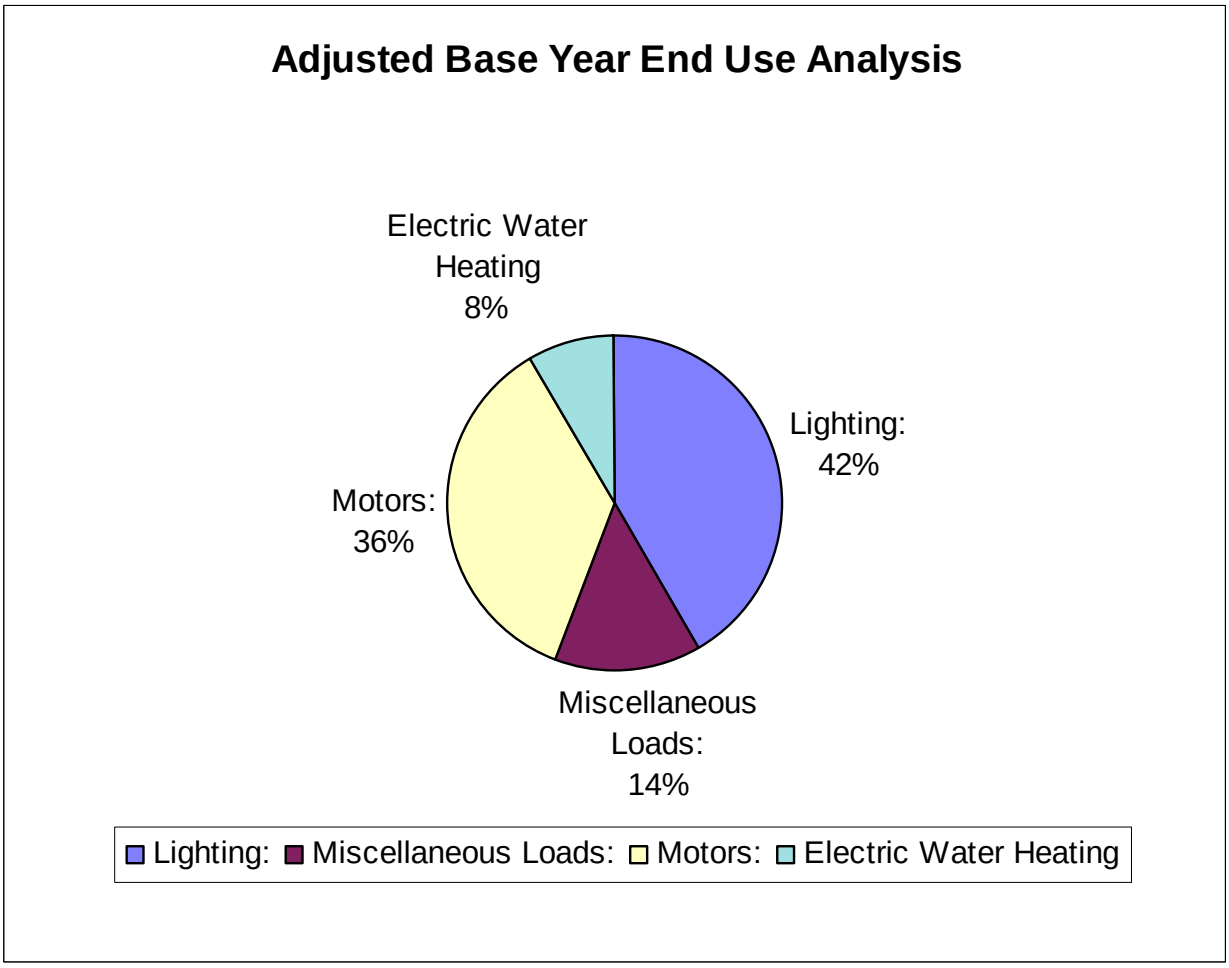

Task	kWh	Fraction
Lighting	56,804	42%
Miscellaneous Loads	18,953	14%
Motors	48,933	36%
Electric Water Heating	11,368	8%
Total	136,058	

Indian Peaks Charter School modeled using Trane Trace 700
Fossil Fuel

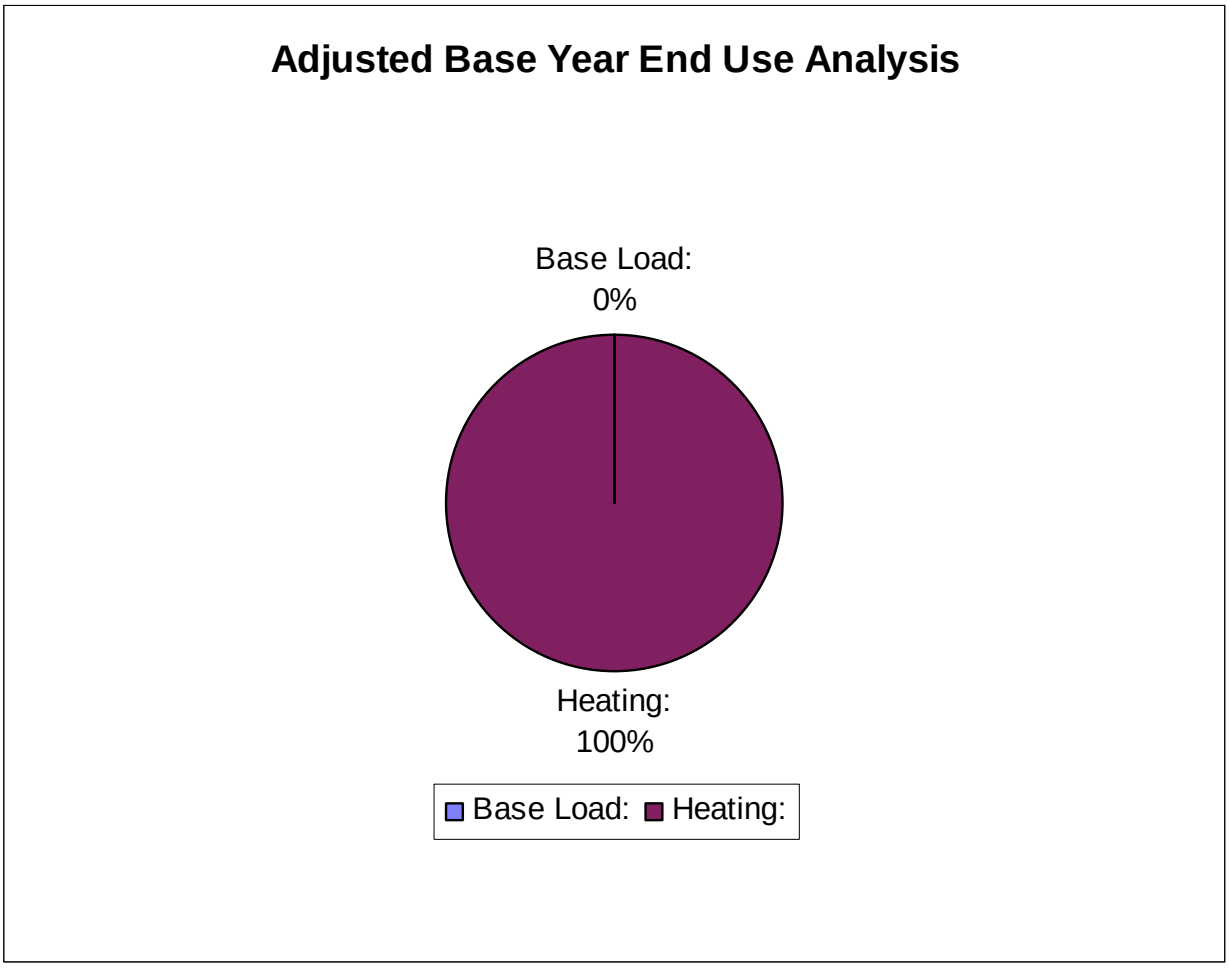

Task	MMBtu	Fraction
Base Load Domestic Water Heating	0	0%
Heating	486	100%
Total	486	

District Office modeled using Trane Trace 700
Electric Energy

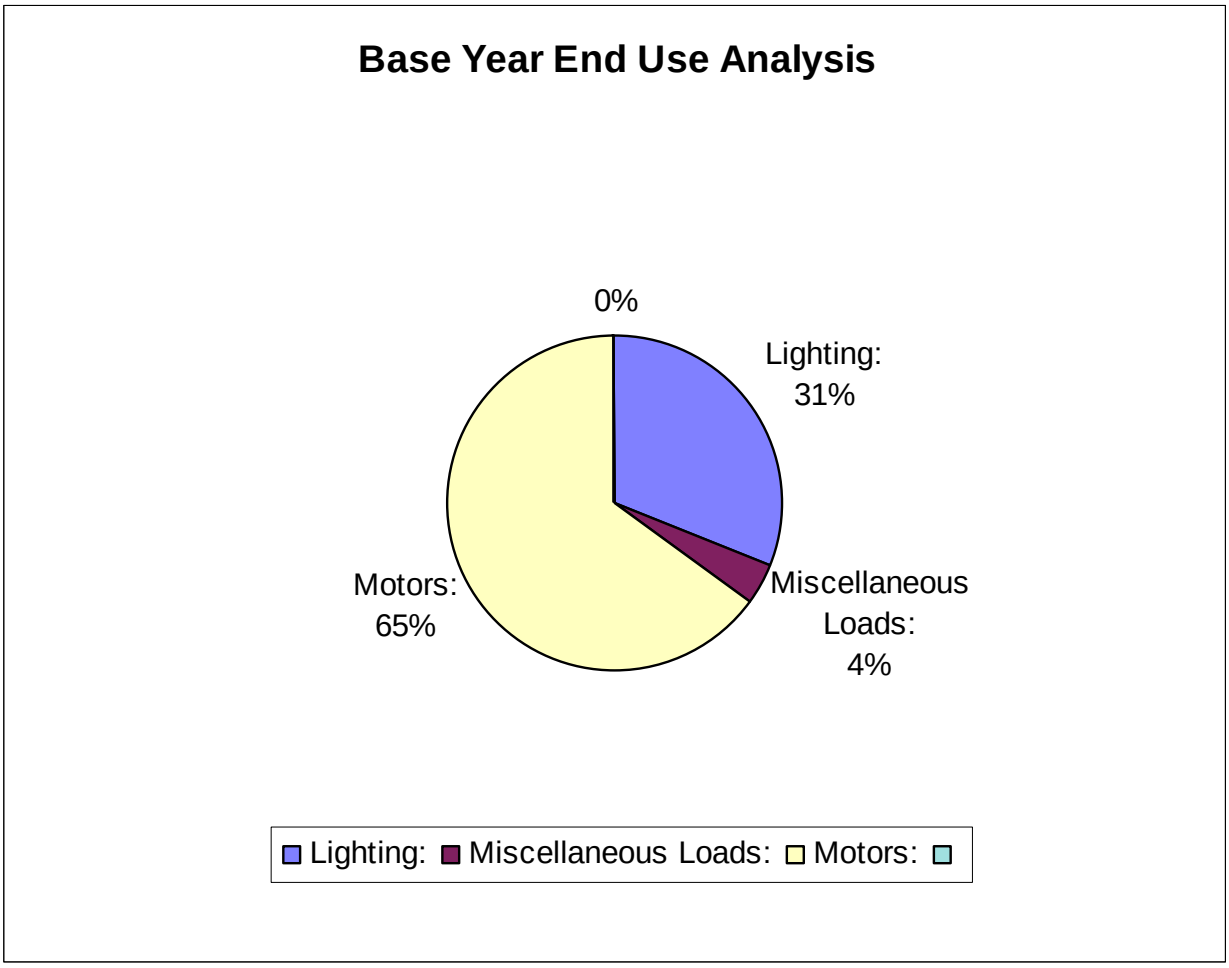

Task	kWh	Fraction
Lighting	61,951	31%
Miscellaneous Loads	2,477	4%
Motors	40,286	65%
Total	104,714	

District Office modeled using Trane Trace 700
Fossil Fuel

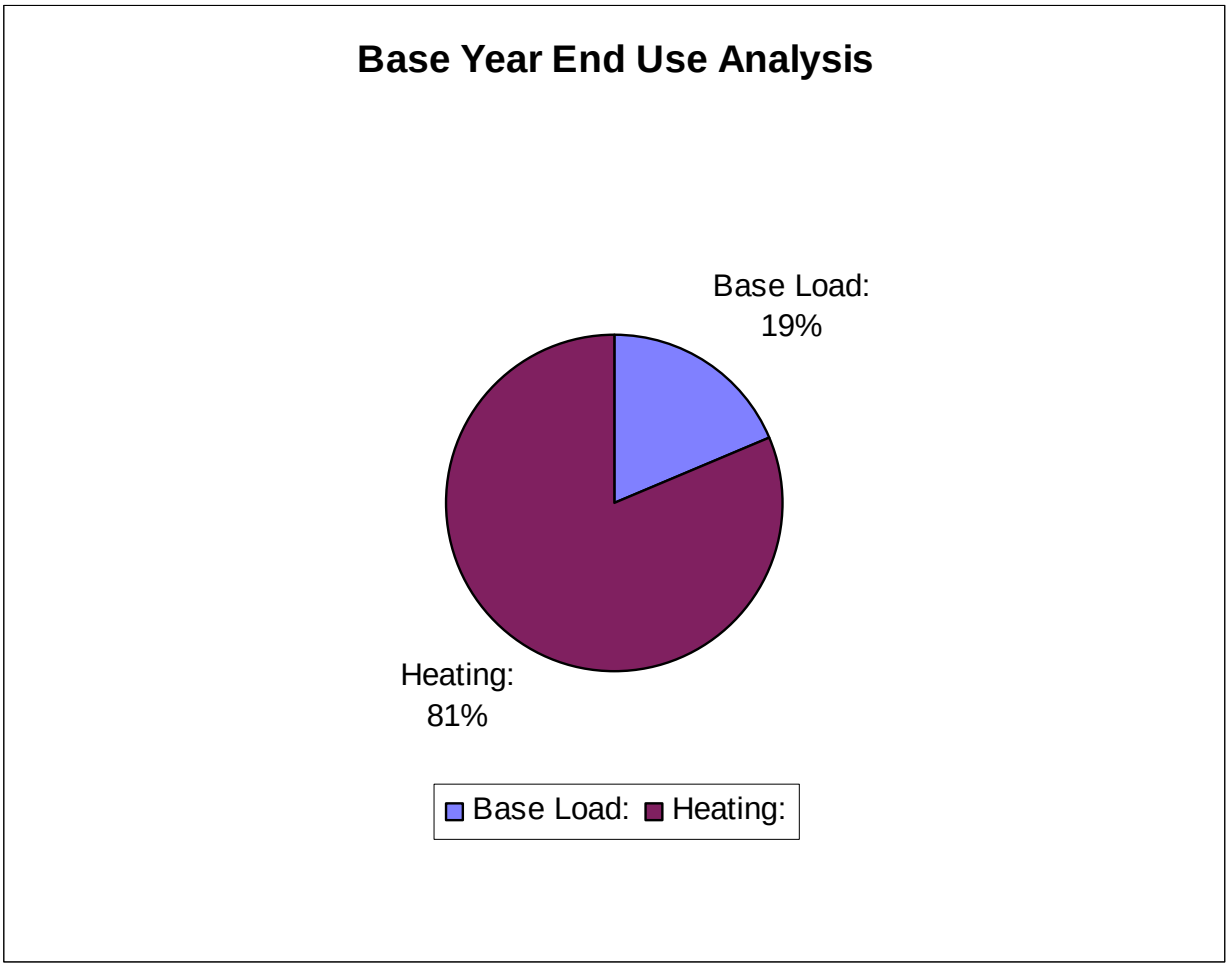

Task	MMBtu	Fraction
Base Load Domestic Water Heating	131	19%
Heating	559	81%
Total	690	

Transportation Facility
Electric Energy

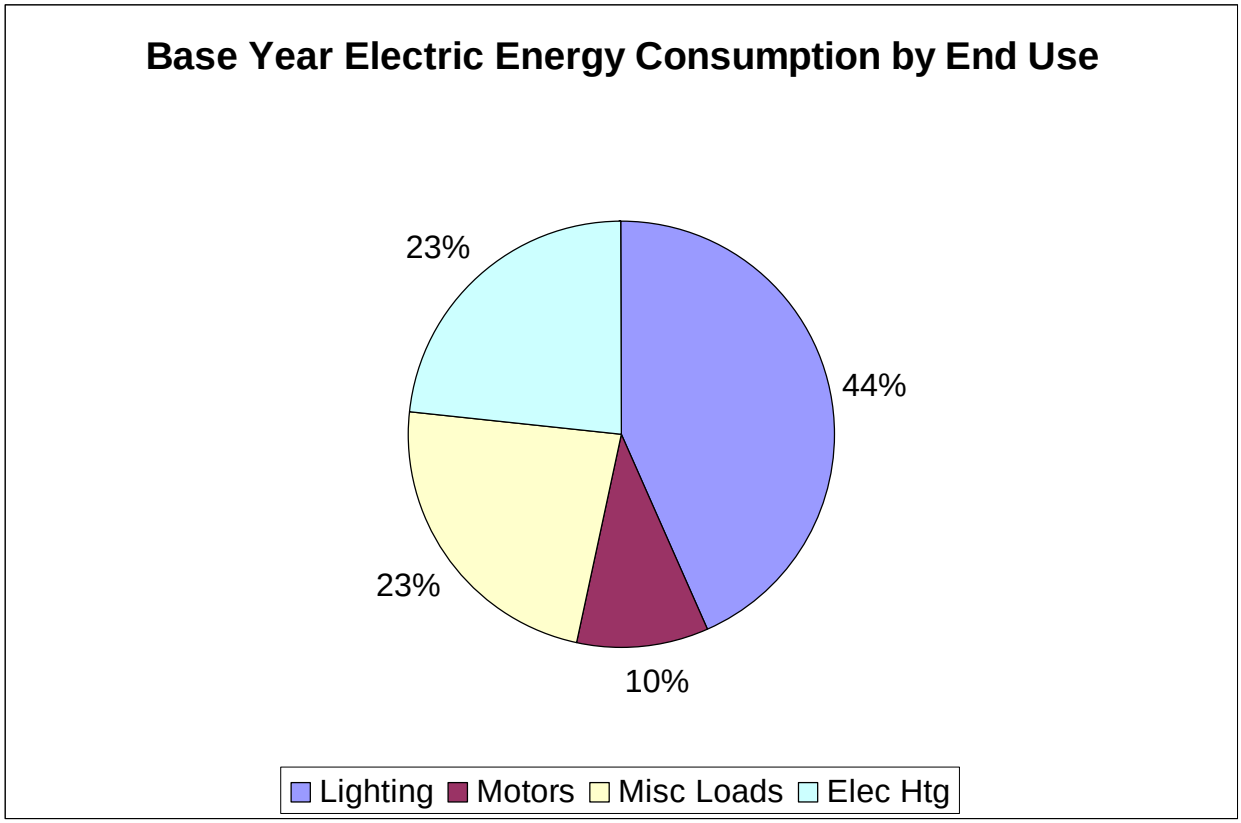

Task	kWh	Fraction
Lighting	30,488	44%
Miscellaneous Loads	16,416	23%
Motors	7,036	10%
Electric Heating	16,500	23%
Total	70,440	

Transportation Facility
Fossil Fuel

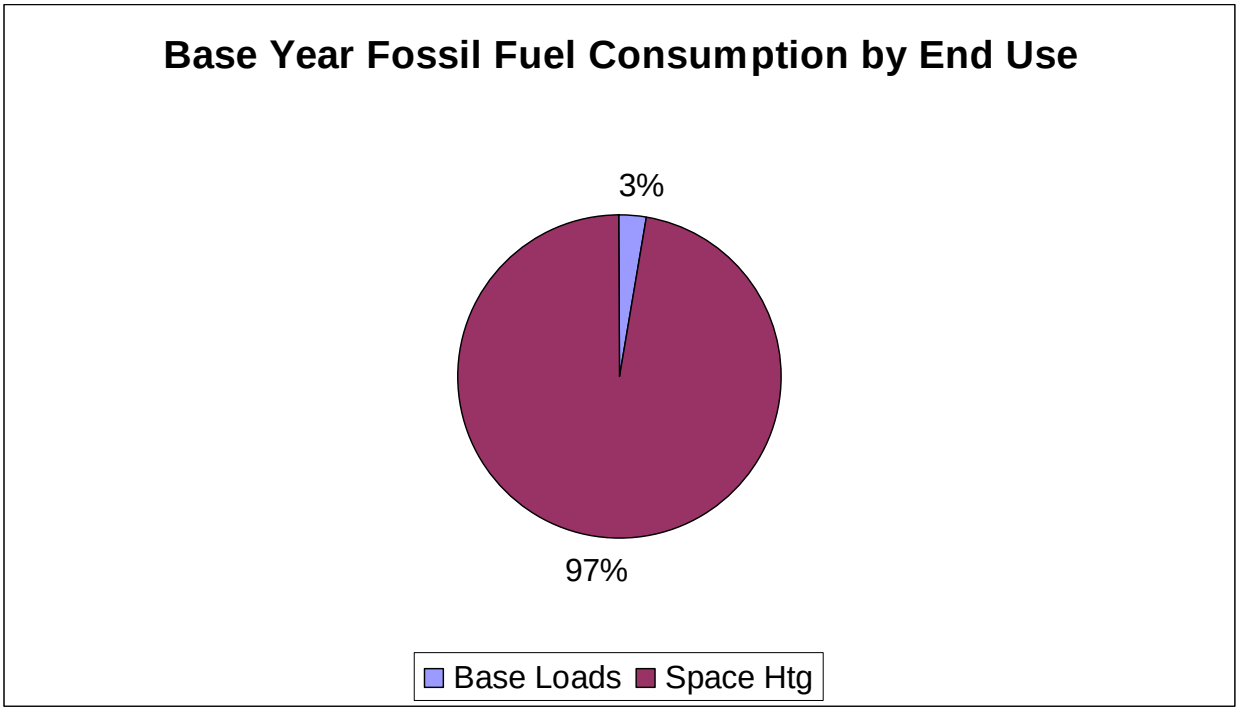

Task	MMBtu	Fraction
Base Load Domestic Water Heating	48	3%
Heating	1,771	97%
Total	1,819	

F. MEASUREMENT AND VERIFICATION REPORT

Honeywell

Americas M&V Services

East Grand School District RE-2

Phase 2

Energy Cost Avoidance Review

Audit Year 2

July 2011 through June 2012

Helping customers manage energy resources to improve financial performance.

< Blank Page >

Table of Contents

East Grand School District #2

1.0 Overview & Executive Summary 5

Program Overview 7
Retrofit Highlights 8
Executive Summary 9
Project Scope Summary 10
M&V Methodology Overview 17
M&V Methodology Sampling Plan 19
Utility Cost Rate Summary 21

2.0 Detail Summaries 23

Energy Cost Avoidance Summary 25
O&M Cost Avoidance Summary 26
Cumulative Cost Avoidance Summary 28
Standards of Comfort Summary 29

3.0 Savings Calculations 31

ECM 1.1 - Boiler Plant Upgrades 33
ECM 3.1 - Control System Upgrades 37
ECM 5.1 - Lighting Retrofit 77
ECM 6.1 - Weatherization (Windows/Doors) 111
ECM 8.1 - Variable Frequency Drives (VFDs) 113

< Blank Page >

Report Section 1.0
Overview & Executive Summary

Program Overview 7

Retrofit Highlights 8

Executive Summary 9

Project Scope Summary 10

M&V Methodology Overview 17

M&V Methodology Sampling Plan 19

Utility Cost Rate Summary 21

< Blank Page >

Program Overview

Audit Year 2

Energy Analysis Services

Honeywell is pleased to provide this comprehensive report of your energy cost savings/ avoidance for the report period listed below. Honeywell provides a whole array of products, services and programs to conserve energy and increase the operating efficiency of your buildings.

Agreement Number:	423-10980
Baseline Period:	December 2006 - November 2008 (Averaged to 1 Year)
Report Period:	July 2011 through June 2012
Guarantee Term:	20 Years
Report Preparation By:	Honeywell Americas M&V Services Thayer F. Hussey, MVS
Site Visit Inspection Date:	June 11, 2012

Contact Information

East Grand School District RE-2

Superintendent
Nancy Karas
299 County Road 611 / PO Box 125
Granby, CO 80446
Phone: 970-887-2581
nkaras@egsd.org

Director of Maintenance/Facilities
John Weninger
299 County Road 611 / PO Box 125
Granby, CO 80446
Phone: 970-887-2581
jweninger@egsd.org

Honeywell Personnel

Honeywell M&V Contact, Service
Thayer F. Hussey, CEM, CMVP, CEP, CSDP
M&V Specialist
3307 56th St.
Lubbock, TX 79413-4812
Phone: 806-784-0044
thayer.hussey@honeywell.com

Honeywell Performance Contracting Consultant
Gary Berngard
Cell: 303-589-5219
gary.berngard@honeywell.com

Honeywell Account Manager for EGSD
Kevin Taylor
Cell: 720-289-7033
kevin.taylor@honeywell.com

Retrofit Highlights

ECM#	ECMs Implemented \ Facilities	Middle Park High School	East Grand Middle School	Fraser Valley Elementary School	Granby Elementary	Grand Lake Elementary School	Indian Peaks Charter School	District Offices/ Warehouse	Transportation
1.1	Boiler Plant Upgrades			Imprv		$			
3.1	Control System Upgrades	$	$	$	$	$	$	$	$
4.1	Unit Ventilator Upgrades			Imprv		Imprv			
4.2	Heat Recovery Unit Installation				Imprv			Imprv	
4.3	Furnace Installation							Imprv	
4.4	Condensing Unit Replacement							Imprv	
4.5	Gas-Fired Radiant Heater Installation							Imprv	
5.1	Lighting Fixture & Controls Retrofit	$	$	$	$	$	$	$	$
6.1	Window & Door Weatherization	$		$	$	$	$	$	
8.1	Variable Frequency Drives on AHU Fan Motors	$	$	$					
8.2	Domestic Cold Water Pump Replacement		Imprv						
12.1	Uninterruptible Power Supply Replacement			Imprv		Imprv			

$	• Indicates ECMs at Noted School Facilities that contribute to project Guaranteed Cost Avoidance/Savings.
Imprv	• Indicates ECMs at Noted School Facilities that were implemented for infrastructure improvement, and no Cost Avoidance/Savings are guaranteed or claimed. M&V Plan for these ECMs is to simply validate the associated equipment met installation specifications, that installation was completed per scope,and that the ECMs remain present and operational by annual visual inspection.

Executive Summary

Year 2

East Grand School District entered into an energy performance contract, also know as the "EPC" or the "contract", with Honeywell on August 6th, 2009 to address needed upgrades to facilities that the District required while using the guaranteed cost avoidance/savings generated by the project energy conservation measures (ECMs) to repay the cost of implementing the improvements over time.

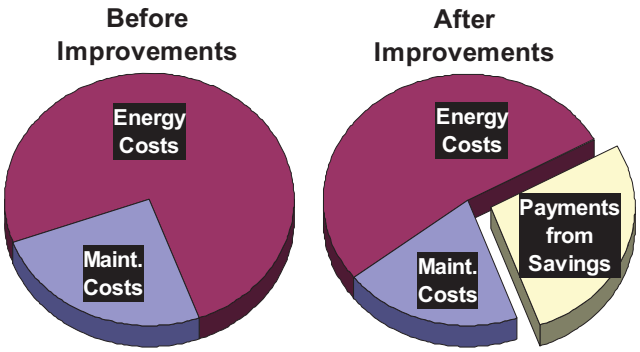

The purpose of this report is to present Actual versus Guaranteed Cost Avoidance/Savings figures for Audit Year 2 (July 2011 through June 2012) of the 20-year post-installation performance period. We are pleased to report that the energy and O&M cost avoidance/savings for this reporting period exceeded the guarantee by 15%:

Category	Energy	O&M	Total	% to Guar
Guarantee - Year 2	$ 67,530	$ 47,174	$ 114,704	
Actual - Year 2	$ 84,309	$ 47,174	$ 131,483	**115%**
Excess/(Shortfall)	**$ 16,780**	**$ -**	**$ 16,780**	

Another way of representing the cost avoidance/savings figures outlined above is that, if the District had not implemented this project, actual costs for energy and O&M would have been $131,483 higher than the actual expenditures for the reporting period.

The remainder of this report provides a summary of improvements constructed under the EPC, the derivation of the O&M savings, an overview of the methodology used to track and report actual versus guaranteed savings (also known as "measurement and verification", or "M&V") and the technical back-up to support the reported savings figures.

It should be noted that the M&V Plan Methodology selected by the District is based on verification that individual ECMs are verified to be working as designed and that, as a result, maintain their ability to achieve the modeled cost avoidance/savings. This M&V reporting approach is not, nor is it intended to be, a year-over-year, or current year versus base year, comparison of utility billing data.

Original installation project scope and M&V Methodology were reviewed by the Governor's Energy Office/GEO prior to the signing of the original contract. Annual 3rd party review by GEO is available to the District (currently at no charge) and is encouraged by Honeywell and GEO.

Project Scope Summary by Facility

ECM ID	Energy Conservation Measure ("ECM") Name	ECM Description
Middle Park High School		
3.1	Control system upgrades	Integrate additional mechanical equipment into existing district building automation system implement night setback, optimum start, and demand control ventilation. Optimize existing air handling unit/AHU economizer controls and implement mixed air temperature reset and night setback to 60 degrees F with outside air/OSA dampers closed during unoccupied periods. This retrofit will provide remote monitoring capability and will result in lower energy costs.
5.1	Lighting fixture & lighting controls retrofit	Retrofit lighting fixtures with more efficient lamp and ballast combinations. Replace lighting fixtures with new fixtures where necessary. Delamp and add reflectors where feasible. This measure will result in improved lighting quality and lower energy and demand costs. Install photocells to allow for "daylight harvesting" in front entry area, and occupancy sensors in classrooms. This measure will result in lower energy and demand costs.
6.1	Window and door weatherization	Replace weather stripping and window caulking as needed. This measure will result in improved occupant comfort and lower energy costs.
8.1	Add variable frequency drives/VFD's to Air Handling Unit/AHU Fan Motors	Install variable frequency drives to Heating & Ventilating Unit/HVU-1 serving the auditorium, HVU-9 serving the old gym, and AHU-1 serving the new gym supply fan motors and rebalance airside systems. This measure will result in longer motor life and lower energy and demand costs.

Project Scope Summary by Facility

ECM ID	Energy Conservation Measure ("ECM") Name	ECM Description
East Grand Middle School		
3.1	Control system upgrades	Optimize existing AHU economizer controls and implement mixed air temperature reset and night setback to 60 degrees F with OSA dampers closed during unoccupied periods. This retrofit will result in lower energy costs.
5.1	Lighting fixture & lighting controls retrofit	Retrofit lighting fixtures with more efficient lamp and ballast combinations. Replace lighting fixtures with new fixtures where necessary. Delamp and add reflectors where feasible. This measure will result in improved lighting quality and lower energy and demand costs. Install photocells to allow for "daylight harvesting" in front entry area. This measure will result in lower energy and demand costs.
8.1	Add VFD's to AHU Fan Motors	Install variable frequency drives to AHU-4 serving the cafeteria/commons area and AHU-8 serving the gym supply fan motors and rebalance airside systems. This measure will result in longer motor life and lower energy and demand costs.
8.2	Domestic cold water/DCW pump replacement	Replace domestic cold water (DCW) booster pumps and motors. This measure will result in improved system reliability and lower energy and demand costs.

Project Scope Summary by Facility

ECM ID	Energy Conservation Measure ("ECM") Name	ECM Description
Fraser Valley Elementary School		
1.1	Boiler plant upgrades	Cross-connect two boiler plants. This retrofit will provide improved plant reliability and will result in lower energy costs.
3.1	Control system upgrades	Integrate additional mechanical equipment (HW pumps, unit heater serving bus barn, new unit vents) into existing district building automation system. Optimize existing AHU economizer controls, add demand control ventilation, and implement mixed air temperature reset and night setback to 60 degrees F with outside air/OSA dampers closed during unoccupied periods. This retrofit will provide remote monitoring capability and will result in lower energy costs.
5.1	Lighting fixture & lighting controls retrofit	Retrofit lighting fixtures with more efficient lamp and ballast combinations. Replace lighting fixtures with new fixtures where necessary. Delamp and add reflectors where feasible. This measure will result in improved lighting quality and lower energy and demand costs. Install photocells to allow for "daylight harvesting" in front entry area, and occupancy sensors in classrooms. This measure will result in lower energy and demand costs.
6.1	Window and door weatherization	Replace weather stripping and window caulking as needed. This measure will result in improved occupant comfort and lower energy costs.
8.1	Add VFD's to AHU Fan Motors	Install variable frequency drives to AHU-1 serving the new gym and rebalance airside systems. This measure will result in longer motor life and lower energy and demand costs.
12.1	Uninterruptible power supply replacement	Replace existing battery based power supply for emergency lighting system. This retrofit will provide improved system reliability.

Project Scope Summary by Facility

ECM ID	Energy Conservation Measure ("ECM") Name	ECM Description
Granby Elementary School		
3.1	Control system upgrades	Integrate new mechanical equipment (air handler only) into existing district building automation system. Implement demand control ventilation, night setback, and optimum start. This retrofit will provide remote monitoring capability and will result in lower energy costs.
5.1	Lighting fixture & lighting controls retrofit	Retrofit lighting fixtures with more efficient lamp and ballast combinations. Replace lighting fixtures with new fixtures where necessary. Delamp and add reflectors where feasible. This measure will result in improved lighting quality and lower energy and demand costs. Install occupancy sensors to shut lights off when spaces are not occupied. This measure will result in lower energy costs.
6.1	Window and door weatherization	Replace weather stripping and window caulking as needed. This measure will result in improved occupant comfort and lower energy costs.

Project Scope Summary by Facility

ECM ID	Energy Conservation Measure ("ECM") Name	ECM Description
Grand Lake Elementary School		
1.1	Boiler plant upgrades	Replace existing hot water boiler and circulating pumps with two boilers and two circulating pumps. This retrofit will provide improved plant reliability and will result in lower energy costs.
3.1	Control system upgrades	Integrate additional mechanical equipment (fan coil unit, unit ventilators, sewer lift pump) into existing district building automation system. Implement demand control ventilation, night setback, and optimum start. Replace heating valves in reheat boxes served by RTU-1. This retrofit will provide remote monitoring capability and will result in improved comfort and lower energy costs.
5.1	Lighting fixture & lighting controls retrofit	Retrofit lighting fixtures with more efficient lamp and ballast combinations. Replace lighting fixtures with new fixtures where necessary. Delamp and add reflectors where feasible. This measure will result in improved lighting quality and lower energy and demand costs. Install occupancy sensors to shut lights off when spaces are not occupied. This measure will result in lower energy costs.
6.1	Window and door weatherization	Replace weather stripping and window caulking as needed. This measure will result in improved occupant comfort and lower energy costs.
12.1	Emergency power supply replacement	Replace existing battery based power supply for emergency lighting system. This retrofit will provide improved system reliability.

Project Scope Summary by Facility

ECM ID	Energy Conservation Measure ("ECM") Name	ECM Description
District Office		
3.1	Control system upgrades	Integrate mechanical equipment into existing district building automation system. Implement night setback, optimum start, and other subroutines as appropriate. This retrofit will provide remote monitoring capability and will result in lower energy costs.
4.3	Furnace installation	Install furnace to serve east office space. This retrofit will provide ventilation and cooling to this area.
4.4	Condensing unit replacement	Replace existing condensing units serving offices and boardroom with like equipment. This retrofit will result in lower maintenance costs. Existing furnaces are 10 years old and high efficiency units and do not warrant replacement.
4.5	Gas fired radiant heater/GFRH installation	Replace existing unit heaters serving warehouse with gas-fired radiant heaters. This retrofit will result in lower energy costs.
5.1	Lighting fixture retrofit	Retrofit lighting fixtures with more efficient lamp and ballast combinations. Replace lighting fixtures with new fixtures where necessary. Delamp and add reflectors where feasible. This measure will result in improved lighting quality and lower energy and demand costs.
6.1	Window and door weatherization	Replace weather stripping and window caulking as needed. This measure will result in improved occupant comfort and lower energy costs.

Project Scope Summary by Facility

ECM ID	Energy Conservation Measure ("ECM") Name	ECM Description
Transportation Facility		
3.1	Control system upgrades	Integrate mechanical equipment into existing district building automation system. Implement night setback, optimum start, and other subroutines as appropriate. This retrofit will provide remote monitoring capability and will result in lower energy costs.
5.1	Lighting fixture & lighting controls retrofit	Retrofit lighting fixtures with more efficient lamp and ballast combinations. Replace lighting fixtures with new fixtures where necessary. Delamp and add reflectors where feasible. This measure will result in improved lighting quality and lower energy and demand costs. Install occupancy sensors to shut lights

M&V Methodology Overview

This report was generated using contract engineering formulas and utility cost rates to determine energy savings/cost avoidance results. The formulas and cost rates used were determined during the Technical Energy Audit development phase of the project, as included in the contract agreement as a Schedule Attachment.

The M&V Plan for this project is consistent with and based upon discussions and agreements between representatives from Honeywell Building Solutions, and the East Grand School District RE-2.

M&V Methodologies for the energy conservation measures (ECMs) implemented under this agreement are listed in Table C-5 below, as extracted from the contract agreement.

Option A Methodology

Under the guidelines of Option A Methodology, the energy cost avoidance determination is isolated to equipment/systems installed on an individual basis. Option A Methodology verifies performance through use of physical pre- and post- measurements/assessments. Usage factors can be measured or stipulated based upon engineering estimates, operating schedules, operator logs, typical weather data or other documented information sources. Post-retrofit measurements are made only once. Thereafter, inspections are conducted to verify that the installed equipment/system(s) continue to exhibit the capability to generate expected cost avoidance (e.g., commonly referred to as “potential to perform”). As long as the “potential to perform” capability is verified, the cost avoidance originally verified through the initial pre- and post-retrofit measurement data apply, and do not change over the remaining contract agreement term.

Option A Methodology has two major intents:

1. To provide reasonable processes and measurements for less complex ECMs whose performance and operational characteristics are well understood and unlikely to change over time, but still require an approach to measure and verify performance.
2. To balance the need for M&V with the cost impact of completing the M&V activity. That is, the cost to conduct the M&V activity(s) should not exceed the value of the data returned from the effort.

The sub/contractor provides verification that the retrofit equipment/system(s) installed are operating to the specifications of the manufacturer and to the specifications projected in the contract agreement through the documentation records provided by the installer upon ECM start up or commissioning.

Standard engineering practices and principals, equipment specifications and measured operational and performance parameters are used to determine utility consumption values by equipment type. Utility consumption by equipment type is projected to annual consumption determined by annual use (annual operating hours, occupancy, heating load, etc.). Annual consumption data is used to calculate annual utility costs suing applicable utility rate data.

Option B Methodology

Option B Methodology is a retrofit isolation approach with procedures similar to Option A Methodology, but due to the higher levels of complexity, require more end-use measurement and/or metering. Option B Methodology uses on-going periodic or continuous measurement/metering to capture data used to determine the energy use/cost avoidance during the post-retrofit period. The M&V method is intended for ECMs with performance and operational factors that can be measured at the component or system level, and where long-term performance needs to be verified. Short-term periodic measurements can be used when variations in the measured parameters are small. Continuous monitoring may be used to improve or optimize the operation of the equipment/system over time.

Option B Methodology has two major intents:

1. To verify performance over the life of the agreement using periodic or continuous measurement of appropriate energy quantities or operational parameters on a long-term basis. Usage factors may be stipulated as in Option A, or measured continuously as appropriate to each ECM within the project scope of work.
2. To balance the need for M&V with the cost impact of completing the M&V activity. That is, the cost to conduct the M&V activity(s) should not exceed the value of the data returned from the effort.

The sub/contractor provides verification that the retrofit equipment/system(s) installed are operating to the specifications of the manufacturer and to the specifications projected in the contract agreement through:

1. The documentation records provided by the installer upon start up or commissioning.
2. Use of periodic or continuous measurement/metering of appropriate energy quantities or operational parameters of individual ECMs where Option B Methodology is used.
3. Use of annual performance test results compared to those gathered and reported upon start up and commissioning.

Standard engineering practices and principals, equipment specifications and measured operational and performance parameters are used to determine utility consumption values by equipment type. Utility consumption by equipment type is projected to annual consumption determined by annual use (annual operating hours, occupancy, heating load, etc.). Annual consumption data is used to calculate annual utility costs suing applicable utility rate data.

Table C-5: Summary of M&V Methodology by ECM

ECM #	Energy Conservation Measures	Electric M&V Method	Fuel M&V Method
1.1	Boiler Plant Upgrades	Option B	Option B
3.1	Control System Upgrades	Option B	Option B
4.1	Unit Ventilator Upgrades *	Option A Inspect Only; No Savings Guarantee or Claim	
4.2	Heat Recovery Unit Installation *	Option A Inspect Only; No Savings Guarantee or Claim	
4.3	Furnace Installation *	Option A Inspect Only; No Savings Guarantee or Claim	
4.4	DX Condenser Replacement *	Option A Inspect Only; No Savings Guarantee or Claim	
4.5	Gas-Fired Radiant Heater Installation *	Option A Inspect Only; No Savings Guarantee or Claim	
5.1	Lighting Fixture & Control Retrofit	Option A	Option A
6.1	Window & Door Weatherization	Option A	Option A
8.1	Variable Frequency Drive (AHU Motors)	Option B	Option B
8.2	Domestic Cold Water Pump Replacement *	Option A Inspect Only; No Savings Guarantee or Claim	
12.1	Uniterruptible Power Supply Replacement *	Option A Inspect Only; No Savings Guarantee or Claim	

* NOTE: Initial verification by installer completion reports at Performance Phase turnover and customer signoff of work completion acceptance. ECMs without Savings Guarantee are only visually inspected for continued presence and operation during annual inspection surveys.

Table C-6: Option A Methodology Sampling Plan

ECM	Baseline Parameters	Potential to Save Verification Parameters	Guarantee Term Parameters To Be Monitored	Guarantee Term Sampling Plan
ECM 5.1 Lighting Retrofit	Measured Pre-Retrofit Fixture kW via direct measurement of Volts & Amps of Switch/Electrical Panel Circuits (Sample population 10% quantity [using 80/20 Confidence/Precision criteria] per Fixture Type, per Bldg. IES Standard Fixture kW for non-sampled fixture types. Baseline Utility Cost Rates. Stipulated Annual Use Hours.	Measured Post-Retrofit Fixture kW via direct measurement of Volts & Amps at same Switch/Electrical Panel Circuits completed Pre-Retrofit (Sample population 10% quantity [using 80/20 Confidence/Precision criteria] per Fixture Type, per Bldg. IES Standard Fixture kW for non-sampled fixture types. Higher of Baseline or Prevailing Utility Cost Rates. Stipulated Annual Use Hours.	Visual Inspection by Honeywell MVS to confirm ECM continued presence and operation during annual Site Visit Building Walk-Through Surveys.	No electrical parameter remeasurement. Verify continued presence of Post-Retrofit Fixtures by visual inspection during Honeywell MVS annual Site Visit Building Walk-Through Surveys & assessment of repair/replacement equipment inventories.
ECM 4.1 Unit Ventilator Upgrades	Pre-Retrofit Unit Descriptions, Quantities, Nameplate & Mfg Rating Data, Photodocs of Existing Units & Conditions, Engineering Calculations, & Utility Bill Baseline Data	Post-Retrofit Unit Descriptions, Quantities, Nameplate & Mfg Rating Data, Photodocs of New Installed Units, Engineering Calculations	Visual Inspection by Honeywell MVS to confirm ECM continued presence and operation during annual Site Visit Building Walk-Through Surveys.	Annual Site Visit Building Walk-Through Survey to Confirm ECM Operation.
ECM 4.2 Heat Recovery Unit Installation	Pre-Retrofit Unit Descriptions, Quantities, Nameplate & Mfg Rating Data, Photodocs of Existing Units & Conditions, Engineering Calculations, & Utility Bill Baseline Data	Post-Retrofit Unit Descriptions, Quantities, Nameplate & Mfg Rating Data, Photodocs of New Installed Units, Engineering Calculations	Visual Inspection by Honeywell MVS to confirm ECM continued presence and operation during annual Site Visit Building Walk-Through Surveys.	Annual Site Visit Building Walk-Through Survey to Confirm ECM Operation.
ECM 4.3 Furnace Installation	Pre-Retrofit Unit Descriptions, Quantities, Nameplate & Mfg Rating Data, Photodocs of Existing Units & Conditions, Engineering Calculations, & Utility Bill Baseline Data	Post-Retrofit Unit Descriptions, Quantities, Nameplate & Mfg Rating Data, Photodocs of New Installed Units, Engineering Calculations	Visual Inspection by Honeywell MVS to confirm ECM continued presence and operation during annual Site Visit Building Walk-Through Surveys.	Annual Site Visit Building Walk-Through Survey to Confirm ECM Operation.
ECM 4.4 DX Condenser Replacement	Pre-Retrofit Unit Descriptions, Quantities, Nameplate & Mfg Rating Data, Photodocs of Existing Units & Conditions, Engineering Calculations, & Utility Bill Baseline Data	Post-Retrofit Unit Descriptions, Quantities, Nameplate & Mfg Rating Data, Photodocs of New Installed Units, Engineering Calculations	Visual Inspection by Honeywell MVS to confirm ECM continued presence and operation during annual Site Visit Building Walk-Through Surveys.	Annual Site Visit Building Walk-Through Survey to Confirm ECM Operation.
ECM 4.5 Gas-Fired Radiant Heater Installation	Pre-Retrofit Unit Descriptions, Quantities, Nameplate & Mfg Rating Data, Photodocs of Existing Units & Conditions, Engineering Calculations, & Utility Bill Baseline Data	Post-Retrofit Unit Descriptions, Quantities, Nameplate & Mfg Rating Data, Photodocs of New Installed Units, Engineering Calculations	Visual Inspection by Honeywell MVS to confirm ECM continued presence and operation during annual Site Visit Building Walk-Through Surveys.	Annual Site Visit Building Walk-Through Survey to Confirm ECM Operation.
ECM 6.1 Window & Door Weatherization	Pre-Retrofit Unit Descriptions, Quantities, Nameplate & Mfg Rating Data, Photodocs of Existing Units & Conditions, Engineering Calculations, & Utility Bill Baseline Data	Post-Retrofit Unit Descriptions, Quantities, Nameplate & Mfg Rating Data, Photodocs of New Installed Units, Engineering Calculations	Visual Inspection by Honeywell MVS to confirm ECM continued presence and operation during annual Site Visit Building Walk-Through Surveys.	Annual Site Visit Building Walk-Through Survey to Confirm ECM Operation.
ECM 8.2 Domestic Chilled Water Pump Replacement	Pre-Retrofit Unit Descriptions, Quantities, Nameplate & Mfg Rating Data, Photodocs of Existing Units & Conditions, Engineering Calculations, & Utility Bill Baseline Data	Post-Retrofit Unit Descriptions, Quantities, Nameplate & Mfg Rating Data, Photodocs of New Installed Units, Engineering Calculations	Visual Inspection by Honeywell MVS to confirm ECM continued presence and operation during annual Site Visit Building Walk-Through Surveys.	Annual Site Visit Building Walk-Through Survey to Confirm ECM Operation.
ECM 12.1 Uninterruptible Power Supply Replacement	Pre-Retrofit Unit Descriptions, Quantities, Nameplate & Mfg Rating Data, Photodocs of Existing Units & Conditions, Engineering Calculations, & Utility Bill Baseline Data	Post-Retrofit Unit Descriptions, Quantities, Nameplate & Mfg Rating Data, Photodocs of New Installed Units, Engineering Calculations	Visual Inspection by Honeywell MVS to confirm ECM continued presence and operation during annual Site Visit Building Walk-Through Surveys.	Annual Site Visit Building Walk-Through Survey to Confirm ECM Operation.

Table C-7: Option B Methodology Sampling Plan

ECM	Baseline Parameters	Potential to Save Verification Parameters	Guarantee Term Parameters To Be Monitored	Guarantee Term Sampling Plan
ECM 1.1 **Boiler Plant Upgrades**	Pre-retrofit unit descriptions, quantities, nameplate & manufacturer/Mfg rating data, photodocs of existing units & conditions, engineering calculations, & utility bill baseline data; Operating hours; Setpoints; Pre-install combustion efficiency analysis	Manufacturer equipment data; Agreed To operating hours; control setpoints; Post-install combustion eEfficiency test/analysis	Annual Combustion Efficiency Tests	Annual combustion efficiency tests on two (2) 924 kBtu boilers; Comparison of new test results against initial post-install subcontractor/installer commissioning combustion efficiency test results
ECM 3.1 **Control System Upgrades**	Document operating hours with short term datalogging; demonstrate pre-retrofit outside air/OA intake conditions & temperature reset operation; Verify control points, program schedules; Stipulate manufacturer data.	Verify energy management system/EMS trending of run-hours; OA intake %; temperature reset; etc.	Annual checks of EMS operating parameters	Measurement & verification specialist (MVS) verifies schedules, control setpoints, etc. Comparison of findings against agreed-to operating parameters
ECM 8.1 **Variable Frequency Drives on AHU Fan Motors & Pumps**	Verify devices have capability to display volts/amps during "run up" tests. Assure installing subcontractor completes complete commissioning & documents "run up" tests for comparison to future M&V data collection.	Subcontractor/installer commissioning reports for future comparison to M&V data collection.	Annual "run up" tests by Honeywell MVS mirroring those completed during installation commissioning	Annual "run up" tests on 6 variable frequency drives/VFDs. Compare results to installing subcontractor commissioning post-install tests. Performance verified on comparable results. Determine ability of EMCS to trend for more detailed validation.

Utility Cost Rate Summary

Audit Year: 2

Phase 2 ESPC Project
Summary of Utility Rates Used in Calculations for Audit Period

Unit Cost Rates Used in Energy Cost Avoidance Calculations				
Location	**Electric Use $/kWh**	**Electric Demand $/kW**	**NatGas $/therm**	**NatGas $/MMBtu**
Middle Park High School	$ 0.0615	$ 4.5349	$ 0.8642	$ 8.6421
East Grand Middle School	$ 0.0615	$ 4.5349	$ 0.8642	$ 8.6421
Fraser Valley Elementary School	$ 0.0594	$ 4.5349	$ 0.8642	$ 8.6421
Granby Elementary School	$ 0.0688	$ 4.5349	$ 0.8642	$ 8.6421
Grand Lake Elementary School	$ 0.0803	$ 4.5349	$ 0.8642	$ 8.6421
Indian Peaks Charter School	$ 0.0907	$ -	$ 1.0519	$ 10.5190
District Office	$ 0.0907	$ -	$ 1.0123	$ 10.1227
Transportation	$ 0.0907	$ -	$ 0.8642	$ 8.6421

NOTE: The above table lists the unit cost rates applicable to this energy audit period for energy savings determination. The data is summarized from the TEA Report, Utility Rate Analysis Section, that is part of the contract document by inclusion, and previously reviewed and accepted by the customer and the Colorado GEO.

< Page Intentionally Blank >

Report Section 2.0
Detail Summaries

Energy Cost Avoidance Summary 25

O&M Cost Avoidance Summary 26

Cumulative Cost Avoidance Summary 28

Standards of Comfort Summary 29

< Blank Page >

Energy Cost Avoidance Summary

Audit Year 2

Phase 2 ESPC Project
July 2011 through June 2012

Energy Cost Avoidance by ECM - Audit Year 2					
Guar Savings?	ECM#	Energy Conservation Measures	Electric Cost Avoidance	Fuel Cost Avoidance	Total Cost Avoidance
GLE Only	1.1	Boiler Plant Upgrade (Grand Lake Elem)	$ -	$ 687	$ 687
Yes	3.1	Control System Upgrades	$ 14,101	$ 19,900	$ 34,001
No	4.1	Unit Ventilator Upgrades	N/A	N/A	N/A
No	4.2	Heat Recovery Unit Installation	N/A	N/A	N/A
No	4.3	Furnace Installation	N/A	N/A	N/A
No	4.4	DX Condenser Replacement	N/A	N/A	N/A
No	4.5	Gas-Fired Radiant Heater Installation	N/A	N/A	N/A
Yes	5.1	Lighting Fixture & Control Retrofit	$ 40,474	$ -	$ 40,474
Yes	6.1	Window & Door Weatherization	$ -	$ 3,447	$ 3,447
Yes	8.1	Variable Frequency Drive (AHU Motors)	$ 5,702	$ -	$ 5,702
No	8.2	Domestic Cold Water Pump Replacement	N/A	N/A	N/A
No	12.1	Uninterruptible Power Supply Replacement	N/A	N/A	N/A
No	14.0	Fire Alarm System Upgrade	N/A	N/A	N/A
			$ 60,276	**$ 24,033**	**$ 84,309**

Note: "N/A" is noted where no savings are estimated or claimed. The primary emphasis for these work items was to reduce maintenance, and improve infrastructure and occupant comfort rather than generate specific energy savings.

O&M Cost Avoidance Summary

Operational cost avoidance (savings) were based on the District's pre-construction annual cost figures for purchased material, supplies and services that would be reduced through the implementation of the improvements in the Honeywell EPC. There operational cost avoidance values were identified by Honeywell and the District, reviewed and agreed to by a team of the District's representatives, including Nancy Karas (Superintendent) and John Weninger (Director of Facilities).

These operational cost avoidance/savings listed below are agreed to by contract, and deemed satisfied upon contract execution, but will be reported annually for the full term of the agreement to provide full reporting of annual cost avoidance/ savings.

The tables below provide a summary of annual O&M Cost Avoidance/Savings as included in contract pages 7-10 (of 142) in the original EPC Schedules & Exhibits entitled, "Operational Cost Savings".

NOTE: The first table, *"Source Data & Operations & Maintenance Cost Avoidance by ECM – Audit Year #1"* provides details for O&M Savings agreed to for Audit Year #1. The second table, *"O&M Cost Avoidance by Year & ECM (per EPC)"* lists the applicable O&M Savings for future years based on the agreed to annual escalation factors. Appropriate values are reported for the reported audit year.

Source Data & Operations & Maintenance Cost Avoidance by ECM - Audit Year #1

Measure	ECM#	O&M Savings Narrative	Customer Cost	% Savings	$ Savings	$ Other Savings	Year #1 Annual Savings $
Mechanical Improvements	1.1 4.x	% Savings comes from replacing HVAC at end-of-life reduces repair costs. Add'l savings from avoided repairs on Domestic Cold Water System @ East Grand Elem ($2k/yr per John Weninger) & reducted service agreement cost of $15K/yr.	$ 310,008	2.52%	$ 7,800	$ 17,000	$ 24,800
Controls	3.1	% Savings from reduced purchased material & supplies from conversion of older pneumatic controls to DDC.	$ 326,570	2.51%	$ 8,200	$ -	$ 8,200
Lighting	5.1	% Savings from replacement of existing & older lighting systems with new equipment; reduced purchased material & supplies.	$ 276,567	2.49%	$ 6,900	$ -	$ 6,900
Weatherization	6.1	% Savings from replacement of worn gaskets, seals & door swipes, and elimination of purchased material & supplies.	$ 41,701	5.04%	$ 2,100	$ -	$ 2,100
UPS	12.1	Savings from avoided repair costs.	$ 6,209	N/A	$ 500	$ -	$ 500
Fire Alarm	14.0	% Savings from reduced purchased material & supplies for older/obsolete equipment, and elimination of Simplex monitoring services.	$ 31,354	2.55%	$ 800	$ 2,500	$ 3,300
							$ 45,800

O&M Cost Avoidance by Year & ECM (per EPC)							
Year	ECM 1.1 & 4.x Mechanical	ECM 3.1 Controls	ECM 5.1 Lighting	ECM 6.1 Weatherization	ECM 12.1 UPS	ECM 14.0 Fire Alarm	Total
1	$ 24,800	$ 8,200	$ 6,900	$ 2,100	$ 500	$ 3,300	$ 45,800
2	**$ 25,544**	**$ 8,446**	**$ 7,107**	**$ 2,163**	**$ 515**	**$ 3,399**	**$ 47,174**
3	$ 26,310	$ 8,699	$ 7,320	$ 2,228	$ 530	$ 3,501	$ 48,589
4	$ 27,100	$ 8,960	$ 7,540	$ 2,295	$ 546	$ 3,606	$ 50,047
5	$ 27,913	$ 9,229	$ 7,766	$ 2,364	$ 563	$ 3,714	$ 51,548
6	$ 28,750	$ 9,506	$ 6,989	$ 2,434	$ 580	$ 3,826	$ 52,085
7	$ 29,612	$ 9,791	$ 6,213	$ 2,508	$ 597	$ 3,940	$ 52,661
8	$ 30,501	$ 10,085	$ 5,436	$ 2,583	$ 615	$ 4,059	$ 53,278
9	$ 31,416	$ 10,388	$ 4,660	$ 2,660	$ 633	$ 4,180	$ 53,937
10	$ 32,358	$ 10,699	$ 3,883	$ 2,740	$ 652	$ 4,306	$ 54,639
11	$ 33,329	$ 11,020	$ 3,106	$ 2,822	$ 672	$ 4,435	$ 55,385
12	$ 34,329	$ 11,351	$ 2,330	$ 2,907	$ 692	$ 4,568	$ 56,177
13	$ 35,359	$ 11,691	$ 1,553	$ 2,994	$ 713	$ 4,705	$ 57,015
14	$ 36,420	$ 12,042	$ 777	$ 3,084	$ 734	$ 4,846	$ 57,903
15	$ 37,512	$ 12,403	$ -	$ 3,176	$ 756	$ 4,992	$ 58,840
16	$ 38,638	$ 11,163	$ -	$ 3,272	$ 681	$ 4,492	$ 58,245
17	$ 39,797	$ 9,923	$ -	$ 3,370	$ 605	$ 3,993	$ 57,687
18	$ 35,817	$ 8,682	$ -	$ 3,471	$ 529	$ 3,494	$ 51,994
19	$ 31,837	$ 7,442	$ -	$ 3,575	$ 454	$ 2,995	$ 46,303
20	$ 27,858	$ 6,202	$ -	$ 3,682	$ 378	$ 2,496	$ 40,616
							$ 1,049,923

Cumulative Cost Avoidance Summary

A	B	C	D	E	F	G	H	I	J	K	L
	Guaranteed Savings			Actual Savings		Savings Excess/(Shortfall)					
Total Energy Guarantee = $1,995,928 Over Term	Annual Energy Cost Avoidance / Savings Estimate	Annual O&M Cost Avoidance / Savings Estimate & Results ❶	Total Annual Energy & O&M Cost Avoidance / Savings Estimate (B + C)	Annual Energy Cost Avoidance / Savings Results	Total Annual Energy + O&M Cost Avoidance / Savings Results (C + E)	Annual Energy + O&M Cost Avoidance / Savings Excess / (Shortfall) (F - D)	Cost Avoidance / Savings Shortfall Payment Received	Inception-to-Date Cost Avoidance / Savings Results (Previous Year + F + H)	Inception-to-Date Cost Avoidance / Savings Estimate (Previous Year + D)	Inception-to-Date Excess Savings or (Shortfall) (I - J)	Inception-to-Date Performance vs. Estimate (I / J)
Install Period	$ 16,194	$ -	$ 16,194	$ 20,141	$ 20,141	$ 3,948		$ 20,141	$ 16,194	$ 3,948	124%
Year 1	$ 64,777	$ 45,800	$ 110,577	$ 81,101	$ 126,901	$ 16,325		$ 147,043	$ 126,770	$ 20,273	116%
Year 2	$ 67,530	$ 47,174	$ 114,704	$ 84,309	$ 131,483	$ 16,780		$ 278,526	$ 241,474	$ 37,052	115%
Year 3	$ 70,400	$ 48,589	$ 118,989								
Year 4	$ 73,392	$ 50,047	$ 123,438								
Year 5	$ 76,511	$ 51,548	$ 128,059								
Year 6	$ 79,762	$ 52,085	$ 131,848								
Year 7	$ 83,152	$ 52,661	$ 135,814								
Year 8	$ 86,686	$ 53,278	$ 139,965								
Year 9	$ 90,370	$ 53,937	$ 144,307								
Year 10	$ 94,211	$ 54,639	$ 148,850								
Year 11	$ 98,215	$ 55,385	$ 153,600								
Year 12	$ 102,389	$ 56,177	$ 158,566								
Year 13	$ 106,741	$ 57,015	$ 163,756								
Year 14	$ 111,277	$ 57,903	$ 169,180								
Year 15	$ 116,007	$ 58,840	$ 174,846								
Year 16	$ 120,937	$ 58,245	$ 179,182								
Year 17	$ 126,077	$ 57,687	$ 183,764								
Year 18	$ 131,435	$ 51,994	$ 183,429								
Year 19	$ 137,021	$ 46,303	$ 183,324								
Year 20	$ 142,844	$ 40,616	$ 183,460								
Total	**$ 1,995,928**	**$ 1,049,923**	**$ 3,045,852**	**$ 185,552**	**$ 278,526**	**$ 37,052**		**$ 278,526**	**$ 241,474**	**$ 37,052**	**115%**

❶ See O&M Cost Avoidance Summary pages for details.

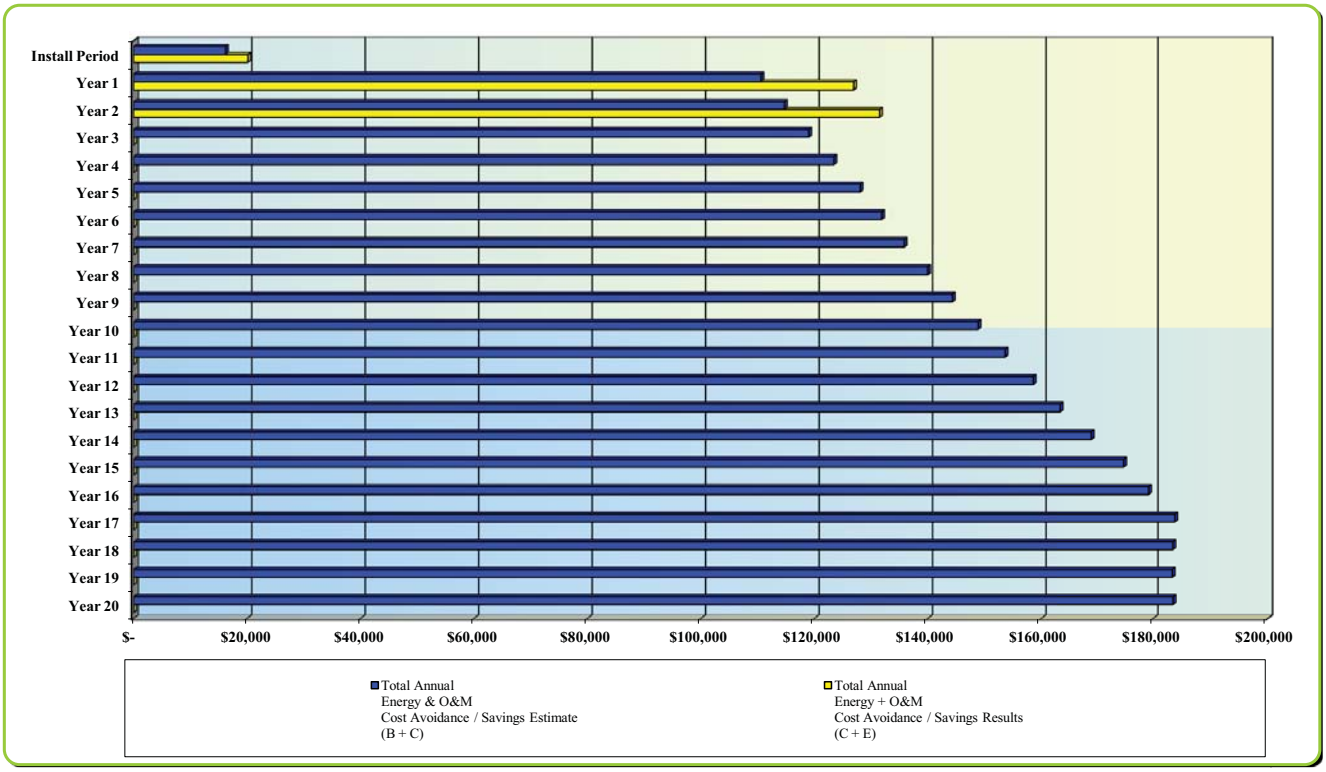

East Grand School District RE-2

Summary of Contract Agreement - Schedule G

Note: This table summarizes the schedules agreed for building operations and the basis for energy cost avoidance/savings results. Should deviations be discovered during M&V activities over the life of the agreement, they will be reported for review and corrective action. However, energy cost avoidance/savings results will be based upon these values since EGSD is responsible for schedule

School	Area	M-Th	Fri	Sat	Sun	Occupied Heat/Cool	UnOcc Heat/Cool	Max Annual Hours	Special Conditions
Middle Park High	*Administrative Offices*	6am - 4pm	6am - 11am	OFF	OFF	72/ --	60/ --	2,340	
	Auditorium (HVU-1)	6am - 4pm	OFF	OFF	OFF	68-72/ --	60/ --	2,165	Play/Practice; Fri (+72 Hrs); Sat OFF except Concerts (+13 Hrs)
	Classroom Additions (1998 & 2008)	6am - 4pm	OFF	OFF	OFF	68-72/ --	60/ --	2,080	
	Common Areas / Restrooms	6am - 4pm	6am - 11am	OFF	OFF	68-72/ --	65/ --	2,655	Nov-Mar; Fri 6am-6pm; Sat 11am-7pm
	Gyms (New & Old)	6am - 4pm	6am - 11am	OFF	OFF	68-72/ --	60/ --	2,655	Nov-Mar; Fri 6am-6pm; Sat 11am-7pm
	Kitchen	6am - 11am	OFF	OFF	OFF	68-72/ --	65/ --	1,040	
	Locker Rooms	6am - 4pm	6am - 11am	OFF	OFF	68-72/ --	60/ --	2,760	Nov-Mar; Fri 6am-9pm; Sat 11am-9pm
	Media Center/Orig Classrooms/Band Hall	6am - 4pm	OFF	OFF	OFF	68-72/ --	65/ --	2,080	
	PC Labs	6am - 4pm	6am - 11am	OFF	OFF	68-72/ --	65/ --	2,340	
	Storage/Mechanical/Custodian	6am - 4pm	6am - 11am	OFF	OFF	68/ --	65/ --	2,340	
	Vocational Shops	6am - 4pm	6am - 11am	OFF	OFF	65-72/ --	65/ --	2,340	
	Weight Room	6am - 4pm	OFF	OFF	OFF	68-70/ --	60/ --	2,080	
East Grand Middle	*Administrative Offices*	6am - 4pm	6am - 11am	OFF	OFF	72-74/ --	65/ --	2,340	
	Classrooms / Band Room	6am - 4pm	OFF	OFF	OFF	68-72/ --	65/ --	2,080	
	Gym & Common Areas	6am - 4pm	6am - 11am	OFF	OFF	68-70/ --	60/ --	2,655	Nov-Mar; Fri 6am-6pm; Sat 11am-7pm
	Gym (New)	6am - 4pm	6am - 11am	OFF	OFF	68-72/ --	60/ --	2,487	Nov-Mar; Fri 6am-6pm
	Kitchen	9am - 2pm	OFF	OFF	OFF	68-70/ --	60/ --	1,040	
	Locker Rooms	6am - 4pm	6am - 11am	OFF	OFF	68-72/ --	60/ --	2,760	Nov-Mar; Fri 6am-9pm; Sat 11am-9pm
Grand Lake Elementary	*Administrative Offices*	6am - 4pm	6am - 11am	OFF	OFF	72-74/ --	65/ --	2,361	Nov-Mar; M-Th 5am-4pm
	Classroom Addition (2005)	6am - 4pm	6am - 11am	OFF	OFF	70-72/ --	60/ --	2,340	
	Gym	6am - 4pm	6am - 11am	OFF	OFF	68-72/ --	60/ --	2,420	Activities (+80 hrs)
	Kitchen	9am - 1pm	OFF	OFF	OFF	70/ --	65/ --	832	
	Media Center / Library	6am - 4pm	OFF	OFF	OFF	68-70/ --	65/ --	2,080	
	Music Room	6am - 4pm	6am - 11am	OFF	OFF	70-72/ --	60/ --	2,340	
	Original Building	6am - 4pm	6am - 11am	OFF	OFF	70-72/ --	65/ --	2,340	
Fraser Valley Elementary	*Administrative Offices*	6am - 4pm	6am - 11am	OFF	OFF	72-74/ --	65/ --	2,340	Nov-Mar; M-Th 5am-4pm
	Classrooms (1998) & Commons	6am - 4pm	6am - 11am	OFF	OFF	70-72/ --	60/ --	2,340	
	Gym	6am - 4pm	6am - 11am	OFF	OFF	68-72/ --	65/ --	2,420	Activities (+80 hrs)
	Kitchen	9am - 1pm	OFF	OFF	OFF	70/ --	65/ --	832	
	Original Building	6am - 4pm	6am - 11am	OFF	OFF	70-72/ --	65/ --	2,340	
Granby Elementary	*Administrative Offices*	6am - 4pm	6am - 11am	OFF	OFF	72-74/ --	65/ --	2,361	Nov-Mar; M-Th 5am-4pm
	Cafeteria	6am - 4pm	6am - 11am	OFF	OFF	68-72/ --	65/ --	2,340	
	Classrooms (2005) & Commons	6am - 4pm	6am - 11am	OFF	OFF	70-72/ --	60/ --	2,340	
	Gym	6am - 4pm	6am - 11am	OFF	OFF	68-72/ --	65/ --	2,420	Activities (+80 hrs)
	Kitchen	9am - 1pm	OFF	OFF	OFF	70/ --	65/ --	832	
	Media Center / Library	6am - 4pm	OFF	OFF	OFF	68-70/ --	65/ --	2,080	
	Original Building	6am - 4pm	6am - 11am	OFF	OFF	70-72/ --	65/ --	2,340	

Standards of Comfort Summary

East Grand School District RE-2

Summary of Contract Agreement - Schedule G

Note: This table summarizes the schedules agreed for building operations and the basis for energy cost avoidance/savings results. Should deviations be discovered during M&V activities over the life of the agreement, they will be reported for review and corrective action. However, energy cost avoidance/savings results will be based upon these values since EGSD is responsible for schedule

School	Area	M-Th	Fri	Sat	Sun	Occupied Heat/Cool	UnOcc Heat/Cool	Max Annual Hours	Special Conditions
District Office	*Boardroom*	As Needed	OFF	OFF	OFF	70-74/ --	60/ --	120	One - Three Tuesday/Month 4pm-9pm
	Offices	6am - 4pm	OFF	OFF	OFF	72-74/ --	60/ --	2,080	
	Warehouse	6am - 4pm	OFF	OFF	OFF	55-60/ --	55/ --	2,280	200 Hrs/Yr included for Plowing & Maintenance
	West Wing / Bathrooms	6am - 4pm	OFF	OFF	OFF	68/ --	60/ --	2,080	
Indian Peaks Charter	*All Areas*	8am - 4pm	8am - 4pm	OFF	OFF	68-72/ --	60/ --	2,080	
Transportation	*Bus Barn*	24/7	24/7	24/7	24/7	50/ --	50/ --	8,760	
	Offices	6am - 5pm	OFF	OFF	OFF	70-72/ --	60/ --	2,288	

NOTE: Colors used in the table above are only used to make it easy to visually identify schedule duplication and differences.

Report Section 3.0
Savings Calculations

ECM 1.1 - Boiler Plant Upgrades 33

ECM 3.1 - Control System Upgrades 37

ECM 5.1 - Lighting Retrofit 77

ECM 6.1 - Weatherization (Windows/Doors) 111

ECM 8.1 - Variable Frequency Drives (VFDs) 113

< Blank Page >

Grand Lake Elementary School

Pre-Retrofit Boiler % From Combustion Test =	79.6%	Baseline Efficiency
Audit Period Boiler % From Combustion Test =	86.8%	(Average of Boiler #1 & #2)

Savings Calculations

Energy Savings = Annual Gas Usage By Boiler x (1 - (Exist Effic/Proposed Effic))

Baseline Gas Usage From Utilities =	1,294	MMBtu/yr
Base Load For DHW =	336	MMBtu/yr
Gas Usage For Boiler =	958	MMBtu/yr

Gas Energy Savings =	79	MMBtu/yr
Applicable NatGas Cost Rate =	$ 8.6421	/MMBtu/yr (from Table in Section 2.0)
Gas Cost Savings =	**$ 687**	

	Electricity					
	Consumption (kWh)	Demand (kW)	Gas (MMBtu)	Electric Cost	Gas Cost	Total Cost
Baseline	-	-	958	$ -	$ 8,279	$ 8,279
Audit Period Results	-	-	879	$ -	$ 7,592	$ 7,592
Savings	-	-	79	$ -	$ 687	$ 687

Pre-Retrofit Boiler Efficiency Report

Combustion Efficiency % Provided Directly on Report: 79.6%

GRAND LAKE Plumbing Co.

Plumbing • Heating • Mechanical Contractors

Service Partner™

OBSERVATIONS/RCOMMENDATIONS

Service Partner: EAST GRAND SCHOOLS

Technician: SEFF

Dispatch Number: 14269

Date: 08-13-09

OBSERVATIONS / RECOMMENDATIONS

OBSERVATIONS/RCOMMENDATIONS GRAND LK ELEM. BOILER COMBUSTION TEST

BOILER MODEL # C2-60-15 HBS-10
SERIAL # 68025407
BTU – 2100

CO & O2 22 PPM 9.6
ZERO DRAFT 2 ERO MB
CO & DRAFT 9 PPM , 30 MB
CO2 & EXCESS AIR 11.8 PPM 25.1 MB
STACK TEMP & EFFICENCY 301°C 79.6%
AMBIENT AIR 21°C
CO AIR FREE 20 PPM

Grand Lake Plumbing Co. • PO Box 529 • Grand Lake, Colorado 80447 • www.grandlakeplumbing.com

White copy - office Yellow copy - Customer

Service Partner™ Observations. © Copyright 2004 Nextar, Inc. All Rights Reserved.

Rev. 11/05

Audit Period Boiler Combustion Efficiency Test Results — Audit Year 2

Boiler #1

Boiler Make: Buderus
Boiler Model #: G315-9
Boiler Serial #: 05178848-00-8322-0198

Combustion Efficiency Results:
Combustion Effic % = 86.9

Boiler #2

Boiler Make: Buderus
Boiler Model #: G315-9
Boiler Serial #: 05178848-00-8330-0204

Combustion Efficiency Results:
Combustion Effic % = 86.7

Audit Period Combustion Efficiency Test Reports — Audit Year 2

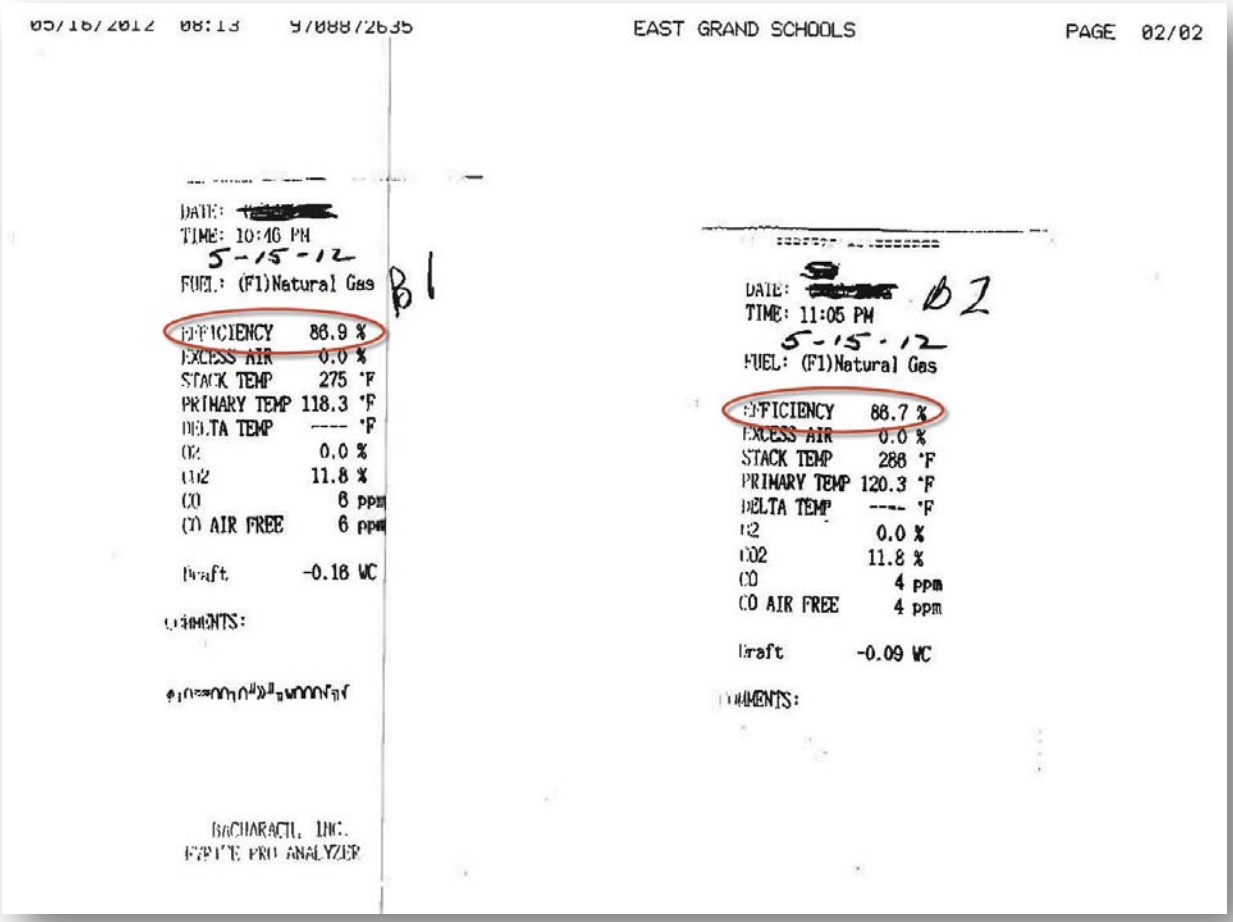

05/16/2012 08:13 9/088/2635 EAST GRAND SCHOOLS PAGE 02/02

DATE: [redacted]
TIME: 10:46 PM
5-15-12
FUEL: (F1)Natural Gas
B1

EFFICIENCY 86.9 %
EXCESS AIR 0.0 %
STACK TEMP 275 °F
PRIMARY TEMP 118.3 °F
DELTA TEMP ---- °F
O2 0.0 %
CO2 11.8 %
CO 6 ppm
CO AIR FREE 6 ppm

Draft -0.18 WC

COMMENTS:

BACHARACH, INC.
PRO ANALYZER

DATE: [redacted]
TIME: 11:05 PM
5-15-12
FUEL: (F1)Natural Gas
B2

EFFICIENCY 86.7 %
EXCESS AIR 0.0 %
STACK TEMP 288 °F
PRIMARY TEMP 120.3 °F
DELTA TEMP ---- °F
O2 0.0 %
CO2 11.8 %
CO 4 ppm
CO AIR FREE 4 ppm

Draft -0.09 WC

COMMENTS:

< Blank Page >

East Grand School District

The M&V Plan calls for a review of EMCS equipment schedules and control setpoints for comparison to the parameters listed in the Standards of Comfort Summary. It is the responsibility of the customer to maintain operating parameters within the agreed boundaries. If operational parameters are found to be outside the boundaries of the Standards of Comfort, savings will be reported based on the agreed parameters, and deviations will be reviewed with the customer to as to impact, and Honeywell will work with the customer to determine an appropriate corrective action plan.

A review of the EMCS Control Schedules and Setpoints was completed during the annual M&V Site Visit on June 11, 2012 prior to the generation of this report. Parameters checked were within the expected boundaries as outlined in the Standards of Comfort Summary.

ECM 3.1 Control System Totals - All Facilities
Note: These totals include the CO2 Sensor Gas Savings noted in table below.

Description	Electricity Consumption (kWh)	Demand (kW)	Gas (MMBtu)	Electric Cost	Gas Cost	Total Cost
Baseline	2,332,215	6,073	16,322.5	$176,839	$142,290	$319,129
Adjusted Baseline	2,690,235	6,886	17,697.5	$204,777	$154,583	$359,361
Audit Period Model	2,466,776	6,949	15,403.1	$190,676	$134,684	$325,360
Savings	**223,459**	**(63)**	**2,294.4**	**$ 14,101**	**$ 19,900**	**$ 34,001**

NOTE: Baseline Adjustments are included to account for the increase in building addition square footage for the 2008 additions at Middle Park High School, Fraser Valley Elementary School, Granby Elementary School, and Indian Peaks Charter School. In addition, a Baseline Adjustment is included for East Grand Middle School to account for the addition of ventilation air for the gymnasium.

ECM 3.1 CO2 Sensor Gas Savings for MPHS, EGMS, & FVES
Note: These savings are included in ECM 3.1 Control System Totals table above.)

Description	Electricity Consumption (kWh)	Demand (kW)	Gas (MMBtu)	Electric Cost	Gas Cost	Total Cost
Baseline	-	-	832.8	$ -	$ 6,904	$ 6,904
Audit Period Model	-	-	241.5	$ -	$ 2,002	$ 2,002
Savings	**-**	**-**	**591.3**	**$ -**	**$ 4,902**	**$ 4,902**

Normalized Utility and Weather Data for Middle Park High School

Weather Data				Electricity						Natural Gas		
Month	Actual Days	HDD	CDD	kW-hrs/ Day	Nrmlzd kW-hrs	Demand, kW	Demand Charge	Energy & Misc Charge	Nrmlzd Tot Charge	Therms/ Day	Nrmlzd Therms	Nrmlzd Total Charge
Dec-06	31	1,370	-	2,294	71,100	218	$ 846	$ 5,104	$ 5,950	236	7,326	$ 4,996
Jan-07	31	1,526	-	2,309	71,582	205	$ 796	$ 4,989	$ 5,785	254	7,860	$ 4,239
Feb-07	28	1,121	-	2,503	70,097	216	$ 838	$ 4,995	$ 5,834	207	5,800	$ 4,504
Mar-07	31	943	-	2,357	73,071	220	$ 854	$ 5,358	$ 6,213	160	4,950	$ 3,831
Apr-07	30	681	-	2,328	69,828	212	$ 821	$ 5,042	$ 5,863	120	3,600	$ 1,773
May-07	31	494	-	2,331	72,274	205	$ 796	$ 5,038	$ 5,834	71	2,200	$ 1,585
Jun-07	30	198	10	1,188	35,654	186	$ 721	$ 2,990	$ 3,710	27	800	$ 647
Jul-07	31	18	30	939	29,100	69	$ 268	$ 1,998	$ 2,265	6	180	$ 350
Aug-07	31	48	18	1,473	45,655	188	$ 729	$ 3,499	$ 4,228	11	340	$ 484
Sep-07	30	301	2	2,057	61,714	199	$ 771	$ 4,574	$ 5,345	45	1,340	$ 696
Oct-07	31	690	-	2,371	73,500	224	$ 871	$ 5,268	$ 6,138	103	3,200	$ 1,034
Nov-07	30	968	-	2,231	66,938	224	$ 871	$ 4,832	$ 5,703	158	4,740	$ 2,489
Dec-07	31	1,495	-	2,050	63,550	229	$ 996	$ 5,259	$ 6,254	189	5,870	$ 4,474
Jan-08	31	1,591	-	2,294	71,118	233	$ 1,014	$ 5,467	$ 6,481	205	6,360	$ 4,661
Feb-08	29	1,306	-	2,250	65,250	231	$ 1,005	$ 5,390	$ 6,395	180	5,220	$ 4,543
Mar-08	31	1,176	-	2,244	69,578	214	$ 929	$ 5,687	$ 6,616	149	4,630	$ 4,425
Apr-08	30	928	-	2,545	76,355	224	$ 976	$ 5,892	$ 6,868	113	3,380	$ 3,312
May-08	31	605	-	2,419	74,981	222	$ 967	$ 5,716	$ 6,683	85	2,650	$ 2,961
Jun-08	30	290	-	1,446	43,393	190	$ 826	$ 3,794	$ 4,620	20	600	$ 913
Jul-08	31	56	7	1,279	39,662	112	$ 488	$ 2,994	$ 3,482	-	-	$ 321
Aug-08	31	115	12	1,779	55,159	166	$ 723	$ 4,344	$ 5,067	18	560	$ 729
Sep-08	30	346	-	2,090	62,700	220	$ 958	$ 5,021	$ 5,979	77	2,310	$ 784
Oct-08	31	686	-	2,441	75,683	233	$ 1,014	$ 5,955	$ 6,969	148	4,590	$ 1,930
Nov-08	30	956	-	2,921	87,632	289	$ 1,258	$ 6,519	$ 7,777	213	6,390	$ 4,264

Weather data provided by Metrix.
Note that dekatherms have been converted to therms here.

Combined Data for Model Calibration Purposes
EGSD Middle Park High School

Monthly gas and electric meter data is averaged for the period December 2006 - November 2008.

Month	Days	kWh/day	Total kWh	Total kW	Therms/day	Total Therms
January	31	2,302	71,350	219	229	7,110
February	28	2,377	66,548	224	194	5,420
March	31	2,301	71,325	217	155	4,790
April	30	2,436	73,091	218	116	3,490
May	31	2,375	73,628	214	78	2,425
June	30	1,317	39,523	188	23	700
July	31	1,109	34,381	91	3	90
August	31	1,626	50,407	177	15	450
September	30	2,074	62,207	209	61	1,825
October	31	2,406	74,591	229	126	3,895
November	30	2,576	77,285	257	186	5,565
December	31	2,172	67,325	224	213	6,598
Annual Totals	**365**		**761,660**	**2,465**		**42,358**

Supporting Data for Baselining Trane Trace 700 Simulation Used in Proposed Energy Savings Calculations

ENERGY SIMULATION CALIBRATION TO BASELINE UTILITY

COMPARISON OF MEASURED AND PREDICTED -- ELECTRIC ENERGY AND DEMAND

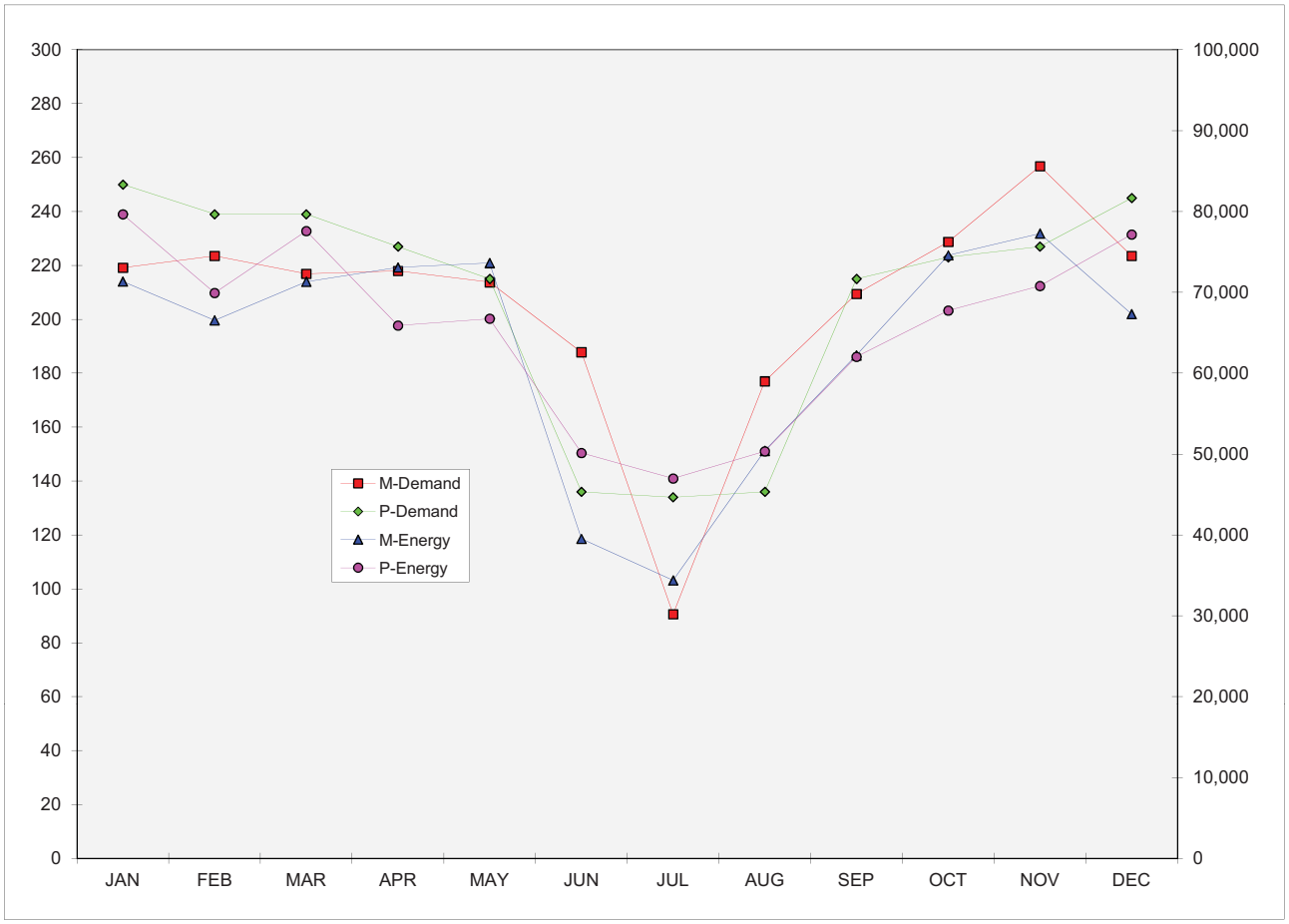

	Maximum Demand			Total Consumption		
Month	Measured (kW)	Predicted (kW)	Delta (%)	Measured (kWh)	Predicted (kWh)	Delta (%)
JAN	219	250	14.1%	71,350	79,658	11.6%
FEB	224	239	6.9%	66,548	69,925	5.1%
MAR	217	239	10.2%	71,325	77,580	8.8%
APR	218	227	4.2%	73,091	65,895	-9.8%
MAY	214	215	0.6%	73,628	66,748	-9.3%
JUN	188	136	-27.6%	39,523	50,136	26.9%
JUL	91	134	47.9%	34,381	46,979	36.6%
AUG	177	136	-23.2%	50,407	50,344	-0.1%
SEP	209	215	2.7%	62,207	62,037	-0.3%
OCT	229	223	-2.5%	74,591	67,748	-9.2%
NOV	257	227	-11.6%	77,285	70,784	-8.4%
DEC	224	245	9.6%	67,325	77,150	14.6%
Totals:	2,465	2,486	0.8%	761,660	**784,984**	3.1%
PEAK (kW)	257	250	-2.6%			

Supporting Data for Baselining Trane Trace 700 Simulation Used in Proposed Energy Savings Calculations

Baseline Adjustment for 2008 Square Footage Addition		
Month	Maximum Demand Predicted (kW)	Total Consumption Predicted (kWh)
JAN	316	97,288
FEB	290	85,138
MAR	290	94,929
APR	273	80,032
MAY	260	81,531
JUN	172	60,886
JUL	168	56,508
AUG	172	61,067
SEP	260	75,430
OCT	269	82,743
NOV	281	86,366
DEC	298	93,591
Totals	**3,049**	**955,509**
PEAK (kW)	**316**	

With ASHRAE 62.1 Ventilation Rates (Fully Occupied)		
Month	Maximum Demand Predicted (kW)	Total Consumption Predicted (kWh)
JAN	250	79,699
FEB	239	69,952
MAR	239	77,636
APR	227	65,911
MAY	215	66,752
JUN	136	50,137
JUL	134	46,979
AUG	136	50,308
SEP	215	62,036
OCT	223	67,900
NOV	227	70,795
DEC	245	77,186
Totals	**2,486**	**785,291**
PEAK (kW)	**250**	

With ECM 3.1 Energy Savings		
Month	Maximum Demand Predicted (kW)	Total Consumption Predicted (kWh)
JAN	318	89,747
FEB	298	78,790
MAR	298	89,796
APR	273	76,063
MAY	260	76,541
JUN	172	57,235
JUL	155	52,779
AUG	172	57,987
SEP	260	70,433
OCT	269	79,156
NOV	293	80,758
DEC	304	86,051
Totals	**3,072**	**895,336**
PEAK (kW)	**318**	

Supporting Data for Baselining Trane Trace 700 Simulation Used in Proposed Energy Savings Calculations

ECM 3.1 Control System Upgrade

	Electricity					
	Consumption (kWh)	Demand (kW)	Gas (MMBtu)	Electric Cost	Gas Cost	Total Cost
Baseline	784,984	2,486	4,371	$ 59,556	$ 37,774	$ 97,331
Adjusted Baseline	955,509	3,049	5,107	$ 72,598	$ 44,131	$ 116,729
Audit Period Model	895,336	3,072	4,937	$ 69,001	$ 42,666	$ 111,667
Savings	**60,173**	**(23)**	**170**	**$ 3,597**	**$ 1,466**	**$ 5,062**

	$/kWh	$/kW	$/MMBtu
Electric Rates	$ 0.0615	$ 4.5349	
Gas Rates			$ 8.6421

NOTES:

- Night setback to 60F for HVU-1 Auditorium, HVU-9 Old Gym, AHU-1 1998 Classroom Addition, & AHU-2 1998 Weight Room Addition
- No Sunday operation of equipment in Gyms, Locker Rooms, or Weight Room.
- Night Setback of 2008 Additions, New Gym AHU-1, Weight Room AHU-2, Office Addition AHU-3, and Classroom Addition AHU-4 from current 63F to new 60F setpoint.
- Gas Savings for CO2 Sensor Control for HVU-1 and HVU-9, Old Auditorium, Old Gym
- No Gas Savings for AHU-1 New Gym as CO2 control is already in-place.

ECM 3.1 Control System Totals For All Buildings

	Electricity					
	Consumption (kWh)	Demand (kW)	Gas (MMBtu)	Electric Cost	Gas Cost	Total Cost
Baseline	2,332,215	6,073	16,323	$ 176,839	$ 142,290	$ 319,129
Adjusted Baseline	2,690,235	6,886	17,698	$ 204,777	$ 154,583	$ 359,361
Audit Period Model	2,466,776	6,949	15,403	$ 190,676	$ 134,684	$ 325,360
Savings	**223,459**	**(63)**	**2,294**	**$ 14,101**	**$ 19,900**	**$ 34,001**

ECM 3.1 CO2 Sensor Gas Savings For MPHS, EGMS, & FVES

	Electricity					
	Consumption (kWh)	Demand (kW)	Gas (MMBtu)	Electric Cost	Gas Cost	Total Cost
Baseline	-	-	833	$ -	$ 6,904	$ 6,904
Audit Period Model	-	-	242	$ -	$ 2,002	$ 2,002
Savings	**-**	**-**	**591**	**$ -**	**$ 4,902**	**$ 4,902**

Supporting Data for Baselining Trane Trace 700 Simulation Used in Proposed Energy Savings Calculations

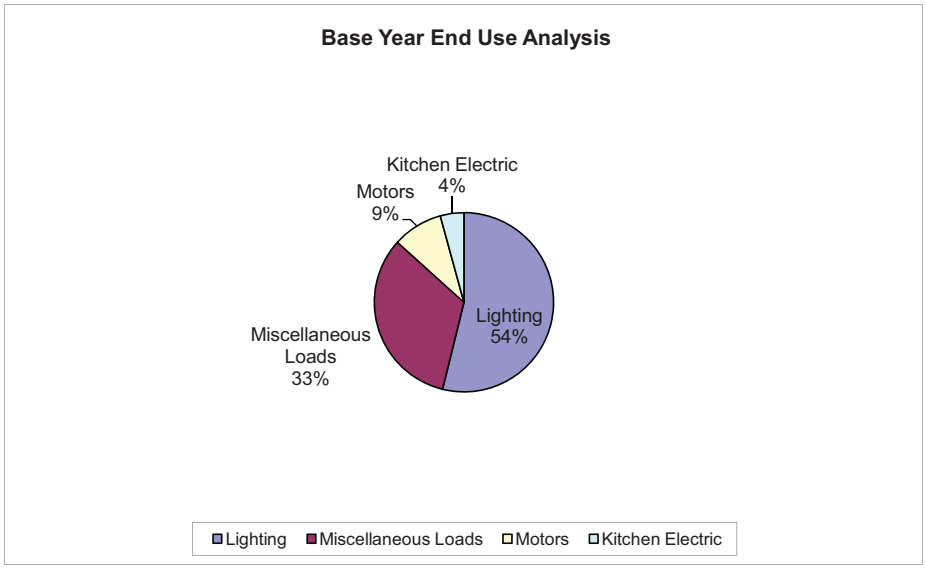

Predicted Base Year End Use Analysis	
Description	**kWh**
Lighting	422,700
Miscellaneous Loads	257,646
Motors	71,197
Kitchen Electric	33,441
Total	**784,984**

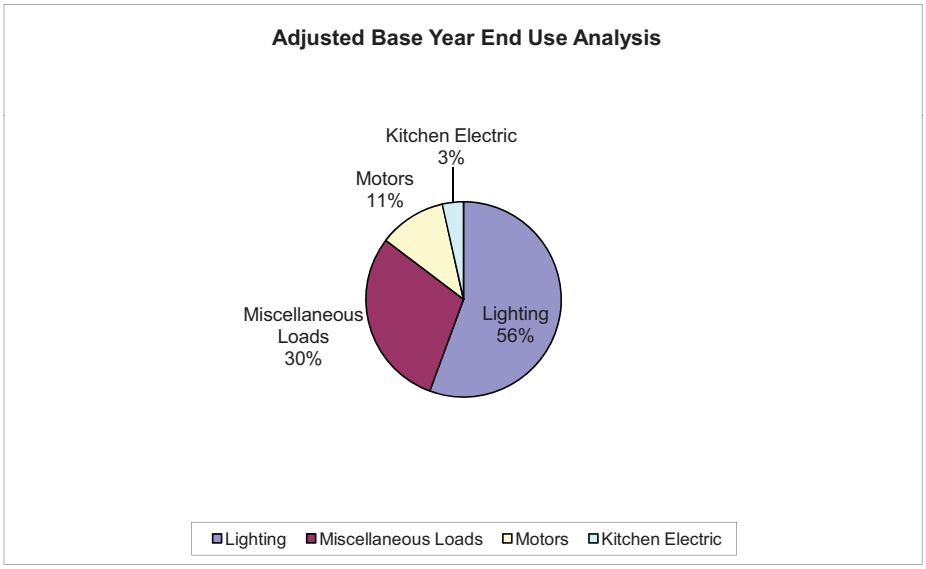

Adjusted Base Year End Use Analysis	
Description	**kWh**
Lighting	531,528
Miscellaneous Loads	284,177
Motors	106,360
Kitchen Electric	33,442
Total	**955,509**

Supporting Data for Baselining Trane Trace 700 Simulation Used in Proposed Energy Savings Calculations

ENERGY SIMULATION CALIBRATION TO BASELINE UTILITY

COMPARISON OF MEASURED AND PREDICTED -- NATURAL GAS

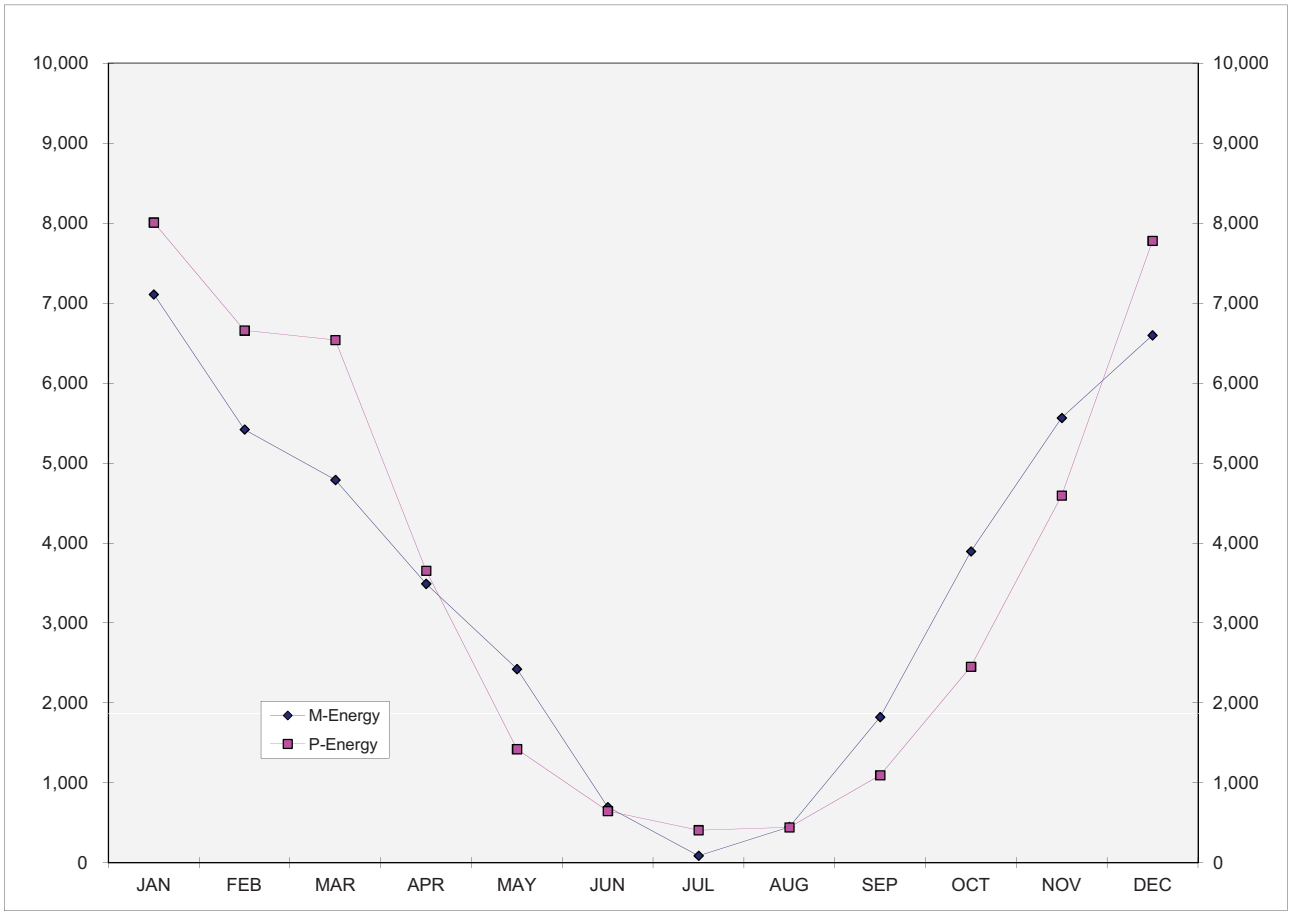

Month	Total Consumption Measured (therms)	Predicted (therms)	Delta (%)
JAN	7,110	8,008	12.6%
FEB	5,420	6,657	22.8%
MAR	4,790	6,539	36.5%
APR	3,490	3,655	4.7%
MAY	2,425	1,423	-41.3%
JUN	700	649	-7.3%
JUL	90	410	355.9%
AUG	450	445	-1.0%
SEP	1,825	1,097	-39.9%
OCT	3,895	2,453	-37.0%
NOV	5,565	4,595	-17.4%
DEC	6,598	7,778	17.9%
Totals	42,358	43,710	3.2%

Supporting Data for Baselining Trane Trace 700 Simulation Used in Proposed Energy Savings Calculations

With 2008 Addition	
Month	Total Consumption Predicted (therms)
JAN	9,282
FEB	7,684
MAR	7,612
APR	4,124
MAY	1,813
JUN	826
JUL	525
AUG	572
SEP	1,407
OCT	2,867
NOV	5,397
DEC	8,959
Totals	51,066

With ASHRAE 62.1 Ventilation Rates (Fully Occupied)	
Month	Total Consumption Predicted (therms)
JAN	7,826
FEB	6,430
MAR	6,381
APR	3,581
MAY	1,395
JUN	645
JUL	410
AUG	445
SEP	1,077
OCT	2,385
NOV	4,453
DEC	7,546
Totals	42,575

With ECM 3.1 Energy Savings	
Month	Total Consumption Predicted (therms)
JAN	8,905
FEB	7,406
MAR	7,298
APR	3,949
MAY	1,824
JUN	854
JUL	528
AUG	583
SEP	1,339
OCT	2,844
NOV	5,189
DEC	8,653
Totals	49,370

Supporting Data for Baselining Trane Trace 700 Simulation Used in Proposed Energy Savings Calculations

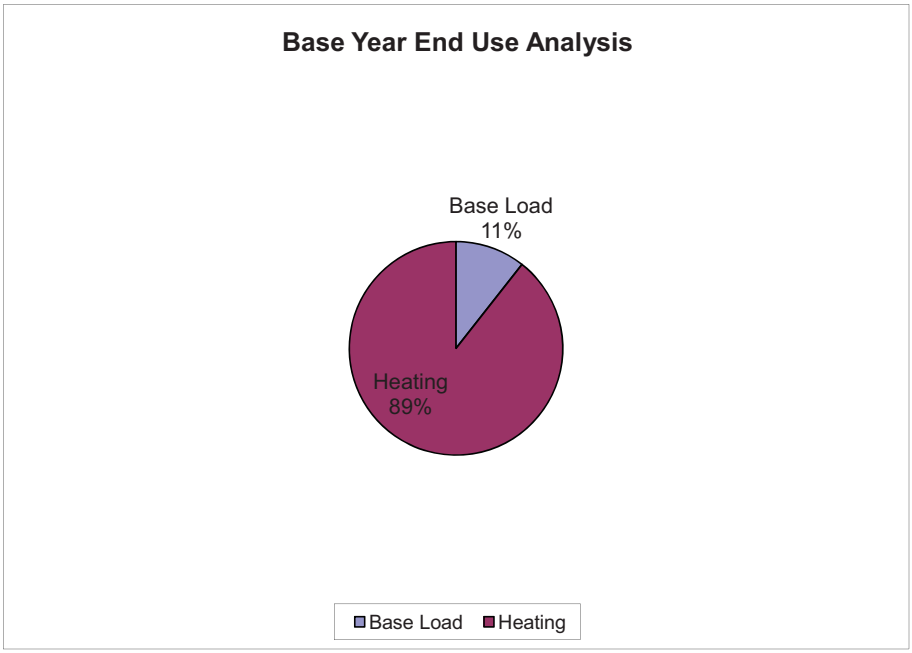

Predicted Base Year End Use Analysis	
Description	**MMBtu**
Base Load	464
Heating	3,907
Total	**4,371**

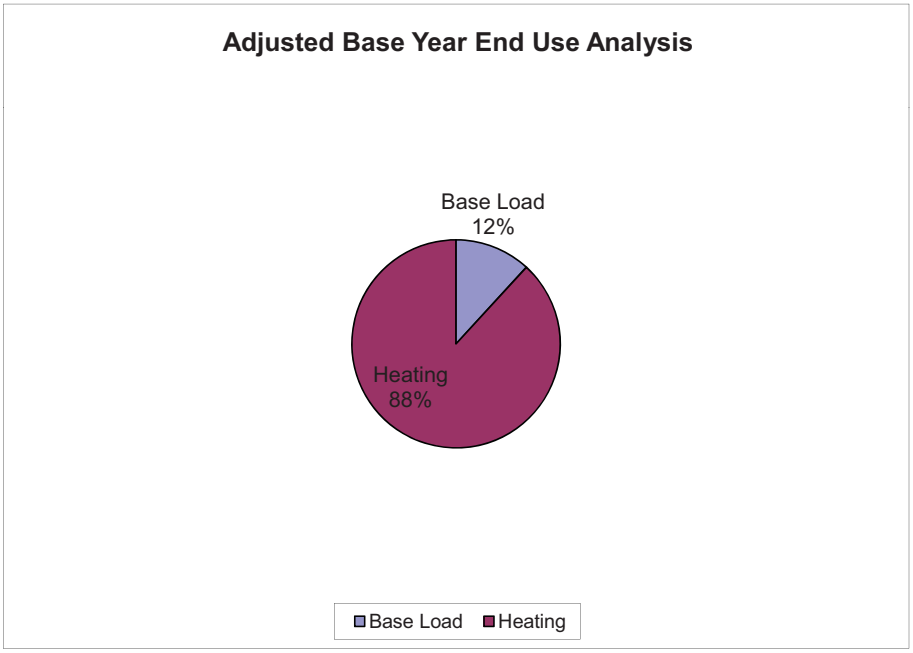

Adjusted Base Year End Use Analysis	
Description	**MMBtu**
Base Load	604
Heating	4,503
Total	**5,107**

Normalized Utility and Weather Data for Fraser Valley Elementary School

Weather Data				Electricity						Natural Gas		
Month	Actual Days	HDD	CDD	kW-hrs/ Day	Nrmlzd kW-hrs	Demand, kW	Demand Charge	Energy & Misc Charge	Nrmlzd Tot Charge	Therms/ Day	Nrmlzd Therms	Nrmlzd Total Charge
Dec-06	31	1,370	-	1,156	35,840	97	$ 377	$ 2,489	$ 2,866	129	3,999	$ 2,801
Jan-07	31	1,526	-	1,280	39,680	102	$ 398	$ 2,787	$ 3,185	129	4,010	$ 2,150
Feb-07	28	1,121	-	1,249	34,973	99	$ 384	$ 2,396	$ 2,780	144	4,020	$ 3,146
Mar-07	31	943	-	1,155	35,795	97	$ 374	$ 2,503	$ 2,878	130	4,020	$ 2,944
Apr-07	30	681	-	1,135	34,065	91	$ 353	$ 2,346	$ 2,699	104	3,110	$ 1,572
May-07	31	494	-	877	27,200	88	$ 341	$ 1,984	$ 2,326	81	2,510	$ 1,635
Jun-07	30	198	10	704	21,120	43	$ 167	$ 1,377	$ 1,543	50	1,490	$ 884
Jul-07	31	18	30	800	24,800	88	$ 341	$ 1,857	$ 2,198	25	790	$ 560
Aug-07	31	48	18	1,169	36,240	100	$ 388	$ 2,526	$ 2,914	32	990	$ 679
Sep-07	30	301	2	1,357	40,720	111	$ 429	$ 2,818	$ 3,247	79	2,370	$ 850
Oct-07	31	690	-	1,298	40,240	107	$ 415	$ 2,774	$ 3,189	99	3,080	$ 1,073
Nov-07	30	968	-	1,373	41,200	114	$ 496	$ 3,158	$ 3,654	114	3,430	$ 1,831
Dec-07	31	1,495	-	1,373	42,562	112	$ 487	$ 2,985	$ 3,472	116	3,610	$ 2,801
Jan-08	31	1,591	-	1,530	47,443	110	$ 479	$ 3,749	$ 4,227	116	3,600	$ 2,753
Feb-08	29	1,306	-	1,404	40,712	107	$ 463	$ 3,021	$ 3,484	111	3,220	$ 2,834
Mar-08	31	1,176	-	1,295	40,160	105	$ 457	$ 3,046	$ 3,503	110	3,410	$ 3,321
Apr-08	30	928	-	1,336	40,080	99	$ 431	$ 2,996	$ 3,426	103	3,080	$ 2,945
May-08	31	605	-	705	21,840	98	$ 424	$ 1,923	$ 2,347	86	2,670	$ 2,926
Jun-08	30	290	-	371	11,143	37	$ 160	$ 852	$ 1,012	69	2,080	$ 2,267
Jul-08	31	56	7	574	17,794	62	$ 270	$ 1,685	$ 1,955	-	-	$ 207
Aug-08	31	115	12	1,095	33,935	108	$ 468	$ 2,716	$ 3,184	-	-	$ 256
Sep-08	30	346	-	1,456	43,680	121	$ 527	$ 3,344	$ 3,871	63	1,900	$ 1,187
Oct-08	31	686	-	1,560	48,360	123	$ 534	$ 3,629	$ 4,164	135	4,200	$ 2,173
Nov-08	30	956	-	1,521	45,640	128	$ 556	$ 3,623	$ 4,179	197	5,900	$ 2,940

Weather data provided by Metrix.
Note that dekatherms have been converted to therms here.

Combined Data for Model Calibration Purposes
EGSD Fraser Valley Elementary School

Monthly gas and electric meter data is averaged for the period December 2006 - November 2008.

Month	Days	kWh/day	Total kWh	Total kW	Therms/day	Total Therms
January	31	1,405	43,562	106	123	3,805
February	28	1,326	37,141	103	127	3,564
March	31	1,225	37,977	101	120	3,715
April	30	1,236	37,072	95	103	3,095
May	31	791	24,520	93	84	2,590
June	30	538	16,131	40	60	1,785
July	31	687	21,297	75	13	395
August	31	1,132	35,087	104	16	495
September	30	1,407	42,200	116	71	2,135
October	31	1,429	44,300	115	117	3,640
November	30	1,447	43,420	121	156	4,665
December	31	1,265	39,201	105	123	3,805
Annual Totals	**365**		**421,909**	**1,172**		**33,689**

Supporting Data for Baselining Trane Trace 700 Simulation Used in Proposed Energy Savings Calculations

ENERGY SIMULATION CALIBRATION TO BASELINE UTILITY

COMPARISON OF MEASURED AND PREDICTED -- ELECTRIC ENERGY AND DEMAND

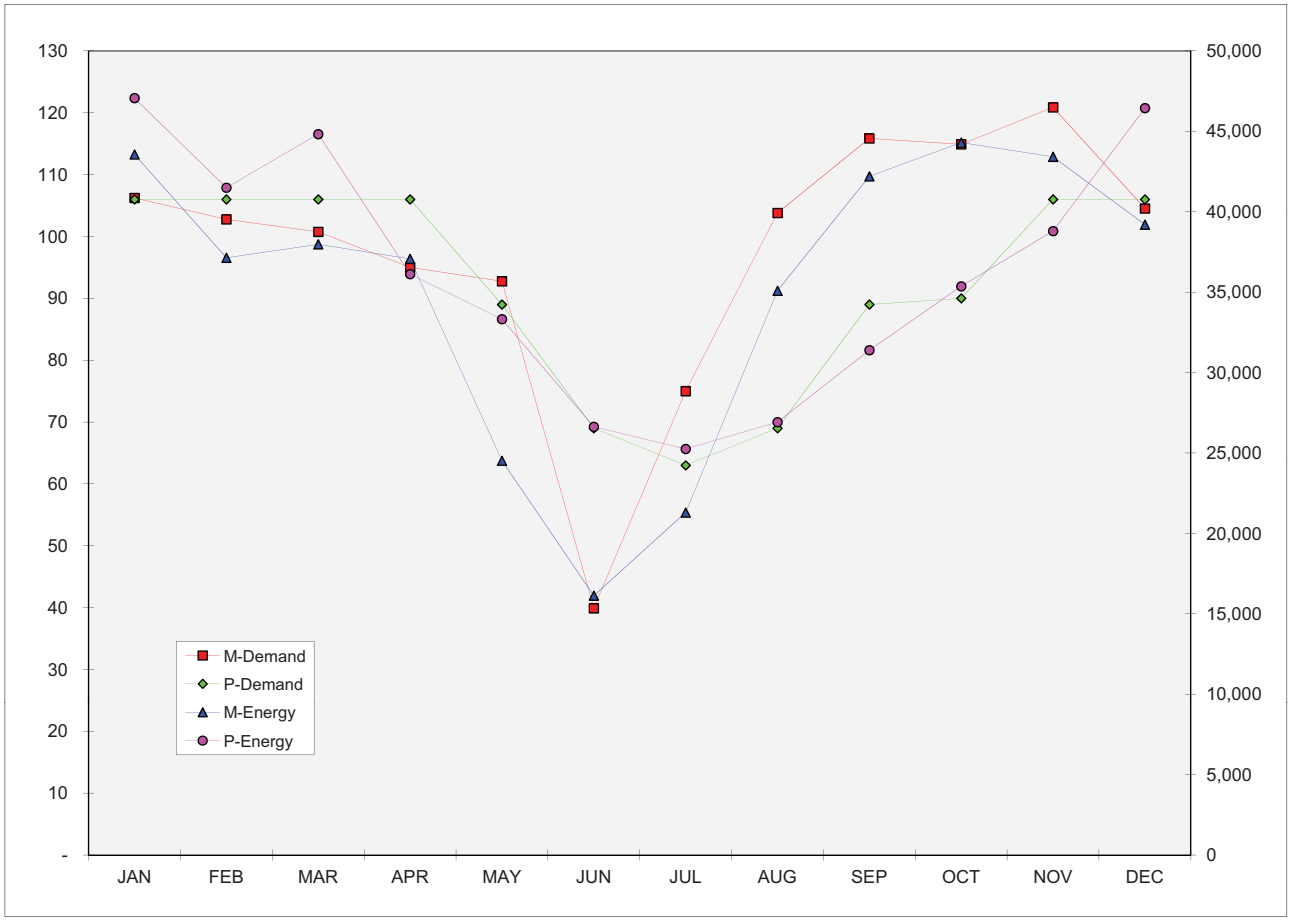

	Maximum Demand			Total Consumption		
Month	Measured (kW)	Predicted (kW)	Delta (%)	Measured (kWh)	Predicted (kWh)	Delta (%)
JAN	106	106	-0.2%	43,562	47,067	8.0%
FEB	103	106	3.1%	37,141	41,496	11.7%
MAR	101	106	5.2%	37,977	44,824	18.0%
APR	95	106	11.6%	37,072	36,123	-2.6%
MAY	93	89	-4.0%	24,520	33,321	35.9%
JUN	40	69	72.9%	16,131	26,630	65.1%
JUL	75	63	-16.0%	21,297	25,250	18.6%
AUG	104	69	-33.5%	35,087	26,920	-23.3%
SEP	116	89	-23.2%	42,200	31,391	-25.6%
OCT	115	90	-21.7%	44,300	35,363	-20.2%
NOV	121	106	-12.3%	43,420	38,797	-10.6%
DEC	105	106	1.4%	39,201	46,444	18.5%
Totals	1,172	1,105	-5.7%	421,909	**433,626**	2.8%
PEAK (kW)	121	106	-12.3%			

Supporting Data for Baselining Trane Trace 700 Simulation Used in Proposed Energy Savings Calculations

Baseline Adjustment for 2008 Square Footage Addition		
Month	Maximum Demand Predicted (kW)	Total Consumption Predicted (kWh)
JAN	128	57,731
FEB	128	51,140
MAR	128	55,573
APR	128	45,690
MAY	110	41,456
JUN	86	32,911
JUL	81	30,363
AUG	86	32,991
SEP	111	39,241
OCT	113	44,483
NOV	128	48,661
DEC	128	57,053
Totals	**1,355**	**537,293**
PEAK (kW)	128	

With ASHRAE 62.1 Ventilation Rates (Fully Occupied)		
Month	Maximum Demand Predicted (kW)	Total Consumption Predicted (kWh)
JAN	128	50,927
FEB	128	45,615
MAR	128	51,120
APR	128	43,079
MAY	110	38,973
JUN	86	31,043
JUL	81	27,636
AUG	86	31,136
SEP	110	36,672
OCT	113	41,629
NOV	128	44,929
DEC	128	50,234
Totals	**1,354**	**492,993**
PEAK (kW)	128	

ECM 3.1 Control System Upgrade

	Electricity					
	Consumption (kWh)	Demand (kW)	Gas (MMBtu)	Electric Cost	Gas Cost	Total Cost
Baseline	433,626	1,105	3,381	$ 30,778	$ 29,222	$ 60,000
Adjusted Baseline	537,293	1,355	3,652	$ 38,072	$ 31,563	$ 69,635
Audit Period Model	492,993	1,354	3,597	$ 35,435	$ 31,087	$ 66,523
Savings	**44,300**	**1**	**55**	**$ 2,637**	**$ 475**	**$ 3,112**

NOTES:

- Night setback to 60F for AHU-1 New Gym, and AHU-2 1998 Classroom Addition
- No Sunday operation of equipment in Gyms, or Locker Rooms.
- Close O.A. Dampers during occupied hours for AHU-1 and AHU-2.

	$/kWh	$/kW	$/MMBtu
Electric Rates	$ 0.0594	$ 4.5349	
Gas Rates			$ 8.6421

Supporting Data for Baselining Trane Trace 700 Simulation Used in Proposed Energy Savings Calculations

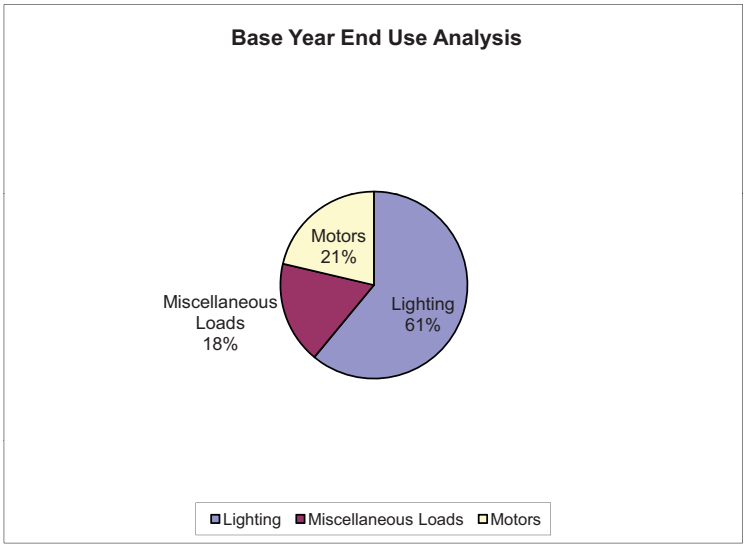

Predicted Base Year End Use Analysis	
Description	**kWh**
Lighting	264,536
Miscellaneous Loads	76,605
Motors	92,485
Total	**433,626**

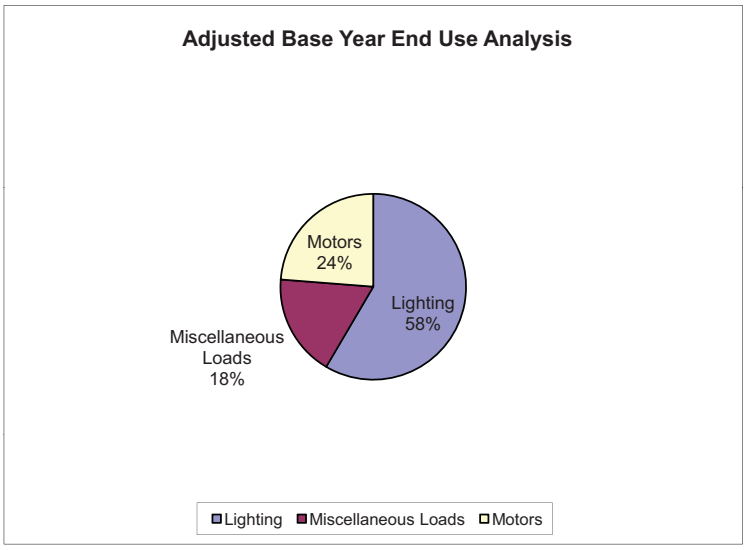

Adjusted Base Year End Use Analysis	
Description	**kWh**
Lighting	314,078
Miscellaneous Loads	95,659
Motors	127,556
Total	**537,293**

Supporting Data for Baselining Trane Trace 700 Simulation Used in Proposed Energy Savings Calculations

ENERGY SIMULATION CALIBRATION TO BASELINE UTILITY

COMPARISON OF MEASURED AND PREDICTED -- NATURAL GAS

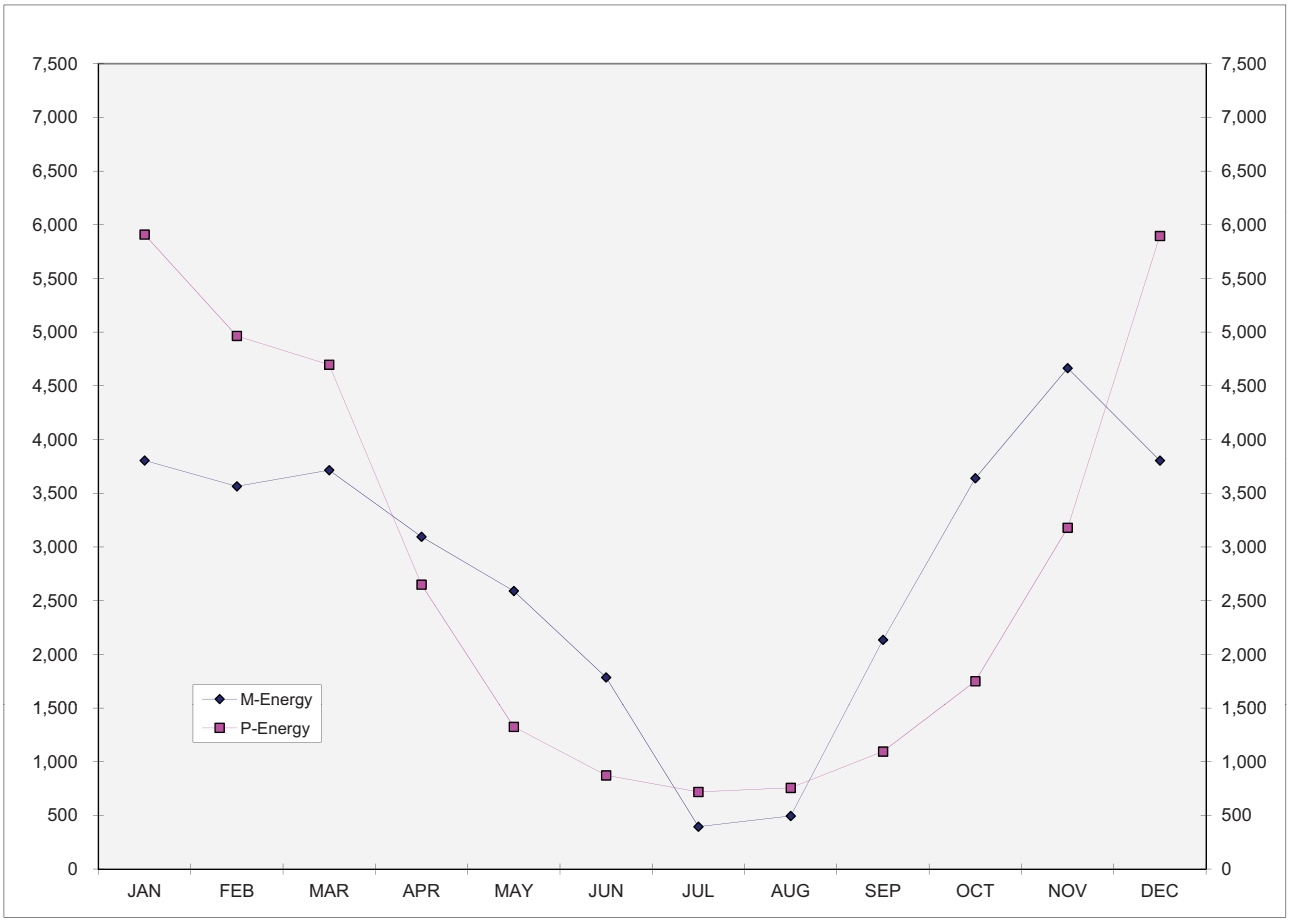

Month	Total Consumption Measured (therms)	Predicted (therms)	Delta (%)
JAN	3,805	5,909	55.3%
FEB	3,564	4,965	39.3%
MAR	3,715	4,697	26.4%
APR	3,095	2,649	-14.4%
MAY	2,590	1,325	-48.8%
JUN	1,785	873	-51.1%
JUL	395	719	82.0%
AUG	495	757	52.9%
SEP	2,135	1,095	-48.7%
OCT	3,640	1,750	-51.9%
NOV	4,665	3,179	-31.9%
DEC	3,805	5,896	55.0%
Total	33,689	33,813	0.4%

Supporting Data for Baselining Trane Trace 700 Simulation Used in Proposed Energy Savings Calculations

With 2008 Addition	
Month	Total Consumption Predicted (therms)
JAN	6,532
FEB	5,487
MAR	5,153
APR	2,796
MAY	1,316
JUN	868
JUL	719
AUG	756
SEP	1,085
OCT	1,752
NOV	3,511
DEC	6,548
Total	36,522

With ECM 3.1 Energy Savings	
Month	Total Consumption Predicted (therms)
JAN	6,120
FEB	5,289
MAR	5,255
APR	2,917
MAY	1,372
JUN	891
JUL	720
AUG	778
SEP	1,075
OCT	1,727
NOV	3,669
DEC	6,160
Total	35,972

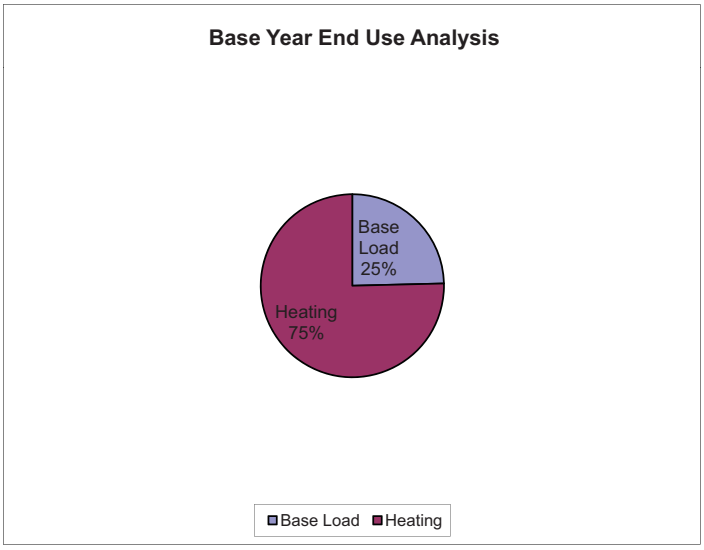

Predicted Base Year End Use Analysis	
Description	MMBtu
Base Load	832
Heating	2,549
Total	**3,381**

Supporting Data for Baselining Trane Trace 700 Simulation Used in Proposed Energy Savings Calculations

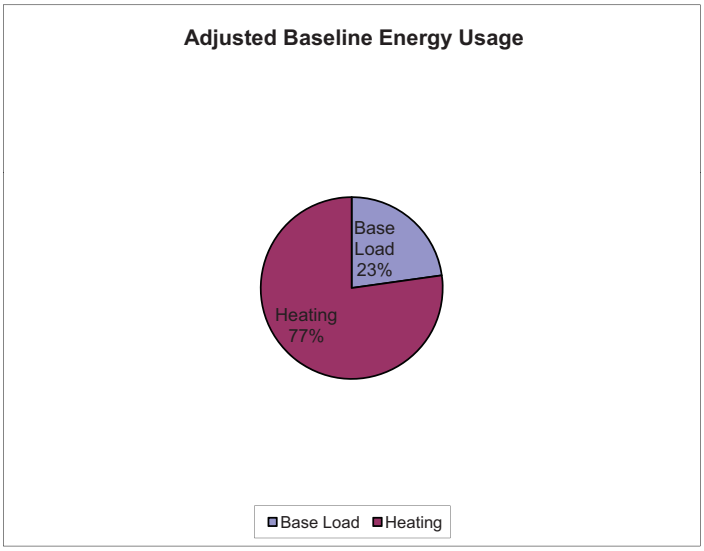

Adjusted Base Year End Use Analysis	
Description	**MMBtu**
Base Load	832
Heating	2,820
Total	**3,652**

Normalized Utility and Weather Data for East Grand Middle School

Weather Data				Electricity						Natural Gas		
Month	Actual Days	HDD	CDD	kW-hrs/ Day	Nrmlzd kW-hrs	Demand, kW	Demand Charge	Energy & Misc Charge	Nrmlzd Tot Charge	Therms/ Day	Nrmlzd Therms	Nrmlzd Total Charge
Dec-06	31	1,370	-	2,844	88,160	235	$ 912	$ 6,117	$ 7,029	219	6,789	$ 4,649
Jan-07	31	1,526	-	3,310	102,610	240	$ 931	$ 6,667	$ 7,598	219	6,800	$ 3,812
Feb-07	28	1,121	-	3,049	85,360	234	$ 908	$ 5,961	$ 6,868	193	5,390	$ 4,193
Mar-07	31	943	-	2,421	75,061	228	$ 885	$ 5,463	$ 6,347	155	4,790	$ 3,357
Apr-07	30	681	-	2,346	70,374	228	$ 885	$ 5,076	$ 5,960	135	4,060	$ 1,998
May-07	31	494	-	1,886	58,480	203	$ 788	$ 4,433	$ 5,220	80	2,470	$ 1,689
Jun-07	30	198	10	1,155	34,640	137	$ 532	$ 2,697	$ 3,228	55	1,650	$ 938
Jul-07	31	18	30	1,055	32,720	92	$ 357	$ 2,351	$ 2,708	33	1,010	$ 684
Aug-07	31	48	18	1,587	49,200	217	$ 842	$ 3,914	$ 4,756	4	110	$ 350
Sep-07	30	301	2	2,227	66,800	223	$ 865	$ 4,898	$ 5,763	49	1,470	$ 892
Oct-07	31	690	-	2,240	69,440	231	$ 896	$ 5,084	$ 5,980	129	4,000	$ 1,323
Nov-07	30	968	-	2,497	74,897	234	$ 908	$ 5,441	$ 6,349	157	4,700	$ 2,434
Dec-07	31	1,495	-	2,780	86,180	239	$ 1,040	$ 6,556	$ 7,596	213	6,590	$ 4,915
Jan-08	31	1,591	-	3,045	94,400	242	$ 1,053	$ 7,013	$ 8,066	218	6,760	$ 5,028
Feb-08	29	1,306	-	2,921	84,720	229	$ 996	$ 6,490	$ 7,486	210	6,080	$ 5,283
Mar-08	31	1,176	-	2,444	75,760	223	$ 970	$ 5,919	$ 6,889	182	5,650	$ 5,332
Apr-08	30	928	-	2,287	68,607	218	$ 948	$ 5,509	$ 6,457	180	5,410	$ 5,224
May-08	31	605	-	2,021	62,640	210	$ 914	$ 4,960	$ 5,874	119	3,690	$ 3,937
Jun-08	30	290	-	1,248	37,440	148	$ 644	$ 3,126	$ 3,770	80	2,400	$ 2,604
Jul-08	31	56	7	1,283	39,763	153	$ 666	$ 3,323	$ 3,988	64	1,980	$ 2,252
Aug-08	31	115	12	1,674	51,909	206	$ 896	$ 4,390	$ 5,286	68	2,120	$ 1,832
Sep-08	30	346	-	2,242	67,273	221	$ 961	$ 5,175	$ 6,136	87	2,610	$ 1,560
Oct-08	31	686	-	2,379	73,739	224	$ 974	$ 5,738	$ 6,713	176	5,450	$ 2,766
Nov-08	30	956	-	2,377	71,303	234	$ 1,018	$ 5,561	$ 6,578	151	4,520	$ 2,090

Weather data provided by Metrix.
Note that dekatherms have been converted to therms here.

Supporting Data for Baselining Trane Trace 700 Simulation Used in Proposed Energy Savings Calculations

ENERGY SIMULATION CALIBRATION TO BASELINE UTILITY

COMPARISON OF MEASURED AND PREDICTED -- ELECTRIC ENERGY AND DEMAND

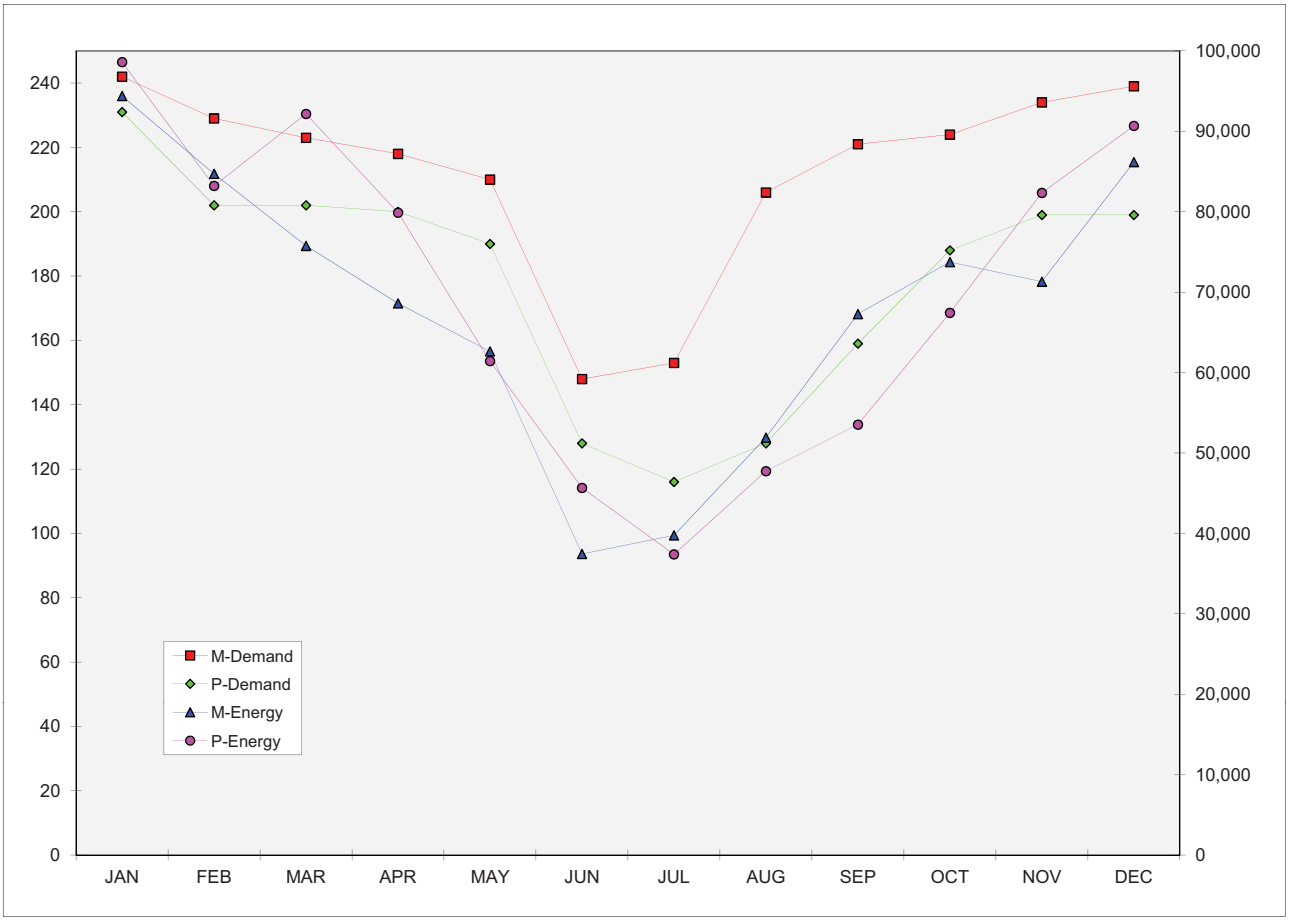

	Maximum Demand			Total Consumption		
Month	Measured (kW)	Predicted (kW)	Delta (%)	Measured (kWh)	Predicted (kWh)	Delta (%)
JAN	242	231	-4.5%	94,400	98,613	4.5%
FEB	229	202	-11.8%	84,720	83,216	-1.8%
MAR	223	202	-9.4%	75,760	92,164	21.7%
APR	218	200	-8.3%	68,607	79,880	16.4%
MAY	210	190	-9.5%	62,640	61,431	-1.9%
JUN	148	128	-13.5%	37,440	45,658	21.9%
JUL	153	116	-24.2%	39,763	37,392	-6.0%
AUG	206	128	-37.9%	51,909	47,737	-8.0%
SEP	221	159	-28.1%	67,273	53,524	-20.4%
OCT	224	188	-16.1%	73,739	67,430	-8.6%
NOV	234	199	-15.0%	71,303	82,346	15.5%
DEC	239	199	-16.7%	86,180	90,678	5.2%
Totals	2,547	2,142	-15.9%	813,733	840,069	3.2%

PEAK (kW)	242	231	-4.5%

Supporting Data for Baselining Trane Trace 700 Simulation Used in Proposed Energy Savings Calculations

With ECM 3.1 Energy Savings		
Month	Maximum Demand Predicted (kW)	Total Consumption Predicted (kWh)
JAN	231	87,610
FEB	202	74,319
MAR	202	83,939
APR	200	66,921
MAY	194	56,002
JUN	133	43,610
JUL	123	37,046
AUG	130	44,015
SEP	170	48,759
OCT	197	57,540
NOV	199	71,026
DEC	199	81,331
Totals	2,180	752,118

PEAK (kW)	231

ECM 3.1 Control System Upgrade

	Electricity					
	Consumption (kWh)	Demand (kW)	Gas (MMBtu)	Electric Cost	Gas Cost	Total Cost
Baseline	840,069	2,142	5,265	$ 61,384	$ 45,500	$ 106,884
Adjusted Baseline	840,069	2,142	5,415	$ 61,384	$ 46,794	$ 108,178
Audit Period Model	752,118	2,180	4,336	$ 56,147	$ 37,471	$ 93,618
Savings	**87,951**	**(38)**	**1,079**	**$ 5,237**	**$ 9,322**	**$ 14,560**

NOTES:

- Night setback to 60F for AHU-4, 5, 6 & 8
- Night Setback to 65F on Classroom Reheat for AHU-1, 2, 7 & 9
- No Sunday operation of equipment in Gyms or Locker Rooms.

	$/kWh	$/kW	$/MMBtu
Electric Rates	$ 0.0615	$ 4.5349	
Gas Rates			$8.6421

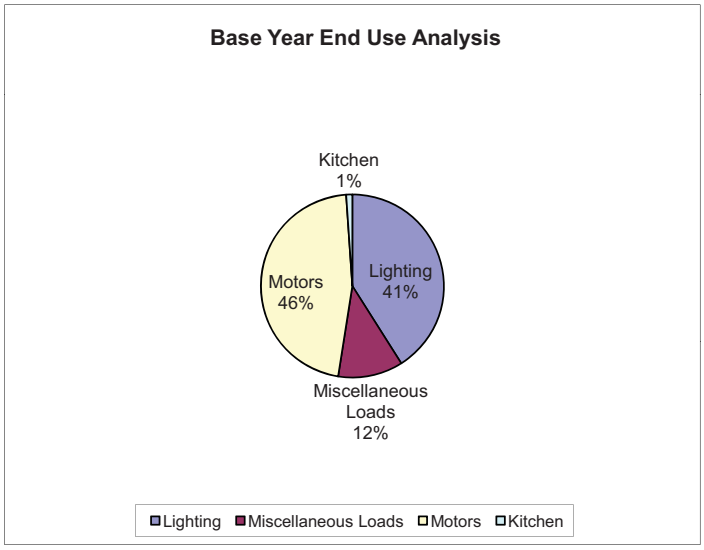

Predicted Base Year End Use Analysis	
Description	kWh
Lighting	344,540
Miscellaneous Loads	96,393
Motors	390,047
Kitchen	9,089
Total	**840,069**

Supporting Data for Baselining Trane Trace 700 Simulation Used in Proposed Energy Savings Calculations

ENERGY SIMULATION CALIBRATION TO BASELINE UTILITY

COMPARISON OF MEASURED AND PREDICTED -- NATURAL GAS

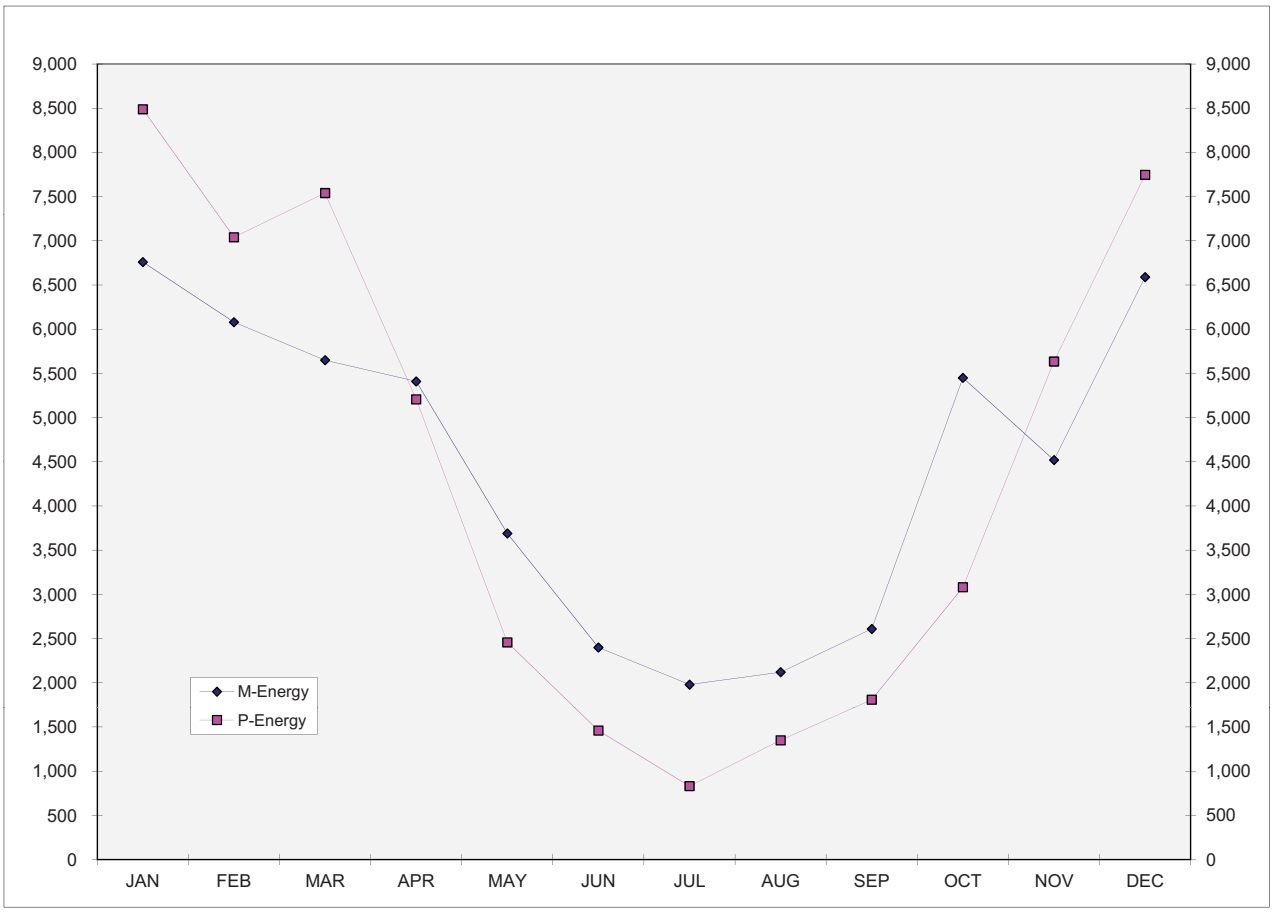

Month	Total Consumption Measured (therms)	Predicted (therms)	Delta (%)
JAN	6,760	8,489	25.6%
FEB	6,080	7,040	15.8%
MAR	5,650	7,541	33.5%
APR	5,410	5,207	-3.8%
MAY	3,690	2,458	-33.4%
JUN	2,400	1,460	-39.2%
JUL	1,980	832	-58.0%
AUG	2,120	1,350	-36.3%
SEP	2,610	1,809	-30.7%
OCT	5,450	3,082	-43.5%
NOV	4,520	5,635	24.7%
DEC	6,590	7,747	17.6%
Total	53,260	52,649	-1.1%

Supporting Data for Baselining Trane Trace 700 Simulation Used in Proposed Energy Savings Calculations

With ECM 3.1 Energy Savings	
Month	Total Consumption Predicted (therms)
JAN	7,150
FEB	6,234
MAR	6,676
APR	4,037
MAY	2,023
JUN	1,095
JUL	707
AUG	850
SEP	1,222
OCT	2,165
NOV	4,506
DEC	6,695
Total	43,359

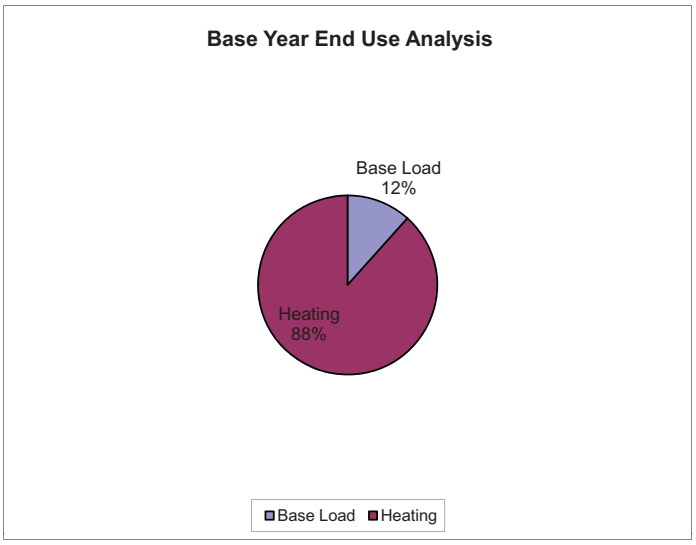

Predicted Base Year End Use Analysis	
Description	MMBtu
Base Load	613
Heating	4,652
Total	**5,265**

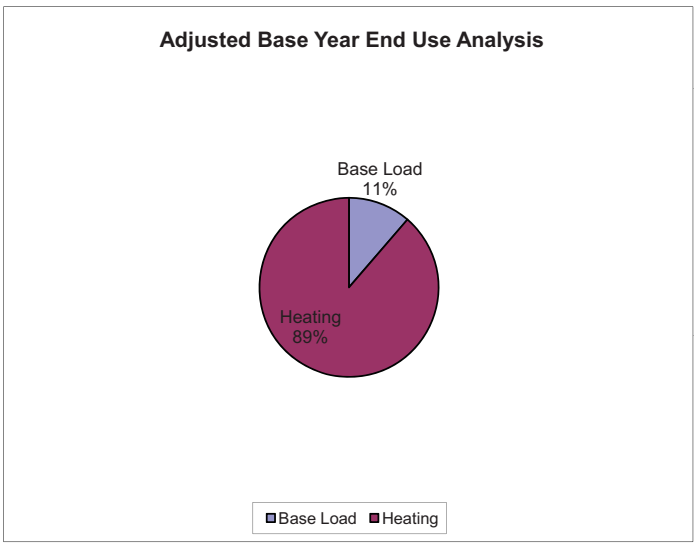

Adjusted Base Year End Use Analysis	
Description	MMBtu
Base Load	613
Heating	4,802
Total	**5,415**

EGSD Grandy Elementary

Honeywell

RTU-1 Base				With 2008 Additions	
Maximum Demand		Total kWh Consumption		Total Gas Consumption	
Month	Predicted (kW)	Month	Predicted (kWh)	Month	Predicted (therms)
JAN	7	JAN	2,311	JAN	278
FEB	7	FEB	2,058	FEB	241
MAR	7	MAR	2,183	MAR	219
APR	7	APR	1,858	APR	102
MAY	7	MAY	1,050	MAY	20
JUN	1	JUN	286	JUN	-
JUL	1	JUL	260	JUL	-
AUG	1	AUG	299	AUG	-
SEP	7	SEP	955	SEP	13
OCT	7	OCT	1,643	OCT	70
NOV	7	NOV	2,059	NOV	157
DEC	7	DEC	2,370	DEC	315
Totals	66	Totals	17,332	Totals	1,415
PEAK (kW)	7				

With ECM 3.1 Energy Savings					
Maximum Demand		Total kWh Consumption		Total Gas Consumption	
Month	Predicted (kW)	Month	Predicted (kWh)	Month	Predicted (kWh)
JAN	7	JAN	1,493	JAN	164
FEB	7	FEB	1,351	FEB	157
MAR	7	MAR	1,635	MAR	176
APR	7	APR	1,305	APR	90
MAY	7	MAY	1,050	MAY	23
JUN	1	JUN	286	JUN	-
JUL	1	JUL	260	JUL	-
AUG	1	AUG	299	AUG	-
SEP	7	SEP	869	SEP	9
OCT	7	OCT	1,235	OCT	55
NOV	7	NOV	1,472	NOV	124
DEC	7	DEC	1,422	DEC	168
Totals	66	Totals	12,677	Totals	966
PEAK (kW)	7				

ECM 3.1 Energy Savings		
Baseline Electric Cost =	$	1,492
Baseline Gas Cost =	$	1,223
Period Electric Cost =	$	1,172
Period Gas Cost =	$	835
kWh Savings =	$	320
kW Savings =	$	-
Gas Savings =	$	388
Total Savings =	$	708
% Savings =		1.6%

Utility Cost Rates		
Electric $/kWh Rate =	$	0.0688
Electric $/kW Rate =	$	4.53
NatGas $/MMBtu Rate =	$	8.6421

Added controls to BAS for 2005 RTU-1, S/S, Night Setback to 60F.

EGSD Grand Lake Elementary

Honeywell

Music/Admin/Gym Base			
Month	Predicted (kW)	Predicted (kWh)	Predicted (therms)
JAN	27	9,432	1,125
FEB	27	8,459	963
MAR	27	9,534	959
APR	27	7,570	494
MAY	25	6,532	179
JUN	15	3,403	63
JUL	15	2,161	9
AUG	15	3,338	48
SEP	15	6,323	170
OCT	27	7,272	349
NOV	27	8,399	671
DEC	27	9,239	1,125
Total	**274**	**81,662**	**6,155**
PEAK (kW)	27		

With ECM 3.1 Energy Savings			
Month	Predicted (kW)	Predicted (kWh)	Predicted (kWh)
JAN	27	9,062	878
FEB	27	7,930	732
MAR	27	8,937	744
APR	27	7,222	362
MAY	25	5,872	122
JUN	12	2,477	2
JUL	12	2,128	0
AUG	12	2,337	1
SEP	27	5,302	109
OCT	27	6,974	245
NOV	27	7,950	499
DEC	27	8,808	840
Total	**277**	**74,999**	**4,534**
PEAK (kW)	27		

ECM 3.1 Energy Savings		
Baseline Electric Cost =	$	7,798
Baseline Gas Cost =	$	5,319
Proposed Electric Cost =	$	7,277
Proposed Gas Cost =	$	3,918
kWh Savings =	$	535
kW Savings =	$	(14)
Gas Savings =	$	1,401
Total Savings =	$	1,922
% Savings =		7.6%

Utility Cost Rates		
Electric $/kWh Rate =	$	0.0803
Electric $/kW Rate =	$	4.53
NatGas $/MMBtu Rate =	$	8.6421

Night setback to 60 F on Gym HVU and Music Room UV.

Normalized Utility and Weather Data for Indian Peaks Charter School

Weather Data				Electricity				Natural Gas		
Month	Actual Days	HDD	CDD	kW-hrs/ Day	Nrmlzd kW-hrs	Energy & Misc Charge	Nrmlzd Tot Charge	Therms/ Day	Nrmlzd Therms	Nrmlzd Total Charge
Dec-06	31	1,370	-	161	4,993	$ 418	$ 418	6	186	$ 180
Jan-07	31	1,526	-	187	5,803	$ 476	$ 476	7	217	$ 191
Feb-07	28	1,121	-	179	5,025	$ 415	$ 415	6	163	$ 157
Mar-07	31	943	-	-	-	$ -	$ -	3	103	$ 113
Apr-07	30	681	-	101	3,015	$ 258	$ 258	3	84	$ 84
May-07	31	494	-	55	1,709	$ 158	$ 158	2	49	$ 58
Jun-07	30	198	10	16	468	$ 63	$ 63	2	49	$ 60
Jul-07	31	18	30	14	430	$ 58	$ 58	0	3	$ 25
Aug-07	31	48	18	42	1,307	$ 127	$ 127	0	1	$ 24
Sep-07	30	301	2	67	2,007	$ 181	$ 181	1	16	$ 33
Oct-07	31	690	-	105	3,246	$ 280	$ 280	-	-	$ -
Nov-07	30	968	-	162	4,873	$ 404	$ 404	4	122	$ 101
Dec-07	31	1,495	-	193	5,974	$ 544	$ 544	7	404	$ 197
Jan-08	31	1,591	-	197	6,103	$ 556	$ 556	8	431	$ 222
Feb-08	29	1,306	-	159	5,832	$ 431	$ 431	7	356	$ 191
Mar-08	31	1,176	-	117	5,525	$ 332	$ 332	5	350	$ 152
Apr-08	30	928	-	91	5,234	$ 269	$ 269	3	284	$ 112
May-08	31	605	-	49	3,733	$ 157	$ 157	2	72	$ 78
Jun-08	30	290	-	15	1,819	$ 59	$ 59	0	3	$ 28
Jul-08	31	56	7	14	2,256	$ 50	$ 50	-	-	$ 22
Aug-08	31	115	12	70	2,172	$ 251	$ 251	0	1	$ 25
Sep-08	30	346	-	128	3,848	$ 358	$ 358	2	59	$ 61
Oct-08	31	686	-	162	5,009	$ 461	$ 461	7	225	$ 185
Nov-08	30	956	-	183	5,499	$ 503	$ 503	13	378	$ 301

Supporting Data for Baselining Trane Trace 700 Simulation Used in Proposed Energy Savings Calculations

ENERGY SIMULATION CALIBRATION TO BASELINE UTILITY

COMPARISON OF MEASURED AND PREDICTED -- ELECTRIC ENERGY AND DEMAND

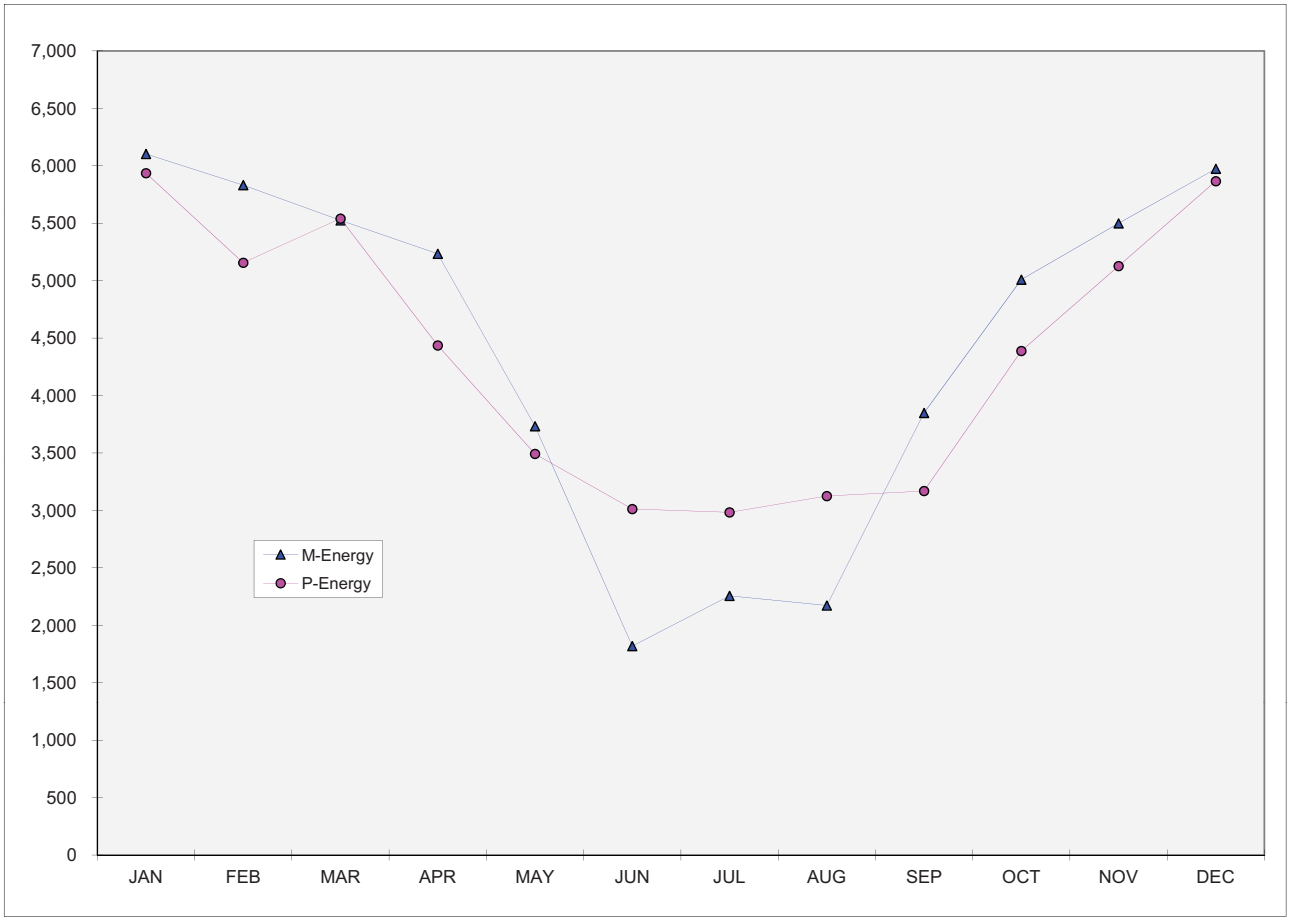

	Total Consumption		
	Measured (kWh)	Predicted (kWh)	Delta (%)
JAN	6,103	5,936	-2.7%
FEB	5,832	5,156	-11.6%
MAR	5,525	5,540	0.3%
APR	5,234	4,436	-15.2%
MAY	3,733	3,492	-6.5%
JUN	1,819	3,012	65.5%
JUL	2,256	2,983	32.2%
AUG	2,172	3,125	43.9%
SEP	3,848	3,169	-17.7%
OCT	5,009	4,388	-12.4%
NOV	5,499	5,127	-6.8%
DEC	5,974	5,866	-1.8%
Totals	53,007	52,230	-1.5%

Baseline Adjustment for 2008 Square Footage Addition	
	Total Consumption Predicted (kWh)
JAN	17,379
FEB	15,310
MAR	16,053
APR	10,457
MAY	7,474
JUN	7,337
JUL	7,183
AUG	7,620
SEP	7,093
OCT	8,912
NOV	13,478
DEC	17,762
Totals	136,058

With ECM 3.1 Energy Savings	
	Total Consumption Predicted (kWh)
JAN	16,055
FEB	13,466
MAR	13,926
APR	9,783
MAY	7,474
JUN	7,337
JUL	7,183
AUG	7,620
SEP	7,093
OCT	8,211
NOV	12,659
DEC	16,362
Totals	127,169

ECM 3.1 Control System Upgrade

Install Webstats For Night Setback to 60 F.

	Electricity					
	Consumption (kWh)	Demand (kW)	Gas (MMBtu)	Electric Cost	Gas Cost	Total Cost
Baseline	52,230		267	$ 4,737	$ 2,809	$ 7,546
Adjusted Baseline	136,058		486	$ 12,340	$ 5,110	$ 17,450
Audit Period Model	127,169		379	$ 11,534	$ 3,989	$ 15,523
Savings	**8,889**		**107**	**$ 806**	**$ 1,121**	**$ 1,928**

	$/kWh	$/kW	$/MMBtu
Electric Rates	$ 0.0907	$ -	
Gas Rates			$ 10.5190

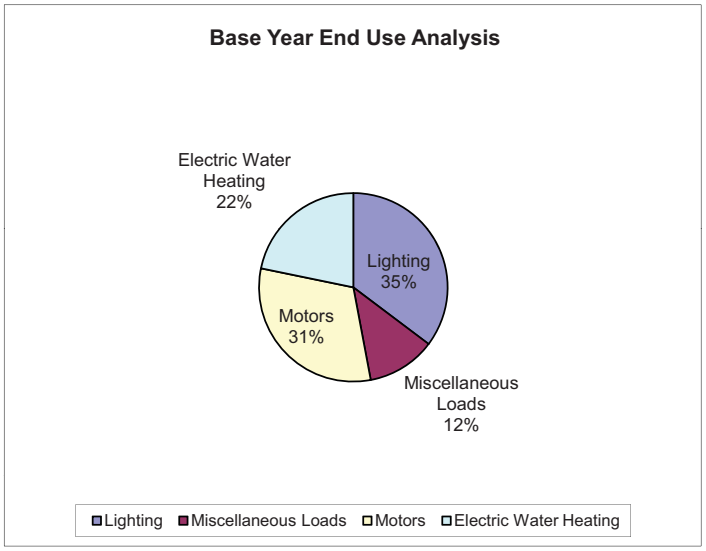

Predicted Base Year End Use Analysis	
Description	**kWh**
Lighting	18,423
Miscellaneous Loads	6,141
Motors	16,298
Electric Water Heating	11,368
Total	**52,230**

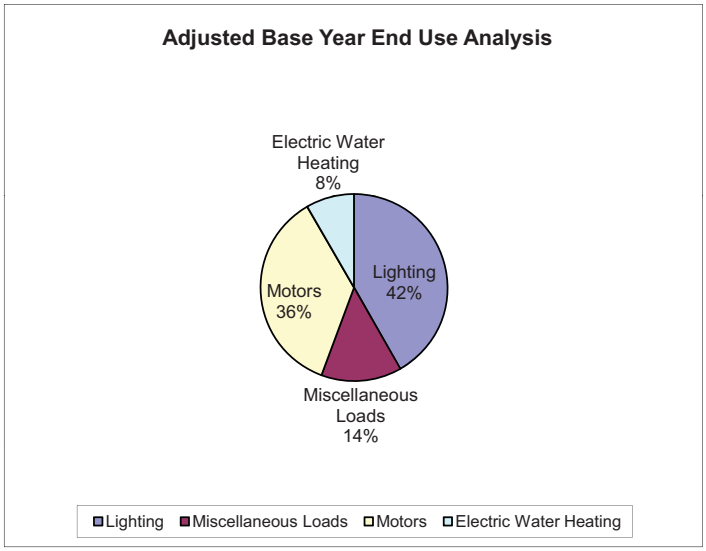

Adjusted Base Year End Use Analysis	
Description	**kWh**
Lighting	56,804
Miscellaneous Loads	18,953
Motors	48,933
Electric Water Heating	11,368
Total	**136,058**

Supporting Data for Baselining Trane Trace 700 Simulation Used in Proposed Energy Savings Calculations

ENERGY SIMULATION CALIBRATION TO BASELINE UTILITY

COMPARISON OF MEASURED AND PREDICTED -- NATURAL GAS

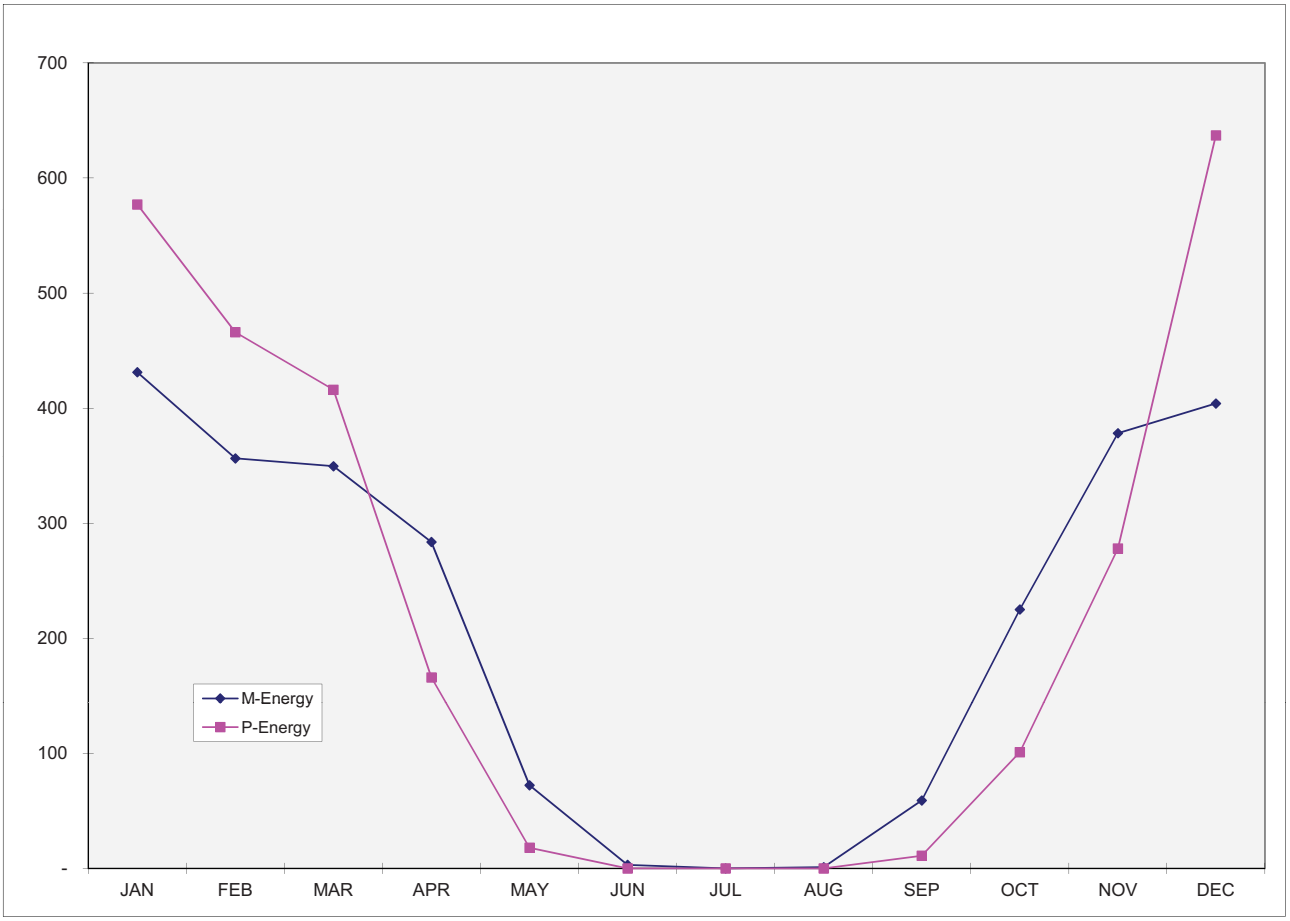

Month	Total Consumption Measured (therms)	Predicted (therms)	Delta (%)
JAN	431	577	33.8%
FEB	356	466	30.8%
MAR	350	416	19.0%
APR	284	166	-41.5%
MAY	72	18	-75.1%
JUN	3	-	-100.0%
JUL	-	-	#DIV/0!
AUG	1	-	-100.0%
SEP	59	11	-81.4%
OCT	225	101	-55.1%
NOV	378	278	-26.5%
DEC	404	637	57.7%
Totals	2,564	2,670	4.2%

Supporting Data for Baselining Trane Trace 700 Simulation Used in Proposed Energy Savings Calculations

With 2008 Addition	
Month	Total Consumption Predicted (therms)
JAN	1,137
FEB	941
MAR	794
APR	183
MAY	-
JUN	-
JUL	-
AUG	-
SEP	2
OCT	42
NOV	451
DEC	1,308
Totals	4,858

With ECM 3.1 Energy Savings	
Month	Total Consumption Predicted (therms)
JAN	929
FEB	728
MAR	577
APR	129
MAY	-
JUN	-
JUL	-
AUG	-
SEP	2
OCT	33
NOV	325
DEC	1,069
Totals	3,792

Supporting Data for Baselining Trane Trace 700 Simulation Used in Proposed Energy Savings Calculations

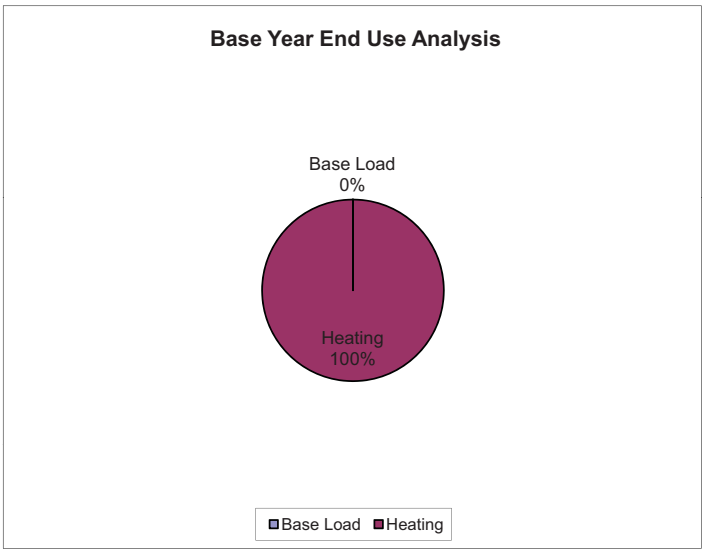

Predicted Base Year End Use Analysis	
Description	MMBtu
Base Load	-
Heating	267

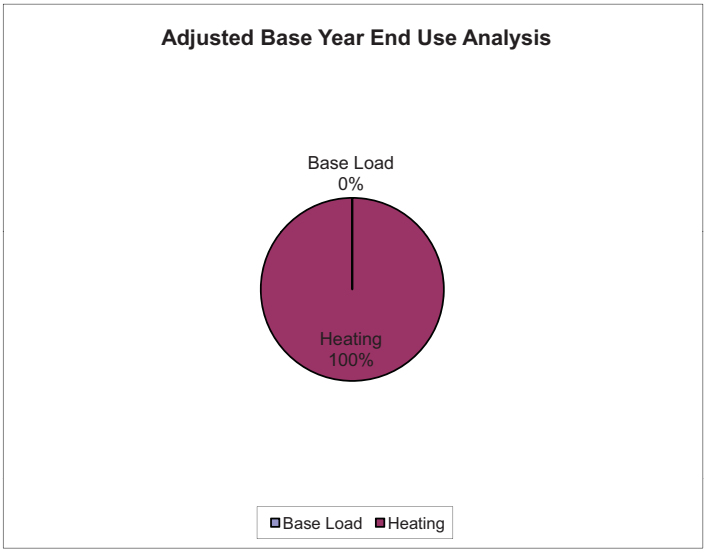

Predicted Baseline Energy Usage	
Description	MMBtu
Base Load	-
Heating	486

Normalized Utility and Weather Data for District Office

Weather Data				Electricity				Natural Gas		
Month	Actual Days	HDD	CDD	kW-hrs/ Day	Nrmlzd kW-hrs	Energy & Misc Charge	Nrmlzd Tot Charge	Therms/ Day	Nrmlzd Therms	Nrmlzd Total Charge
Dec-06	31	1,370	-	171	5,303	$ 437	$ 437	34	1,057	$ 888
Jan-07	31	1,526	-	178	5,519	$ 452	$ 452	41	1,280	$ 990
Feb-07	28	1,121	-	192	5,387	$ 442	$ 442	36	997	$ 827
Mar-07	31	943	-	161	5,000	$ 416	$ 416	24	758	$ 654
Apr-07	30	681	-	145	4,339	$ 363	$ 363	16	481	$ 368
May-07	31	494	-	158	4,902	$ 407	$ 407	11	356	$ 279
Jun-07	30	198	10	144	4,329	$ 365	$ 365	5	161	$ 122
Jul-07	31	18	30	129	4,009	$ 336	$ 336	3	87	$ 67
Aug-07	31	48	18	144	4,449	$ 369	$ 369	3	82	$ 70
Sep-07	30	301	2	166	4,991	$ 414	$ 414	5	161	$ 115
Oct-07	31	690	-	165	5,117	$ 422	$ 422	12	387	$ 215
Nov-07	30	968	-	160	4,796	$ 396	$ 396	17	496	$ 333
Dec-07	31	1,495	-	184	5,707	$ 529	$ 529	33	1,009	$ 784
Jan-08	31	1,591	-	207	6,423	$ 582	$ 582	37	1,132	$ 917
Feb-08	29	1,306	-	208	6,026	$ 560	$ 560	37	1,087	$ 949
Mar-08	31	1,176	-	190	5,900	$ 551	$ 551	33	1,025	$ 916
Apr-08	30	928	-	166	4,978	$ 464	$ 464	27	801	$ 740
May-08	31	605	-	150	4,647	$ 429	$ 429	14	420	$ 445
Jun-08	30	290	-	154	4,605	$ 427	$ 427	8	247	$ 292
Jul-08	31	56	7	146	4,541	$ 418	$ 418	4	131	$ 160
Aug-08	31	115	12	173	5,352	$ 492	$ 492	4	134	$ 164
Sep-08	30	346	-	171	5,139	$ 472	$ 472	5	155	$ 182
Oct-08	31	686	-	181	5,612	$ 515	$ 515	13	394	$ 294
Nov-08	30	956	-	185	5,562	$ 504	$ 504	24	706	$ 521

Weather data provided by Metrix.
Note that dekatherms have been converted to therms here.

Combined Data for Model Calibration Purposes:
EGSD District Office

Monthly gas and electric meter data is averaged for the period December 2006 - November 2008

Month	Days	kWh/day	Total kWh	Therms/day	Total Therms
January	31	193	5,971	39	1,206
February	28	200	5,602	37	1,023
March	31	176	5,450	29	891
April	30	155	4,658	21	641
May	31	154	4,775	13	388
June	30	149	4,467	7	204
July	31	138	4,275	4	109
August	31	158	4,901	3	108
September	30	169	5,065	5	158
October	31	173	5,365	13	390
November	30	173	5,179	20	601
December	31	178	5,505	33	1,033
Annual Totals	**365**		**61,213**		**6,752**

Supporting Data for Baselining Trane Trace 700 Simulation Used in Proposed Energy Savings Calculations

ENERGY SIMULATION CALIBRATION TO BASELINE UTILITY

COMPARISON OF MEASURED AND PREDICTED -- ELECTRIC ENERGY AND DEMAND

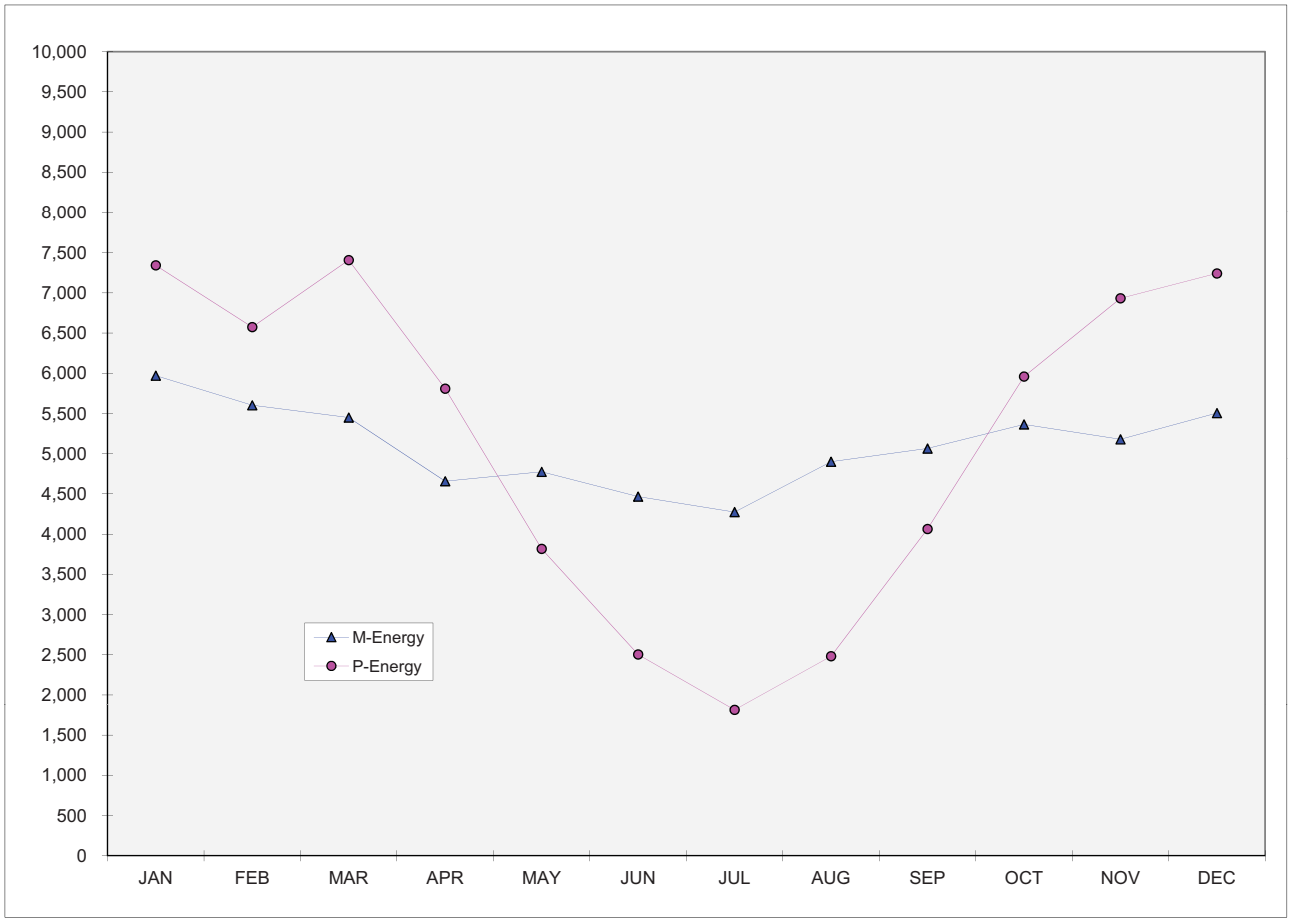

	Total Consumption Averaged Data		
	Measured (kWh)	Predicted (kWh)	Delta (%)
JAN	5,971	7,343	23.0%
FEB	5,602	6,575	17.4%
MAR	5,450	7,408	35.9%
APR	4,658	5,809	24.7%
MAY	4,775	3,817	-20.1%
JUN	4,467	2,504	-43.9%
JUL	4,275	1,815	-57.5%
AUG	4,901	2,482	-49.4%
SEP	5,065	4,064	-19.8%
OCT	5,365	5,960	11.1%
NOV	5,179	6,933	33.9%
DEC	5,505	7,242	31.6%
Totals	61,213	61,952	1.2%

Supporting Data for Baselining Trane Trace 700 Simulation Used in Proposed Energy Savings Calculations

With ECM 3.1 Energy Savings	
	Total Consumption Predicted (kWh)
JAN	7,260
FEB	6,504
MAR	7,318
APR	5,729
MAY	2,505
JUN	1,969
JUL	1,713
AUG	2,082
SEP	2,878
OCT	5,897
NOV	6,853
DEC	7,166
Totals	57,874

ECM 3.1 Control System Upgrade

Install Webstats For Night Setback to 60F.

	Electricity					
	Consumption (kWh)	Demand (kW)	Gas (MMBtu)	Electric Cost	Gas Cost	Total Cost
Baseline	61,952		690	$ 5,619	$ 6,981	$ 12,600
Audit Period Model	57,874		636	$ 5,249	$ 6,439	$ 11,688
Savings	4,078		54	$ 370	$ 542	$ 912

	$/kWh	$/kW	$/MMBtu
Electric Rates	$ 0.0907	$ -	
Gas Rates			$ 10.1227

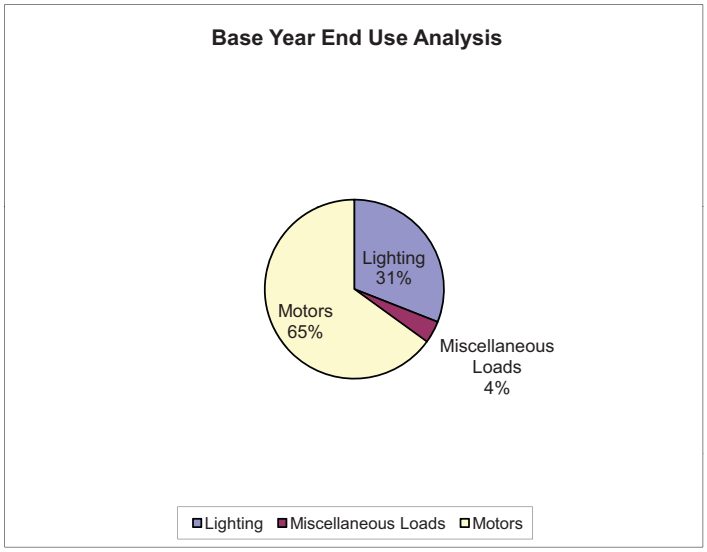

Predicted Base Year End Use Analysis	
	kWh
Lighting	19,188
Miscellaneous Loads	2,477
Motors	40,286
Total	**61,951**

Supporting Data for Baselining Trane Trace 700 Simulation Used in Proposed Energy Savings Calculations

ENERGY SIMULATION CALIBRATION TO BASELINE UTILITY

COMPARISON OF MEASURED AND PREDICTED -- NATURAL GAS

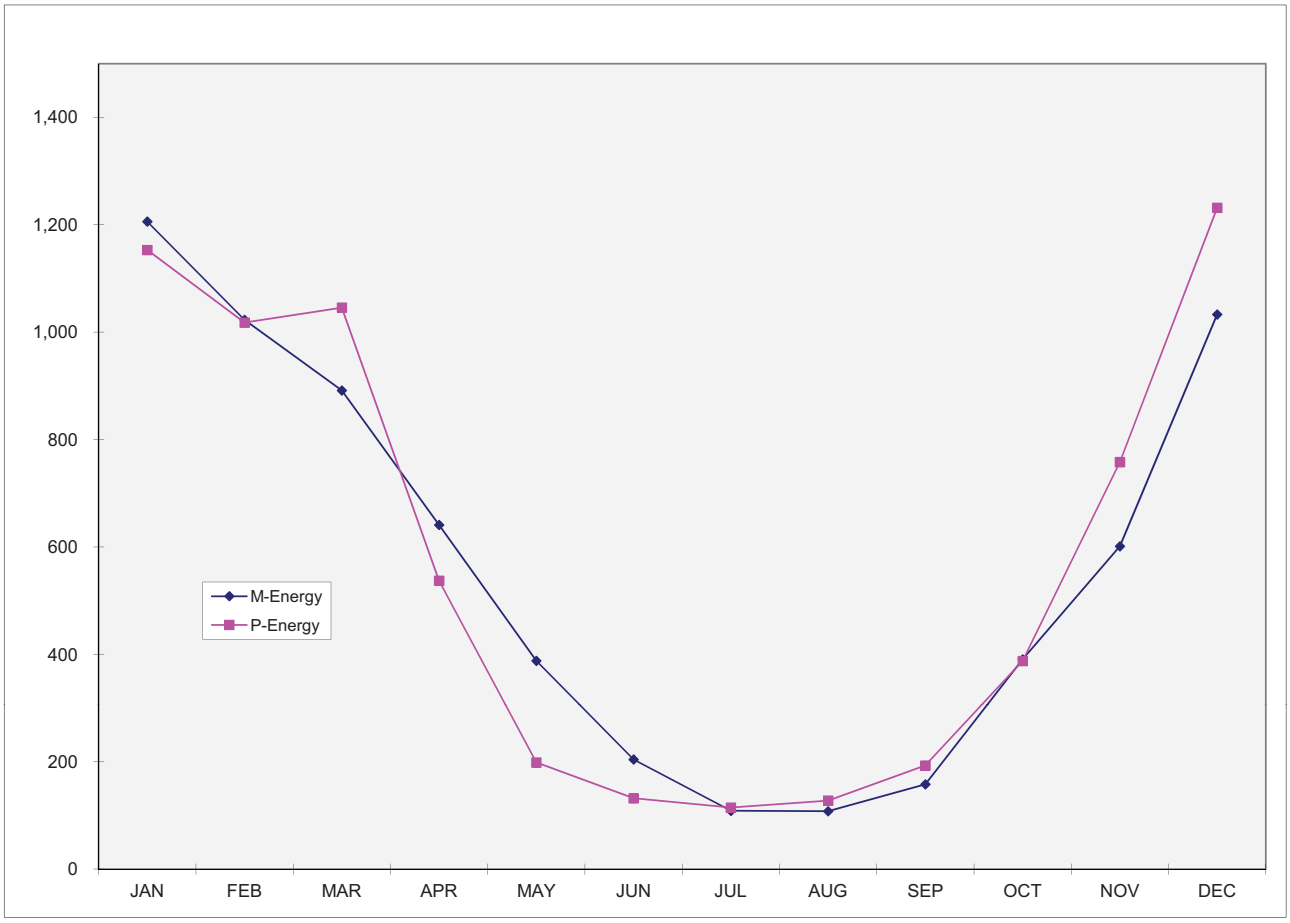

Total Consumption Averaged Data

Month	Measured (therms)	Predicted (therms)	Delta (%)
JAN	1,206	1,153	-4.4%
FEB	1,023	1,018	-0.5%
MAR	891	1,046	17.3%
APR	641	537	-16.2%
MAY	388	199	-48.8%
JUN	204	132	-35.3%
JUL	109	115	5.4%
AUG	108	128	18.4%
SEP	158	193	22.2%
OCT	390	388	-0.7%
NOV	601	758	26.1%
DEC	1,033	1,232	19.2%
Totals	6,752	6,896	2.1%

Supporting Data for Baselining Trane Trace 700 Simulation Used in Proposed Energy Savings Calculations

With ECM 3.1 Energy Savings	
Month	Total Consumption Predicted (therms)
JAN	1,177
FEB	951
MAR	959
APR	463
MAY	150
JUN	114
JUL	112
AUG	119
SEP	146
OCT	329
NOV	682
DEC	1,162
Totals	6,361

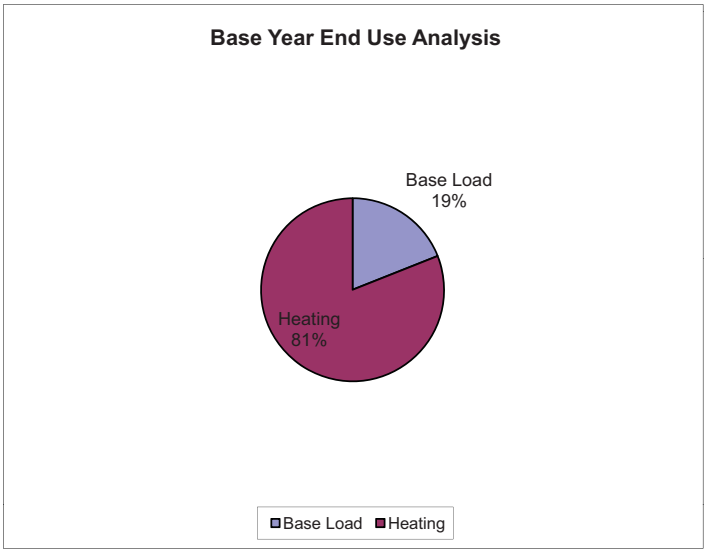

Predicted Base Year End Use Analysis	
	MMBtu
Base Load	131
Heating	559
Total	**690**

Bays & Offices Base

Month	Maximum Demand Predicted (kW)	Month	Total Elec Consumption Predicted (kWh)	Month	Total Gas Consumption Predicted (therms)
JAN	18	JAN	7,947	JAN	1,479
FEB	18	FEB	6,975	FEB	1,270
MAR	18	MAR	7,700	MAR	1,248
APR	17	APR	5,765	APR	590
MAY	12	MAY	3,126	MAY	180
JUN	10	JUN	2,498	JUN	86
JUL	7	JUL	1,639	JUL	11
AUG	10	AUG	2,501	AUG	56
SEP	13	SEP	3,172	SEP	171
OCT	15	OCT	4,724	OCT	369
NOV	18	NOV	6,540	NOV	783
DEC	18	DEC	7,773	DEC	1,346
Totals	174	Totals	60,360	Totals	7,589
PEAK (kW)	18				

With ECM 3.1 Energy Savings

Month	Maximum Demand Predicted (kW)	Month	Total kWh Consumption Predicted (kWh)	Month	Total Gas Consumption Predicted (kWh)
JAN	18	JAN	7,301	JAN	1,452
FEB	18	FEB	6,240	FEB	1,242
MAR	18	MAR	6,992	MAR	1,213
APR	17	APR	5,024	APR	546
MAY	13	MAY	2,794	MAY	163
JUN	10	JUN	2,248	JUN	68
JUL	7	JUL	1,452	JUL	9
AUG	10	AUG	2,021	AUG	40
SEP	13	SEP	2,673	SEP	137
OCT	16	OCT	4,045	OCT	307
NOV	18	NOV	5,778	NOV	748
DEC	18	DEC	7,042	DEC	1,337
Totals	176	Totals	53,610	Totals	7,262
PEAK (kW)	18				

ECM 3.1 Energy Savings		
Baseline Electric Cost =	$	5,475
Baseline Gas Cost =	$	6,559
Period Electric Cost =	$	4,862
Period Gas Cost =	$	6,276
kWh Savings =	$	612
kW Savings =	$	-
Gas Savings =	$	283
Total Savings =	$	895
% Savings =		4.1%

Utility Cost Rates		
Electric $/kWh Rate =	$	0.0907
Electric $/kW Rate =	$	-
NatGas $/MMBtu Rate =	$	8.6421

Install Webstats For Night Setback from 65 to 60F for Bay MAU-1, 2, & 3.

Install Webstats For Night Setback from 70 to 60F for Office AHU-1, 2, & 3.

< Blank Page >

ECM 5.1 - LIGHTING RETROFIT PROJECT SUMMARY
Determination of Cost Avoidance/Savings
Audit Year 2

I. Summary by Building (Annual) East Grand School District

LOCATION	Original Scope # FIXT	CO3 Scope # FIXT	Total # FIXT	Original Scope SAVINGS	CO3 Scope SAVINGS	Total SAVINGS
Middle Park High School	1,345	395	1,740	$ 7,876.59	$ 1,776.22	$ 9,652.82
East Grand Middle School	1,169	84	1,253	$ 11,352.60	$ 147.04	$ 11,499.65
Granby Elementary School	736	511	1,247	$ 4,324.68	$ 2,307.01	$ 6,631.68
Indian Peaks Charter School	109	66	175	$ 629.80	$ 67.04	$ 696.85
District Office	112	37	149	$ 923.41	$ 166.84	$ 1,090.25
Transportation Facility	118	77	195	$ 935.53	$ 185.81	$ 1,121.33
Grand Lake Elementary School	269	41	310	$ 3,712.27	$ 291.49	$ 4,003.76
Fraser Valley Elementary School	676	301	977	$ 4,464.56	$ 1,312.85	$ 5,777.41
Totals	4,534	1,512	6,046	$ 34,219.44	$ 6,254.31	$ 40,473.75

II. Summary of Detailed Energy Analysis By Facility (Annual)

Location Details	Electricity					
	Original Scope Demand (kW)	CO3 Scope Demand (kW)	Total Demand (kW)	Original Scope Consumption (kWh)	CO3 Scope Consumption (kWh)	Total Consumption (kWh)
MPHS Baseline	1,305.2	31.7	1,336.9	311,744	74,706	386,450
MPHS Post-Installation	923.9	19.5	943.5	211,797	46,725	258,522
MPHS Savings	381.3	12.2	393.5	99,948	27,980	127,928
EGMS Baseline	1,125.8	3.2	1,129.0	316,313	8,351	324,663
EGMS Post-Installation	575.2	2.2	577.4	172,339	6,030	178,368
EGMS Savings	550.6	0.9	551.6	143,974	2,321	146,295
GES Baseline	648.1	37.6	685.8	148,645	99,809	248,454
GES Post-Installation	449.0	25.0	474.0	98,915	67,115	166,030
GES Savings	199.1	12.7	211.8	49,731	32,694	82,425
IPCS Baseline	123.9	3.8	127.8	16,969	6,125	23,094
IPCS Post-Installation	71.9	3.4	75.2	10,025	5,386	15,410
IPCS Savings	52.1	0.5	52.5	6,944	739	7,683
DO Baseline	118.7	2.3	121.0	22,442	3,654	26,095
DO Post-Installation	66.2	1.2	67.3	12,261	1,814	14,075
DO Savings	52.5	1.1	53.6	10,181	1,839	12,021
TF Baseline	139.4	1.9	141.3	30,144	4,896	35,039
TF Post-Installation	88.8	1.1	89.8	19,829	2,847	22,676
TF Savings	50.6	0.9	51.5	10,315	2,049	12,363
GLES Baseline	295.4	3.6	298.9	67,937	7,375	75,312
GLES Post-Installation	141.1	2.0	143.1	30,406	3,832	34,239
GLES Savings	154.3	1.6	155.8	37,531	3,543	41,073
FVES Baseline	658.9	22.0	680.9	164,356	59,320	223,676
FVES Post-Installation	458.3	14.1	472.3	104,536	37,835	142,371
FVES Savings	200.7	8.0	208.6	59,819	21,485	81,305
Total Baseline	4,415.5	106.1	4,521.6	1,078,550	264,235	1,342,784
Total Post-Installation	2,774.3	68.4	2,842.7	660,107	171,584	831,691
Total Savings	1,641.2	37.8	1,679.0	418,443	92,651	511,094
	(kW) Original Scope	(kW) CO3 Scope	(kW) Combined	(kWh) Original Scope	(kWh) CO3 Scope	(kWh) Combined

BUILDING:	Middle Park High School	
LIGHTING CONTRACTOR:	RetroTech Systems	
ELECTRIC CONSUMPTION RATE:	$0.0615	per kWh
ELECTRIC DEMAND RATE:	$4.5349	per kW
HEATING FUEL RATE:	$8.6421	per MMBtu

ECM 5.1: Lighting System Upgrades

		PRE-RETROFIT					POST-RETROFIT ("AS-BUILT")							
AREA	USAGE TYPE	EXISTING FIXTURE DESCRIPTION	ANNUAL HOURS	Demand Div Factor	QTY	WATTS EACH*	RETROFIT DESCRIPTION	ANNUAL HOURS	Demand Div Factor	QTY	WATTS EACH**	TOTAL KW SAVED	KWH SAVED PER YR	ANNUAL MONETARY SAVINGS
ENTRY VESTIBULE	Halls High School	1L42CF	4163	100%	2	42	NO RETRO	4163	100%	2	42	-	-	$ -
MAIN OFFICE	Common Admin	2L4T8-SP	2250	100%	4	58	NO RETRO	2250	100%	4	58	-	-	$ -
MAIN OFFICE	Common Admin	2L4T8-SP	2250	100%	1	58	2L4T8-SP-PCDIM	1875	50%	1	58	0.029	22	$ 2.92
MAIN OFFICE	Common Admin	3L4T8-SP	2250	100%	2	85	NO RETRO	2250	100%	2	85	-	-	$ -
MAIN OFFICE	Common Admin	3L4T8-SP	2250	100%	2	85	3L4T8-SP-PCDIM	1875	50%	2	96	0.074	23	$ 5.41
COPY AREA	Common Admin	2L4T8-SP	2250	100%	2	58	NO RETRO	2250	100%	2	58	-	-	$ -
COPY AREA	Common Admin	3L4T8-SP	2250	100%	1	85	NO RETRO	2250	100%	1	85	-	-	$ -
CONFERENCE ROOM	Conference	3L4T8-SP-DUAL	2250	40%	3	90	3L4T8-SP-DUAL-NR-OS	1575	30%	3	90	0.027	182	$ 12.68
CONFERENCE ROOM	Conference	NOTHING	2250	40%	1	0	WSIR	2250	40%	1	0	-	-	$ -
PRINCIPAL OFFICE 101B	Offices, Private	3L4T8-SP-DUAL	2250	50%	4	90	3L4T8-SP-DUAL-NR-OS	1575	38%	4	90	0.045	243	$ 17.40
PRINCIPAL OFFICE 101B	Offices, Private	NOTHING	2250	50%	1	0	WSDT	2250	50%	1	0	-	-	$ -
ASST PRINCIPAL 101C	Offices, Private	3L4T8-SP-DUAL	2250	50%	3	90	3L4T8-SP-DUAL-NR-OS	1008	38%	3	90	0.034	335	$ 22.46
ASST PRINCIPAL 101C	Offices, Private	NOTHING	2250	50%	1	0	WSDT	1575	50%	1	0	-	-	$ -
ELECTRIC ROOM	Mechanical	4L4T8-SP	2250	10%	1	112	NO RETRO	2250	10%	1	112	-	-	$ -
RESTROOM	Private RR	1L42CF	2250	10%	2	42	1L42CF-NR-OS	1575	8%	2	42	0.002	57	$ 3.60
RESTROOM	Private RR	NOTHING	2250	10%	1	0	WSIR	2250	10%	1	0	-	-	$ -
NUTRITION 103	Kitchen	3L4T8-SP	1000	90%	4	85	NO RETRO	1000	90%	4	85	-	-	$ -
CONCESSION 105	Storage	3L4T8-SP	1000	20%	2	85	NO RETRO	1000	20%	2	85	-	-	$ -
RRS	Private RR	1L42CF	1000	10%	3	42	NO RETRO	1000	10%	3	42	-	-	$ -
MENS RR	Halls High School	3L4T8-SP	4163	100%	3	85	NO RETRO	4163	100%	3	85	-	-	$ -
WOMENS RR	Halls High School	3L4T8-SP	4163	100%	6	85	NO RETRO	4163	100%	6	85	-	-	$ -
SOUTH GYM	Gym	8L42CF	2733	100%	45	372	8L42CF-NR-OS	1913	75%	45	372	4.185	13,725	$ 1,071.94
SOUTH GYM	Gym	NOTHING	2733	100%	4	0	WCIR	2733	100%	4	0	-	-	$ -
SOUTH GYM	EM/Night	LED EXIT	8766	100%	3	3	NO RETRO	8766	100%	3	3	-	-	$ -
GYM STORAGE 607	Storage	4L4T8-SP	2250	20%	1	112	4L4T8-SP-NR-OS	1575	15%	1	112	0.006	76	$ 4.95
GYM STORAGE 607	Storage	NOTHING	2250	20%	1	0	WSIR	2250	20%	1	0	-	-	$ -
GYM STOR/OFFICE 609	Offices, Private	4L4T8-SP	2250	50%	2	112	4L4T8-SP-NR-OS	1575	38%	2	112	0.028	151	$ 10.82
GYM STOR/OFFICE 609	Offices, Private	NOTHING	2250	50%	1	0	WSDT	2250	50%	1	0	-	-	$ -
LOCKER ENTRY	Gym	1L42CF	2733	100%	4	42	NO RETRO	2733	100%	4	42	-	-	$ -
WOMENS LOCKERS	Gym	3L4T8-SP	2733	100%	9	85	NO RETRO	2733	100%	9	85	-	-	$ -
WOMENS LOCKERS	EM/Night	3L4T8-SP-EM	8766	100%	1	82	NO RETRO	8766	100%	1	82	-	-	$ -
WOMENS LOCKERS	EM/Night	LED EXIT	8766	100%	2	3	NO RETRO	8766	100%	2	3	-	-	$ -
WOMENS LOCKERS	Gym	1L42CF	2733	100%	2	42	NO RETRO	2733	100%	2	42	-	-	$ -
CUST / STOR	Storage	2L23CF	2250	20%	1	46	NO RETRO	2250	20%	1	46	-	-	$ -
MENS LOCKERS	Gym	3L4T8-SP	2733	100%	9	85	NO RETRO	2733	100%	9	85	-	-	$ -
MENS LOCKERS	EM/Night	3L4T8-SP-EM	8766	100%	1	82	NO RETRO	8766	100%	1	82	-	-	$ -
MENS LOCKERS	EM/Night	LED EXIT	8766	100%	2	3	NO RETRO	8766	100%	2	3	-	-	$ -
MENS LOCKERS	Gym	1L42CF	2733	100%	2	42	NO RETRO	2733	100%	2	42	-	-	$ -
CUST / STOR	Storage	2L23CF	2250	20%	1	46	NO RETRO	2250	20%	1	46	-	-	$ -
WEIGHT ROOM 611	Class	3L4T8-SP-OS	1987	100%	17	82	NO RETRO	1987	100%	17	82	-	-	$ -
WEIGHT ROOM 611	EM/Night	LED EXIT	8766	100%	1	3	NO RETRO	8766	100%	1	3	-	-	$ -
MECH 611A	Mechanical	4L4T8-SP	2250	10%	2	112	NO RETRO	2250	10%	2	112	-	-	$ -
OLD GYM	Gym	1L400HID	2733	100%	29	458	N6L4T8-HP-LNS-WG-OS	1913	75%	29	222	8.454	23,983	$ 1,935.17
OLD GYM	Gym	NOTHING	2733	100%	4	0	WCIR	2733	100%	4	0	-	-	$ -
OLD GYM	EM/Night	LED EXIT	8766	100%	2	3	NO RETRO	8766	100%	2	3	-	-	$ -
GYM STORAGE 604A	Storage	3L4T12-EB-40W	2250	20%	4	105	2L4T8-SP-DLMP-OS	1575	15%	4	54	0.052	605	$ 40.01
GYM STORAGE 604A	Storage	NOTHING	2250	20%	1	0	WSIR	2250	20%	1	0	-	-	$ -
GYM STORAGE MEZZ	Storage	2L8T8-SP	2250	20%	3	110	NO RETRO	2250	20%	3	110	-	-	$ -
WRESTLING ROOM 614	Class	2L8T8-SP	1987	100%	24	110	2L8T8-SP-NR-OS	1391	75%	24	110	0.660	1,573	$ 132.69
WRESTLING ROOM 614	Class	NOTHING	1987	100%	2	0	WCIR	1987	100%	2	0	-	-	$ -
WRESTLING ROOM 614	EM/Night	LED EXIT	8766	100%	1	3	NO RETRO	8766	100%	1	3	-	-	$ -
GYM CORRIDOR	Halls High School	2L4T12-EB-40W	4163	100%	4	68	2L4T8-LP	4163	100%	4	48	0.080	333	$ 24.84
GYM CORRIDOR	EM/Night	2L4T12-EB-40W-EM	8766	100%	1	68	2L4T8-LP-EM	8766	100%	1	48	0.020	175	$ 11.87
GYM CORRIDOR	EM/Night	3L4T8-SP-EM	8766	100%	1	82	NO RETRO	8766	100%	1	82	-	-	$ -
GYM CORR VEST	Halls High School	2L13CF	4163	100%	1	26	NO RETRO	4163	100%	1	26	-	-	$ -
CLASS 618	Class	3L4T8-SP-DUAL	1987	100%	15	90	3L4T8-SP-DUAL-NR-OS	1391	75%	15	90	0.338	805	$ 67.86
CLASS 618	Class	NOTHING	1987	100%	1	0	WCDT	1987	100%	1	0	-	-	$ -
TRAINING ROOM 616	Class	1L175HID	1987	100%	3	210	N4L4T8-HP-8'IND-OS	1391	75%	3	151	0.290	622	$ 54.03
TRAINING ROOM 616	Class	1L400HID	1987	100%	2	458	N4L4T8-HP-8'IND-OS	1391	75%	2	151	0.690	1,400	$ 123.63

BUILDING:	Middle Park High School	
LIGHTING CONTRACTOR:	RetroTech Systems	
ELECTRIC CONSUMPTION RATE:	$0.0615	per kWh
ELECTRIC DEMAND RATE:	$4.5349	per kW
HEATING FUEL RATE:	$8.6421	per MMBtu

ECM 5.1: Lighting System Upgrades

		PRE-RETROFIT					POST-RETROFIT ("AS-BUILT")							
AREA	USAGE TYPE	EXISTING FIXTURE DESCRIPTION	ANNUAL HOURS	Demand Div Factor	QTY	WATTS EACH*	RETROFIT DESCRIPTION	ANNUAL HOURS	Demand Div Factor	QTY	WATTS EACH**	TOTAL KW SAVED	KWH SAVED PER YR	ANNUAL MONETARY SAVINGS
TRAINING ROOM 618	Class	NOTHING	1987	100%	1	0	WCDT	1987	100%	1	0	-	-	$ -
TREATMENT 616A	Class	3L4T8-SP	1987	100%	2	85	3L4T8-SP-NR-OS	1391	75%	2	85	0.043	101	$ 8.54
TREATMENT 616A	Class	NOTHING	1987	100%	1	0	WSIR	1987	100%	1	0	-	-	$ -
MENS LOCKER 612	Gym	2L4T12-EB-40W	2733	100%	10	68	2L4T8-LP-TG	2733	100%	10	48	0.200	547	$ 44.50
MENS SHOWER	Gym	1L100IN	2733	100%	3	100	1L15CF	2733	100%	3	15	0.255	697	$ 56.74
MENS COACH LKR 610	Offices, Private	2L4T12-EB-40W	2250	50%	1	68	2L4T8-LP-TG	2250	50%	1	48	0.010	45	$ 3.31
MENS COACH OFF 608	Offices, Private	2L4T12-EB-40W	2250	50%	4	68	2L4T8-SP-OS	1575	38%	4	54	0.055	272	$ 19.71
MENS COACH OFF 608	Offices, Private	NOTHING	2250	50%	1	0	WSIR	2250	50%	1	0	-	-	$ -
WOMENS COACH 606	Offices, Private	4L4T12-EB-40W	2250	50%	2	136	4L4T8-LP-OS	1575	38%	2	97	0.063	306	$ 22.29
WOMENS COACH 606	Offices, Private	NOTHING	2250	50%	1	0	WSIR	2250	50%	1	0	-	-	$ -
WOMENS LOCKER 604	Gym	2L4T12-EB-40W	2733	100%	10	68	2L4T8-LP-TG	2733	100%	10	48	0.200	547	$ 44.50
WOMENS SHOWER	Gym	1L100IN	2733	100%	3	100	1L15CF	2733	100%	3	15	0.255	697	$ 56.74
WOMENS COACH LKR	Offices, Private	2L4T12-EB-40W	2250	50%	1	68	2L4T8-LP-TG	2250	50%	1	48	0.010	45	$ 3.31
CUSTODIAL 502	Custodial	1L4T12-40W	2250	30%	1	43	1L4T8-SP	2250	30%	1	28	0.005	34	$ 2.32
LAUNDRY 504	Custodial	1L4T12-40W	2250	30%	1	43	1L4T8-SP	2250	30%	1	28	0.005	34	$ 2.32
CORR VEST	Halls High School	2L13CF	4163	100%	1	26	NO RETRO	4163	100%	1	26	-	-	$ -
ART CLASS 507	Class	2L8T8-SP	1987	100%	13	110	2L8T8-SP-NR-OS	1391	75%	13	110	0.358	852	$ 71.88
ART CLASS 507	Class	2L4T12-EB-40W	1987	100%	6	68	2L4T8-SP-OS	1391	75%	6	54	0.165	360	$ 31.12
ART CLASS 507	Class	NOTHING	1987	100%	1	0	WCDT	1987	100%	1	0	-	-	$ -
ART OFFICE	Offices, Private	2L4T12-EB-40W	2250	50%	2	68	2L4T8-SP-OS	1575	38%	2	54	0.028	136	$ 9.86
ART OFFICE	Offices, Private	NOTHING	2250	50%	1	0	WSIR	2250	50%	1	0	-	-	$ -
ART STORAGE A	Storage	1L8T8-SP	2250	20%	1	70	1L8T8-SP-NR-OS	1575	15%	1	70	0.004	47	$ 3.10
ART STORAGE A	Storage	NOTHING	2250	20%	1	0	WSIR	2250	20%	1	0	-	-	$ -
ART STORAGE B	Storage	1L8T8-SP	2250	20%	1	70	1L8T8-SP-NR-OS	1575	15%	1	70	0.004	47	$ 3.10
ART STORAGE B	Storage	NOTHING	2250	20%	1	0	WSIR	2250	20%	1	0	-	-	$ -
ART DARK ROOM	Class	2L4T12-EB-40W	1987	100%	6	68	2L4T8-LP	1987	100%	6	48	0.120	238	$ 21.20
ART RR	Private RR	2L100IN	2250	10%	1	200	N1L4T8-SP-4'WL	2250	10%	1	28	0.017	387	$ 24.74
WELDING CLASS 505	Class	2L8T8-SP	1987	100%	14	110	NO RETRO	1987	100%	14	110	-	-	$ -
WELDING CLASS 505	Class	2L4T12-EB-40W	1987	100%	3	68	2L4T8-LP	1987	100%	3	48	0.060	119	$ 10.60
WELDING CLASS 505	EM/Night	2L15EX	8766	100%	1	30	NLEDEX-G-B	8766	100%	1	3	0.027	237	$ 16.03
WELDING OFFICE	Offices, Private	2L4T12-EB-40W	2250	50%	1	68	2L4T8-SP-OS	1575	38%	1	54	0.014	68	$ 4.93
WELDING OFFICE	Offices, Private	NOTHING	2250	50%	1	0	WSIR	2250	50%	1	0	-	-	$ -
WELDING TOOL ROOM	Class	2L4T12-EB-40W	1987	100%	1	68	2L4T8-SP-OS	1391	75%	1	54	0.028	60	$ 5.19
WELDING PROJECT RM	Class	2L8T8-SP	1987	100%	1	110	2L8T8-SP-NR-OS	1391	75%	1	110	0.028	66	$ 5.53
DRAFTING 503	Class	2L4T12-EB-40W	1987	100%	13	68	2L4T8-SP-OS	1391	75%	13	54	0.358	780	$ 67.43
DRAFTING 503	Class	NOTHING	1987	100%	1	0	WCDT	1987	100%	1	0	-	-	$ -
WOOD CLASS 513	Class	2L8T8-SP	1987	100%	19	110	NO RETRO	1987	100%	19	110	-	-	$ -
WOOD CLASS 513	EM/Night	2L15EX	8766	100%	1	30	NLEDEX-G-B	8766	100%	1	3	0.027	237	$ 16.03
WOOD OFFICE	Offices, Private	2L4T12-EB-40W	2250	50%	1	68	2L4T8-SP-OS	1575	38%	1	54	0.014	68	$ 4.93
WOOD OFFICE	Offices, Private	NOTHING	2250	50%	1	0	WSIR	2250	50%	1	0	-	-	$ -
WOOD PROJECT RM	Class	2L8T8-SP	1987	100%	2	110	NO RETRO	1987	100%	2	110	-	-	$ -
WOOD STORAGE	Class	1L8T8-SP	1987	100%	1	70	NO RETRO	1987	100%	1	70	-	-	$ -
WOOD TOOL ROOM	Class	1L4T12-40W	1987	100%	2	43	1L4T8-LP	1987	100%	2	25	0.036	72	$ 6.36
WOOD FINISHING	Class	2L4T12-EB-40W	1987	100%	1	68	2L4T8-SP	1987	100%	1	54	0.014	28	$ 2.47
MENS RESTROOM	Halls High School	2L4T12-EB-40W	4163	100%	6	68	REMOVE	4163	100%	6	0	0.408	1,699	$ 126.67
MENS RESTROOM	Halls High School	NOTHING	4163	100%	3	0	N2L4T8-SP-8'WR	4163	100%	3	54	(0.162)	(674)	$ (50.30)
WOMENS RESTROOM	Halls High School	2L4T12-EB-40W	4163	100%	6	68	REMOVE	4163	100%	6	0	0.408	1,699	$ 126.67
WOMENS RESTROOM	Halls High School	NOTHING	4163	100%	3	0	N2L4T8-SP-8'WR	4163	100%	3	54	(0.162)	(674)	$ (50.30)
KITCHEN	Kitchen	2L4T12-EB-40W	1000	100%	24	68	2L4T8-SP	1000	100%	24	54	0.336	336	$ 38.95
KITCHEN	EM/Night	LED EXIT	8766	100%	1	3	NO RETRO	8766	100%	1	3	-	-	$ -
KITCHEN	Kitchen	2L4T12-EB-40W	1000	100%	1	68	2L4T8-LP	1000	100%	1	48	0.020	20	$ 2.32
KITCHEN WHSE	Kitchen	1L8T8-SP	1000	100%	4	70	NO RETRO	1000	100%	4	70	-	-	$ -
KITCHEN WHSE	EM/Night	LED EXIT	8766	100%	1	3	NO RETRO	8766	100%	1	3	-	-	$ -
KITCHEN LAUNDRY	Kitchen	2L4T12-EB-40W	1000	100%	1	68	2L4T8-LP	1000	100%	1	48	0.020	20	$ 2.32
KITCHEN RR	Private RR	2L100IN	2250	10%	1	200	N2L2T8-SP-2'WL	2250	10%	1	32	0.017	378	$ 24.16
KITCHEN OFFICE	Offices, Private	2L4T12-EB-40W	2250	50%	1	68	2L4T8-SP-OS	1575	38%	1	54	0.014	68	$ 4.93
KITCHEN OFFICE	Offices, Private	NOTHING	2250	50%	1	0	WSIR	2250	50%	1	0	-	-	$ -
CUST / MAINT OFF 302	Offices, Private	2L4T12-EB-40W	2250	50%	2	68	2L4T8-SP	1440	50%	2	54	0.014	150	$ 10.02
CUST / MAINT OFF 302	Offices, Private	1L8T8-SP	2250	50%	3	70	NO RETRO	2250	50%	3	70	-	-	$ -

BUILDING: Middle Park High School
LIGHTING CONTRACTOR: RetroTech Systems
ELECTRIC CONSUMPTION RATE: $0.0615 per kWh
ELECTRIC DEMAND RATE: $4.5349 per kW
HEATING FUEL RATE: $8.6421 per MMBtu

ECM 5.1: Lighting System Upgrades

		PRE-RETROFIT					POST-RETROFIT ("AS-BUILT")							
AREA	USAGE TYPE	EXISTING FIXTURE DESCRIPTION	ANNUAL HOURS	Demand Div Factor	QTY	WATTS EACH*	RETROFIT DESCRIPTION	ANNUAL HOURS	Demand Div Factor	QTY	WATTS EACH**	TOTAL KW SAVED	KWH SAVED PER YR	ANNUAL MONETARY SAVINGS
MECH / SHOP 304	Offices, Private	1L8T8-SP	2250	50%	7	70	NO RETRO	2250	50%	7	70	-	-	$ -
MECH / SHOP 304	Offices, Private	LED EXIT	2250	50%	1	3	NO RETRO	2250	50%	1	3	-	-	$ -
CLASS 306 ENTRY	Class	2L4T12-EB-40W	1987	100%	4	68	2L4T8-SP	1987	100%	4	54	0.056	111	$ 9.89
CLASS 306 ENTRY	Class	NOTHING	1987	100%	1	0	CIR	1987	100%	1	0	-	-	$ -
CLASS 306	Class	2L4T12-EB-40W	1987	100%	12	68	2L4T8-SP-OS	1391	75%	12	54	0.330	720	$ 62.24
CLASS 306	Class	NOTHING	1987	100%	1	0	WCDT	1987	100%	1	0	-	-	$ -
COOKING	Class	2L4T12-EB-40W	1987	100%	12	68	2L4T8-SP-OS	1391	75%	12	54	0.330	720	$ 62.24
COOKING	Class	NOTHING	1987	100%	3	0	WCDT	1987	100%	3	0	-	-	$ -
LAUNDRY	Custodial	2L4T12-EB-40W	2250	30%	1	68	2L4T8-SP-OS	1575	23%	1	54	0.008	68	$ 4.63
LAUNDRY	Custodial	NOTHING	2250	30%	1	0	WSIR	2250	30%	1	0	-	-	$ -
STAFF LOUNGE	Offices, Private	3L4T8-SP-DUAL	2250	50%	10	90	3L4T8-SP-DUAL-NR-OS	1575	38%	10	90	0.113	608	$ 43.49
STAFF LOUNGE	Offices, Private	NOTHING	2250	50%	1	0	WCDT	2250	50%	1	0	-	-	$ -
MEDIA CENTER 212	Library	2L4T12-EB-40W	2000	90%	20	68	2L4T8-SP-HIGH	2000	90%	20	54	0.252	560	$ 48.16
MEDIA CENTER 212	Library	2L4T12-EB-40W	2000	90%	18	68	2L4T8-SP	2000	90%	18	54	0.227	504	$ 43.34
MEDIA CLASS AREA	Class	3L4T8-SP	1987	100%	9	85	3L4T8-SP-NR-OS	1391	75%	9	85	0.191	456	$ 38.45
MEDIA CLASS AREA	Class	NOTHING	1987	100%	1	0	WCDT	1987	100%	1	0	-	-	$ -
MEDIA OFFICE	Offices, Private	2L4T12-EB-40W	2250	50%	2	68	2L4T8-SP-OS	1575	38%	2	54	0.028	136	$ 9.86
MEDIA OFFICE	Offices, Private	NOTHING	2250	50%	1	0	WSIR	2250	50%	1	0	-	-	$ -
MEDIA WORK ROOM	Offices, Private	2L4T12-EB-40W	2250	50%	1	68	2L4T8-SP-OS	1575	38%	1	54	0.014	68	$ 4.93
MEDIA WORK ROOM	Offices, Private	NOTHING	2250	50%	1	0	WSIR	2250	50%	1	0	-	-	$ -
MEDIA CORRIDOR	Halls High School	2L4T12-EB-40W	4163	100%	6	68	2L4T8-LP	4163	100%	6	48	0.120	500	$ 37.26
OFFICE 214	Offices, Private	2L4T12-EB-40W	2250	50%	2	68	2L4T8-SP-OS	1575	38%	2	54	0.028	136	$ 9.86
OFFICE 214	Offices, Private	NOTHING	2250	50%	1	0	WSIR	2250	50%	1	0	-	-	$ -
KITCHEN / BREAK	Offices, Private	2L4T12-EB-40W	2250	50%	1	68	2L4T8-SP-OS	1575	38%	1	54	0.014	68	$ 4.93
KITCHEN / BREAK	Offices, Private	NOTHING	2250	50%	1	0	WSIR	2250	50%	1	0	-	-	$ -
STUDIO CLASS 309	Class	2L4T12-EB-40W	1987	100%	6	68	2L4T8-SP-OS	1391	75%	6	54	0.165	360	$ 31.12
STUDIO CLASS 309	Class	NOTHING	1987	100%	1	0	WCDT	1987	100%	1	0	-	-	$ -
MENS RESTROOM	Halls High School	2L4T12-EB-40W	4163	100%	3	68	REMOVE	4163	100%	3	0	0.204	849	$ 63.34
MENS RESTROOM	Halls High School	NOTHING	4163	100%	3	0	N1L4T8-SP-4'WR	4163	100%	3	28	(0.084)	(350)	$ (26.08)
WOMENS RESTROOM	Halls High School	2L4T12-EB-40W	4163	100%	3	68	REMOVE	4163	100%	3	0	0.204	849	$ 63.34
WOMENS RESTROOM	Halls High School	NOTHING	4163	100%	3	0	N1L4T8-SP-4'WR	4163	100%	3	28	(0.084)	(350)	$ (26.08)
COMPUTER LAB 303	Class	2L4T12-EB-40W	1987	100%	11	68	2L4T8-SP-OS	1391	75%	11	54	0.303	660	$ 57.06
COMPUTER LAB 303	Class	NOTHING	1987	100%	1	0	WCDT	1987	100%	1	0	-	-	$ -
OFFICE / SERVER 303A	Offices, Private	2L4T12-EB-40W	2250	50%	1	68	2L4T8-SP-OS	1575	38%	1	54	0.014	68	$ 4.93
OFFICE / SERVER 303A	Offices, Private	NOTHING	2250	50%	1	0	WSIR	2250	50%	1	0	-	-	$ -
CLASS 301	Class	3L4T8-SP-DUAL	1987	100%	12	90	3L4T8-SP-DUAL-NR-OS	1391	75%	12	90	0.270	644	$ 54.28
CLASS 301	Class	NOTHING	1987	100%	1	0	WCDT	1987	100%	1	0	-	-	$ -
CAREER CENTER 104	Common Admin	3L4T8-SP-DUAL	2250	100%	8	90	NO RETRO	2250	100%	8	90	-	-	$ -
CAREER OFFICE 104A	Offices, Private	2L4T12-EB-40W	2250	50%	2	68	2L4T8-SP-OS	1575	38%	2	54	0.028	136	$ 9.86
CAREER OFFICE 104A	Offices, Private	NOTHING	2250	50%	1	0	WSDT	2250	50%	1	0	-	-	$ -
CAREER COPY RM 104B	Offices, Private	2L4T12-EB-40W	2250	50%	1	68	2L4T8-SP-OS	1575	38%	1	54	0.014	68	$ 4.93
CAREER COPY RM 104B	Offices, Private	NOTHING	2250	50%	1	0	WSIR	2250	50%	1	0	-	-	$ -
CAREER CLASSROOM 104C	Offices, Private	2L4T12-EB-40W	2250	50%	6	68	2L4T8-LP-OS	1575	38%	6	48	0.096	464	$ 33.79
CAREER CLASSROOM 104C	Offices, Private	NOTHING	2250	50%	1	0	WCDT	2250	50%	1	0	-	-	$ -
CAREER BREAK RM 104E	Offices, Private	2L4T12-EB-40W	2250	50%	2	68	2L4T8-SP-OS	1575	38%	2	54	0.028	136	$ 9.86
CAREER BREAK RM 104E	Offices, Private	NOTHING	2250	50%	1	0	WSIR	2250	50%	1	0	-	-	$ -
CAREER AREA RRS	Private RR	2L100IN	2250	10%	2	200	N2L2T8-SP-2'WL	1575	10%	2	32	0.034	799	$ 50.99
FILE ROOM	Offices, Private	2L4T12-EB-40W	2250	50%	2	68	2L4T8-SP-OS	1575	38%	2	54	0.028	136	$ 9.86
FILE ROOM	Offices, Private	NOTHING	2250	50%	1	0	WSIR	2250	50%	1	0	-	-	$ -
CAREER OFFICE 104F	Offices, Private	3L4T8-SP-DUAL	2250	50%	3	90	3L4T8-SP-DUAL-NR-OS	1575	38%	3	90	0.034	182	$ 13.05
CAREER OFFICE 104F	Offices, Private	NOTHING	2250	50%	1	0	WSDT	2250	50%	1	0	-	-	$ -
CLINIC 102	Common Admin	3L4T8-SP-DUAL	2250	100%	6	90	NO RETRO	2250	100%	6	90	-	-	$ -
CLINIC RR	Private RR	2L100IN	2250	10%	1	200	N2L2T8-SP-2'WL	1575	10%	1	32	0.017	400	$ 25.49
SPECIAL ED CLASS 202	Class	3L4T8-SP-DUAL-OS	1987	100%	8	82	NO RETRO	1987	100%	8	82	-	-	$ -
SPED FILE ROOM	Storage	3L4T8-SP	2250	20%	1	85	NO RETRO	2250	20%	1	85	-	-	$ -
SPED RR	Private RR	3L4T8-SP	2250	10%	1	85	NO RETRO	2250	10%	1	85	-	-	$ -
SPED OFFICE	Private RR	3L4T8-SP	2250	10%	2	85	NO RETRO	2250	10%	2	85	-	-	$ -
COMPUTER LAB 204	Class	2L4T12-EB-40W	1987	100%	11	68	2L4T8-SP-OS	1391	75%	11	54	0.303	660	$ 57.06
COMPUTER LAB 204	Class	NOTHING	1987	100%	1	0	WCDT	1987	100%	1	0	-	-	$ -

BUILDING:	Middle Park High School	
LIGHTING CONTRACTOR:	RetroTech Systems	
ELECTRIC CONSUMPTION RATE:	$0.0615	per kWh
ELECTRIC DEMAND RATE:	$4.5349	per kW
HEATING FUEL RATE:	$8.6421	per MMBtu

ECM 5.1: Lighting System Upgrades

		PRE-RETROFIT					POST-RETROFIT ("AS-BUILT")							
AREA	USAGE TYPE	EXISTING FIXTURE DESCRIPTION	ANNUAL HOURS	Demand Div Factor	QTY	WATTS EACH*	RETROFIT DESCRIPTION	ANNUAL HOURS	Demand Div Factor	QTY	WATTS EACH**	TOTAL KW SAVED	KWH SAVED PER YR	ANNUAL MONETARY SAVINGS
TECH OFFICE	Offices, Private	2L4T12-EB-40W	2250	50%	2	68	2L4T8-SP-OS	1575	38%	2	54	0.028	136	$ 9.86
TECH OFFICE	Offices, Private	NOTHING	2250	50%	1	0	WSIR	2250	50%	1	0	-	-	$ -
MENS RESTROOM	Halls High School	2L4T12-EB-40W	4163	100%	3	68	REMOVE	4163	100%	3	0	0.204	849	$ 63.34
MENS RESTROOM	Halls High School	NOTHING	4163	100%	3	0	N1L4T8-SP-4'WR	4163	100%	3	28	(0.084)	(350)	$ (26.08)
WOMENS RESTROOM	Halls High School	2L4T12-EB-40W	4163	100%	3	68	REMOVE	4163	100%	3	0	0.204	849	$ 63.34
WOMENS RESTROOM	Halls High School	NOTHING	4163	100%	3	0	N1L4T8-SP-4'WR	4163	100%	3	28	(0.084)	(350)	$ (26.08)
COMPUTER STOR 215	Storage	2L4T12-EB-40W	2250	20%	2	68	2L4T8-SP-OS	1575	15%	2	54	0.011	136	$ 8.96
COMPUTER STOR 215	Storage	NOTHING	2250	20%	1	0	WSIR	2250	20%	1	0	-	-	$ -
CUSTODIAL 217	Custodial	2L4T12-40W	2250	30%	1	86	2L4T8-SP-OS	1575	23%	1	54	0.014	108	$ 7.41
CUSTODIAL 217	Custodial	NOTHING	2250	30%	1	0	WSIR	2250	30%	1	0	-	-	$ -
STORAGE 217	Storage	2L4T12-EB-40W	2250	20%	1	68	2L4T8-SP-OS	1575	15%	1	54	0.006	68	$ 4.48
STORAGE 217	Storage	NOTHING	2250	20%	1	0	WSIR	2250	20%	1	0	-	-	$ -
CLASS 219	Class	2L4T12-EB-40W	1987	100%	9	68	2L4T8-SP-OS	1391	75%	9	54	0.248	540	$ 46.68
CLASS 219	Class	NOTHING	1987	100%	1	0	WCDT	1987	100%	1	0	-	-	$ -
CLASS 219	EM/Night	2L15EX	8766	100%	1	30	NLEDEX-G-B	8766	100%	1	3	0.027	237	$ 16.03
STORAGE 1	Storage	2L4T12-EB-40W	2250	20%	1	68	2L4T8-SP-OS	1575	15%	1	54	0.006	68	$ 4.48
STORAGE 1	Storage	NOTHING	2250	20%	1	0	WSIR	2250	20%	1	0	-	-	$ -
STORAGE 2	Storage	2L4T8-SP	2250	20%	2	58	2L4T8-SP-NR-OS	1575	15%	2	58	0.006	78	$ 5.13
STORAGE 2	Storage	NOTHING	2250	20%	1	0	WSIR	2250	20%	1	0	-	-	$ -
CLASS 211	Class	2L4T12-EB-40W	1987	100%	12	68	2L4T8-SP-OS	1391	75%	12	54	0.330	720	$ 62.24
CLASS 211	Class	NOTHING	1987	100%	1	0	WCDT	1987	100%	1	0	-	-	$ -
CLASS 213	Class	2L4T12-EB-40W	1987	100%	9	68	2L4T8-SP-OS	1391	75%	9	54	0.248	540	$ 46.68
CLASS 213	Class	NOTHING	1987	100%	1	0	WCDT	1987	100%	1	0	-	-	$ -
CLASS 209	Class	2L4T12-EB-40W	1987	100%	9	68	2L4T8-SP-OS	1391	75%	9	54	0.248	540	$ 46.68
CLASS 209	Class	NOTHING	1987	100%	1	0	WCDT	1987	100%	1	0	-	-	$ -
CLASS 207	Class	2L4T12-EB-40W	1987	100%	9	68	2L4T8-SP-OS	1391	75%	9	54	0.248	540	$ 46.68
CLASS 207	Class	NOTHING	1987	100%	1	0	WCDT	1987	100%	1	0	-	-	$ -
CLASS 203	Class	2L4T12-EB-40W	1987	100%	9	68	2L4T8-SP-OS	1391	75%	9	54	0.248	540	$ 46.68
CLASS 203	Class	NOTHING	1987	100%	1	0	WCDT	1987	100%	1	0	-	-	$ -
CLASS 205	Class	2L4T12-EB-40W	1987	100%	9	68	2L4T8-SP-OS	1391	75%	9	54	0.248	540	$ 46.68
CLASS 205	Class	NOTHING	1987	100%	1	0	WCDT	1987	100%	1	0	-	-	$ -
MUSIC 201	Class	2L4T12-EB-40W	1987	100%	27	68	2L4T8-SP-OS-HIGH	1391	75%	27	54	0.743	1,620	$ 140.05
MUSIC 201	Class	NOTHING	1987	100%	1	0	WCDT	1987	100%	1	0	-	-	$ -
MUSIC ENTRY	Class	2L4T12-40W	1987	100%	1	86	2L4T8-LP	1987	100%	1	48	0.038	76	$ 6.71
MUSIC OFFICE	Offices, Private	2L4T12-EB-40W	2250	50%	2	68	2L4T8-SP-OS	1575	38%	2	54	0.028	136	$ 9.86
MUSIC OFFICE	Offices, Private	NOTHING	2250	50%	1	0	WSIR	2250	50%	1	0	-	-	$ -
MUSIC WORK ROOM	Offices, Private	2L8T8-SP	2250	50%	2	110	2L8T8-SP-NR-OS	1575	38%	2	110	0.028	149	$ 10.63
MUSIC WORK ROOM	Offices, Private	NOTHING	2250	50%	1	0	WSIR	2250	50%	1	0	-	-	$ -
MUSIC VESTIBULE	Class	2LU6T8-SP	1987	100%	1	58	N2L2T8-SP-2X2TR	1987	100%	1	32	0.026	52	$ 4.59
UNIFORM STORAGE	Storage	2L4T12-EB-40W	2250	20%	1	68	2L4T8-SP-OS	1575	15%	1	54	0.006	68	$ 4.48
UNIFORM STORAGE	Storage	NOTHING	2250	20%	1	0	WSIR	2250	20%	1	0	-	-	$ -
BAND STORAGE	Storage	2L4T12-EB-40W	2250	20%	1	68	2L4T8-SP-OS	1575	15%	1	54	0.006	68	$ 4.48
BAND STORAGE	Storage	NOTHING	2250	20%	1	0	WSIR	2250	20%	1	0	-	-	$ -
ENSAMBLE	Offices, Private	2L4T12-EB-40W	2250	50%	6	68	2L4T8-SP-OS-HIGH	1575	38%	6	54	0.083	408	$ 29.57
ENSAMBLE	Offices, Private	NOTHING	2250	50%	1	0	WCIR	2250	50%	1	0	-	-	$ -
ENSAMBLE VESTIBULE	Offices, Private	2L4T12-EB-40W	2250	50%	1	68	2L4T8-LP	2250	50%	1	48	0.010	45	$ 3.31
AUDITORIUM	Auditorium	2L4T12-EB-40W	2097	40%	13	68	2L4T8-SP	2097	40%	13	54	0.073	382	$ 27.44
AUDITORIUM	EM/Night	LED EXIT	8766	100%	4	3	NO RETRO	8766	100%	4	3	-	-	$ -
SOUND BOOTH	Storage	2L4T12-EB-40W	2250	20%	1	68	2L4T8-SP	2250	20%	1	54	0.003	32	$ 2.09
STAGE	Storage	2L8T8-SP	2250	20%	21	110	NO RETRO	2250	20%	21	110	-	-	$ -
STAGE STORAGE	Storage	2L8T8-SP	2250	20%	1	110	NO RETRO	2250	20%	1	110	-	-	$ -
WATER RISER	Storage	2L4T12-EB-40W	2250	20%	1	68	2L4T8-SP	2250	20%	1	54	0.003	32	$ 2.09
STAGE RR	Private RR	2L100IN	2250	10%	1	200	N2L2T8-SP-WL	2250	10%	1	32	0.017	378	$ 24.16
STORAGE 402	Storage	3L4T8-SP	2250	20%	4	85	3L4T8-SP-NR-OS	1575	15%	4	85	0.017	230	$ 15.04
STORAGE 402	Storage	NOTHING	2250	20%	1	0	WSIR	2250	20%	1	0	-	-	$ -
SCIENCE 404	Class	2L4T12-EB-40W	1987	100%	15	68	2L4T8-SP-OS	1391	75%	15	54	0.413	900	$ 77.81
SCIENCE 404	Class	NOTHING	1987	100%	1	0	WCDT	1987	100%	1	0	-	-	$ -
WORK ROOM 406	Offices, Private	3L4T8-SP-DUAL	1440	50%	8	90	3L4T8-SP-DUAL-NR-OS	1008	38%	8	90	0.090	311	$ 24.03
WORK ROOM 406	Offices, Private	NOTHING	1440	50%	1	0	WCDT	1440	50%	1	0	-	-	$ -

BUILDING:	Middle Park High School	
LIGHTING CONTRACTOR:	RetroTech Systems	
ELECTRIC CONSUMPTION RATE:	$0.0615	per kWh
ELECTRIC DEMAND RATE:	$4.5349	per kW
HEATING FUEL RATE:	$8.6421	per MMBtu

ECM 5.1: Lighting System Upgrades

		PRE-RETROFIT					POST-RETROFIT ("AS-BUILT")							
AREA	USAGE TYPE	EXISTING FIXTURE DESCRIPTION	ANNUAL HOURS	Demand Div Factor	QTY	WATTS EACH*	RETROFIT DESCRIPTION	ANNUAL HOURS	Demand Div Factor	QTY	WATTS EACH**	TOTAL KW SAVED	KWH SAVED PER YR	ANNUAL MONETARY SAVINGS
SCIENCE 408	Class	3L4T8-SP-DUAL-OS	1987	100%	1	82	NO RETRO	1987	100%	1	82	-	-	$ -
SCIENCE 408	Class	3L2T8-SP-OS	1987	100%	1	45	NO RETRO	1987	100%	1	45	-	-	$ -
SCIENCE 401	Class	3L4T8-SP-DUAL	1987	100%	20	90	3L4T8-SP-DUAL-NR-OS	1391	75%	20	90	0.450	1,073	$ 90.47
SCIENCE 401	Class	NOTHING	1987	100%	2	0	WCDT	1987	100%	2	0	-	-	$ -
SCIENCE 401	EM/Night	LED EXIT	8766	100%	2	3	NO RETRO	8766	100%	2	3	-	-	$ -
WORK / STOR 401A	Offices, Private	3L4T8-SP	2250	50%	4	85	3L4T8-SP-NR-OS	1575	38%	4	85	0.043	230	$ 16.43
WORK / STOR 401A	Offices, Private	NOTHING	2250	50%	1	0	WSIR	2250	50%	1	0	-	-	$ -
CUST / STOR 403	Custodial	4L4T8-SP	2250	30%	1	112	4L4T8-SP-NR-OS	2250	23%	1	112	0.008	-	$ 0.46
CUST / STOR 403	Custodial	NOTHING	2250	30%	1	0	WSIR	2250	30%	1	0	-	-	$ -
ELECTRIC ROOM 403A	Mechanical	2L4T8-SP	2250	10%	1	58	NO RETRO	2250	10%	1	58	-	-	$ -
CLASS 405	Class	3L4T8-SP-DUAL-OS	1987	100%	12	82	NO RETRO	1987	100%	12	82	-	-	$ -
CLASS 407	Class	3L4T8-SP-DUAL-OS	1987	100%	12	82	NO RETRO	1987	100%	12	82	-	-	$ -
CLASS 409	Class	3L4T8-SP-DUAL-OS	1987	100%	12	82	NO RETRO	1987	100%	12	82	-	-	$ -
CLASS 412	Class	3L4T8-SP-DUAL-OS	1987	100%	12	82	NO RETRO	1987	100%	12	82	-	-	$ -
CLASS 410	Class	3L4T8-SP-DUAL-OS	1987	100%	12	82	NO RETRO	1987	100%	12	82	-	-	$ -
FIRE RISER ROOM	Mechanical	4L4T8-SP	2250	10%	1	112	NO RETRO	2250	10%	1	112	-	-	$ -
CLASS 310	Class	4L4T8-SP	1987	100%	18	112	4L4T8-SP-NR-OS	1391	75%	18	112	0.504	1,202	$ 101.33
CLASS 310	Class	NOTHING	1987	100%	1	0	WCDT	1987	100%	1	0	-	-	$ -
CLASS 310	EM/Night	LED EXIT	8766	100%	2	3	NO RETRO	8766	100%	2	3	-	-	$ -
WORK / STOR	Offices, Private	3L4T8-SP	2250	50%	2	85	3L4T8-SP-NR-OS	1575	38%	2	85	0.021	115	$ 8.21
WORK / STOR	Offices, Private	NOTHING	2250	50%	1	0	WSIR	2250	50%	1	0	-	-	$ -
CLASS 312	Class	4L4T8-SP	1987	100%	9	112	4L4T8-SP-NR-OS	1391	75%	9	112	0.252	601	$ 50.67
CLASS 312	Class	NOTHING	1987	100%	1	0	WCDT	1987	100%	1	0	-	-	$ -
CLASS 314	Class	4L4T8-SP	1987	100%	9	112	4L4T8-SP-NR-OS	1391	75%	9	112	0.252	601	$ 50.67
CLASS 314	Class	NOTHING	1987	100%	1	0	WCDT	1987	100%	1	0	-	-	$ -
CLASS 311	Class	4L4T8-SP	1987	100%	9	112	4L4T8-SP-NR-OS	1391	75%	9	112	0.252	601	$ 50.67
CLASS 311	Class	2L4T8-SP	1987	100%	3	58	2L4T8-SP-NR-OS	1391	75%	3	58	0.044	104	$ 8.75
CLASS 311	Class	NOTHING	1987	100%	1	0	WCDT	1987	100%	1	0	-	-	$ -
CLASS 313	Class	4L4T8-SP	1987	100%	9	112	4L4T8-SP-NR-OS	1391	75%	9	112	0.252	601	$ 50.67
CLASS 313	Class	2L4T8-SP	1987	100%	3	58	2L4T8-SP-NR-OS	1391	75%	3	58	0.044	104	$ 8.75
CLASS 313	Class	NOTHING	1987	100%	1	0	WCDT	1987	100%	1	0	-	-	$ -
COMPUTER LAB 316	Class	3L4T8-SP	1987	100%	14	85	3L4T8-SP-NR-OS	1391	75%	14	85	0.298	709	$ 59.81
COMPUTER LAB 316	Class	NOTHING	1987	100%	1	0	WCDT	1987	100%	1	0	-	-	$ -
COMPUTER LAB 319	Class	3L4T8-SP	1987	100%	14	85	3L4T8-SP-NR-OS	1391	75%	14	85	0.298	709	$ 59.81
COMPUTER LAB 319	Class	NOTHING	1987	100%	1	0	WCDT	1987	100%	1	0	-	-	$ -
OFFICE / SERVER	Offices, Private	3L4T8-SP	2250	50%	1	85	3L4T8-SP-NR-OS	1575	38%	1	85	0.011	57	$ 4.11
OFFICE / SERVER	Offices, Private	NOTHING	2250	50%	1	0	WSIR	2250	50%	1	0	-	-	$ -
ELECTRIC ROOM	Mechanical	3L4T8-SP	2250	10%	1	85	NO RETRO	2250	10%	1	85	-	-	$ -
CUSTODIAL	Custodial	3L4T8-SP	2250	30%	1	85	3L4T8-SP-NR-OS	1575	23%	1	85	0.006	57	$ 3.88
CUSTODIAL	Custodial	NOTHING	2250	30%	1	0	WSIR	2250	30%	1	0	-	-	$ -
HALL 300	Halls High School	2LF40-BIAX	4163	100%	10	71	2LF40-BIAX-NR-PC	2082	50%	10	71	0.355	1,478	$ 110.20
HALL 300	Halls High School	NOTHING	4163	100%	1	0	PHOTOCELL	4163	100%	1	0	-	-	$ -
HALL 300	Halls High School	2L13CF	4163	100%	4	26	NO RETRO	4163	100%	4	26	-	-	$ -
HALL 300	Halls High School	1L18CF	4163	100%	2	18	NO RETRO	4163	100%	2	18	-	-	$ -
HALL 300	Halls High School	2LT5HO	4163	100%	2	117	NO RETRO	4163	100%	2	117	-	-	$ -
HALL 300	EM/Night	LED EXIT	8766	100%	4	3	NO RETRO	8766	100%	4	3	-	-	$ -
HALL 300	Halls High School	2L4T12-EB-40W	4163	100%	20	68	2L4T8-SP	4163	100%	20	54	0.280	1,166	$ 86.93
HALL 400	Halls High School	2L4T8-SP	4163	100%	14	58	NO RETRO	4163	100%	14	58	-	-	$ -
HALL 400	Halls High School	2LF40-BIAX	4163	100%	5	71	2LF40-BIAX-NR-PC	2082	50%	5	71	0.178	739	$ 55.10
HALL 400	Halls High School	NOTHING	4163	100%	1	0	PHOTOCELL	4163	100%	1	0	-	-	$ -
HALL 400	Halls High School	1L42CF	4163	100%	2	42	NO RETRO	4163	100%	2	42	-	-	$ -
HALL 400	EM/Night	LED EXIT	8766	100%	5	3	NO RETRO	8766	100%	5	3	-	-	$ -
HALL 200	Halls High School	1L100IN	4163	100%	2	100	N2L13CF-CPY	4163	100%	2	26	0.148	616	$ 45.95
HALL 200	Halls High School	2L4T12-EB-40W	4163	100%	21	68	2L4T8-SP	4163	100%	21	54	0.294	1,224	$ 91.28
HALL 200	EM/Night	LED EXIT	8766	100%	5	3	NO RETRO	8766	100%	5	3	-	-	$ -
HALL 500	Halls High School	1L100IN	4163	100%	1	100	N2L13CF-CPY	4163	100%	1	26	0.074	308	$ 22.98
HALL 500	Halls High School	2L4T12-EB-40W	4163	100%	10	68	2L4T8-SP	4163	100%	10	54	0.140	583	$ 43.47
HALL 500	EM/Night	LED EXIT	8766	100%	2	3	NO RETRO	8766	100%	2	3	-	-	$ -
HALL 100	Halls High School	3L4T8-SP	4163	100%	8	85	2L4T8-SP-24RFL	4163	100%	8	54	0.248	1,032	$ 77.00

BUILDING:	Middle Park High School	
LIGHTING CONTRACTOR:	RetroTech Systems	
ELECTRIC CONSUMPTION RATE:	$0.0615	per kWh
ELECTRIC DEMAND RATE:	$4.5349	per kW
HEATING FUEL RATE:	$8.6421	per MMBtu

ECM 5.1: Lighting System Upgrades

		PRE-RETROFIT					POST-RETROFIT ("AS-BUILT")							
AREA	USAGE TYPE	EXISTING FIXTURE DESCRIPTION	ANNUAL HOURS	Demand Div Factor	QTY	WATTS EACH*	RETROFIT DESCRIPTION	ANNUAL HOURS	Demand Div Factor	QTY	WATTS EACH**	TOTAL KW SAVED	KWH SAVED PER YR	ANNUAL MONETARY SAVINGS
HALL 100	EM/Night	LED EXIT	8766	100%	1	3	NO RETRO	8766	100%	1	3	-	-	$ -
COMMON / CAFETERIA	Halls High School	2L4T12-EB-40W	4163	100%	25	68	2L4T8-LP	4163	100%	25	48	0.500	2,082	$ 155.24
COMMON / CAFETERIA	EM/Night	LED EXIT	8766	100%	2	3	NO RETRO	8766	100%	2	3	-	-	$ -
COMMON / CAFETERIA	Halls High School	3L4T8-SP	4163	100%	1	85	NO RETRO	4163	100%	1	85	-	-	$ -
COMMON / CAFETERIA	Halls High School	1L100HID	4163	100%	8	129	NO RETRO	4163	100%	8	129	-	-	$ -
COMMON / CAFETERIA	Halls High School	3L4T8-SP	4163	100%	21	85	NO RETRO	4163	100%	21	85	-	-	$ -
COMMON / CAFETERIA	Halls High School	3L4T8-SP	4163	100%	4	85	3L4T8-SP-PCDIM	2082	50%	4	96	0.148	616	$ 45.94
COMMON / CAFETERIA	Halls High School	2L8T8-SP	4163	100%	14	110	2L4T8-SP-8'CONV-ASYMRFL	4163	100%	14	54	0.784	3,264	$ 243.41
COMMON / CAFETERIA	Halls High School	2L4T8-SP	4163	100%	2	58	1L4T8-SP-4'CONV-ASYMRFL	4163	100%	2	28	0.060	250	$ 18.63
COMMON / CAFETERIA	Halls High School	1L42CF	4163	100%	7	42	NO RETRO	4163	100%	7	42	-	-	$ -
COMMONS DISPLAY CASE	Halls High School	1L4T12-40W	4163	100%	3	43	1L4T8-LP	4163	100%	3	25	0.054	225	$ 16.77
COMMONS DISPLAY CASE	Halls High School	1L4T8-SP	4163	100%	1	32	NO RETRO	4163	100%	1	32	-	-	$ -
COMMONS DISPLAY CASE	Halls High School	1L4T12-40W	4163	100%	6	43	1L4T8-LP	4163	100%	6	25	0.108	450	$ 33.53
AUTO SHOP	Storage	3L4T8-SP	2250	20%	12	85	NO RETRO	2250	20%	12	85	-	-	$ -
MODULAR CLASSROOM	Storage	4L4T12-40W	2250	20%	12	172	2L4T8-SP-DLMP	2250	20%	12	54	0.283	3,186	$ 211.37
MODULAR CLASSROOM	EM/Night	2L15EX	8766	100%	2	30	NLEDEX-G-B	8766	100%	2	3	0.054	473	$ 32.05
TOTALS					1345					1345		31.773	99,948	$ 7,876.59

* Based on ANSI wattages - to be verified by contractor
** Based on manufacturer's wattages - to be verified by contractor

BUILDING: East Grand Middle School
LIGHTING CONTRACTOR: RetroTech Systems
ELECTRIC CONSUMPTION RATE: $0.0615 per kWh
ELECTRIC DEMAND RATE: $4.5349 per kW
HEATING FUEL RATE: $8.6421 per MMBtu

ECM 5.1: Lighting System Upgrades

		PRE-RETROFIT					POST-RETROFIT ("AS-BUILT")							
AREA	USAGE TYPE	EXISTING FIXTURE DESCRIPTION	ANNUAL HOURS	Demand Div Factor	QTY	WATTS EACH*	RETROFIT DESCRIPTION	ANNUAL HOURS	Demand Div Factor	QTY	WATTS EACH**	TOTAL KW SAVED	KWH SAVED PER YR	ANNUAL MONETARY SAVINGS
COMMONS	Halls Middle & Elem	1L400HID	2733	100%	6	458	N6L4T8-HP-LNS-OS	1913	75%	6	222	1.749	4,962	$ 400.39
COMMONS	Halls Middle & Elem	1L400HID	2733	100%	6	458	N8L4T8-SP-LNS-OS-PCDIM	1913	38%	6	192	2.316	5,307	$ 452.42
COMMONS	Halls Middle & Elem	1L1000HID	2733	100%	6	1080	N8L4T8-HP-LNS-OS-PC	1913	38%	6	296	5.814	14,312	$ 1,196.71
COMMONS	Halls Middle & Elem	NOTHING	2733	100%	1	0	PHOTOCELL	2733	100%	1	0	-	-	$ -
COMMONS	Halls Middle & Elem	2L4T8-SP	2733	100%	27	58	2L4T8-LP-OS-HIGH	2914	75%	27	48	0.594	503	$ 63.28
COMMONS	EM/Night	2L4T8-SP-EM	8766	100%	12	58	2L4T8-LP-DUAL-EM-HIGH	8766	100%	12	50	0.096	842	$ 56.98
COMMONS	Halls Middle & Elem	3L4T8-SP	2733	100%	3	85	2L4T8-SP-24RFL	2733	100%	3	54	0.093	254	$ 20.69
COMMONS	EM/Night	3L4T8-SP-EM	8766	100%	2	82	2L4T8-SP-24RFL-EM	8766	100%	2	54	0.056	491	$ 33.24
COMMONS	Halls Middle & Elem	NOTHING	2733	100%	2	0	WCDT	4163	100%	2	0	-	-	$ -
ENTRY VESTIBULE	Halls Middle & Elem	1L70HID	2733	100%	2	90	1L32CF-CONV-PC	1367	50%	2	32	0.148	404	$ 32.93
ENTRY VESTIBULE	Halls Middle & Elem	NOTHING	2733	100%	1	0	PHOTOCELL	2733	100%	1	0	-	-	$ -
STAGE	Storage	3L4T8-SP	2250	20%	11	85	2L4T8-SP-24RFL	2250	20%	11	54	0.068	767	$ 50.90
RAMP / CORRIDOR	Halls Middle & Elem	3L4T8-SP	4163	100%	2	85	2L4T8-SP-24RFL	4163	100%	2	54	0.062	258	$ 19.25
RAMP / CORRIDOR	EM/Night	3L4T8-SP-DUAL-EM	8766	100%	1	82	2L4T8-SP-24RFL-DUAL-EM	8766	100%	1	56	0.026	228	$ 15.43
CHOIR	Class	3L4T8-SP-OS	2365	100%	13	82	2L4T8-SP-24RFL-OS	1656	75%	13	54	0.540	1,359	$ 112.92
CHOIR STORAGE	Storage	3L4T8-SP	2250	20%	2	85	2L4T8-SP-24RFL	2250	20%	2	54	0.012	140	$ 9.26
GIRLS RESTROOM	Halls Middle & Elem	1L32CF	4163	100%	1	32	NO RETRO	4163	100%	1	32	-	-	$ -
GIRLS RESTROOM	Halls Middle & Elem	2L4T8-SP	4163	100%	7	58	2L4T8-LP	4163	100%	7	48	0.070	291	$ 21.73
GIRLS RESTROOM	EM/Night	2L4T8-SP-EM	8766	100%	2	58	2L4T8-LP-DUAL-EM	8766	100%	2	50	0.016	140	$ 9.50
BOYS RESTROOM	Halls Middle & Elem	1L32CF	4163	100%	1	32	NO RETRO	4163	100%	1	32	-	-	$ -
BOYS RESTROOM	Halls Middle & Elem	2L4T8-SP	4163	100%	7	58	2L4T8-LP	4163	100%	7	48	0.070	291	$ 21.73
BOYS RESTROOM	EM/Night	2L4T8-SP-EM	8766	100%	2	58	2L4T8-LP-DUAL-EM	8766	100%	2	50	0.016	140	$ 9.50
CUSTODIAL	Custodial	2L4T8-SP	2250	30%	1	58	NO RETRO	2250	30%	1	58	-	-	$ -
CUSTODIAL	Custodial	NOTHING	2250	30%	1	0	WSIR	2250	30%	1	0	-	-	$ -
GYMNASIUM	Gym	1L400HID	2733	100%	30	458	N6LT8-HP-LNS-WG-OS	1913	75%	30	222	8.745	24,811	$ 2,001.94
GYMNASIUM	Gym	NOTHING	2733	100%	4	0	WCIR	2733	100%	4	0	-	-	$ -
GYMNASIUM	EM/Night	LED EXIT	8766	100%	5	3	NO RETRO	8766	100%	5	3	-	-	$ -
GYM S ENTRY VEST	Halls Middle & Elem	3L4T8-SP	2733	100%	3	85	2L4T8-SP-24RFL-PC	1367	50%	3	54	0.174	475	$ 38.71
GYM S ENTRY VEST	Halls Middle & Elem	NOTHING	2733	100%	1	0	PHOTOCELL	2733	100%	1	0	-	-	$ -
GYM EQUIPMENT 1	Supply	3L4T8-SP	2733	40%	2	85	2L4T8-SP-24RFL-OS	1913	30%	2	54	0.036	258	$ 17.81
GYM EQUIPMENT 1	Supply	NOTHING	2733	40%	1	0	WSIR	2723	40%	1	0	-	-	$ -
GYM EQUIPMENT 2	Supply	3L4T8-SP	2733	40%	6	85	2L4T8-SP-24RFL-OS	1913	30%	6	54	0.107	774	$ 53.42
GYM EQUIPMENT 2	Supply	NOTHING	2733	40%	1	0	WSIR	2733	40%	1	0	-	-	$ -
GYM N ENTRY VEST	Halls Middle & Elem	1L32CF	2733	100%	3	32	NO RETRO	2733	100%	3	32	-	-	$ -
BOYS LOCKER ROOM	Class	3L4T8-SP	2880	100%	10	85	2L4T8-SP-24RFL	2880	100%	10	54	0.310	893	$ 71.78
BOYS LOCKER ROOM	Class	2L4T8-SP	2880	100%	3	58	NO RETRO	2880	100%	3	58	-	-	$ -
BOYS LOCKER ROOM	EM/Night	LED EXIT	8766	100%	1	3	NO RETRO	8766	100%	1	3	-	-	$ -
BOYS COACH	Offices, Private	3L4T8-SP	2880	50%	2	85	2L4T8-SP-24RFL	2880	50%	2	54	0.031	179	$ 12.67
BOYS COACH LOCKER	Offices, Private	3L4T8-SP	2880	50%	1	85	2L4T8-SP-24RFL	2880	50%	1	54	0.016	89	$ 6.33
GIRLS LOCKER ROOM	Class	3L4T8-SP	2880	100%	7	85	2L4T8-SP-24RFL	2880	100%	7	54	0.217	625	$ 50.25
GIRLS LOCKER ROOM	Class	2L4T8-SP	2880	100%	3	58	NO RETRO	2880	100%	3	58	-	-	$ -
GIRLS LOCKER ROOM	EM/Night	LED EXIT	8766	100%	1	3	NO RETRO	8766	100%	1	3	-	-	$ -
GIRLS COACH	Offices, Private	3L4T8-SP	2880	50%	2	85	2L4T8-SP-24RFL	2880	50%	2	54	0.031	179	$ 12.67
GIRLS COACH LOCKER	Offices, Private	3L4T8-SP	2880	50%	1	85	2L4T8-SP-24RFL	2880	50%	1	54	0.016	89	$ 6.33
STAIR/EXIT CORR	Halls Middle & Elem	3L4T8-SP	4163	100%	4	85	2L4T8-SP-24RFL	4163	100%	4	54	0.124	516	$ 38.50
STAIR/EXIT CORR	EM/Night	3L4T8-SP-DUAL-EM	8766	100%	2	82	2L4T8-SP-24RFL-DUAL-EM	8766	100%	2	56	0.052	456	$ 30.87
CHOIR CORR	Halls Middle & Elem	3L4T8-SP	4163	100%	4	85	2L4T8-SP-24RFL	4163	100%	4	54	0.124	516	$ 38.50
CHOIR CORR	EM/Night	3L4T8-SP-DUAL-EM	8766	100%	2	82	2L4T8-SP-24RFL-DUAL-EM	8766	100%	2	56	0.052	456	$ 30.87
CHOIR CORR	EM/Night	LED EXIT	8766	100%	1	3	NO RETRO	8766	100%	1	3	-	-	$ -
KITCHEN	EM/Night	3L4T8-SP-EM	8766	100%	4	82	2L4T8-SP-24RFL-DUAL-EM	8766	100%	4	56	0.104	912	$ 61.73
KITCHEN	Kitchen	3L4T8-SP	1000	100%	11	85	2L4T8-SP-24RFL	1000	100%	11	54	0.341	341	$ 39.53
KITCHEN	EM/Night	LED EXIT	8766	100%	2	3	NO RETRO	8766	100%	2	3	-	-	$ -
KITCHEN OFFICE	Offices, Private	3L4T8-SP	2250	50%	1	85	2L4T8-SP-24RFL-OS	1575	38%	1	54	0.022	106	$ 7.74
KITCHEN OFFICE	Offices, Private	NOTHING	2250	50%	1	0	WSIR	2250	50%	1	0	-	-	$ -
RR	Private RR	3L4T8-SP	2250	10%	1	85	2L4T8-SP-24RFL-OS	1575	8%	1	54	0.004	106	$ 6.77
RR	Private RR	NOTHING	2250	10%	1	0	WSIR	2250	10%	1	0	-	-	$ -
DRY GOODS	Kitchen	3L4T8-SP	1000	100%	2	85	2L4T8-SP-24RFL-OS	700	75%	2	54	0.089	94	$ 10.65
DRY GOODS	Kitchen	NOTHING	1000	100%	1	0	WSIR	1000	100%	1	0	-	-	$ -
MECH	Mechanical	2L4T8-SP	2250	10%	9	58	NO RETRO	2250	10%	9	58	-	-	$ -

BUILDING: East Grand Middle School
LIGHTING CONTRACTOR: RetroTech Systems
ELECTRIC CONSUMPTION RATE: $0.0615 per kWh
ELECTRIC DEMAND RATE: $4.5349 per kW
HEATING FUEL RATE: $8.6421 per MMBtu

ECM 5.1: Lighting System Upgrades

		PRE-RETROFIT					POST-RETROFIT ("AS-BUILT")							
AREA	USAGE TYPE	EXISTING FIXTURE DESCRIPTION	ANNUAL HOURS	Demand Div Factor	QTY	WATTS EACH*	RETROFIT DESCRIPTION	ANNUAL HOURS	Demand Div Factor	QTY	WATTS EACH**	TOTAL KW SAVED	KWH SAVED PER YR	ANNUAL MONETARY SAVINGS
SCHOOL STORE	Storage	3L4T8-SP	2250	20%	4	85	2L4T8-SP-24RFL-OS	1575	15%	4	54	0.036	425	$ 28.07
SCHOOL STORE	Storage	NOTHING	2250	20%	1	0	WSIR	2250	20%	1	0	-	-	$ -
MUSIC ROOM	Class	3L4T8-SP-OS	2365	100%	20	82	2L4T8-SP-24RFL-OS	1656	75%	20	54	0.830	2,090	$ 173.73
MUSIC ROOM	Class	3L4T8-SP-OS	2365	100%	5	82	2L4T8-SP-24RFL-OS	1656	75%	5	54	0.208	523	$ 43.43
MUSIC ROOM	EM/Night	LED EXIT	8766	100%	2	3	NO RETRO	8766	100%	2	3	-	-	$ -
MUSIC OFFICE	Offices, Private	3L4T8-SP	2250	50%	2	85	2L4T8-SP-24RFL-OS	1575	38%	2	54	0.045	212	$ 15.49
MUSIC OFFICE	Offices, Private	NOTHING	2250	50%	1	0	WSIR	2250	50%	1	0	-	-	$ -
INSTRUMENTS	Class	3L4T8-SP	2365	100%	8	85	2L4T8-SP-24RFL-OS	1656	75%	8	54	0.356	893	$ 74.29
INSTRUMENTS	Class	NOTHING	2365	100%	1	0	WCIR	2365	100%	1	0	-	-	$ -
MUSIC STORAGE	Storage	3L4T8-SP	2250	20%	2	85	2L4T8-SP-24RFL-OS	1575	15%	2	54	0.018	212	$ 14.03
MUSIC STORAGE	Storage	NOTHING	2250	20%	1	0	WSIR	2250	20%	1	0	-	-	$ -
ELECTRIC ROOM	Mechanical	3L4T8-SP	2250	10%	2	85	2L4T8-SP-24RFL	2250	10%	2	54	0.006	140	$ 8.92
MUSIC CORR	Halls Middle & Elem	3L4T8-SP	4163	100%	7	85	2L4T8-SP-24RFL	4163	100%	7	54	0.217	903	$ 67.37
MUSIC CORR	EM/Night	3L4T8-SP-DUAL-EM	8766	100%	2	82	2L4T8-SP-24RFL-DUAL-EM	8766	100%	2	56	0.052	456	$ 30.87
MUSIC CORR	EM/Night	LED EXIT	8766	100%	1	3	NO RETRO	8766	100%	1	3	-	-	$ -
MAIN OFFICE	Common Admin	3L4T8-SP	2250	100%	14	85	2L4T8-SP-24RFL	2250	100%	14	54	0.434	977	$ 83.68
MAIN OFFICE	EM/Night	3L4T8-SP-DUAL-EM	8766	100%	4	82	2L4T8-SP-24RFL-DUAL-EM	8766	100%	4	56	0.104	912	$ 61.73
MAIN OFFICE	EM/Night	LED EXIT	8766	100%	1	3	NO RETRO	8766	100%	1	3	-	-	$ -
MAIN OFFICE	Common Admin	1L32CF	2250	100%	10	32	NO RETRO	2250	100%	10	32	-	-	$ -
CLINIC	Common Admin	3L4T8-SP	2250	100%	6	85	NO RETRO	2250	100%	6	85	-	-	$ -
CLINIC	Common Admin	2L4T8-SP	2250	100%	1	58	NO RETRO	2250	100%	1	58	-	-	$ -
CUSTODIAL OFFICE	Offices, Private	3L4T8-SP	2250	50%	2	85	2L4T8-SP-24RFL-OS	1575	38%	2	54	0.045	212	$ 15.49
CUSTODIAL OFFICE	Offices, Private	NOTHING	2250	50%	1	0	WSIR	2250	50%	1	0	-	-	$ -
PRINCIPAL OFFICE	Offices, Private	3L4T8-SP	2250	50%	6	85	2L4T8-SP-24RFL-OS	1575	38%	6	54	0.134	637	$ 46.46
PRINCIPAL OFFICE	Offices, Private	NOTHING	2250	50%	1	0	WCDT	2250	50%	1	0	-	-	$ -
ELECTRIC ROOM	Mechanical	3L4T8-SP	2250	10%	4	85	2L4T8-SP-24RFL	1575	10%	4	54	0.012	425	$ 26.80
WORK ROOM	Offices, Private	3L4T8-SP	2250	50%	6	85	2L4T8-SP-24RFL	2250	50%	6	54	0.093	419	$ 30.80
STAFF LOUNGE	Offices, Private	3L4T8-SP	2250	50%	8	85	2L4T8-SP-24RFL-OS	1575	38%	8	54	0.178	850	$ 61.94
STAFF LOUNGE	Offices, Private	NOTHING	2250	50%	1	0	WCDT	2250	50%	1	0	-	-	$ -
RRS	Private RR	2L4T8-SP	2250	10%	2	58	2L4T8-SP-NR-OS	1575	8%	2	58	0.003	78	$ 4.97
RRS	Private RR	NOTHING	2250	10%	2	0	WSIR	2250	10%	2	0	-	-	$ -
DETENTION	Offices, Private	3L4T8-SP	2250	50%	4	85	2L4T8-SP-24RFL-OS	1575	38%	4	54	0.089	425	$ 30.97
DETENTION	Offices, Private	NOTHING	2250	50%	1	0	WCDT	2250	50%	1	0	-	-	$ -
RECORDS	Offices, Private	3L4T8-SP	2250	50%	4	85	2L4T8-SP-24RFL-OS	1575	38%	4	54	0.089	425	$ 30.97
RECORDS	Offices, Private	NOTHING	2250	50%	1	0	WSIR	2250	50%	1	0	-	-	$ -
CONFERENCE ROOM	Conference	3L4T8-SP	2250	40%	6	85	2L4T8-SP-24RFL-OS	1575	30%	6	54	0.107	637	$ 45.00
CONFERENCE ROOM	Conference	NOTHING	2250	40%	1	0	CIR	2250	40%	1	0	-	-	$ -
COUNSELING	Offices, Private	3L4T8-SP	2250	50%	9	85	2L4T8-SP-24RFL	2250	50%	9	54	0.140	628	$ 46.20
COUNSELING	EM/Night	3L4T8-SP-DUAL-EM	8766	100%	2	82	2L4T8-SP-24RFL-DUAL-EM	8766	100%	2	56	0.052	456	$ 30.87
COUNSELING	EM/Night	LED EXIT	8766	100%	2	3	NO RETRO	8766	100%	2	3	-	-	$ -
COUNSELING CONF	Conference	3L4T8-SP	2250	40%	4	85	2L4T8-SP-24RFL-OS	1575	30%	4	54	0.071	425	$ 30.00
COUNSELING CONF	Conference	NOTHING	2250	40%	1	0	WSDT	2250	40%	1	0	-	-	$ -
COUNSELING RECORDS	Supply	2L4T8-SP	2250	40%	2	58	2L4T8-SP-NR-OS	1575	30%	2	58	0.012	78	$ 5.45
COUNSELING RECORDS	Supply	NOTHING	2250	40%	1	0	WSIR	2250	40%	1	0	-	-	$ -
COUNSELING OFFICE 1	Offices, Private	3L4T8-SP	2250	50%	6	85	2L4T8-SP-24RFL-OS	1575	38%	6	54	0.134	637	$ 46.46
COUNSELING OFFICE 1	Offices, Private	NOTHING	2250	50%	1	0	WSDT	2250	50%	1	0	-	-	$ -
COUNSELING OFFICE 2	Offices, Private	3L4T8-SP	2250	50%	6	85	2L4T8-SP-24RFL-OS	1575	38%	6	54	0.134	637	$ 46.46
COUNSELING OFFICE 2	Offices, Private	NOTHING	2250	50%	1	0	WSDT	2250	50%	1	0	-	-	$ -
ELEVATOR ROOM	Mechanical	2L4T8-SP	2250	10%	1	58	NO RETRO	2250	10%	1	58	-	-	$ -
CLASS 113	Class	3L4T8-SP	2365	100%	19	85	2L4T8-SP-24RFL	2365	100%	19	54	0.589	1,393	$ 117.73
STOR 113	Storage	3L4T8-SP	2250	20%	2	85	2L4T8-SP-24RFL-OS	1575	15%	2	54	0.018	212	$ 14.03
STOR 113	Storage	NOTHING	2250	20%	1	0	WSIR	2250	20%	1	0	-	-	$ -
TECH LAB 112	Class	3L4T8-SP-OS	2365	100%	21	82	2L4T8-SP-24RFL-OS	1656	75%	21	54	0.872	2,195	$ 182.41
TECH OFFICE	Class	3L4T8-SP	2365	100%	3	85	2L4T8-SP-24RFL-OS	1656	75%	3	54	0.134	335	$ 27.86
TECH OFFICE	Offices, Private	NOTHING	2250	50%	1	0	WSDT	2250	50%	1	0	-	-	$ -
ART CLASS 111	Class	3L4T8-SP-OS	2365	100%	16	82	NO RETRO	1656	100%	16	82	-	930	$ 57.21
ART STORAGE	Storage	3L4T8-SP	2250	20%	3	85	2L4T8-SP-24RFL-OS	1575	15%	3	54	0.027	319	$ 21.05
ART STORAGE	Storage	NOTHING	2250	20%	1	0	WSIR	2250	20%	1	0	-	-	$ -
ELECTRIC ROOM	Mechanical	2L4T8-SP	2250	10%	1	58	NO RETRO	2250	10%	1	58	-	-	$ -

BUILDING: East Grand Middle School
LIGHTING CONTRACTOR: RetroTech Systems
ELECTRIC CONSUMPTION RATE: $0.0615 per kWh
ELECTRIC DEMAND RATE: $4.5349 per kW
HEATING FUEL RATE: $8.6421 per MMBtu

ECM 5.1: Lighting System Upgrades

		PRE-RETROFIT					POST-RETROFIT ("AS-BUILT")							
AREA	USAGE TYPE	EXISTING FIXTURE DESCRIPTION	ANNUAL HOURS	Demand Div Factor	QTY	WATTS EACH*	RETROFIT DESCRIPTION	ANNUAL HOURS	Demand Div Factor	QTY	WATTS EACH**	TOTAL KW SAVED	KWH SAVED PER YR	ANNUAL MONETARY SAVINGS
PROJECT ROOM	Storage	3L4T8-SP-DUAL	2250	20%	4	90	NO RETRO	2250	20%	4	90	-	-	$ -
ART OFFICE	Offices, Private	3L4T8-SP	2250	50%	2	85	2L4T8-SP-24RFL-OS	1575	38%	2	54	0.045	212	$ 15.49
ART OFFICE	Offices, Private	NOTHING	2250	50%	1	0	WSIR	2250	50%	1	0	-	-	$ -
ART WORK ROOM	Class	3L4T8-SP	2365	100%	2	85	2L4T8-SP-24RFL-OS	1656	75%	2	54	0.089	223	$ 18.57
ART WORK ROOM	Class	NOTHING	2365	100%	1	0	WSIR	2365	100%	1	0	-	-	$ -
TECH LAB 130	Class	3L4T8-SP-OS	2365	100%	15	82	2L4T8-SP-24RFL-OS	1656	75%	15	54	0.623	1,568	$ 130.29
TECH LAB 130	Class	2L4T8-SP-OS	2365	100%	2	58	NO RETRO	2365	100%	2	58	-	-	$ -
TECH OFFICE	Offices, Private	3L4T8-SP	2250	50%	3	85	2L4T8-SP-24RFL-OS	1575	38%	3	54	0.067	319	$ 23.23
TECH OFFICE	Offices, Private	NOTHING	2250	50%	1	0	WSIR	2250	50%	1	0	-	-	$ -
ELECTRIC ROOM	Mechanical	3L4T8-SP	2250	10%	1	85	2L4T8-SP-24RFL	2250	10%	1	54	0.003	70	$ 4.46
CUSTODIAL	Custodial	2L4T8-SP	2250	30%	1	58	2L4T8-SP-NR-OS	1125	23%	1	58	0.004	65	$ 4.25
CUSTODIAL	Custodial	NOTHING	2250	30%	1	0	WSIR	2250	30%	1	0	-	-	$ -
STAFF RR	Private RR	2L4T8-SP	2250	10%	1	58	2L4T8-SP-NR-OS	1575	8%	1	58	0.001	39	$ 2.49
STAFF RR	Private RR	NOTHING	2250	10%	1	0	WSIR	2250	10%	1	0	-	-	$ -
CLASS 131	Class	3L4T8-SP-OS	2365	100%	12	82	2L4T8-SP-24RFL-OS	1656	75%	12	54	0.498	1,254	$ 104.24
CLASS 132	Class	3L4T8-SP-OS	2365	100%	12	82	2L4T8-SP-24RFL-OS	1656	75%	12	54	0.498	1,254	$ 104.24
CLASS 132	Class	3L4T8-SP-OS	2365	100%	1	82	2L4T8-SP-24RFL-OS	1656	75%	1	54	0.042	105	$ 8.69
CLASS 132	EM/Night	LED EXIT	8766	100%	1	3	NO RETRO	8766	100%	1	3	-	-	$ -
SCIENCE STORAGE	Storage	3L4T8-SP	2250	20%	2	85	2L4T8-SP-24RFL-OS	1575	15%	2	54	0.018	212	$ 14.03
SCIENCE STORAGE	Storage	NOTHING	2250	20%	1	0	WSIR	2250	20%	1	0	-	-	$ -
SCIENCE OFFICE	Offices, Private	3L4T8-SP	2250	50%	2	85	2L4T8-SP-24RFL-OS	1575	38%	2	54	0.045	212	$ 15.49
SCIENCE OFFICE	Offices, Private	NOTHING	2250	50%	1	0	WSIR	2250	50%	1	0	-	-	$ -
CLASS 133	Class	3L4T8-SP-OS	2365	100%	11	82	2L4T8-SP-24RFL-OS	1656	75%	11	54	0.457	1,150	$ 95.55
CLASS 134	Class	3L4T8-SP-OS	2365	100%	11	82	2L4T8-SP-24RFL-OS	1656	75%	11	54	0.457	1,150	$ 95.55
CLASS 135	Class	3L4T8-SP-OS	2365	100%	12	82	2L4T8-SP-24RFL-OS	1656	75%	12	54	0.498	1,254	$ 104.24
CLASS 137	Class	3L4T8-SP-OS	2365	100%	12	82	2L4T8-SP-24RFL-OS	1656	75%	12	54	0.498	1,254	$ 104.24
TECH LAB 136	Class	3L4T8-SP	2365	100%	6	85	2L4T8-SP-24RFL-OS	1656	75%	6	54	0.267	670	$ 55.72
TECH LAB 136	Class	NOTHING	2365	100%	1	0	WCDT	2365	100%	1	0	-	-	$ -
TEAM WORK ROOM	Offices, Private	3L4T8-SP	2250	50%	4	85	2L4T8-SP-24RFL-OS	1575	38%	4	54	0.089	425	$ 30.97
TEAM WORK ROOM	Offices, Private	NOTHING	2250	50%	1	0	WSIR	2250	50%	1	0	-	-	$ -
CLASS 138	Class	3L4T8-SP-OS	2365	100%	10	82	2L4T8-SP-24RFL-OS	1656	75%	10	54	0.415	1,045	$ 86.86
GIRLS RESTROOM	Halls Middle & Elem	1L32CF	4163	100%	1	32	NO RETRO	4163	100%	1	32	-	-	$ -
GIRLS RESTROOM	Halls Middle & Elem	2L4T8-SP	4163	100%	8	58	2L4T8-LP	4163	100%	8	48	0.080	333	$ 24.84
GIRLS RESTROOM	EM/Night	2L4T8-SP-EM	8766	100%	1	58	2L4T8-LP-DUAL-EM	8766	100%	1	50	0.008	70	$ 4.75
BOYS RESTROOM	Halls Middle & Elem	1L32CF	4163	100%	1	32	NO RETRO	4163	100%	1	32	-	-	$ -
BOYS RESTROOM	Halls Middle & Elem	2L4T8-SP	4163	100%	8	58	2L4T8-LP	4163	100%	8	48	0.080	333	$ 24.84
BOYS RESTROOM	EM/Night	2L4T8-SP-EM	8766	100%	1	58	2L4T8-LP-DUAL-EM	8766	100%	1	50	0.008	70	$ 4.75
SUPPLY ROOM	Supply	3L4T8-SP	2250	40%	1	85	2L4T8-SP-24RFL-OS	1575	30%	1	54	0.018	106	$ 7.50
SUPPLY ROOM	Supply	NOTHING	2250	40%	1	0	WSIR	2250	40%	1	0	-	-	$ -
DATA ROOM	Mechanical	3L4T8-SP	2250	10%	1	85	2L4T8-SP-24RFL-OS	1575	8%	1	54	0.004	106	$ 6.77
DATA ROOM	Mechanical	NOTHING	2250	10%	1	0	WSIR	2250	10%	1	0	-	-	$ -
SUPPLY ROOM	Supply	3L4T8-SP	2250	40%	1	85	2L4T8-SP-24RFL-OS	1575	30%	1	54	0.018	106	$ 7.50
SUPPLY ROOM	Supply	NOTHING	2250	40%	1	0	WSIR	2250	40%	1	0	-	-	$ -
CLASS 128	Class	3L4T8-SP-OS	2365	100%	10	82	2L4T8-SP-24RFL-OS	1656	75%	10	54	0.415	1,045	$ 86.86
CLASS 127	Class	3L4T8-SP-OS	2365	100%	12	82	2L4T8-SP-24RFL-OS	1656	75%	12	54	0.498	1,254	$ 104.24
CLASS 125	Class	3L4T8-SP-OS	2365	100%	12	82	2L4T8-SP-24RFL-OS	1656	75%	12	54	0.498	1,254	$ 104.24
CLASS 125	Class	3L4T8-SP-OS	2365	100%	1	82	2L4T8-SP-24RFL-OS	1656	75%	1	54	0.042	105	$ 8.69
CLASS 125	EM/Night	LED EXIT	8766	100%	1	3	NO RETRO	8766	100%	1	3	-	-	$ -
SCIENCE STORAGE	Storage	3L4T8-SP	2250	20%	2	85	2L4T8-SP-24RFL-OS	1575	15%	2	54	0.018	212	$ 14.03
SCIENCE STORAGE	Storage	NOTHING	2250	20%	1	0	WSIR	2250	20%	1	0	-	-	$ -
SCIENCE OFFICE	Offices, Private	3L4T8-SP	2250	50%	2	85	2L4T8-SP-24RFL-OS	1575	38%	2	54	0.045	212	$ 15.49
SCIENCE OFFICE	Offices, Private	NOTHING	2250	50%	1	0	WSIR	2250	50%	1	0	-	-	$ -
CLASS 124	Class	3L4T8-SP-OS	2365	100%	11	82	2L4T8-SP-24RFL-OS	1656	75%	11	54	0.457	1,150	$ 95.55
CLASS 123	Class	3L4T8-SP-OS	2365	100%	11	82	2L4T8-SP-24RFL-OS	1656	75%	11	54	0.457	1,150	$ 95.55
CLASS 122	Class	3L4T8-SP-OS	2365	100%	12	82	2L4T8-SP-24RFL-OS	1656	75%	12	54	0.498	1,254	$ 104.24
CLASS 121	Class	3L4T8-SP-OS	2365	100%	12	82	2L4T8-SP-24RFL-OS	1656	75%	12	54	0.498	1,254	$ 104.24
STORAGE	Storage	3L4T8-SP	2250	20%	2	85	2L4T8-SP-24RFL-OS	1575	15%	2	54	0.018	212	$ 14.03
STORAGE	Storage	NOTHING	2250	20%	1	0	WSIR	2250	20%	1	0	-	-	$ -
TESTING	Offices, Private	3L4T8-SP	2250	50%	2	85	2L4T8-SP-24RFL-OS	1575	38%	2	54	0.045	212	$ 15.49

BUILDING: East Grand Middle School
LIGHTING CONTRACTOR: RetroTech Systems
ELECTRIC CONSUMPTION RATE: $0.0615 per kWh
ELECTRIC DEMAND RATE: $4.5349 per kW
HEATING FUEL RATE: $8.6421 per MMBtu

ECM 5.1: Lighting System Upgrades

		PRE-RETROFIT					POST-RETROFIT ("AS-BUILT")							
AREA	USAGE TYPE	EXISTING FIXTURE DESCRIPTION	ANNUAL HOURS	Demand Div Factor	QTY	WATTS EACH*	RETROFIT DESCRIPTION	ANNUAL HOURS	Demand Div Factor	QTY	WATTS EACH**	TOTAL KW SAVED	KWH SAVED PER YR	ANNUAL MONETARY SAVINGS
TESTING	Offices, Private	NOTHING	2250	50%	1	0	WSIR	2250	50%	1	0	-	-	$ -
OFFICE	Offices, Private	3L4T8-SP	2250	50%	2	85	2L4T8-SP-24RFL-OS	1575	38%	2	54	0.045	212	$ 15.49
OFFICE	Offices, Private	NOTHING	2250	50%	1	0	WSIR	2250	50%	1	0	-	-	$ -
TECH LAB	Class	3L4T8-SP	2365	100%	6	85	2L4T8-SP-24RFL-OS	1656	75%	6	54	0.267	670	$ 55.72
TECH LAB	Class	NOTHING	2365	100%	1	0	WCDT	2365	100%	1	0	-	-	$ -
TEAM WORK ROOM	Offices, Private	3L4T8-SP	2250	50%	4	85	2L4T8-SP-24RFL-OS	1575	38%	4	54	0.089	425	$ 30.97
TEAM WORK ROOM	Offices, Private	NOTHING	2250	50%	1	0	WSIR	2250	50%	1	0	-	-	$ -
GIRLS RESTROOM	Halls Middle & Elem	1L32CF	4163	100%	1	32	NO RETRO	4163	100%	1	32	-	-	$ -
GIRLS RESTROOM	Halls Middle & Elem	2L4T8-SP	4163	100%	8	58	2L4T8-LP	4163	100%	8	48	0.080	333	$ 24.84
GIRLS RESTROOM	EM/Night	2L4T8-SP-EM	8766	100%	1	58	2L4T8-LP-DUAL-EM	8766	100%	1	50	0.008	70	$ 4.75
BOYS RESTROOM	Halls Middle & Elem	1L32CF	4163	100%	1	32	NO RETRO	4163	100%	1	32	-	-	$ -
BOYS RESTROOM	Halls Middle & Elem	2L4T8-SP	4163	100%	8	58	2L4T8-LP	4163	100%	8	48	0.080	333	$ 24.84
BOYS RESTROOM	EM/Night	2L4T8-SP-EM	8766	100%	1	58	2L4T8-LP-DUAL-EM	8766	100%	1	50	0.008	70	$ 4.75
SUPPLY ROOM	Supply	3L4T8-SP	2250	40%	1	85	2L4T8-SP-24RFL-OS	1575	30%	1	54	0.018	106	$ 7.50
SUPPLY ROOM	Supply	NOTHING	2250	40%	1	0	WSIR	2250	40%	1	0	-	-	$ -
SUPPLY ROOM	Supply	3L4T8-SP	2250	40%	1	85	2L4T8-SP-24RFL-OS	1575	30%	1	54	0.018	106	$ 7.50
SUPPLY ROOM	Supply	NOTHING	2250	40%	1	0	WSIR	2250	40%	1	0	-	-	$ -
CUSTODIAL	Custodial	2L4T8-SP	2250	30%	1	58	2L4T8-SP-NR-OS	1575	23%	1	58	0.004	39	$ 2.64
CUSTODIAL	Custodial	NOTHING	2250	30%	1	0	WSIR	2250	30%	1	0	-	-	$ -
STAFF RR	Private RR	2L4T8-SP	2250	10%	1	58	2L4T8-SP-NR-OS	1575	8%	1	58	0.001	39	$ 2.49
STAFF RR	Private RR	NOTHING	2250	10%	1	0	WSIR	2250	10%	1	0	-	-	$ -
MEDIA CENTER	Library	3L4T8-SP	2365	90%	26	85	2L4T8-SP-24RFL-HIGH	2365	90%	26	54	0.725	1,906	$ 156.72
MEDIA CENTER	Library	3L4T8-SP	2365	90%	6	85	2L4T8-SP-24RFL	2365	90%	6	54	0.167	440	$ 36.17
MEDIA CENTER	Library	3L4T8-SP	2365	90%	5	85	2L4T8-SP-24RFL-PCDIM	1183	45%	5	58	0.252	662	$ 54.43
MEDIA CLASS AREA	Library	3L4T8-SP	2365	90%	10	85	2L4T8-SP-24RFL-OS	1656	68%	10	54	0.401	1,116	$ 90.44
MEDIA CLASS AREA	Library	NOTHING	2365	90%	1	0	WCDT	2365	90%	1	0	-	-	$ -
MEDIA OFFICE	Offices, Private	3L4T8-SP	2250	50%	2	85	2L4T8-SP-24RFL-OS	1575	38%	2	54	0.045	212	$ 15.49
MEDIA OFFICE	Offices, Private	NOTHING	2250	50%	1	0	WSDT	2250	50%	1	0	-	-	$ -
MEDIA WORK AREA	Offices, Private	3L4T8-SP	2250	50%	10	85	2L4T8-SP-24RFL-OS	1575	38%	10	54	0.223	1,062	$ 77.43
MEDIA WORK AREA	Offices, Private	NOTHING	2250	50%	1	0	WCDT	2250	50%	1	0	-	-	$ -
MEDIA WORK A/V STOR	Storage	3L4T8-SP	2250	20%	2	85	2L4T8-SP-24RFL	2250	20%	2	54	0.012	140	$ 9.26
MECH ROOM	Mechanical	2L4T8-SP	2250	10%	10	58	NO RETRO	2250	10%	10	58	-	-	$ -
MECH ROOM	EM/Night	LED EXIT	8766	100%	3	3	NO RETRO	8766	100%	3	3	-	-	$ -
COMPUTER LAB	Class	3L4T8-SP-OS	2365	100%	12	82	2L4T8-SP-24RFL-OS	1656	75%	12	54	0.498	1,254	$ 104.24
CLASS 211	Class	3L4T8-SP-OS	2365	100%	12	82	2L4T8-SP-24RFL-OS	1656	75%	12	54	0.498	1,254	$ 104.24
CLASS 211	EM/Night	LED EXIT	8766	100%	1	3	NO RETRO	8766	100%	1	3	-	-	$ -
WORK ROOM	Offices, Private	3L4T8-SP	2250	50%	3	85	2L4T8-SP-24RFL-OS	1575	38%	3	54	0.067	319	$ 23.23
WORK ROOM	Offices, Private	NOTHING	2250	50%	1	0	WSDT	2250	50%	1	0	-	-	$ -
CORRIDOR	Halls Middle & Elem	3L4T8-SP	4163	100%	2	85	2L4T8-SP-24RFL	4163	100%	2	54	0.062	258	$ 19.25
CLASS 212	Class	3L4T8-SP-OS	2365	100%	6	82	2L4T8-SP-24RFL-OS	1656	75%	6	54	0.249	627	$ 52.12
CLASS 212	Class	NOTHING	2365	100%	1	0	WCDT	2365	100%	1	0	-	-	$ -
CLASS 213	Class	3L4T8-SP-OS	2365	100%	10	82	2L4T8-SP-24RFL-OS	1656	75%	10	54	0.415	1,045	$ 86.86
CLASS 213	Class	3L2T8-SP-OS	2365	100%	3	45	NO RETRO	2365	100%	3	45	-	-	$ -
ELECTRIC ROOM	Mechanical	3L4T8-SP	2250	10%	2	85	2L4T8-SP-24RFL	2250	10%	2	54	0.006	140	$ 8.92
CLASS 214	Class	3L4T8-SP-OS	2365	100%	9	82	2L4T8-SP-24RFL-OS	1656	75%	9	54	0.374	941	$ 78.18
CLASS 214	Class	3L2T8-SP-OS	2365	100%	2	45	NO RETRO	2365	100%	2	45	-	-	$ -
CLASS 215	Class	3L4T8-SP-OS	2365	100%	9	82	2L4T8-SP-24RFL-OS	1656	75%	9	54	0.374	941	$ 78.18
CLASS 215	Class	3L2T8-SP-OS	2365	100%	2	45	NO RETRO	2365	100%	2	45	-	-	$ -
CLASS 216	Class	3L4T8-SP-OS	2365	100%	9	82	2L4T8-SP-24RFL-OS	1656	75%	9	54	0.374	941	$ 78.18
CLASS 216	Class	3L2T8-SP-OS	2365	100%	2	45	NO RETRO	2365	100%	2	45	-	-	$ -
CUSTODIAL / MECH	Custodial	2L4T8-SP	2250	30%	9	58	NO RETRO	2250	30%	9	58	-	-	$ -
CUSTODIAL / MECH	EM/Night	LED EXIT	8766	100%	1	3	NO RETRO	8766	100%	1	3	-	-	$ -
GIRLS RESTROOM	Halls Middle & Elem	1L32CF	4163	100%	1	32	NO RETRO	4163	100%	1	32	-	-	$ -
GIRLS RESTROOM	Halls Middle & Elem	2L4T8-SP	4163	100%	7	58	2L4T8-LP	4163	100%	7	48	0.070	291	$ 21.73
GIRLS RESTROOM	EM/Night	2L4T8-SP-EM	8766	100%	1	58	2L4T8-LP-DUAL-EM	8766	100%	1	50	0.008	70	$ 4.75
BOYS RESTROOM	Halls Middle & Elem	1L32CF	4163	100%	1	32	NO RETRO	4163	100%	1	32	-	-	$ -
BOYS RESTROOM	Halls Middle & Elem	2L4T8-SP	4163	100%	7	58	2L4T8-LP	4163	100%	7	48	0.070	291	$ 21.73
BOYS RESTROOM	EM/Night	2L4T8-SP-EM	8766	100%	1	58	2L4T8-LP-DUAL-EM	8766	100%	1	50	0.008	70	$ 4.75
STAIR	Halls Middle & Elem	3L4T8-SP	4163	100%	5	85	2L4T8-SP-24RFL	4163	100%	5	54	0.155	645	$ 48.12

BUILDING:	East Grand Middle School	
LIGHTING CONTRACTOR:	RetroTech Systems	
ELECTRIC CONSUMPTION RATE:	$0.0615	per kWh
ELECTRIC DEMAND RATE:	$4.5349	per kW
HEATING FUEL RATE:	$8.6421	per MMBtu

ECM 5.1: Lighting System Upgrades

		PRE-RETROFIT					POST-RETROFIT ("AS-BUILT")							
AREA	USAGE TYPE	EXISTING FIXTURE DESCRIPTION	ANNUAL HOURS	Demand Div Factor	QTY	WATTS EACH*	RETROFIT DESCRIPTION	ANNUAL HOURS	Demand Div Factor	QTY	WATTS EACH**	TOTAL KW SAVED	KWH SAVED PER YR	ANNUAL MONETARY SAVINGS
STAIR	EM/Night	3L4T8-SP-EM	8766	100%	1	82	2L4T8-SP-24RFL-EM	8766	100%	1	54	0.028	245	$ 16.62
SINKS	Halls Middle & Elem	2L4T8-SP	4163	100%	3	58	2L4T8-LP	4163	100%	3	48	0.030	125	$ 9.31
STAFF RR	Private RR	2L4T8-SP	2250	10%	1	58	2L4T8-SP-NR-OS	1575	8%	1	58	0.001	39	$ 2.49
STAFF RR	Private RR	NOTHING	2250	10%	1	0	WSIR	2250	10%	1	0	-	-	$ -
TEAM WORK ROOM	Offices, Private	3L4T8-SP	2250	50%	6	85	2L4T8-SP-24RFL-OS	1575	38%	6	54	0.134	637	$ 46.46
TEAM WORK ROOM	Offices, Private	NOTHING	2250	50%	1	0	WSIR	2250	50%	1	0	-	-	$ -
MAIN STAIR	Halls Middle & Elem	3L4T8-SP	4163	100%	2	85	2L4T8-SP-24RFL-30	4163	100%	2	54	0.062	258	$ 19.25
2ND HALLS	Halls Middle & Elem	3L4T8-SP	4163	100%	2	85	2L4T8-SP-24RFL-24'	4163	100%	2	54	0.062	258	$ 19.25
2ND HALLS	Halls Middle & Elem	3L4T8-SP	4163	100%	30	85	2L4T8-SP-24RFL	4163	100%	30	54	0.930	3,872	$ 288.74
2ND HALLS	EM/Night	3L4T8-SP-EM	8766	100%	6	82	2L4T8-SP-24RFL-EM	8766	100%	6	54	0.168	1,473	$ 99.72
2ND HALLS	EM/Night	LED EXIT	8766	100%	6	3	NO RETRO	8766	100%	6	3	-	-	$ -
2ND DISPLAY CASE	Halls Middle & Elem	1L4T8-SP	4163	100%	2	32	1L4T8-LP	4163	100%	2	25	0.014	58	$ 4.35
1ST HALLS	Halls Middle & Elem	3L4T8-SP	4163	100%	76	85	2L4T8-SP-24RFL	4163	100%	76	54	2.356	9,808	$ 731.48
1ST HALLS	EM/Night	3L4T8-SP-EM	8766	100%	18	82	2L4T8-SP-24RFL-EM	8766	100%	18	54	0.504	4,418	$ 299.17
1ST HALLS	EM/Night	LED EXIT	8766	100%	12	3	NO RETRO	8766	100%	12	3	-	-	$ -
1ST DISPLAY CASE	Halls Middle & Elem	1L4T8-SP	4163	100%	6	32	1L4T8-LP	4163	100%	6	25	0.042	175	$ 13.04
TOTALS					1169					1169		45.887	143,974	$ 11,352.60

* Based on ANSI wattages - to be verified by contractor
** Based on manufacturer's wattages - to be verified by contractor

BUILDING:	Fraser Valley Elementary	
LIGHTING CONTRACTOR:	RetroTech Systems	
ELECTRIC CONSUMPTION RATE:	$0.0594	per kWh
ELECTRIC DEMAND RATE:	$4.5349	per kW
HEATING FUEL RATE:	$8.6421	per MMBtu

ECM 5.1: Lighting System Upgrades

		PRE-RETROFIT					POST-RETROFIT ("AS-BUILT")							
AREA	USAGE TYPE	EXISTING FIXTURE DESCRIPTION	ANNUAL HOURS	Demand Div Factor	QTY	WATTS EACH*	RETROFIT DESCRIPTION	ANNUAL HOURS	Demand Div Factor	QTY	WATTS EACH**	TOTAL KW SAVED	KWH SAVED PER YR	ANNUAL MONETARY SAVINGS
MAIN OFFICE	Offices Admin	4L4T8-LP	2271	90%	4	98	2L4T8-SP-24RFL	2271	90%	4	54	0.158	400	$ 32.37
NURSE	Offices Admin	4L4T8-LP	2271	90%	3	98	NO RETRO	2271	90%	3	98	-	-	$ -
RESTROOM	Private RR	2L100IN	2250	10%	1	200	N2L2T8-SP-2'WL	2250	10%	1	32	0.017	378	$ 23.38
PRINCIPAL OFFICE	Offices, Private	4L4T8-LP	2271	50%	4	98	2L4T8-SP-24RFL-OS	1590	38%	4	54	0.115	547	$ 38.75
PRINCIPAL OFFICE	Offices, Private	NOTHING	2271	50%	1	0	WSIR	2271	50%	1	0	-	-	$ -
FILE ROOM	Offices, Private	1L8T8-SP	2271	50%	1	70	1L8T8-SP-NR-OS	1590	38%	1	70	0.009	48	$ 3.31
FILE ROOM	Offices, Private	NOTHING	2271	50%	1	0	WSIR	2271	50%	1	0	-	-	$ -
CONFERENCE ROOM	Conference	4L4T8-LP	2271	40%	4	98	4L4T8-LP-NR-OS	1590	30%	4	98	0.039	267	$ 18.00
CONFERENCE ROOM	Conference	NOTHING	2271	40%	1	0	WSIR	2271	40%	1	0	-	-	$ -
WORK ROOM	Offices, Private	4L4T8-LP	2271	50%	6	98	2L4T8-SP-24RFL-OS	1590	38%	6	54	0.173	820	$ 58.12
WORK ROOM	Offices, Private	NOTHING	2271	50%	1	0	WCDT	2271	50%	1	0	-	-	$ -
ART ROOM	Class	4L4T8-LP-OS	2365	100%	12	98	NO RETRO	2365	100%	12	98	-	-	$ -
ART STORAGE	Storage	3L4T8-SP	2250	20%	2	85	3L4T8-SP-NR-OS	1575	15%	2	85	0.009	115	$ 7.28
ART STORAGE	Storage	NOTHING	2250	20%	1	0	WSIR	2250	20%	1	0	-	-	$ -
CLASS 173	Class	3L4T8-SP-OS	2365	100%	12	82	NO RETRO	2365	100%	12	82	-	-	$ -
CLASS 173 RR	Private RR	2L4T8-SP	2250	10%	1	58	NO RETRO	2250	10%	1	58	-	-	$ -
CLASS 176	Class	3L4T8-SP-OS	2365	100%	12	82	NO RETRO	2365	100%	12	82	-	-	$ -
CLASS 176 RR	Private RR	2L4T8-SP	2250	10%	1	58	NO RETRO	2250	10%	1	58	-	-	$ -
CLASS 178	Class	3L4T8-SP-OS	2365	100%	12	82	NO RETRO	2365	100%	12	82	-	-	$ -
CLASS 178 RR	Private RR	2L4T8-SP	2250	10%	1	58	NO RETRO	2250	10%	1	58	-	-	$ -
CLASS 183	Class	3L4T8-SP-OS	2365	100%	12	82	NO RETRO	2365	100%	12	82	-	-	$ -
CLASS 183 RR	Private RR	2L4T8-SP	2250	10%	1	58	NO RETRO	2250	10%	1	58	-	-	$ -
CLASS 185	Class	3L4T8-SP-OS	2365	100%	12	82	NO RETRO	2365	100%	12	82	-	-	$ -
CLASS 185 RR	Private RR	2L4T8-SP	2250	10%	1	58	NO RETRO	2250	10%	1	58	-	-	$ -
CLASS 188	Class	3L4T8-SP-OS	2365	100%	12	82	NO RETRO	2365	100%	12	82	-	-	$ -
CLASS 188 RR	Private RR	2L4T8-SP	2250	10%	1	58	NO RETRO	2250	10%	1	58	-	-	$ -
MECH / MAINT	Mechanical	4L4T8-SP	2250	10%	3	112	NO RETRO	2250	10%	3	112	-	-	$ -
MECH / MAINT	EM/Night	4L4T8-SP-EM	8766	100%	1	112	4L4T8-LP-DUAL	8766	100%	1	96	0.016	140	$ 9.21
CLASS 113	Class	4L4T8-LP	2455	100%	12	98	2L4T8-SP-24RFL-OS	1719	75%	12	54	0.690	1,773	$ 142.91
CLASS 113	Class	NOTHING	2455	100%	1	0	WCDT	2455	100%	1	0	-	-	$ -
CLASS 114	Class	4L4T8-LP	2455	100%	12	98	2L4T8-SP-24RFL-OS	1719	75%	12	54	0.690	1,773	$ 142.91
CLASS 114	Class	NOTHING	2455	100%	1	0	WCDT	2455	100%	1	0	-	-	$ -
CLASS 115	Class	4L4T8-LP	2455	100%	12	98	2L4T8-SP-24RFL-OS	1719	75%	12	54	0.690	1,773	$ 142.91
CLASS 115	Class	NOTHING	2455	100%	1	0	WCDT	2455	100%	1	0	-	-	$ -
CLASS 110	Class	4L4T8-LP	2455	100%	10	98	4L4T8-LP-NR-OS	1719	75%	10	98	0.245	721	$ 56.19
CLASS 110	Class	2L4T8-SP	2455	100%	2	58	2L4T8-LP-NR-OS	1719	75%	2	51	0.040	109	$ 8.65
CLASS 110	Class	NOTHING	2455	100%	1	0	WCDT	2455	100%	1	0	-	-	$ -
110 SUPPLY	Supply	4L4T8-LP	2271	40%	3	98	2L4T8-SP-24RFL	2271	40%	3	54	0.053	300	$ 20.69
RESOURCE 111	Class	4L4T8-LP	2455	100%	8	98	2L4T8-SP-24RFL-OS	1719	75%	8	54	0.460	1,182	$ 95.28
RESOURCE 111	Class	NOTHING	2455	100%	2	0	CIR	2455	100%	2	0	-	-	$ -
RESOURCE OFFICE	Offices, Private	4L4T8-LP	2271	50%	1	98	2L4T8-SP-24RFL-OS	1590	38%	1	54	0.029	137	$ 9.69
RESOURCE OFFICE	Offices, Private	NOTHING	2271	50%	1	0	WSIR	2271	50%	1	0	-	-	$ -
RESOURCE SUPPLY	Supply	4L4T8-LP	2271	40%	1	98	2L4T8-SP-24RFL-OS	1590	30%	1	54	0.023	137	$ 9.37
RESOURCE SUPPLY	Supply	NOTHING	2271	40%	1	0	WSIR	2271	40%	1	0	-	-	$ -
RESOURCE CLASS	Class	4L4T8-LP	2455	100%	1	98	2L4T8-SP-24RFL-OS	1719	75%	1	54	0.058	148	$ 11.91
RESOURCE CLASS	Class	NOTHING	2455	100%	1	0	WSIR	1719	100%	1	0	-	-	$ -
CUSTODIAL OFFICE	Offices, Private	1L8T8-SP	2271	50%	1	70	1L8T8-SP-NR-OS	1590	38%	1	70	0.009	48	$ 3.31
CUSTODIAL OFFICE	Offices, Private	NOTHING	2271	50%	1	0	WSIR	2271	50%	1	0	-	-	$ -
CLASS 106	Class	4L4T8-LP	2455	100%	12	98	2L4T8-SP-24RFL-OS	1719	75%	12	54	0.690	1,773	$ 142.91
CLASS 106	Class	NOTHING	2455	100%	1	0	WCDT	2455	100%	1	0	-	-	$ -
CLASS 107	Class	4L4T8-LP	2455	100%	12	98	2L4T8-SP-24RFL-OS	1719	75%	12	54	0.690	1,773	$ 142.91
CLASS 107	Class	NOTHING	2455	100%	1	0	WCDT	2455	100%	1	0	-	-	$ -
CLASS 108	Class	4L4T8-LP	2455	100%	12	98	2L4T8-SP-24RFL-OS	1719	75%	12	54	0.690	1,773	$ 142.91
CLASS 108	Class	NOTHING	2455	100%	1	0	WCDT	2455	100%	1	0	-	-	$ -
BOYS RESTROOM	Halls Middle & Elem	2L4T8-LP	3646	100%	2	51	REMOVE	3646	100%	2	0	0.102	372	$ 27.65
BOYS RESTROOM	Halls Middle & Elem	NOTHING	3646	100%	1	0	N2L4T8-SP-8'WR	3646	100%	1	54	(0.054)	(197)	$ (14.64)
GIRLS RESTROOM	Halls Middle & Elem	2L4T8-LP	3646	100%	1	51	REMOVE	3646	100%	1	0	0.051	186	$ 13.82
GIRLS RESTROOM	Halls Middle & Elem	NOTHING	3646	100%	1	0	N1L4T8-HP-4'WR	3646	100%	1	38	(0.038)	(139)	$ (10.30)
KINDERGARTEN 109	Class	4L4T8-LP	2455	100%	14	98	2L4T8-SP-24RFL-OS	1719	75%	14	54	0.805	2,069	$ 166.73

BUILDING:	Fraser Valley Elementary	
LIGHTING CONTRACTOR:	RetroTech Systems	
ELECTRIC CONSUMPTION RATE:	$0.0594	per kWh
ELECTRIC DEMAND RATE:	$4.5349	per kW
HEATING FUEL RATE:	$8.6421	per MMBtu

ECM 5.1: Lighting System Upgrades

		PRE-RETROFIT					POST-RETROFIT ("AS-BUILT")							
AREA	USAGE TYPE	EXISTING FIXTURE DESCRIPTION	ANNUAL HOURS	Demand Div Factor	QTY	WATTS EACH*	RETROFIT DESCRIPTION	ANNUAL HOURS	Demand Div Factor	QTY	WATTS EACH**	TOTAL KW SAVED	KWH SAVED PER YR	ANNUAL MONETARY SAVINGS
KINDERGARTEN 109	Class	NOTHING	2455	100%	1	0	WCDT	2455	100%	1	0	-	-	$ -
RRS	Private RR	2L100IN	2250	10%	2	200	N2L2T8-SP-2'WL	2250	10%	2	32	0.034	756	$ 46.75
CUSTODIAL	Custodial	1L4T8-SP	2250	30%	1	32	NO RETRO	2250	30%	1	32	-	-	$ -
MULTI PURPOSE ROOM	Gym	1L400HID	2523	100%	12	458	N6L4T8-HP-LNS-WG-OS	1766	75%	12	222	3.498	9,162	$ 734.77
MULTI PURPOSE ROOM	Gym	2L8T8-SP	2523	100%	6	110	REMOVE	2523	100%	6	0	0.660	1,665	$ 134.87
MULTI PURPOSE ROOM	Gym	NOTHING	2523	100%	2	0	WCIR	2523	100%	2	0	-	-	$ -
KITCHEN	Kitchen	2L4T8-LP	800	100%	10	51	NO RETRO	800	100%	10	51	-	-	$ -
TABLE STORAGE	Storage	2L8T8-SP	2250	20%	2	110	2L8T8-SP-NR-OS	1575	15%	2	110	0.011	149	$ 9.42
TABLE STORAGE	Storage	NOTHING	2250	20%	1	0	WSIR	1575	20%	1	0	-	-	$ -
MECH / MAINT	Mechanical	2L8T8-SP	2250	10%	2	110	2L8T8-SP-NR-OS	1575	8%	2	110	0.006	149	$ 9.12
MECH / MAINT	Mechanical	NOTHING	2250	10%	1	0	WSIR	2250	10%	1	0	-	-	$ -
GYM STORAGE	Storage	2L8T8-SP	2250	20%	2	110	2L8T8-SP-NR-OS	1575	15%	2	110	0.011	149	$ 9.42
GYM STORAGE	Storage	NOTHING	2250	20%	1	0	WSIR	2250	20%	1	0	-	-	$ -
STAGE / MUSIC CLASS	Class	4L4T8-LP	2455	100%	13	98	2L4T8-SP-24RFL-OS	1719	75%	13	54	0.748	1,921	$ 154.82
STAGE / MUSIC CLASS	Class	NOTHING	2455	100%	1	0	WCIR	2455	100%	1	0	-	-	$ -
STAGE CORRIDOR	Halls Middle & Elem	4L4T8-SP	3646	100%	3	112	2L4T8-SP-24RFL	3646	100%	3	54	0.174	634	$ 47.17
MUSIC 195	Class	3L4T8-SP-OS	2365	100%	16	82	NO RETRO	2365	100%	16	82	-	-	$ -
MUSIC 195	Class	3L2T8-SP-OS	2365	100%	2	45	NO RETRO	2365	100%	2	45	-	-	$ -
MUSIC 195	EM/Night	LED EXIT	8766	100%	2	3	NO RETRO	8766	100%	2	3	-	-	$ -
BOYS RESTROOM	Halls Middle & Elem	2L4T8-LP	3646	100%	2	51	REMOVE	3646	100%	2	0	0.102	372	$ 27.65
BOYS RESTROOM	Halls Middle & Elem	NOTHING	3646	100%	1	0	N2L4T8-SP-8'WR	3646	100%	1	54	(0.054)	(197)	$ (14.64)
GIRLS RESTROOM	Halls Middle & Elem	2L4T8-LP	3646	100%	1	51	REMOVE	3646	100%	1	0	0.051	186	$ 13.82
GIRLS RESTROOM	Halls Middle & Elem	NOTHING	3646	100%	1	0	N1L4T8-HP-4'WR	3646	100%	1	38	(0.038)	(139)	$ (10.30)
CLASS 102	Class	3L4T8-SP-OS	2365	100%	12	82	NO RETRO	2365	100%	12	82	-	-	$ -
CLASS 103	Class	3L4T8-SP-OS	2365	100%	12	82	NO RETRO	2365	100%	12	82	-	-	$ -
CLASS 104	Class	3L4T8-SP-OS	2365	100%	12	82	NO RETRO	2365	100%	12	82	-	-	$ -
CLASS 105	Class	3L4T8-SP-OS	2365	100%	12	82	NO RETRO	2365	100%	12	82	-	-	$ -
CLASS 120	Class	3L4T8-SP-OS	2365	100%	12	82	NO RETRO	2365	100%	12	82	-	-	$ -
WORK ROOM	Offices, Private	3L4T8-SP	2271	50%	3	85	2L4T8-SP-24RFL	2271	50%	3	54	0.047	211	$ 15.08
WORK ROOM	Offices, Private	NOTHING	2271	50%	1	0	WSIR	2271	50%	1	0	-	-	$ -
CLASS 101	Class	3L4T8-SP-OS	2365	100%	12	82	NO RETRO	2365	100%	12	82	-	-	$ -
NEW GYM	Gym	1L250HID	2523	100%	16	295	N6L4T8-HP-LNS-WG-OS	1766	100%	16	222	1.168	5,635	$ 398.43
NEW GYM	Gym	NOTHING	2523	100%	2	0	WCIR	2523	100%	2	0	-	-	$ -
NEW GYM	EM/Night	LED EXIT	8766	100%	3	3	NO RETRO	8766	100%	3	3	-	-	$ -
GYM STORAGE	Storage	2L4T8-SP	2250	20%	4	58	2L4T8-SP-NR-OS	1575	15%	4	58	0.012	157	$ 9.94
GYM STORAGE	Storage	NOTHING	2250	20%	1	0	WSIR	2250	20%	1	0	-	-	$ -
WATER RISER	Mechanical	2L4T8-SP	2250	10%	1	58	2L4T8-SP-NR-OS	1575	8%	1	58	0.001	39	$ 2.41
WATER RISER	Mechanical	NOTHING	2250	10%	1	0	WSIR	2250	10%	1	0	-	-	$ -
SHOWER	Storage	2L4T8-SP	2250	20%	1	58	NO RETRO	2250	20%	1	58	-	-	$ -
COACH OFFICE	Offices, Private	3L4T8-SP	2271	50%	3	85	2L4T8-SP-24RFL	2271	50%	3	54	0.047	211	$ 15.08
COACH OFFICE	Offices, Private	NOTHING	2271	50%	1	0	WSIR	2271	50%	1	0	-	-	$ -
GIRLS RESTROOM	Halls Middle & Elem	3L4T8-SP	3646	100%	2	85	2L4T8-SP-24RFL	3646	100%	2	54	0.062	226	$ 16.81
GIRLS RESTROOM	Halls Middle & Elem	2L4T8-SP	3646	100%	3	58	NO RETRO	3646	100%	3	58	-	-	$ -
BOYS RESTROOM	Halls Middle & Elem	3L4T8-SP	3646	100%	2	85	2L4T8-SP-24RFL	3646	100%	2	54	0.062	226	$ 16.81
BOYS RESTROOM	Halls Middle & Elem	2L4T8-SP	3646	100%	3	58	NO RETRO	3646	100%	3	58	-	-	$ -
CUSTODIAL	Custodial	2L4T8-SP	2250	30%	1	58	2L4T8-SP-NR-OS	1575	23%	1	58	0.004	39	$ 2.56
CUSTODIAL	Custodial	NOTHING	2250	30%	1	0	WSIR	2250	30%	1	0	-	-	$ -
MEDIA CENTER	EM/Night	4L4T8-SP-EM	8766	100%	6	112	4L4T8-SP-NR-ADDSW	1864	100%	6	112	-	4,638	$ 275.61
MEDIA CENTER	EM/Night	2L4T8-SP-EM	8766	100%	3	58	2L4T8-SP-NR-ADDSW	1864	100%	3	58	-	1,201	$ 71.36
MEDIA CENTER	EM/Night	2L4T8-SP-EM	8766	100%	3	58	2L4T8-SP-PCDIM-ADDSW	932	50%	3	58	0.087	1,363	$ 85.73
MEDIA CENTER	Library	4L4T8-SP	2000	90%	4	112	NO RETRO	2000	90%	4	112	-	-	$ -
MEDIA CENTER	Library	2L4T8-SP	2000	90%	2	58	NO RETRO	2000	90%	2	58	-	-	$ -
MEDIA CENTER	Library	2L4T8-SP	2000	90%	2	58	2L4T8-SP-PCDIM	1000	45%	2	58	0.052	116	$ 9.73
MEDIA CENTER	Library	1L32CF	2000	90%	11	32	1L32CF-NR-PC	1000	45%	11	32	0.158	352	$ 29.54
MEDIA CENTER	Library	1L32CF	2000	90%	4	32	NO RETRO	2000	90%	4	32	-	-	$ -
MEDIA CENTER	Library	NOTHING	2000	90%	1	0	PHOTOCELL	2000	90%	1	0	-	-	$ -
MEDIA CENTER	Library	2LF40-BIAX	2000	90%	14	71	NO RETRO	2000	90%	14	71	-	-	$ -
MEDIA CENTER	EM/Night	LED EXIT	8766	100%	1	3	NO RETRO	8766	100%	1	3	-	-	$ -
OFFICE / WORK ROOM	Offices, Private	3L4T8-SP	2271	50%	4	85	2L4T8-SP-24RFL	2271	50%	4	54	0.062	282	$ 20.11

BUILDING:	Fraser Valley Elementary	
LIGHTING CONTRACTOR:	RetroTech Systems	
ELECTRIC CONSUMPTION RATE:	$0.0594	per kWh
ELECTRIC DEMAND RATE:	$4.5349	per kW
HEATING FUEL RATE:	$8.6421	per MMBtu

ECM 5.1: Lighting System Upgrades

		PRE-RETROFIT					POST-RETROFIT ("AS-BUILT")							
AREA	USAGE TYPE	EXISTING FIXTURE DESCRIPTION	ANNUAL HOURS	Demand Div Factor	QTY	WATTS EACH*	RETROFIT DESCRIPTION	ANNUAL HOURS	Demand Div Factor	QTY	WATTS EACH**	TOTAL KW SAVED	KWH SAVED PER YR	ANNUAL MONETARY SAVINGS
OFFICE / WORK ROOM	Offices, Private	NOTHING	2271	50%	1	0	WSIR	2271	50%	1	0	-	-	$ -
READING NOOK	Library	3L4T8-SP	2000	90%	4	85	2L4T8-SP-24RFL	2000	90%	4	54	0.112	248	$ 20.81
READING NOOK	Library	NOTHING	2000	90%	1	0	WSIR	2000	90%	1	0	-	-	$ -
COMPUTER LAB	Class	3L4T8-SP-OS	2455	100%	12	82	NO RETRO	2455	100%	12	82	-	-	$ -
TECH OFFICE	Offices, Private	3L4T8-SP	2271	50%	1	85	2L4T8-SP-24RFL	2271	50%	1	54	0.016	70	$ 5.03
TECH OFFICE	Offices, Private	NOTHING	2271	50%	1	0	WSIR	2271	50%	1	0	-	-	$ -
PENTHOUSE MECH	Mechanical	2L4T8-SP	2250	10%	8	58	NO RETRO	2250	10%	8	58	-	-	$ -
ELECTRICAL ROOM	Mechanical	2L4T8-SP	2250	10%	1	58	NO RETRO	2250	10%	1	58	-	-	$ -
STORAGE	Storage	2L4T8-SP	2250	20%	1	58	NO RETRO	2250	20%	1	58	-	-	$ -
COMMONS ATRIUM	Halls Middle & Elem	1L400HID	3646	100%	4	458	N6L4T8-HP-DEC	3646	100%	4	222	0.944	3,442	$ 255.89
COMMONS ATRIUM	Halls Middle & Elem	1L400HID	3646	100%	2	458	N6L4T8-HP-DEC-PC	1823	50%	2	222	0.694	2,530	$ 188.12
COMMONS ATRIUM	Halls Middle & Elem	NOTHING	3646	100%	1	0	PHOTOCELL	3646	100%	1	0	-	-	$ -
COMMONS ATRIUM	Halls Middle & Elem	1L32CF	3646	100%	3	32	1L32CF-NR-PC	1823	50%	3	32	0.048	175	$ 13.01
COMMONS ATRIUM	Halls Middle & Elem	NOTHING	3646	100%	1	0	PHOTOCELL	3646	100%	1	0	-	-	$ -
COMMONS ATRIUM	Halls Middle & Elem	1L32CF	3646	100%	3	32	NO RETRO	3646	100%	3	32	-	-	$ -
COMMONS ATRIUM	Halls Middle & Elem	2L26CF	3646	100%	6	54	NO RETRO	3646	100%	6	54	-	-	$ -
COMMONS ATRIUM	EM/Night	LED EXIT	8766	100%	2	3	NO RETRO	8766	100%	2	3	-	-	$ -
HALL SOUTH	Halls Middle & Elem	2L4T8-SP	3646	100%	20	58	NO RETRO	3646	100%	20	58	-	-	$ -
HALL SOUTH	Halls Middle & Elem	1L32CF	3646	100%	7	32	NO RETRO	3646	100%	7	32	-	-	$ -
HALL SOUTH	EM/Night	LED EXIT	8766	100%	2	3	NO RETRO	8766	100%	2	3	-	-	$ -
PE HALL	Halls Middle & Elem	2L4T8-SP	3646	100%	5	58	NO RETRO	3646	100%	5	58	-	-	$ -
PE HALL	Halls Middle & Elem	1L32CF	3646	100%	6	32	1L32CF-NR-PC	1823	50%	6	32	0.096	350	$ 26.02
PE HALL	Halls Middle & Elem	NOTHING	3646	100%	1	0	PHOTOCELL	3646	100%	1	0	-	-	$ -
PE HALL	EM/Night	LED EXIT	8766	100%	1	3	NO RETRO	8766	100%	1	3	-	-	$ -
CENTER HALLS	Halls Middle & Elem	4L4T8-LP	3646	100%	26	98	2L4T8-SP-24RFL	3646	100%	26	54	1.144	4,171	$ 310.11
CENTER HALLS	EM/Night	LED EXIT	8766	100%	7	3	NO RETRO	8766	100%	7	3	-	-	$ -
NORTH HALLS	Halls Middle & Elem	3L4T8-SP	3646	100%	8	85	2L4T8-SP-24RFL	3646	100%	8	54	0.248	904	$ 67.23
NORTH HALLS	Halls Middle & Elem	2L26CF	3646	100%	12	54	NO RETRO	3646	100%	12	54	-	-	$ -
NORTH HALLS	EM/Night	LED EXIT	8766	100%	1	3	NO RETRO	8766	100%	1	3	-	-	$ -
MODULAR CLASS / STOR	Storage	4L4T8-SP	2250	20%	12	112	NO RETRO	2250	20%	12	112	-	-	$ -
TOTALS					676					676		16.721	59,819	$ 4,464.56

* Based on ANSI wattages - to be verified by contractor

** Based on manufacturer's wattages - to be verified by contractor

BUILDING: Granby Elementary School
LIGHTING CONTRACTOR: RetroTech Systems
ELECTRIC CONSUMPTION RATE: $0.0688 per kWh
ELECTRIC DEMAND RATE: $4.5349 per kW
HEATING FUEL RATE: $8.6421 per MMBtu

ECM 5.1: Lighting System Upgrades

		PRE-RETROFIT					POST-RETROFIT ("AS-BUILT")							
AREA	USAGE TYPE	EXISTING FIXTURE DESCRIPTION	ANNUAL HOURS	Demand Div Factor	QTY	WATTS EACH*	RETROFIT DESCRIPTION	ANNUAL HOURS	Demand Div Factor	QTY	WATTS EACH**	TOTAL KW SAVED	KWH SAVED PER YR	ANNUAL MONETARY SAVINGS
CLASS 130	Class	3L4T8-LP-DUAL	2455	100%	13	80	3L4T8-LP-DUAL-NR-OS	1719	75%	13	80	0.260	765	$ 66.81
CLASS 130	Class	NOTHING	2455	100%	1	0	WCDT	2455	100%	1	0	-	-	$ -
RRS	Private RR	2L2T12	2250	10%	2	49	2L2T8-LP	2250	10%	2	28	0.004	95	$ 6.73
CLASS 129	Class	3L4T8-LP-DUAL	2455	100%	13	80	3L4T8-LP-DUAL-NR-OS	1719	75%	13	80	0.260	765	$ 66.81
CLASS 129	Class	NOTHING	2455	100%	1	0	WCDT	2455	100%	1	0	-	-	$ -
RRS	Private RR	2L2T12	2250	10%	2	49	2L2T8-LP	2250	10%	2	28	0.004	95	$ 6.73
COMPUTER LAB 128	Class	3L4T8-LP-DUAL	2455	100%	10	80	3L4T8-LP-DUAL-NR-OS	1719	75%	10	80	0.200	589	$ 51.40
COMPUTER LAB 129	Class	NOTHING	2455	100%	1	0	WCDT	2455	100%	1	0	-	-	$ -
CLASS 139	Class	3L4T8-LP-DUAL	2455	100%	13	80	3L4T8-LP-DUAL-NR-OS	1719	75%	13	80	0.260	765	$ 66.81
CLASS 139	Class	NOTHING	2455	100%	1	0	WCDT	2455	100%	1	0	-	-	$ -
RRS	Private RR	2L2T12	2250	10%	2	49	2L2T8-LP	2250	10%	2	28	0.004	95	$ 6.73
CLASS 138	Class	3L4T8-LP-DUAL	2455	100%	13	80	3L4T8-LP-DUAL-NR-OS	1719	75%	13	80	0.260	765	$ 66.81
CLASS 138	Class	NOTHING	2455	100%	1	0	WCDT	2455	100%	1	0	-	-	$ -
RRS	Private RR	2L2T12	2250	10%	2	49	2L2T8-LP	2250	10%	2	28	0.004	95	$ 6.73
CLASS 137	Class	3L4T8-LP-DUAL	2455	100%	15	80	3L4T8-LP-DUAL-NR-OS	1719	75%	15	80	0.300	883	$ 77.09
CLASS 137	Class	NOTHING	2455	100%	1	0	WCDT	2455	100%	1	0	-	-	$ -
CLASS 136	Class	3L4T8-LP-DUAL	2455	100%	15	80	3L4T8-LP-DUAL-NR-OS	1719	75%	15	80	0.300	883	$ 77.09
CLASS 136	Class	NOTHING	2455	100%	1	0	WCDT	2455	100%	1	0	-	-	$ -
MEDIA 124	Library	3L4T8-LP	2000	90%	8	76	3L4T8-LP-NR-OS	1400	68%	8	76	0.137	365	$ 32.54
MEDIA 124	Library	NOTHING	2000	90%	1	0	WCDT	2000	90%	1	0	-	-	$ -
MEDIA 124	Library	3L4T8-LP	2000	90%	36	76	3L4T8-LP-NR-OS	1400	68%	36	76	0.616	1,642	$ 146.45
MEDIA 124	Library	NOTHING	2000	90%	2	0	WCDT	2000	90%	2	0	-	-	$ -
MEDIA 124	EM/Night	LED EXIT	8766	100%	1	3	NO RETRO	8766	100%	1	3	-	-	$ -
MEDIA SUPPLY 123	Supply	3L4T8-LP-DUAL	2000	40%	9	80	3L4T8-LP-DUAL-NR-OS	1400	30%	9	80	0.072	432	$ 33.64
MEDIA SUPPLY 123	Supply	NOTHING	2000	40%	1	0	WCDT	2000	40%	1	0	-	-	$ -
MEDIA OFFICE 125	Offices, Private	3L4T8-LP-DUAL	2271	50%	4	80	3L4T8-LP-DUAL-NR-OS	1590	38%	4	80	0.040	218	$ 17.17
MEDIA OFFICE 125	Offices, Private	NOTHING	2271	50%	1	0	WCDT	2271	50%	1	0	-	-	$ -
WORK ROOM 126	Offices, Private	3L4T8-LP-DUAL	2271	50%	3	80	3L4T8-LP-DUAL-NR-OS	1590	38%	3	80	0.030	163	$ 12.88
WORK ROOM 126	Offices, Private	NOTHING	2271	50%	1	0	WSIR-2P	2271	50%	1	0	-	-	$ -
STORAGE 127	Storage	4L4T8-LP	2250	20%	1	98	2L4T8-SP-24RFL-OS	1575	15%	1	54	0.012	135	$ 9.95
STORAGE 127	Storage	NOTHING	2250	20%	1	0	WSIR	2250	20%	1	0	-	-	$ -
RRS	Common RR	2L4T8-LP	3646	100%	8	51	NO RETRO	3646	100%	8	51	-	-	$ -
RESOURCE 117	Class	3L4T8-LP-DUAL	2455	100%	7	80	3L4T8-LP-DUAL-NR-OS	1719	75%	7	80	0.140	412	$ 35.98
RESOURCE 117	Class	NOTHING	2455	100%	1	0	WCDT	2455	100%	1	0	-	-	$ -
SUPPLY 118	Supply	3L4T8-LP	2271	40%	2	76	3L4T8-LP-NR-OS	1590	30%	2	76	0.015	104	$ 7.95
SUPPLY 118	Supply	NOTHING	2271	40%	1	0	WSIR	2271	40%	1	0	-	-	$ -
CLASS 119	Class	3L4T8-LP	2455	100%	2	76	3L4T8-LP-NR-OS	1719	75%	2	76	0.038	112	$ 9.77
CLASS 119	Class	NOTHING	2455	100%	1	0	WSIR	2455	100%	1	0	-	-	$ -
OFFICE 120	Offices, Private	3L4T8-LP	2271	50%	2	76	3L4T8-LP-NR-OS	1590	38%	2	76	0.019	104	$ 8.16
OFFICE 120	Offices, Private	NOTHING	2271	50%	1	0	WSIR	2271	50%	1	0	-	-	$ -
OFFICE 116	Offices, Private	3L4T8-LP	2271	50%	2	76	3L4T8-LP-NR-OS	1590	38%	2	76	0.019	104	$ 8.16
OFFICE 116	Offices, Private	NOTHING	2271	50%	1	0	WSIR	2271	50%	1	0	-	-	$ -
OFFICE 115	Offices, Private	3L4T8-LP	2271	50%	2	76	3L4T8-LP-NR-OS	1590	38%	2	76	0.019	104	$ 8.16
OFFICE 115	Offices, Private	NOTHING	2271	50%	1	0	WSIR	2271	50%	1	0	-	-	$ -
OFFICE 114	Offices, Private	3L4T8-LP	2271	50%	2	76	3L4T8-LP-NR-OS	1590	38%	2	76	0.019	104	$ 8.16
OFFICE 114	Offices, Private	NOTHING	2271	50%	1	0	WSIR	2271	50%	1	0	-	-	$ -
WOMENS STAFF RR 111	Private RR	2L4T8-LP	2250	10%	1	51	2L4T8-LP-NR-OS	1575	8%	1	51	0.001	34	$ 2.44
WOMENS STAFF RR 111	Private RR	NOTHING	2250	10%	1	0	WSIR	2250	10%	1	0	-	-	$ -
MENS STAFF RR 110	Private RR	2L4T8-LP	2250	10%	1	51	2L4T8-LP-NR-OS	1575	8%	1	51	0.001	34	$ 2.44
MENS STAFF RR 110	Private RR	NOTHING	2250	10%	1	0	WSIR	2250	10%	1	0	-	-	$ -
LAUNDRY 105	Custodial	2L4T8-LP	2250	30%	2	51	2L4T8-LP-NR-OS	1575	23%	2	51	0.008	69	$ 5.15
LAUNDRY 105	Custodial	NOTHING	2250	30%	1	0	WSIR	2250	30%	1	0	-	-	$ -
ELECTRIC ROOM	Mechanical	2L4T8-LP	2250	10%	1	51	NO RETRO	2250	10%	1	51	-	-	$ -
CUSTODIAL 107	Custodial	2L4T8-LP	2250	30%	1	51	2L4T8-LP-NR-OS	1575	23%	1	51	0.004	34	$ 2.58
CUSTODIAL 107	Custodial	NOTHING	2250	30%	1	0	WSIR	2250	30%	1	0	-	-	$ -
CLASS 101	Class	3L4T8-LP-DUAL	2455	100%	15	80	3L4T8-LP-DUAL-NR-OS	1719	75%	15	80	0.300	883	$ 77.09
CLASS 101	Class	NOTHING	2455	100%	1	0	WCDT	2455	100%	1	0	-	-	$ -
CLASS 102	Class	3L4T8-LP-DUAL	2455	100%	15	80	3L4T8-LP-DUAL-NR-OS	1719	75%	15	80	0.300	883	$ 77.09
CLASS 102	Class	NOTHING	2455	100%	1	0	WCDT	2455	100%	1	0	-	-	$ -

BUILDING: Granby Elementary School
LIGHTING CONTRACTOR: RetroTech Systems
ELECTRIC CONSUMPTION RATE: $0.0688 per kWh
ELECTRIC DEMAND RATE: $4.5349 per kW
HEATING FUEL RATE: $8.6421 per MMBtu

ECM 5.1: Lighting System Upgrades

		PRE-RETROFIT					POST-RETROFIT ("AS-BUILT")							
AREA	USAGE TYPE	EXISTING FIXTURE DESCRIPTION	ANNUAL HOURS	Demand Div Factor	QTY	WATTS EACH*	RETROFIT DESCRIPTION	ANNUAL HOURS	Demand Div Factor	QTY	WATTS EACH**	TOTAL KW SAVED	KWH SAVED PER YR	ANNUAL MONETARY SAVINGS
CLASS 103	Class	3L4T8-LP-DUAL	2455	100%	15	80	3L4T8-LP-DUAL-NR-OS	1719	75%	15	80	0.300	883	$ 77.09
CLASS 103	Class	NOTHING	2455	100%	1	0	WCDT	2455	100%	1	0	-	-	$ -
CLASS 104	Class	3L4T8-LP-DUAL	2455	100%	15	80	3L4T8-LP-DUAL-NR-OS	1719	75%	15	80	0.300	883	$ 77.09
CLASS 104	Class	NOTHING	2455	100%	1	0	WCDT	2455	100%	1	0	-	-	$ -
TITLE 1	Class	3L4T8-SP	2455	100%	4	85	3L4T8-SP-NR-OS	1719	75%	4	85	0.085	250	$ 21.84
TITLE 1	Class	NOTHING	2455	100%	1	0	WCDT	2455	100%	1	0	-	-	$ -
3RD GRADE	Class	3L4T8-SP	2455	100%	9	85	3L4T8-SP-NR-OS	1719	75%	9	85	0.191	563	$ 49.15
TITLE 1	Class	3L4T8-SP	2455	100%	4	85	3L4T8-SP-NR-OS	1719	75%	4	85	0.085	250	$ 21.84
TITLE 1	Class	NOTHING	2455	100%	1	0	WCDT	2455	100%	1	0	-	-	$ -
3RD GRADE	Class	3L4T8-SP	2455	100%	9	85	3L4T8-SP-NR-OS	1719	75%	9	85	0.191	563	$ 49.15
3RD GRADE	Class	NOTHING	2455	100%	1	0	WCDT	2455	100%	1	0	-	-	$ -
MAIN OFFICE	Common Admin	3L4T8-SP	2271	100%	4	85	NO RETRO	2271	100%	4	85	-	-	$ -
MAIN OFFICE	EM/Night	LED EXIT	8766	100%	4	3	NO RETRO	8766	100%	4	3	-	-	$ -
OFFICE CORRIDORS	Common Admin	4L4T8-LP	3646	100%	4	98	2L4T8-SP-24RFL	3646	100%	4	54	0.176	642	$ 53.73
OFFICE CORRIDORS	Common Admin	3L4T8-SP	3646	100%	3	85	NO RETRO	3646	100%	3	85	-	-	$ -
NURSE	Common Admin	3L4T8-SP	3646	100%	2	85	NO RETRO	3646	100%	2	85	-	-	$ -
NURSE RR	Private RR	3L4T8-SP	2250	10%	1	85	NO RETRO	2250	10%	1	85	-	-	$ -
PRINCIPAL OFFICE	Offices, Private	4L4T8-LP	2271	50%	2	98	4L4T8-LP-NR-OS	1590	38%	2	98	0.025	133	$ 10.52
PRINCIPAL OFFICE	Offices, Private	NOTHING	2271	50%	1	0	WSDT	2271	50%	1	0	-	-	$ -
CONFERENCE ROOM	Conference	4L4T8-LP	2271	40%	4	98	4L4T8-LP-NR-OS	1590	30%	4	98	0.039	267	$ 20.50
CONFERENCE ROOM	Conference	NOTHING	2271	40%	1	0	WSIR	2271	40%	1	0	-	-	$ -
RECORDS	Common Admin	1L8T8-SP	2271	100%	1	70	1L8T8-SP-NR-OS	1590	75%	1	70	0.018	48	$ 4.23
RECORDS	Common Admin	NOTHING	2271	100%	1	0	WSIR	2271	100%	1	0	-	-	$ -
OFFICE	Offices, Private	4L4T8-LP	2271	50%	2	98	2L4T8-SP-24RFL-OS	1590	38%	2	54	0.058	273	$ 21.94
OFFICE	Offices, Private	NOTHING	2271	50%	1	0	WSDT	2271	50%	1	0	-	-	$ -
OFFICE	Offices, Private	4L4T8-LP	2271	50%	2	98	2L4T8-SP-24RFL-OS	1590	38%	2	54	0.058	273	$ 21.94
RR	Private RR	2L100IN	2271	10%	1	200	N2L2T8-SP-2'WL	2271	10%	1	32	0.017	382	$ 27.17
RRS	Private RR	2L100IN	2271	10%	2	200	N2L2T8-SP-2'WL	2271	10%	2	32	0.034	763	$ 54.33
MAINT OFFICE	Offices, Private	2L8T8-SP	2271	50%	1	110	NO RETRO	2271	50%	1	110	-	-	$ -
MAIL ROOM	Offices, Private	1L8T8-SP	2271	50%	1	70	NO RETRO	2271	50%	1	70	-	-	$ -
WORK ROOM	Offices, Private	4L4T8-LP	2271	50%	8	98	2L4T8-SP-24RFL-OS	1590	38%	8	54	0.230	1,094	$ 87.76
WORK ROOM	Offices, Private	NOTHING	2271	50%	1	0	WCIR	2271	50%	1	0	-	-	$ -
COUNSELLING OFFICE	Offices, Private	4L4T8-LP	2271	50%	2	98	2L4T8-SP-24RFL-OS	1590	38%	2	54	0.058	273	$ 21.94
COUNSELLING OFFICE	Offices, Private	NOTHING	2271	50%	1	0	WSIR	2271	50%	1	0	-	-	$ -
COUNSELLING OFFICE	Offices, Private	4L4T8-LP	2271	50%	2	98	2L4T8-SP-24RFL-OS	1590	38%	2	54	0.058	273	$ 21.94
COUNSELLING OFFICE	Offices, Private	NOTHING	2271	50%	1	0	WSIR	2271	50%	1	0	-	-	$ -
MECHANICAL	Mechanical	1L8T8-SP	2271	10%	2	70	NO RETRO	2271	10%	2	70	-	-	$ -
CAFETERIA	Halls Middle & Elem	2L4T8-LP	2250	100%	34	51	2L4T8-LP-NR-OS	1575	75%	34	51	0.434	1,170	$ 104.12
CAFETERIA	Halls Middle & Elem	NOTHING	2250	100%	2	0	WCIR	2250	100%	2	0	-	-	$ -
CAFETERIA	EM/Night	LED EXIT	8766	100%	1	3	NO RETRO	8766	100%	1	3	-	-	$ -
KITCHEN	Kitchen	2L4T8-LP	800	100%	12	51	NO RETRO	800	100%	12	51	-	-	$ -
KIT LOCKER	Kitchen	1L4T8-SP	800	100%	1	32	NO RETRO	800	100%	1	32	-	-	$ -
KITCHEN RR	Private RR	2L100IN	800	10%	1	200	N2L2T8-SP-2'WL	800	10%	1	32	0.017	134	$ 10.16
STOR ROOM	Storage	1L8T8-SP	800	20%	1	70	NO RETRO	800	20%	1	70	-	-	$ -
RRS	Common RR	2L4T8-LP	3646	100%	5	51	REMOVE	3646	100%	5	0	0.255	930	$ 77.85
RRS	Common RR	NOTHING	3646	100%	2	0	N2L4T8-SP-8'WR	3646	100%	2	54	(0.108)	(394)	$ (32.97)
RRS	Common RR	NOTHING	3646	100%	1	0	N1L4T8-SP-4'WR	3646	100%	1	28	(0.028)	(102)	$ (8.55)
MUSIC	Class	4L4T8-LP	2455	100%	18	98	2L4T8-SP-24RFL-OS	1719	75%	18	54	1.035	2,660	$ 239.33
MUSIC	Class	NOTHING	2455	100%	1	0	WCDT	2455	100%	1	0	-	-	$ -
MUSIC	EM/Night	LED EXIT	8766	100%	1	3	NO RETRO	8766	100%	1	3	-	-	$ -
ART	Class	4L4T8-LP	2455	100%	14	98	4L4T8-LP-NR-OS	1719	75%	14	98	0.343	1,010	$ 88.14
ART	Class	NOTHING	2455	100%	1	0	WCDT	2455	100%	1	0	-	-	$ -
ART	Class	LED EXIT	2455	100%	1	3	NO RETRO	2455	100%	1	3	-	-	$ -
ART STORAGE	Storage	1L8T8-SP	2250	20%	1	70	1L8T8-SP-NR-OS	1575	15%	1	70	0.004	47	$ 3.44
ART STORAGE	Storage	NOTHING	2250	20%	1	0	WSIR	2250	20%	1	0	-	-	$ -
PRESCHOOL	Class	4L4T8-LP	2455	100%	15	98	2L4T8-SP-24RFL-OS	1719	75%	15	54	0.863	2,216	$ 199.44
PRESCHOOL	Class	NOTHING	2455	100%	1	0	WCDT	2455	100%	1	0	-	-	$ -
RRS	Private RR	2L100IN	2250	10%	2	200	N2L2T8-SP-2'WL	2250	10%	2	32	0.034	756	$ 53.85
GYM	Gym	1L400HID	2330	100%	24	458	N6L4T8-HP-LNS-WG-OS	1631	75%	24	222	6.996	16,921	$ 1,544.99

BUILDING: Granby Elementary School
LIGHTING CONTRACTOR: RetroTech Systems
ELECTRIC CONSUMPTION RATE: $0.0688 per kWh
ELECTRIC DEMAND RATE: $4.5349 per kW
HEATING FUEL RATE: $8.6421 per MMBtu

ECM 5.1: Lighting System Upgrades

		PRE-RETROFIT					POST-RETROFIT ("AS-BUILT")							
AREA	USAGE TYPE	EXISTING FIXTURE DESCRIPTION	ANNUAL HOURS	Demand Div Factor	QTY	WATTS EACH*	RETROFIT DESCRIPTION	ANNUAL HOURS	Demand Div Factor	QTY	WATTS EACH**	TOTAL KW SAVED	KWH SAVED PER YR	ANNUAL MONETARY SAVINGS
GYM	Gym	NOTHING	2330	100%	2	0	WCIR	2330	100%	2	0	-	-	$ -
GYM	EM/Night	LED EXIT	8766	100%	3	3	NO RETRO	8766	100%	3	3	-	-	$ -
VESTIBULE	Halls Middle & Elem	1L100IN	3646	100%	1	100	N1L13CF-CPY	3646	100%	1	14	0.086	314	$ 26.25
GYM STORAGE	Storage	2L4T8-LP	2250	20%	1	51	NO RETRO	2250	20%	1	51	-	-	$ -
EQUIP STORAGE	Storage	2L8T8-SP	2250	20%	7	110	2L8T8-SP-NR-OS	1575	15%	7	110	0.039	520	$ 37.86
EQUIP STORAGE	Storage	2L4T8-LP	2250	20%	4	51	2L4T8-LP-NR-OS	1575	15%	4	51	0.010	138	$ 10.03
EQUIP STORAGE	Storage	NOTHING	2250	20%	1	0	WCIR	2250	20%	1	0	-	-	$ -
RRS	Common RR	2L4T8-LP	3646	100%	3	51	N1L4T8-SP-4'WR	3646	100%	3	28	0.069	252	$ 21.06
WORK ROOM 125	Offices, Private	2L4T8-LP	2271	50%	2	51	2L4T8-LP-NR-OS	1590	38%	2	51	0.013	69	$ 5.47
WORK ROOM 125	Offices, Private	NOTHING	2271	50%	1	0	WSIR	2271	50%	1	0	-	-	$ -
CLASS 301	Class	3L4T8-SP-OS	2455	100%	7	82	NO RETRO	2455	100%	7	82	-	-	$ -
RR	Private RR	2L4T8-SP	2250	10%	1	58	NO RETRO	2250	10%	1	58	-	-	$ -
OFFICE	Offices, Private	3L4T8-SP	2271	50%	2	85	3L4T8-SP-NR-OS	1590	38%	2	85	0.021	116	$ 9.12
OFFICE	Offices, Private	NOTHING	2271	50%	1	0	WSIR	2271	50%	1	0	-	-	$ -
CLASS 303	Class	3L4T8-SP-OS	2455	100%	7	82	NO RETRO	2455	100%	7	82	-	-	$ -
CLASS 305	Class	3L4T8-SP-OS	2455	100%	12	82	NO RETRO	2455	100%	12	82	-	-	$ -
RR	Private RR	2L4T8-SP	2250	10%	1	58	NO RETRO	2250	10%	1	58	-	-	$ -
CLASS 307	Class	3L4T8-SP-OS	2455	100%	12	82	NO RETRO	2455	100%	12	82	-	-	$ -
RR	Private RR	2L4T8-SP	2250	10%	1	58	NO RETRO	2250	10%	1	58	-	-	$ -
CLASS 309	Class	3L4T8-SP-OS	2455	100%	11	82	NO RETRO	2455	100%	11	82	-	-	$ -
RR	Private RR	2L4T8-SP	2250	10%	1	58	NO RETRO	2250	10%	1	58	-	-	$ -
CLASS 310	Class	3L4T8-SP	2455	100%	4	85	3L4T8-SP-NR-OS	1719	75%	4	85	0.085	250	$ 21.84
RR	Private RR	NOTHING	2250	10%	1	0	WSDT	2250	10%	1	0	-	-	$ -
CLASS 308	Class	3L4T8-SP-OS	2455	100%	15	82	NO RETRO	2455	100%	15	82	-	-	$ -
RR	Private RR	2L4T8-SP	2250	10%	1	58	NO RETRO	2250	10%	1	58	-	-	$ -
CLASS 306	Class	3L4T8-SP-OS	2455	100%	12	82	NO RETRO	2455	100%	12	82	-	-	$ -
RR	Private RR	2L4T8-SP	2250	10%	1	58	NO RETRO	2250	10%	1	58	-	-	$ -
CLASS 304	Class	3L4T8-SP-OS	2455	100%	12	82	NO RETRO	2455	100%	12	82	-	-	$ -
RR	Private RR	2L4T8-SP	2250	10%	1	58	NO RETRO	2250	10%	1	58	-	-	$ -
CLASS 302	Class	3L4T8-SP-OS	2455	100%	12	82	NO RETRO	2455	100%	12	82	-	-	$ -
CLASS 302	Class	2LU6T8-SP-OS	2455	100%	3	58	NO RETRO	2455	100%	3	58	-	-	$ -
RR	Private RR	2L4T8-SP	2250	10%	1	58	NO RETRO	2250	10%	1	58	-	-	$ -
OFFICE 300	Offices, Private	3L4T8-SP	2271	50%	2	85	3L4T8-SP-NR-OS	1590	38%	2	85	0.021	116	$ 9.12
OFFICE 300	Offices, Private	NOTHING	2271	50%	1	0	WSIR	2271	50%	1	0	-	-	$ -
HALL 300	Halls Middle & Elem	3L4T8-SP	3646	100%	10	85	2L4T8-SP-24RFL	3646	100%	10	54	0.310	1,130	$ 94.64
HALL 300	Halls Middle & Elem	2L26CF	3646	100%	4	54	NO RETRO	3646	100%	4	54	-	-	$ -
HALL 300	EM/Night	LED EXIT	8766	100%	3	3	NO RETRO	8766	100%	3	3	-	-	$ -
GYM HALL	Halls Middle & Elem	2L4T8-LP	3646	100%	12	51	NO RETRO	3646	100%	12	51	-	-	$ -
GYM HALL	EM/Night	LED EXIT	8766	100%	3	3	NO RETRO	8766	100%	3	3	-	-	$ -
MUSIC HALLWAY	Halls Middle & Elem	4L4T8-LP	3646	100%	11	98	2L4T8-SP-24RFL	3646	100%	11	54	0.484	1,765	$ 147.76
MUSIC HALLWAY	EM/Night	LED EXIT	8766	100%	2	3	NO RETRO	8766	100%	2	3	-	-	$ -
MUSIC HALLWAY DISP	Halls Middle & Elem	2L4T8-LP	3646	100%	2	51	N1L4T8-SP-ST	3646	100%	2	28	0.046	168	$ 14.04
CENTER HALL	Halls Middle & Elem	2L4T8-LP	3646	100%	7	51	NO RETRO	3646	100%	7	51	-	-	$ -
CENTER HALL	EM/Night	LED EXIT	8766	100%	2	3	NO RETRO	8766	100%	2	3	-	-	$ -
HALL 100	Halls Middle & Elem	2L4T8-LP	3646	100%	19	51	NO RETRO	3646	100%	19	51	-	-	$ -
HALL 100	EM/Night	LED EXIT	8766	100%	4	3	NO RETRO	8766	100%	4	3	-	-	$ -
3RD GRADE	Class	NOTHING	2455	100%	1	0	WCDT	2455	100%	1	0	-	-	$ -
KITCHEN	EM/Night	LED EXIT	8766	100%	1	3	NO RETRO	8766	100%	1	3	-	-	$ -
TOTALS					736					736		16.593	49,731	$ 4,324.68

* Based on ANSI wattages - to be verified by contractor
** Based on manufacturer's wattages - to be verified by contractor

BUILDING:	Grand Lake Elementary	
LIGHTING CONTRACTOR:	RetroTech Systems	
ELECTRIC CONSUMPTION RATE:	$0.0803	per kWh
ELECTRIC DEMAND RATE:	$4.5349	per kW
HEATING FUEL RATE:	$8.6421	per MMBtu

ECM 5.1: Lighting System Upgrades

		PRE-RETROFIT					POST-RETROFIT ("AS-BUILT")							
AREA	USAGE TYPE	EXISTING FIXTURE DESCRIPTION	ANNUAL HOURS	Demand Div Factor	QTY	WATTS EACH*	RETROFIT DESCRIPTION	ANNUAL HOURS	Demand Div Factor	QTY	WATTS EACH**	TOTAL KW SAVED	KWH SAVED PER YR	ANNUAL MONETARY SAVINGS
MAIN OFFICE	Common Admin	4L4T8-LP	2271	100%	4	98	2L4T8-SP-24RFL	2271	100%	4	54	0.176	400	$ 41.66
NURSE	Common Admin	4L4T8-LP	2271	100%	3	98	NO RETRO	2271	100%	3	98	-	-	$ -
RESTROOM	Private RR	2L100IN	2250	10%	1	200	N2L2T8-SP-2'WL	2250	10%	1	32	0.017	378	$ 31.26
PRINCIPAL OFFICE	Private RR	4L4T8-LP	2250	10%	4	98	2L4T8-SP-24RFL-OS	1575	8%	4	54	0.023	542	$ 44.74
PRINCIPAL OFFICE	Private RR	NOTHING	2250	10%	1	0	WSIR	2250	10%	1	0	-	-	$ -
FILE ROOM	Common Admin	1L8T8-SP	2271	100%	1	70	1L8T8-SP-NR-OS	1590	75%	1	70	0.018	48	$ 4.78
FILE ROOM	Common Admin	NOTHING	2271	100%	1	0	WSIR	2271	100%	1	0	-	-	$ -
CONFERENCE ROOM	Conference	4L4T8-LP	2271	40%	4	98	4L4T8-LP-NR-OS	2271	30%	4	98	0.039	-	$ 2.13
CONFERENCE ROOM	Conference	NOTHING	2271	40%	1	0	WSIR	2271	40%	1	0	-	-	$ -
WORK ROOM	Common Admin	4L4T8-LP	2271	100%	6	98	2L4T8-SP-24RFL-OS	1590	75%	6	54	0.345	820	$ 84.61
WORK ROOM	Common Admin	NOTHING	2271	100%	1	0	WCDT	2271	100%	1	0	-	-	$ -
ART ROOM	Class	4L4T8-LP	2455	100%	12	98	NO RETRO	1864	100%	12	98	-	695	$ 55.79
ART ROOM	Class	NOTHING	2455	100%	1	0	WCDT	2455	100%	1	0	-	-	$ -
CLASS INTERMEDIATE	Class	4L4T8-LP	2455	100%	12	98	2L4T8-SP-24RFL-OS	1719	75%	12	54	0.690	1,773	$ 179.89
CLASS INTERMEDIATE	Class	NOTHING	2455	100%	1	0	WCDT	2455	100%	1	0	-	-	$ -
CLASS INTERMEDIATE	Class	4L4T8-LP	2455	100%	12	98	2L4T8-SP-24RFL-OS	1719	75%	12	54	0.690	1,773	$ 179.89
CLASS INTERMEDIATE	Class	NOTHING	2455	100%	1	0	WCDT	2455	100%	1	0	-	-	$ -
CLASS 5TH	Class	4L4T8-LP	2455	100%	12	98	2L4T8-SP-24RFL-OS	1719	75%	12	54	0.690	1,773	$ 179.89
CLASS 5TH	Class	NOTHING	2455	100%	1	0	WCDT	2455	100%	1	0	-	-	$ -
MEDIA CENTER	Library	4L4T8-LP	2000	90%	10	98	4L4T8-LP-NR-OS	1400	68%	10	98	0.221	588	$ 59.20
MEDIA CENTER	Library	2L4T8-SP	2000	90%	2	58	2L4T8-LP-NR-OS	1400	68%	2	51	0.036	89	$ 9.09
MEDIA CENTER	Library	NOTHING	2000	90%	1	0	WCDT	2000	90%	1	0	-	-	$ -
OFFICE / WORK ROOM	Offices, Private	4L4T8-LP	2271	50%	3	98	2L4T8-SP-24RFL	1590	50%	3	54	0.066	410	$ 36.51
COMPUTER LAB	Class	4L4T8-LP	2455	100%	8	98	2L4T8-SP-24RFL-OS	1719	75%	8	54	0.460	1,182	$ 119.92
COMPUTER LAB	Class	NOTHING	2455	100%	2	0	CIR	2455	100%	2	0	-	-	$ -
RESOURCE OFFICE	Offices, Private	4L4T8-LP	2271	50%	1	98	2L4T8-SP-24RFL-OS	1590	38%	1	54	0.029	137	$ 12.54
RESOURCE OFFICE	Offices, Private	NOTHING	2271	50%	1	0	WSIR	2271	50%	1	0	-	-	$ -
RESOURCE SUPPLY	Supply	4L4T8-LP	2271	40%	1	98	2L4T8-SP-24RFL-OS	1590	30%	1	54	0.023	137	$ 12.22
RESOURCE SUPPLY	Supply	NOTHING	2271	40%	1	0	WSIR	2271	40%	1	0	-	-	$ -
RESOURCE CLASS	Class	4L4T8-LP	2455	100%	1	98	2L4T8-SP-24RFL-OS	1719	75%	1	54	0.058	148	$ 14.99
RESOURCE CLASS	Class	NOTHING	2455	100%	1	0	WSIR	2455	100%	1	0	-	-	$ -
CUSTODIAL OFFICE	Offices, Private	1L8T8-SP	2271	50%	1	70	1L8T8-SP-NR-OS	1590	38%	1	70	0.009	48	$ 4.30
CUSTODIAL OFFICE	Offices, Private	NOTHING	2271	50%	1	0	WSIR	2271	50%	1	0	-	-	$ -
CLASS PRIMARY	Class	4L4T8-LP	2455	100%	11	98	2L4T8-SP-24RFL-OS	1719	75%	11	54	0.633	1,625	$ 164.89
CLASS PRIMARY	Class	NOTHING	2455	100%	1	0	WCDT	2455	100%	1	0	-	-	$ -
CLASS PRIMARY	Class	4L4T8-LP	2455	100%	12	98	2L4T8-SP-24RFL-OS	1719	75%	12	54	0.690	1,773	$ 179.89
CLASS PRIMARY	Class	NOTHING	2455	100%	1	0	WCDT	2455	100%	1	0	-	-	$ -
CLASS PRIMARY	Class	4L4T8-LP	2455	100%	12	98	2L4T8-SP-24RFL-OS	1719	75%	12	54	0.690	1,773	$ 179.89
CLASS PRIMARY	Class	NOTHING	2455	100%	1	0	WCDT	2455	100%	1	0	-	-	$ -
BOYS RESTROOM	Halls Middle & Elem	2L4T8-LP	3646	100%	2	51	REMOVE	3646	100%	2	0	0.102	372	$ 35.40
BOYS RESTROOM	Halls Middle & Elem	NOTHING	3646	100%	1	0	N2L4T8-SP-8'WR	3646	100%	1	54	(0.054)	(197)	$ (18.74)
GIRLS RESTROOM	Halls Middle & Elem	2L4T8-LP	3646	100%	1	51	REMOVE	3646	100%	1	0	0.051	186	$ 17.70
GIRLS RESTROOM	Halls Middle & Elem	NOTHING	3646	100%	1	0	N1L4T8-HP-4'WR	3646	100%	1	38	(0.038)	(139)	$ (13.19)
KINDERGARTEN 109	Class	4L4T8-LP	2455	100%	14	98	2L4T8-SP-24RFL-OS	1719	75%	14	54	0.805	2,069	$ 209.87
KINDERGARTEN 109	Class	NOTHING	2455	100%	1	0	WCDT	2455	100%	1	0	-	-	$ -
RRS	Private RR	2L100IN	2250	10%	2	200	N2L2T8-SP-2'WL	2250	10%	2	32	0.034	756	$ 62.51
CUSTODIAL	Custodial	1L4T8-SP	2250	30%	1	32	NO RETRO	2250	30%	1	32	-	-	$ -
MULTI PURPOSE ROOM	Halls Middle & Elem	1L400HID	2523	100%	12	458	N6L4T8-HP-LNS-WG-OS	1766	75%	12	222	3.498	9,162	$ 925.80
MULTI PURPOSE ROOM	Halls Middle & Elem	2L8T8-SP	2523	100%	6	110	REMOVE	2523	100%	6	0	0.660	1,665	$ 169.58
MULTI PURPOSE ROOM	Halls Middle & Elem	NOTHING	2523	100%	2	0	WCIR	2523	100%	2	0	-	-	$ -
KITCHEN	Kitchen	2L4T8-LP	800	100%	10	51	NO RETRO	800	100%	10	51	-	-	$ -
TABLE STORAGE	Storage	2L8T8-SP	2250	20%	2	110	2L8T8-SP-NR-OS	1590	15%	2	110	0.011	145	$ 12.25
TABLE STORAGE	Storage	NOTHING	2250	20%	1	0	WSIR	2250	20%	1	0	-	-	$ -
MECH / MAINT	Mechanical	2L8T8-SP	2250	10%	2	110	2L8T8-SP-NR-OS	1590	8%	2	110	0.006	145	$ 11.95
MECH / MAINT	Mechanical	NOTHING	2250	10%	1	0	WSIR	2250	10%	1	0	-	-	$ -
GYM STORAGE	Storage	2L8T8-SP	2250	20%	2	110	2L8T8-SP-NR-OS	1590	15%	2	110	0.011	145	$ 12.25
GYM STORAGE	Storage	NOTHING	2250	20%	1	0	WSIR	2250	20%	1	0	-	-	$ -
STAGE / MUSIC CLASS	Class	4L4T8-LP	2455	100%	13	98	2L4T8-SP-24RFL-OS	1719	75%	13	54	0.748	1,921	$ 194.88
STAGE / MUSIC CLASS	Class	NOTHING	2455	100%	1	0	WCIR	2455	100%	1	0	-	-	$ -

BUILDING:	Grand Lake Elementary	
LIGHTING CONTRACTOR:	RetroTech Systems	
ELECTRIC CONSUMPTION RATE:	$0.0803	per kWh
ELECTRIC DEMAND RATE:	$4.5349	per kW
HEATING FUEL RATE:	$8.6421	per MMBtu

ECM 5.1: Lighting System Upgrades

		PRE-RETROFIT					POST-RETROFIT ("AS-BUILT")							
AREA	USAGE TYPE	EXISTING FIXTURE DESCRIPTION	ANNUAL HOURS	Demand Div Factor	QTY	WATTS EACH*	RETROFIT DESCRIPTION	ANNUAL HOURS	Demand Div Factor	QTY	WATTS EACH**	TOTAL KW SAVED	KWH SAVED PER YR	ANNUAL MONETARY SAVINGS
STAGE CORRIDOR	Halls Middle & Elem	4L4T8-SP	3646	100%	3	112	2L4T8-SP-24RFL	3646	100%	3	54	0.174	634	$ 60.39
BOYS RESTROOM	Halls Middle & Elem	2L4T8-LP	3646	100%	2	51	REMOVE	3646	100%	2	0	0.102	372	$ 35.40
BOYS RESTROOM	Halls Middle & Elem	NOTHING	3646	100%	1	0	N2L4T8-SP-8'WR	3646	100%	1	54	(0.054)	(197)	$ (18.74)
GIRLS RESTROOM	Halls Middle & Elem	2L4T8-LP	3646	100%	1	51	REMOVE	3646	100%	1	0	0.051	186	$ 17.70
GIRLS RESTROOM	Halls Middle & Elem	NOTHING	3646	100%	1	0	N1L4T8-HP-4'WR	3646	100%	1	38	(0.038)	(139)	$ (13.19)
CENTER HALLS	Halls Middle & Elem	4L4T8-LP	3646	100%	27	98	2L4T8-SP-24RFL	3646	100%	27	54	1.188	4,331	$ 412.35
CENTER HALLS	EM/Night	LED EXIT	8766	100%	7	3	NO RETRO	8766	100%	7	3	-	-	$ -
TOTALS					269					269		12.856	37,531	$ 3,712.27

* Based on ANSI wattages - to be verified by contractor
** Based on manufacturer's wattages - to be verified by contractor

BUILDING: Indian Peaks Charter School
LIGHTING CONTRACTOR: RetroTech Systems
ELECTRIC CONSUMPTION RATE: $0.0907 per kWh
ELECTRIC DEMAND RATE: $0.0000 per kW
HEATING FUEL RATE: $10.5190 per MMBtu

ECM 5.1: Lighting System Upgrades

		PRE-RETROFIT					POST-RETROFIT ("AS-BUILT")							
AREA	USAGE TYPE	EXISTING FIXTURE DESCRIPTION	ANNUAL HOURS	Demand Div Factor	QTY	WATTS EACH*	RETROFIT DESCRIPTION	ANNUAL HOURS	Demand Div Factor	QTY	WATTS EACH**	TOTAL KW SAVED	KWH SAVED PER YR	ANNUAL MONETARY SAVINGS
LUNCH ROOM	Kitchen	2L4T8-SP-24RFL	1600	100%	12	112	2L4T8-SP-24RFL	1600	100%	12	54	0.696	1,114	$ 101.00
LUNCH ROOM	EM/Night	NO RETRO	8766	100%	2	3	NO RETRO	8766	100%	2	3	-	-	$ -
KITCHEN	Kitchen	NO RETRO	1600	100%	6	112	NO RETRO	1600	100%	6	112	-	-	$ -
MAIN OFFICE	Common Admin	NO RETRO	1600	100%	2	112	NO RETRO	1600	100%	2	112	-	-	$ -
CONFERENCE ROOM	Conference	NO RETRO	1600	40%	1	112	NO RETRO	1600	40%	1	112	-	-	$ -
SICK ROOM	Offices, Private	NO RETRO	1600	50%	1	112	NO RETRO	1600	50%	1	112	-	-	$ -
KINDERGARTEN	Class	2L4T8-SP-24RFL	1600	100%	11	112	2L4T8-SP-24RFL	1600	100%	11	54	0.638	1,021	$ 92.58
KINDERGARTEN	EM/Night	NO RETRO	8766	100%	1	3	NO RETRO	8766	100%	1	3	-	-	$ -
1ST & 2ND GRADE	Class	2L4T8-SP-24RFL	1600	100%	12	112	2L4T8-SP-24RFL	1600	100%	12	54	0.696	1,114	$ 101.00
1ST & 2ND GRADE	EM/Night	NO RETRO	8766	100%	1	3	NO RETRO	8766	100%	1	3	-	-	$ -
RESTROOMS	Halls Middle & Elem	2L4T8-SP-24RFL	1600	100%	4	112	2L4T8-SP-24RFL	1600	100%	4	54	0.232	371	$ 33.67
FOREIGN LANGUAGE	Class	2L4T8-SP-24RFL	1600	100%	6	112	2L4T8-SP-24RFL	1600	100%	6	54	0.348	557	$ 50.50
HALLS	Halls Middle & Elem	2L4T8-SP-24RFL	1600	100%	5	112	2L4T8-SP-24RFL	1600	100%	5	54	0.290	464	$ 42.08
HALLS	EM/Night	NO RETRO	8766	100%	2	3	NO RETRO	8766	100%	2	3	-	-	$ -
LIBRARY (WEST MOD)	Class	2L4T8-SP-24RFL	1600	100%	5	144	2L4T8-SP-24RFL	1600	100%	5	54	0.450	720	$ 65.30
LIBRARY	EM/Night	NO RETRO	8766	100%	1	3	NO RETRO	8766	100%	1	3	-	-	$ -
3RD & 4TH GRADE	Class	2L4T8-SP-24RFL	1600	100%	6	144	2L4T8-SP-24RFL	1600	100%	6	54	0.540	864	$ 78.36
SPECIAL ED	Class	2L4T8-SP-24RFL	1600	100%	2	144	2L4T8-SP-24RFL	1600	100%	2	54	0.180	288	$ 26.12
GIRLS RESTROOM	Halls Middle & Elem	2L4T8-SP-24RFL	1600	100%	1	144	2L4T8-SP-24RFL	1600	100%	1	54	0.090	144	$ 13.06
BOYS RESTROOM	Halls Middle & Elem	NO RETRO	1600	100%	1	58	NO RETRO	1600	100%	1	58	-	-	$ -
CORRIDOR	Halls Middle & Elem	2L4T8-SP-24RFL	1600	100%	2	144	2L4T8-SP-24RFL	1600	100%	2	54	0.180	288	$ 26.12
HALL (EAST MOD)	Halls Middle & Elem	NO RETRO	1600	100%	3	58	NO RETRO	1600	100%	3	58	-	-	$ -
7TH & 8TH GRADE	Class	NO RETRO	1600	100%	8	58	NO RETRO	1600	100%	8	58	-	-	$ -
FILE ROOM	Storage	NO RETRO	1600	20%	1	58	NO RETRO	1600	20%	1	58	-	-	$ -
5TH & 6TH GRADE	Class	NO RETRO	1600	100%	12	58	NO RETRO	1600	100%	12	58	-	-	$ -
5TH & 6TH GRADE	EM/Night	NO RETRO	8766	100%	1	3	NO RETRO	8766	100%	1	3	-	-	$ -
TOTALS					109					109		4.340	6,944	$ 629.80

* Based on ANSI wattages - to be verified by contractor
** Based on manufacturer's wattages - to be verified by contractor

5.1a

BUILDING:	District Office	
LIGHTING CONTRACTOR:	RetroTech Systems	
ELECTRIC CONSUMPTION RATE:	$0.0907	per kWh
ELECTRIC DEMAND RATE:	$0.0000	per kW
HEATING FUEL RATE:	$10.1227	per MMBtu

ECM 5.1: Lighting System Upgrades

		PRE-RETROFIT					POST-RETROFIT ("AS-BUILT")							
AREA	USAGE TYPE	EXISTING FIXTURE DESCRIPTION	ANNUAL HOURS	Demand Div Factor	QTY	WATTS EACH*	RETROFIT DESCRIPTION	ANNUAL HOURS	Demand Div Factor	QTY	WATTS EACH**	TOTAL KW SAVED	KWH SAVED PER YR	ANNUAL MONETARY SAVINGS
CONFERENCE ROOM	Conference	4L4T8-LP	2000	40%	6	98	2L4T8-SP-24RFL	2000	40%	6	54	0.106	528	$ 47.89
CHAIMBERLIN OFFICE	Offices Admin	4L4T8-LP	2000	90%	2	98	NO RETRO	2000	90%	2	98	-	-	$ -
LUND OFFICE	Offices Admin	4L4T8-LP	2000	90%	1	98	NO RETRO	2000	90%	1	98	-	-	$ -
WENINGER OFFICE	Offices Admin	4L4T8-LP	2000	90%	2	98	NO RETRO	2000	90%	2	98	-	-	$ -
OFFICE	Offices Admin	4L4T8-LP	2000	90%	2	98	NO RETRO	2000	90%	2	98	-	-	$ -
BREAK ROOM	Offices Admin	4L4T8-LP	2000	90%	4	98	2L4T8-SP-24RFL	2000	90%	4	54	0.158	352	$ 31.93
SCHMIEDBAUER OFFICE	Offices Admin	4L4T8-LP	2000	90%	4	98	2L4T8-SP-24RFL	2000	90%	4	54	0.158	352	$ 31.93
KNOX OFFICE	Offices Admin	4L4T8-LP	2000	90%	2	98	NO RETRO	2000	90%	2	98	-	-	$ -
WORK ROOM	Offices Admin	4L4T8-LP	2000	90%	2	98	NO RETRO	2000	90%	2	98	-	-	$ -
SUPERINTENDANT OFFICE	Offices Admin	4L4T8-LP	2000	90%	4	98	2L4T8-SP-24RFL	2000	90%	4	54	0.158	352	$ 31.93
CUSTODIAL	Custodial	1L100IN	2000	30%	1	100	1L25CF	2000	30%	1	25	0.023	150	$ 13.60
COMMON AREA	Offices Admin	4L4T8-LP	2000	90%	15	98	2L4T8-SP-24RFL	2000	90%	15	54	0.594	1,320	$ 119.72
COMMON AREA	Offices Admin	1L15CF-R30	2000	90%	6	15	NO RETRO	2000	90%	6	15	-	-	$ -
COMMON AREA	EM/Night	LED EXIT	8766	100%	1	3	NO RETRO	8766	100%	1	3	-	-	$ -
BOARD ROOM	Conference	4L4T8-LP	120	40%	15	98	NO RETRO	120	40%	15	98	-	-	$ -
CORRIDOR	Conference	4L4T8-LP	760	40%	2	98	2L4T8-SP-24RFL	760	40%	2	54	0.035	67	$ 6.07
MENS RESTROOM	Common RR	2L4T8-LP	760	100%	1	51	NO RETRO	760	100%	1	51	-	-	$ -
MENS RESTROOM	Common RR	2L2T12	760	100%	1	49	2L2T8-LP	760	100%	1	28	0.021	16	$ 1.45
WOMENS RESTROOM	Common RR	2L4T8-LP	760	100%	1	51	NO RETRO	760	100%	1	51	-	-	$ -
WOMENS RESTROOM	Common RR	2L4T8-LP	760	100%	1	51	NO RETRO	760	100%	1	51	-	-	$ -
FILE STORAGE	Storage	4L4T8-LP	2000	20%	6	98	NO RETRO	2000	20%	6	98	-	-	$ -
MAINT SHOP	Offices Admin	4L4T8-LP	2200	90%	2	98	NO RETRO	2200	90%	2	98	-	-	$ -
MAINT OFFICE	Offices Admin	4L4T8-LP	2200	90%	4	98	2L4T8-SP-24RFL-OS	2200	68%	4	54	0.207	387	$ 35.12
MAINT OFFICE	Offices Admin	NOTHING	2200	90%	1	0	WSDT	2200	90%	1	0	-	-	$ -
WAREHOUSE	Warehouse	1L400HID	2200	100%	10	458	N6L4T8-HP-8'IND-OS	1540	75%	10	222	2.915	6,657	$ 603.79
WAREHOUSE	Warehouse	NOTHING	2200	100%	10	0	FIXT MOUNT IR SENSOR	2200	100%	10	0	-	-	$ -
WAREHOUSE	EM/Night	LED EXIT	8766	100%	2	3	NO RETRO	8766	100%	2	3	-	-	$ -
MEZZANINE STORAGE	Storage	2L8T8-SP	760	20%	4	110	NO RETRO	760	20%	4	110	-	-	$ -
TOTALS					112					112		4.376	10,181	$ 923.41

* Based on ANSI wattages - to be verified by contractor

** Based on manufacturer's wattages - to be verified by contractor

BUILDING:	Transportation Facility	
LIGHTING CONTRACTOR:	RetroTech Systems	
ELECTRIC CONSUMPTION RATE:	$0.0907	per kWh
ELECTRIC DEMAND RATE:	$0.0000	per kW
HEATING FUEL RATE:	$8.6421	per MMBtu

ECM 5.1: Lighting System Upgrades

		PRE-RETROFIT					POST-RETROFIT ("AS-BUILT")							
AREA	USAGE TYPE	EXISTING FIXTURE DESCRIPTION	ANNUAL HOURS	Demand Div Factor	QTY	WATTS EACH*	RETROFIT DESCRIPTION	ANNUAL HOURS	Demand Div Factor	QTY	WATTS EACH**	TOTAL KW SAVED	KWH SAVED PER YR	ANNUAL MONETARY SAVINGS
ENTRY VESTIBULE	Halls Middle & Elem	2L42CF	2200	100%	1	84	2L42CF-NR-OS-PC	770	38%	1	84	0.053	120	$ 10.89
ENTRY VESTIBULE	Halls Middle & Elem	NOTHING	2200	100%	1	0	WSIR-PC	1100	50%	1	0	-	-	$ -
DRIVER LOUNGE	Common Admin	2L4T8-SP	2200	100%	4	58	2L4T8-SP-NR-OS	1540	75%	4	58	0.058	153	$ 13.89
DRIVER LOUNGE	Common Admin	NOTHING	2200	100%	1	0	CDT	2200	100%	1	0	-	-	$ -
DRIVER LOUNGE	EM/Night	2L4T8-SP-EM	8766	100%	1	58	NO RETRO	8766	100%	1	58	-	-	$ -
RRS	Private RR	2L4T8-SP	540	10%	2	58	2L4T8-SP-NR-OS	378	8%	2	58	0.003	19	$ 1.70
RRS	Private RR	NOTHING	540	10%	2	0	WSIR	540	10%	2	0	-	-	$ -
SHOWER	Private RR	1L42CF	540	10%	1	42	NO RETRO	540	10%	1	42	-	-	$ -
BUS GARAGE	Common Admin	4L4T8-SP	2200	100%	34	112	4L4T8-SP-NR-OS	1540	75%	34	112	0.952	2,513	$ 227.95
BUS GARAGE	Common Admin	2L4T8-SP	2200	100%	6	58	2L4T8-SP-NR-OS	1540	75%	6	58	0.087	230	$ 20.83
BUS GARAGE	EM/Night	4L4T8-SP-EM	8766	100%	2	112	NO RETRO	8766	100%	2	112	-	-	$ -
BUS GARAGE	EM/Night	2L4T8-SP-EM	8766	100%	6	58	NO RETRO	8766	100%	6	58	-	-	$ -
BUS GARAGE	Common Admin	NOTHING	2200	100%	6	0	WCIR	2200	100%	6	0	-	-	$ -
BUS GARAGE	EM/Night	LED EXIT	8766	100%	4	3	NO RETRO	8766	100%	4	3	-	-	$ -
SMALL SERVICE BAY	Common Admin	1L350HID-LR	2200	100%	4	375	N6L4T8-HP-8'IND-OS	1540	75%	4	222	0.834	1,932	$ 175.27
SMALL SERVICE BAY	Common Admin	NOTHING	2200	100%	2	0	WCDT	2200	100%	2	0	-	-	$ -
SMALL SERVICE BAY	EM/Night	LED EXIT	8766	100%	1	3	NO RETRO	8766	100%	1	3	-	-	$ -
BIG SERVICE BAY	Common Admin	1L350HID-LR	2200	100%	9	375	N6L4T8-HP-8'IND-OS	1540	75%	9	222	1.877	4,348	$ 394.36
BIG SERVICE BAY	Common Admin	NOTHING	2200	100%	4	0	WCDT	2200	100%	4	0	-	-	$ -
BIG SERVICE BAY	EM/Night	LED EXIT	8766	100%	1	3	NO RETRO	8766	100%	1	3	-	-	$ -
SHOP OFFICE	Offices, Private	3L4T8-SP	2200	50%	2	85	3L4T8-SP-NR-OS	1540	38%	2	85	0.021	112	$ 10.18
SHOP OFFICE	Offices, Private	NOTHING	2200	50%	1	0	WSDT	2200	50%	1	0	-	-	$ -
PARTS ROOM	Common Admin	4L4T8-SP	2200	100%	4	112	4L4T8-SP-NR-OS	1540	75%	4	112	0.112	296	$ 26.82
PARTS ROOM	Common Admin	NOTHING	2200	100%	1	0	WSDT	1540	100%	1	0	-	-	$ -
MEZZANINE CLASS	Storage	4L4T8-SP	540	20%	8	112	NO RETRO	540	20%	8	112	-	-	$ -
WASH BAY	Common Admin	4L4T8-SP	2200	100%	8	112	4L4T8-SP-NR-OS	1540	75%	8	112	0.224	591	$ 53.63
WASH BAY	Common Admin	NOTHING	2200	100%	2	0	WET LOC IR	2200	100%	2	0	-	-	$ -
TOTALS					118					118		4.220	10,315	$ 935.53

* Based on ANSI wattages - to be verified by contractor

** Based on manufacturer's wattages - to be verified by contractor

Annual Runtime Hours and Demand Diversity Factors

Usage Group	Average Annual Hours	Demand Diversity Factors
MPHS - classrooms	1,987	100.0%
MPHS - auditorium*	2,097	90.0%
MPHS - dining area*	2,733	100.0%
MPHS - corridors*	4,163	100.0%
MPHS - restrooms*	4,163	100.0%
MPHS - library*	2,000	100.0%
MPHS - kitchen & food prep*	1,000	90.0%
MPHS - gyms & exercise centers*	2,733	100.0%
MPHS - admin offices*	2,250	100.0%
EGMS - classrooms	2,365	90.0%
EGMS - band/music*	2,365	90.0%
EGMS - dining area*	2,733	100.0%
EGMS - corridors	4,163	100.0%
EGMS - restrooms*	4,163	100.0%
EGMS - library*	2,365	100.0%
EGMS - kitchen & food prep*	1,000	90.0%
EGMS - gym*	2,733	100.0%
EGMS - admin offices*	2,250	100.0%
GES - classrooms	2,455	100.0%
GES - dining area*	2,250	100.0%
GES - corridors*	3,646	100.0%
GES - restrooms*	3,646	100.0%
GES - library*	2,000	100.0%
GES - kitchen & food prep*	800	90.0%
GES - gym *	2,330	90.0%
GES - admin offices*	2,271	100.0%
IPCS - classrooms*	1,600	100.0%
IPCS - corridors*	1,600	100.0%
IPCS - restrooms*	1,600	100.0%
IPCS - admin offices*	1,600	100.0%
DO - open offices*	2,000	100.0%
DO - private offices*	2,000	100.0%
DO - break room*	2,000	100.0%
DO - conference room*	2,000	90.0%
DO - boardroom*	120	50.0%
DO - corridors*	2,000	90.0%
DO - restrooms	760	50.0%
DO warehouse mezzanine	760	50.0%
DO - warehouse*	2,200	100.0%
TF - offices*	2,200	90.0%
TF - classroom*	2,200	100.0%
TF - break room*	2,200	90.0%
TF - maintenance shop*	2,200	100.0%
TF - bus bay*	2,200	50.0%
TF - restrooms*	540	50.0%
TF - shop mezzanine*	540	50.0%
GLES - classrooms*	2,455	100.0%
GLES - dining area*	2,250	90.0%
GLES - corridors*	3,646	100.0%
GLES - restrooms*	3,646	90.0%
GLES - library*	2,000	100.0%
GLES - kitchen & food prep*	800	50.0%
GLES - gym*	2,523	100.0%
GLES - admin offices*	2,271	100.0%
FVES - classrooms*	2,455	90.0%
FVES - band/music*	2,455	90.0%
FVES - dining area*	2,250	100.0%
FVES - corridors*	3,646	100.0%
FVES - restrooms*	3,646	100.0%
FVES - library*	2,000	100.0%
FVES - kitchen & food prep	800	50.0%
FVES - gym*	2,523	100.0%
FVES - multipurpose*	2,523	90.0%
FVES - admin offices*	2,271	100.0%
Exit signs - all buildings	8,760	100.0%

The values in the above table were estimated based on datalogger results for a four to five week period in April and early May. Those denoted with an asterisk are estimated based on results for similar spaces and building occupancy schedules.

East Grand School District - Lighting Retrofit - Change Order 3 Scope of Work (Fixtures Not Included in Original Scope Survey)

	MP High School						395			12.178			27,980				$ 1,776.22
	EG Middle School						84			0.943			2,321				$ 147.04
	Granby ES						511			12.679			32,694				$ 2,307.01
	Indian Peaks Charter						66			0.462			739				$ 67.04
	District Office						37			1.117			1,839				$ 166.84
	Transportation						77			0.856			2,049				$ 185.81
	Grand Lake ES						41			1.567			3,543				$ 291.49
	Fraser Valley ES						301			7.970			21,485				$ 1,312.85
	Totals						**1,512**			**37.771**			**92,651**				**$ 6,254.31**
ID#	**Facility**	**Area**	**Room Type**	**Exist Fixture Type**	**Ex. Watts**	**Original Scope Prop. Fixt. Type**	**Fixt Qty**	**RTS Prop. Fixt. Type**	**Prop. Watts**	**kW Saved**	**kW Div Factor**	**Hours**	**kWh Saved**	**kW Rate**	**kWh Rate**	**Total Savings**	
1	MP High School	MAIN OFFICE	Common Admin	2L-T8	58	ZZ DD	4	R 2L[T8-2-32-IS-LP]	51	0.028	100%	2,250	63	$ 4.5349	$ 0.0615	$ 4.00	
2	MP High School	MAIN OFFICE	Common Admin	3L-T8	85	ZZ DD	2	RF 2LR[T8-2-32-IS-SP]	54	0.062	100%	2,250	140	$ 4.5349	$ 0.0615	$ 8.86	
3	MP High School	COPY AREA	Common Admin	2L-T8	58	ZZ DD	2	R 2L[T8-2-32-IS-LP]	51	0.014	100%	2,250	32	$ 4.5349	$ 0.0615	$ 2.00	
4	MP High School	COPY AREA	Common Admin	3L-T8	85	ZZ DD	1	RF 2LR[T8-2-32-IS-SP]	54	0.031	100%	2,250	70	$ 4.5349	$ 0.0615	$ 4.43	
5	MP High School	CONFERENCE ROOM	Conference	3LDS-T8	85	ZZ DD	3	RF 2LR[T8-2-32-IS-SP]	54	0.037	40%	840	78	$ 4.5349	$ 0.0615	$ 4.97	
6	MP High School	PRINCIPAL OFFICE 101B	Offices, Private	3LDS-T8	85	ZZ DD	4	RF 2LR[T8-2-32-IS-SP]	54	0.062	50%	1,440	179	$ 4.5349	$ 0.0615	$ 11.26	
7	MP High School	ASST PRINCIPAL 101C	Offices, Private	3LDS-T8	85	ZZ DD	3	RF 2LR[T8-2-32-IS-SP]	54	0.047	50%	1,440	134	$ 4.5349	$ 0.0615	$ 8.45	
8	MP High School	ELECTRIC ROOM	Mechanical	4L-T8	112	ZZ DD	1	RF 2LR[T8-2-32-IS-SP]	54	0.006	10%	520	30	$ 4.5349	$ 0.0615	$ 1.88	
9	MP High School	NUTRITION 103	Kitchen	3L-T8	85	ZZ DD	4	RF 2LR[T8-2-32-IS-SP]	54	0.112	90%	1,000	124	$ 4.5349	$ 0.0615	$ 8.13	
10	MP High School	CONCESSION 105	Storage	3L-T8	85	ZZ DD	2	RF 2LR[T8-2-32-IS-SP]	54	0.012	20%	540	33	$ 4.5349	$ 0.0615	$ 2.12	
11	MP High School	MENS RR	Halls High School	3L-T8	85	ZZ DD	3	RF 2LR[T8-2-32-IS-SP]	54	0.093	100%	4,163	387	$ 4.5349	$ 0.0615	$ 24.23	
12	MP High School	WOMENS RR	Halls High School	3L-T8	85	ZZ DD	6	RF 2LR[T8-2-32-IS-SP]	54	0.186	100%	4,163	774	$ 4.5349	$ 0.0615	$ 48.47	
13	MP High School	GYM STORAGE 607	Storage	4L-T8	112	ZZ DD	1	RF 2LR[T8-2-32-IS-SP]	54	0.012	20%	540	31	$ 4.5349	$ 0.0615	$ 1.98	
14	MP High School	GYM STOR/OFFICE 609	Offices, Private	4L-T8	112	ZZ DD	2	RF 2LR[T8-2-32-IS-SP]	54	0.058	50%	1,440	167	$ 4.5349	$ 0.0615	$ 10.54	
15	MP High School	WOMENS LOCKERS	Gym	3L-T8	85	ZZ DD	9	RF 2LR[T8-2-32-IS-SP]	54	0.279	100%	2,733	763	$ 4.5349	$ 0.0615	$ 48.17	
16	MP High School	WOMENS LOCKERS	EM/Night	3L-T8	85	ZZ DD	1	RF 2LR[T8-2-32-IS-SP]	54	0.031	100%	8,760	272	$ 4.5349	$ 0.0615	$ 16.84	
17	MP High School	MENS LOCKERS	Gym	3L-T8	85	ZZ DD	9	RF 2LR[T8-2-32-IS-SP]	54	0.279	100%	2,733	763	$ 4.5349	$ 0.0615	$ 48.17	
18	MP High School	MENS LOCKERS	EM/Night	3L-T8	85	ZZ DD	1	RF 2LR[T8-2-32-IS-SP]	54	0.031	100%	8,760	272	$ 4.5349	$ 0.0615	$ 16.84	
19	MP High School	WEIGHT ROOM 611	Class	3L-T8	85	ZZ DD	17	RF 2LR[T8-2-32-IS-SP]	54	0.527	100%	1,987	1,047	$ 4.5349	$ 0.0615	$ 66.80	
20	MP High School	MECH 611A	Mechanical	4L-T8	112	ZZ DD	2	RF 2LR[T8-2-32-IS-SP]	54	0.116	100%	540	63	$ 4.5349	$ 0.0615	$ 4.38	
21	MP High School	GYM CORRIDOR	EM/Night	3L-T8	85	ZZ DD	1	RF 2LR[T8-2-32-IS-SP]	54	0.031	100%	8,760	272	$ 4.5349	$ 0.0615	$ 16.84	
22	MP High School	CLASS 618	Class	3LDS-T8	85	ZZ DD	15	RF 2LR[T8-2-32-IS-SP]	54	0.465	100%	1,987	924	$ 4.5349	$ 0.0615	$ 58.94	
23	MP High School	TREATMENT 616A	Class	3L-T8	85	ZZ DD	2	RF 2LR[T8-2-32-IS-SP]	54	0.062	100%	1,987	123	$ 4.5349	$ 0.0615	$ 7.86	
24	MP High School	STAFF LOUNGE	Offices, Private	3LDS-T8	85	ZZ DD	10	RF 2LR[T8-2-32-IS-SP]	54	0.310	100%	2,250	698	$ 4.5349	$ 0.0615	$ 44.31	
25	MP High School	MEDIA CLASS AREA	Class	3L-T8	85	ZZ DD	9	RF 2LR[T8-2-32-IS-SP]	54	0.279	100%	1,987	554	$ 4.5349	$ 0.0615	$ 35.36	
26	MP High School	CLASS 301	Class	3LDS-T8	85	ZZ DD	12	RF 2LR[T8-2-32-IS-SP]	54	0.372	100%	1,987	739	$ 4.5349	$ 0.0615	$ 47.15	
27	MP High School	CAREER CENTER 104	Common Admin	3LDS-T8	85	ZZ DD	8	RF 2LR[T8-2-32-IS-SP]	54	0.248	100%	2,250	558	$ 4.5349	$ 0.0615	$ 35.45	
28	MP High School	CAREER OFFICE 104F	Offices, Private	3LDS-T8	85	ZZ DD	3	RF 2LR[T8-2-32-IS-SP]	54	0.047	50%	2,250	209	$ 4.5349	$ 0.0615	$ 13.08	
29	MP High School	CLINIC 102	Common Admin	3LDS-T8	85	ZZ DD	6	RF 2LR[T8-2-32-IS-SP]	54	0.186	100%	2,250	419	$ 4.5349	$ 0.0615	$ 26.58	
30	MP High School	SPECIAL ED CLASS 202	Class	3LDS-T8	85	ZZ DD	8	RF 2LR[T8-2-32-IS-SP]	54	0.248	100%	1,987	493	$ 4.5349	$ 0.0615	$ 31.43	
31	MP High School	SPED FILE ROOM	Storage	3L-T8	85	ZZ DD	1	RF 2LR[T8-2-32-IS-SP]	54	0.006	20%	540	17	$ 4.5349	$ 0.0615	$ 1.06	
32	MP High School	SPED RR	Private RR	3L-T8	85	ZZ DD	1	RF 2LR[T8-2-32-IS-SP]	54	0.003	10%	1,000	31	$ 4.5349	$ 0.0615	$ 1.92	
33	MP High School	SPED OFFICE	Private RR	3L-T8	85	ZZ DD	2	RF 2LR[T8-2-32-IS-SP]	54	0.006	10%	1,000	62	$ 4.5349	$ 0.0615	$ 3.84	
34	MP High School	STORAGE 2	Storage	2L-T8	58	ZZ DD	2	R 2L[T8-2-32-IS-LP]	51	0.003	20%	540	8	$ 4.5349	$ 0.0615	$ 0.48	
35	MP High School	STORAGE 402	Storage	3L-T8	85	ZZ DD	4	RF 2LR[T8-2-32-IS-SP]	54	0.025	20%	540	67	$ 4.5349	$ 0.0615	$ 4.23	
36	MP High School	WORK ROOM 406	Offices, Private	3LDS-T8	85	ZZ DD	8	RF 2LR[T8-2-32-IS-SP]	54	0.124	50%	1,440	357	$ 4.5349	$ 0.0615	$ 22.53	
37	MP High School	SCIENCE 408	Class	3LDS-T8	85	ZZ DD	1	RF 2LR[T8-2-32-IS-SP]	54	0.031	100%	1,987	62	$ 4.5349	$ 0.0615	$ 3.93	
38	MP High School	SCIENCE 408	Class	3L2'-T8	45	ZZ DD	1	RF 2LR2'[T8-2-32-IS-SP]	30	0.015	100%	1,987	30	$ 4.5349	$ 0.0615	$ 1.90	
39	MP High School	SCIENCE 401	Class	3LDS-T8	85	ZZ DD	20	RF 2LR[T8-2-32-IS-SP]	54	0.620	100%	1,987	1,232	$ 4.5349	$ 0.0615	$ 78.59	
40	MP High School	WORK / STOR 401A	Offices, Private	3L-T8	85	ZZ DD	4	RF 2LR[T8-2-32-IS-SP]	54	0.062	50%	1,440	179	$ 4.5349	$ 0.0615	$ 11.26	
41	MP High School	CUST / STOR 403	Custodial	4L-T8	112	ZZ DD	1	RF 2LR[T8-2-32-IS-SP]	54	0.017	30%	540	31	$ 4.5349	$ 0.0615	$ 2.01	
42	MP High School	ELECTRIC ROOM 403A	Mechanical	2L-T8	58	ZZ DD	1	R 2L[T8-2-32-IS-LP]	51	0.001	10%	540	4	$ 4.5349	$ 0.0615	$ 0.24	

ID#	Facility	Area	Room Type	Exist Fixture Type	Ex. Watts	Original Scope Prop. Fixt. Type	Fixt Qty	RTS Prop. Fixt. Type	Prop. Watts	kW Saved	kW Div Factor	Hours	kWh Saved	kW Rate	kWh Rate	Total Savings
43	MP High School	CLASS 405	Class	3LDS-T8	85	ZZ DD	12	RF 2LR[T8-2-32-IS-SP]	54	0.372	100%	1,987	739	$ 4.5349	$ 0.0615	$ 47.15
44	MP High School	CLASS 407	Class	3LDS-T8	85	ZZ DD	12	RF 2LR[T8-2-32-IS-SP]	54	0.372	100%	1,987	739	$ 4.5349	$ 0.0615	$ 47.15
45	MP High School	CLASS 409	Class	3LDS-T8	85	ZZ DD	12	RF 2LR[T8-2-32-IS-SP]	54	0.372	100%	1,987	739	$ 4.5349	$ 0.0615	$ 47.15
46	MP High School	CLASS 412	Class	3LDS-T8	85	ZZ DD	12	RF 2LR[T8-2-32-IS-SP]	54	0.372	100%	1,987	739	$ 4.5349	$ 0.0615	$ 47.15
47	MP High School	CLASS 410	Class	3LDS-T8	85	ZZ DD	12	RF 2LR[T8-2-32-IS-SP]	54	0.372	100%	1,987	739	$ 4.5349	$ 0.0615	$ 47.15
48	MP High School	FIRE RISER ROOM	Mechanical	4L-T8	112	ZZ DD	1	RF 2LR[T8-2-32-IS-SP]	54	0.006	10%	540	31	$ 4.5349	$ 0.0615	$ 1.95
49	MP High School	CLASS 310	Class	4L-T8	112	ZZ DD	18	RF 2LR[T8-2-32-IS-SP]	54	1.044	100%	1,987	2,074	$ 4.5349	$ 0.0615	$ 132.33
50	MP High School	WORK / STOR	Offices, Private	3L-T8	85	ZZ DD	2	RF 2LR[T8-2-32-IS-SP]	54	0.031	50%	1,440	89	$ 4.5349	$ 0.0615	$ 5.63
51	MP High School	CLASS 312	Class	4L-T8	112	ZZ DD	9	RF 2LR[T8-2-32-IS-SP]	54	0.522	100%	1,987	1,037	$ 4.5349	$ 0.0615	$ 66.16
52	MP High School	CLASS 314	Class	4L-T8	112	ZZ DD	9	RF 2LR[T8-2-32-IS-SP]	54	0.522	100%	1,987	1,037	$ 4.5349	$ 0.0615	$ 66.16
53	MP High School	CLASS 311	Class	4L-T8	112	ZZ DD	9	RF 2LR[T8-2-32-IS-SP]	54	0.522	100%	1,987	1,037	$ 4.5349	$ 0.0615	$ 66.16
54	MP High School	CLASS 311	Class	2L-T8	58	ZZ DD	3	R 2L[T8-2-32-IS-LP]	51	0.021	100%	1,987	42	$ 4.5349	$ 0.0615	$ 2.66
55	MP High School	CLASS 313	Class	4L-T8	112	ZZ DD	9	RF 2LR[T8-2-32-IS-SP]	54	0.522	100%	1,987	1,037	$ 4.5349	$ 0.0615	$ 66.16
56	MP High School	CLASS 313	Class	2L-T8	58	ZZ DD	3	R 2L[T8-2-32-IS-LP]	51	0.021	100%	1,987	42	$ 4.5349	$ 0.0615	$ 2.66
57	MP High School	COMPUTER LAB 316	Class	3L-T8	85	ZZ DD	14	RF 2LR[T8-2-32-IS-SP]	54	0.434	100%	1,987	862	$ 4.5349	$ 0.0615	$ 55.01
58	MP High School	COMPUTER LAB 319	Class	3L-T8	85	ZZ DD	14	RF 2LR[T8-2-32-IS-SP]	54	0.434	100%	1,987	862	$ 4.5349	$ 0.0615	$ 55.01
59	MP High School	OFFICE / SERVER	Offices, Private	3L-T8	85	ZZ DD	1	RF 2LR[T8-2-32-IS-SP]	54	0.016	50%	1,440	45	$ 4.5349	$ 0.0615	$ 2.82
60	MP High School	ELECTRIC ROOM	Mechanical	3L-T8	85	ZZ DD	1	RF 2LR[T8-2-32-IS-SP]	54	0.003	10%	540	17	$ 4.5349	$ 0.0615	$ 1.04
61	MP High School	CUSTODIAL	Custodial	3L-T8	85	ZZ DD	1	RF 2LR[T8-2-32-IS-SP]	54	0.009	30%	540	17	$ 4.5349	$ 0.0615	$ 1.07
62	MP High School	HALL 400	Halls High School	2L-T8	58	ZZ DD	14	R 2L[T8-2-32-IS-LP]	51	0.098	100%	4,163	408	$ 4.5349	$ 0.0615	$ 25.54
63	MP High School	COMMON / CAFETERIA	Halls High School	3L-T8	85	ZZ DD	1	RF 2LR[T8-2-32-IS-SP]	54	0.031	100%	4,163	129	$ 4.5349	$ 0.0615	$ 8.08
64	MP High School	COMMON / CAFETERIA	Halls High School	3L-T8	85	ZZ DD	17	RF 2LR[T8-2-32-IS-SP]	54	0.527	100%	4,163	2,194	$ 4.5349	$ 0.0615	$ 137.33
65	MP High School	AUTO SHOP	Storage	3L-T8	85	ZZ DD	12	RF 2LR[T8-2-32-IS-SP]	54	0.372	100%	2,250	837	$ 4.5349	$ 0.0615	$ 53.17

ID#	Facility	Area	Room Type	Exist Fixture Type	Ex. Watts	Original Scope Prop. Fixt. Type	Fixt Qty	RTS Prop. Fixt. Type	Prop. Watts	kW Saved	kW Div Factor	Hours	kWh Saved	kW Rate	kWh Rate	Total Savings
66	EG Middle School	CUSTODIAL	Custodial	2L-T8	58	ZZ DD	1	R 2L[T8-2-32-IS-LP]	51	0.002	30%	750	5	$ 4.5349	$ 0.0615	$ 0.33
67	EG Middle School	BOYS LOCKER ROOM	Class	2L-T8	58	ZZ DD	3	R 2L[T8-2-32-IS-LP]	51	0.021	100%	2,733	57	$ 4.5349	$ 0.0615	$ 3.63
68	EG Middle School	GIRLS LOCKER ROOM	Class	2L-T8	58	ZZ DD	3	R 2L[T8-2-32-IS-LP]	51	0.021	100%	2,733	57	$ 4.5349	$ 0.0615	$ 3.63
69	EG Middle School	MECH	Mechanical	2L-T8	58	ZZ DD	9	R 2L[T8-2-32-IS-LP]	51	0.006	10%	520	33	$ 4.5349	$ 0.0615	$ 2.04
70	EG Middle School	CLINIC	Common Admin	3L-T8	85	ZZ DD	6	RF 2LR[T8-2-32-IS-SP]	54	0.186	100%	2,250	419	$ 4.5349	$ 0.0615	$ 26.58
71	EG Middle School	CLINIC	Common Admin	2L-T8	58	ZZ DD	1	R 2L[T8-2-32-IS-LP]	51	0.007	100%	2,250	16	$ 4.5349	$ 0.0615	$ 1.00
72	EG Middle School	RRS	Private RR	2L-T8	58	ZZ DD	2	R 2L[T8-2-32-IS-LP]	51	0.001	10%	540	8	$ 4.5349	$ 0.0615	$ 0.47
73	EG Middle School	COUNSELING RECORDS	Supply	2L-T8	58	ZZ DD	2	R 2L[T8-2-32-IS-LP]	51	0.006	40%	2,250	32	$ 4.5349	$ 0.0615	$ 1.96
74	EG Middle School	ELEVATOR ROOM	Mechanical	2L-T8	58	ZZ DD	1	R 2L[T8-2-32-IS-LP]	51	0.001	10%	540	4	$ 4.5349	$ 0.0615	$ 0.24
75	EG Middle School	ART CLASS 111	Class	3L-T8	85	ZZ DD	16	RF 2LR[T8-2-32-IS-SP]	54	0.496	100%	2,365	1,173	$ 4.5349	$ 0.0615	$ 74.40
76	EG Middle School	ELECTRIC ROOM	Mechanical	2L-T8	58	ZZ DD	1	R 2L[T8-2-32-IS-LP]	51	0.001	10%	540	4	$ 4.5349	$ 0.0615	$ 0.24
77	EG Middle School	PROJECT ROOM	Storage	3LDS-T8	85	ZZ DD	4	RF 2LR[T8-2-32-IS-SP]	54	0.025	20%	540	67	$ 4.5349	$ 0.0615	$ 4.23
78	EG Middle School	TECH LAB 130	Class	2L-T8	58	ZZ DD	2	R 2L[T8-2-32-IS-LP]	51	0.014	100%	2,365	33	$ 4.5349	$ 0.0615	$ 2.10
79	EG Middle School	CUSTODIAL	Custodial	2L-T8	58	ZZ DD	1	R 2L[T8-2-32-IS-LP]	51	0.002	30%	750	5	$ 4.5349	$ 0.0615	$ 0.33
80	EG Middle School	STAFF RR	Private RR	2L-T8	58	ZZ DD	1	R 2L[T8-2-32-IS-LP]	51	0.001	10%	540	4	$ 4.5349	$ 0.0615	$ 0.24
81	EG Middle School	CUSTODIAL	Custodial	2L-T8	58	ZZ DD	1	R 2L[T8-2-32-IS-LP]	51	0.002	30%	750	5	$ 4.5349	$ 0.0615	$ 0.33
82	EG Middle School	STAFF RR	Private RR	2L-T8	58	ZZ DD	1	R 2L[T8-2-32-IS-LP]	51	0.001	10%	540	4	$ 4.5349	$ 0.0615	$ 0.24
83	EG Middle School	MECH ROOM	Mechanical	2L-T8	58	ZZ DD	10	R 2L[T8-2-32-IS-LP]	51	0.007	10%	540	38	$ 4.5349	$ 0.0615	$ 2.36
84	EG Middle School	CLASS 213	Class	3L2'-T8	45	ZZ DD	3	RF 2LR2'[T8-2-32-IS-SP]	30	0.045	100%	2,365	106	$ 4.5349	$ 0.0615	$ 6.75
85	EG Middle School	CLASS 214	Class	3L2'-T8	45	ZZ DD	2	RF 2LR2'[T8-2-32-IS-SP]	30	0.030	100%	2,365	71	$ 4.5349	$ 0.0615	$ 4.50
86	EG Middle School	CLASS 215	Class	3L2'-T8	45	ZZ DD	2	RF 2LR2'[T8-2-32-IS-SP]	30	0.030	100%	2,365	71	$ 4.5349	$ 0.0615	$ 4.50
87	EG Middle School	CLASS 216	Class	3L2'-T8	45	ZZ DD	2	RF 2LR2'[T8-2-32-IS-SP]	30	0.030	100%	2,365	71	$ 4.5349	$ 0.0615	$ 4.50
88	EG Middle School	CUSTODIAL / MECH	Custodial	2L-T8	58	ZZ DD	9	R 2L[T8-2-32-IS-LP]	51	0.006	10%	540	34	$ 4.5349	$ 0.0615	$ 2.12
89	EG Middle School	STAFF RR	Private RR	2L-T8	58	ZZ DD	1	R 2L[T8-2-32-IS-LP]	51	0.002	30%	750	5	$ 4.5349	$ 0.0615	$ 0.33

ID#	Facility	Area	Room Type	Exist Fixture Type	Ex. Watts	Original Scope Prop. Fixt. Type	Fixt Qty	RTS Prop. Fixt. Type	Prop. Watts	kW Saved	kW Div Factor	Hours	kWh Saved	kW Rate	kWh Rate	Total Savings
90	Granby ES	CLASS 130	Class	3LDS-T8	85	ZZ DD	13	RF 2LR[T8-2-32-IS-SP]	54	0.403	100%	2,455	989	$ 4.5349	$ 0.0688	$ 69.90
91	Granby ES	CLASS 129	Class	3LDS-T8	85	ZZ DD	13	RF 2LR[T8-2-32-IS-SP]	54	0.403	100%	2,455	989	$ 4.5349	$ 0.0688	$ 69.90
92	Granby ES	COMPUTER LAB 128	Class	3LDS-T8	85	ZZ DD	10	RF 2LR[T8-2-32-IS-SP]	54	0.310	100%	2,455	761	$ 4.5349	$ 0.0688	$ 53.77
93	Granby ES	CLASS 139	Class	3LDS-T8	85	ZZ DD	13	RF 2LR[T8-2-32-IS-SP]	54	0.403	100%	2,455	989	$ 4.5349	$ 0.0688	$ 69.90
94	Granby ES	CLASS 138	Class	3LDS-T8	85	ZZ DD	13	RF 2LR[T8-2-32-IS-SP]	54	0.403	100%	2,455	989	$ 4.5349	$ 0.0688	$ 69.90
95	Granby ES	CLASS 137	Class	3LDS-T8	85	ZZ DD	15	RF 2LR[T8-2-32-IS-SP]	54	0.465	100%	2,455	1,142	$ 4.5349	$ 0.0688	$ 80.65
96	Granby ES	CLASS 136	Class	3LDS-T8	85	ZZ DD	15	RF 2LR[T8-2-32-IS-SP]	54	0.465	100%	2,455	1,142	$ 4.5349	$ 0.0688	$ 80.65
97	Granby ES	MEDIA 124	Library	3L-T8	85	ZZ DD	8	RF 2LR[T8-2-32-IS-SP]	54	0.223	90%	2,000	496	$ 4.5349	$ 0.0688	$ 35.14
98	Granby ES	MEDIA 124	Library	3L-T8	85	ZZ DD	36	RF 2LR[T8-2-32-IS-SP]	54	1.004	90%	2,000	2,232	$ 4.5349	$ 0.0688	$ 158.13
99	Granby ES	MEDIA SUPPLY 123	Supply	3LDS-T8	85	ZZ DD	9	RF 2LR[T8-2-32-IS-SP]	54	0.112	40%	1,680	469	$ 4.5349	$ 0.0688	$ 32.76
100	Granby ES	MEDIA OFFICE 125	Offices, Private	3LDS-T8	85	ZZ DD	4	RF 2LR[T8-2-32-IS-SP]	54	0.062	50%	2,271	282	$ 4.5349	$ 0.0688	$ 19.66
101	Granby ES	WORK ROOM 126	Offices, Private	3LDS-T8	85	ZZ DD	3	RF 2LR[T8-2-32-IS-SP]	54	0.047	50%	2,271	211	$ 4.5349	$ 0.0688	$ 14.74
102	Granby ES	RRS	Common RR	2L-T8	58	ZZ DD	8	R 2L[T8-2-32-IS-LP]	51	0.056	100%	3,646	204	$ 4.5349	$ 0.0688	$ 14.30
103	Granby ES	RESOURCE 117	Class	3LDS-T8	85	ZZ DD	7	RF 2LR[T8-2-32-IS-SP]	54	0.217	100%	2,455	533	$ 4.5349	$ 0.0688	$ 37.64
104	Granby ES	SUPPLY 118	Supply	3L-T8	85	ZZ DD	2	RF 2LR[T8-2-32-IS-SP]	54	0.025	40%	1,680	104	$ 4.5349	$ 0.0688	$ 7.28
105	Granby ES	CLASS 119	Class	3L-T8	85	ZZ DD	2	RF 2LR[T8-2-32-IS-SP]	54	0.062	100%	2,455	152	$ 4.5349	$ 0.0688	$ 10.75
106	Granby ES	OFFICE 120	Offices, Private	3L-T8	85	ZZ DD	2	RF 2LR[T8-2-32-IS-SP]	54	0.031	50%	2,271	141	$ 4.5349	$ 0.0688	$ 9.83
107	Granby ES	OFFICE 116	Offices, Private	3L-T8	85	ZZ DD	2	RF 2LR[T8-2-32-IS-SP]	54	0.031	50%	2,271	141	$ 4.5349	$ 0.0688	$ 9.83
108	Granby ES	OFFICE 115	Offices, Private	3L-T8	85	ZZ DD	2	RF 2LR[T8-2-32-IS-SP]	54	0.031	50%	2,271	141	$ 4.5349	$ 0.0688	$ 9.83
109	Granby ES	OFFICE 114	Offices, Private	3L-T8	85	ZZ DD	2	RF 2LR[T8-2-32-IS-SP]	54	0.031	50%	2,271	141	$ 4.5349	$ 0.0688	$ 9.83
110	Granby ES	WOMENS STAFF RR 111	Private RR	2L-T8	58	ZZ DD	1	R 2L[T8-2-32-IS-LP]	51	0.001	10%	540	4	$ 4.5349	$ 0.0688	$ 0.26
111	Granby ES	MENS STAFF RR 110	Private RR	2L-T8	58	ZZ DD	1	R 2L[T8-2-32-IS-LP]	51	0.001	10%	540	4	$ 4.5349	$ 0.0688	$ 0.26
112	Granby ES	LAUNDRY 105	Custodial	2L-T8	58	ZZ DD	2	R 2L[T8-2-32-IS-LP]	51	0.004	30%	750	11	$ 4.5349	$ 0.0688	$ 0.74
113	Granby ES	ELECTRIC ROOM	Mechanical	2L-T8	58	ZZ DD	1	R 2L[T8-2-32-IS-LP]	51	0.001	10%	540	4	$ 4.5349	$ 0.0688	$ 0.26
114	Granby ES	CUSTODIAL 107	Custodial	2L-T8	58	ZZ DD	1	R 2L[T8-2-32-IS-LP]	51	0.001	10%	750	5	$ 4.5349	$ 0.0688	$ 0.36
115	Granby ES	CLASS 101	Class	3LDS-T8	85	ZZ DD	15	RF 2LR[T8-2-32-IS-SP]	54	0.465	100%	2,455	1,142	$ 4.5349	$ 0.0688	$ 80.65
116	Granby ES	CLASS 102	Class	3LDS-T8	85	ZZ DD	15	RF 2LR[T8-2-32-IS-SP]	54	0.465	100%	2,455	1,142	$ 4.5349	$ 0.0688	$ 80.65
117	Granby ES	CLASS 103	Class	3LDS-T8	85	ZZ DD	15	RF 2LR[T8-2-32-IS-SP]	54	0.465	100%	2,455	1,142	$ 4.5349	$ 0.0688	$ 80.65
118	Granby ES	CLASS 104	Class	3LDS-T8	85	ZZ DD	15	RF 2LR[T8-2-32-IS-SP]	54	0.465	100%	2,455	1,142	$ 4.5349	$ 0.0688	$ 80.65
119	Granby ES	TITLE 1	Class	3L-T8	85	ZZ DD	4	RF 2LR[T8-2-32-IS-SP]	54	0.124	100%	2,455	304	$ 4.5349	$ 0.0688	$ 21.51
120	Granby ES	3RD GRADE	Class	3L-T8	85	ZZ DD	9	RF 2LR[T8-2-32-IS-SP]	54	0.279	100%	2,455	685	$ 4.5349	$ 0.0688	$ 48.39
121	Granby ES	TITLE 1	Class	3L-T8	85	ZZ DD	4	RF 2LR[T8-2-32-IS-SP]	54	0.124	100%	2,455	304	$ 4.5349	$ 0.0688	$ 21.51
122	Granby ES	3RD GRADE	Class	3L-T8	85	ZZ DD	9	RF 2LR[T8-2-32-IS-SP]	54	0.279	100%	2,455	685	$ 4.5349	$ 0.0688	$ 48.39
123	Granby ES	MAIN OFFICE	Common Admin	3L-T8	85	ZZ DD	4	RF 2LR[T8-2-32-IS-SP]	54	0.124	100%	3,646	452	$ 4.5349	$ 0.0688	$ 31.67
124	Granby ES	OFFICE CORRIDORS	Common Admin	3L-T8	85	ZZ DD	3	RF 2LR[T8-2-32-IS-SP]	54	0.093	100%	3,646	339	$ 4.5349	$ 0.0688	$ 23.75
125	Granby ES	NURSE	Common Admin	3L-T8	85	ZZ DD	2	RF 2LR[T8-2-32-IS-SP]	54	0.062	100%	3,646	226	$ 4.5349	$ 0.0688	$ 15.83
126	Granby ES	NURSE RR	Private RR	3L-T8	85	ZZ DD	1	RF 2LR[T8-2-32-IS-SP]	54	0.003	10%	540	17	$ 4.5349	$ 0.0688	$ 1.17
127	Granby ES	PRINCIPAL OFFICE	Offices, Private	4L-T8	112	ZZ DD	2	RF 2LR[T8-2-32-IS-SP]	54	0.058	50%	2,271	263	$ 4.5349	$ 0.0688	$ 18.39
128	Granby ES	CONFERENCE ROOM	Conference	4L-T8	112	ZZ DD	4	RF 2LR[T8-2-32-IS-SP]	54	0.093	40%	840	195	$ 4.5349	$ 0.0688	$ 13.83
129	Granby ES	CAFETERIA	Halls Middle & Elem	2L-T8	58	ZZ DD	34	R 2L[T8-2-32-IS-LP]	51	0.238	100%	3,646	868	$ 4.5349	$ 0.0688	$ 60.78
130	Granby ES	KITCHEN	Kitchen	2L-T8	58	ZZ DD	12	R 2L[T8-2-32-IS-LP]	51	0.084	100%	800	67	$ 4.5349	$ 0.0688	$ 5.00
131	Granby ES	ART	Class	4L-T8	112	ZZ DD	14	RF 2LR[T8-2-32-IS-SP]	54	0.812	100%	2,455	1,993	$ 4.5349	$ 0.0688	$ 140.84
132	Granby ES	GYM STORAGE	Storage	2L-T8	58	ZZ DD	1	R 2L[T8-2-32-IS-LP]	51	0.001	20%	540	4	$ 4.5349	$ 0.0688	$ 0.27
133	Granby ES	EQUIP STORAGE	Storage	2L-T8	58	ZZ DD	4	R 2L[T8-2-32-IS-LP]	51	0.006	20%	540	15	$ 4.5349	$ 0.0688	$ 1.07
134	Granby ES	WORK ROOM 125	Offices, Private	2L-T8	58	ZZ DD	2	R 2L[T8-2-32-IS-LP]	51	0.007	50%	2,271	32	$ 4.5349	$ 0.0688	$ 2.22
135	Granby ES	CLASS 301	Class	3L-T8	85	ZZ DD	7	RF 2LR[T8-2-32-IS-SP]	54	0.217	100%	2,455	533	$ 4.5349	$ 0.0688	$ 37.64
136	Granby ES	RR	Private RR	2L-T8	58	ZZ DD	1	R 2L[T8-2-32-IS-LP]	51	0.001	10%	540	4	$ 4.5349	$ 0.0688	$ 0.26
137	Granby ES	OFFICE	Offices, Private	3L-T8	85	ZZ DD	2	RF 2LR[T8-2-32-IS-SP]	54	0.031	50%	2,271	141	$ 4.5349	$ 0.0688	$ 9.83
138	Granby ES	CLASS 303	Class	3L-T8	85	ZZ DD	7	RF 2LR[T8-2-32-IS-SP]	54	0.217	100%	2,455	533	$ 4.5349	$ 0.0688	$ 37.64
139	Granby ES	CLASS 305	Class	3L-T8	85	ZZ DD	12	RF 2LR[T8-2-32-IS-SP]	54	0.372	100%	2,455	913	$ 4.5349	$ 0.0688	$ 64.52
140	Granby ES	RR	Private RR	2L-T8	58	ZZ DD	1	R 2L[T8-2-32-IS-LP]	51	0.001	10%	540	4	$ 4.5349	$ 0.0688	$ 0.26
141	Granby ES	CLASS 307	Class	3L-T8	85	ZZ DD	12	RF 2LR[T8-2-32-IS-SP]	54	0.372	100%	2,455	913	$ 4.5349	$ 0.0688	$ 64.52
142	Granby ES	RR	Private RR	2L-T8	58	ZZ DD	1	R 2L[T8-2-32-IS-LP]	51	0.001	10%	540	4	$ 4.5349	$ 0.0688	$ 0.26

ID#	Facility	Area	Room Type	Exist Fixture Type	Ex. Watts	Original Scope Prop. Fixt. Type	Fixt Qty	RTS Prop. Fixt. Type	Prop. Watts	kW Saved	kW Div Factor	Hours	kWh Saved	kW Rate	kWh Rate	Total Savings
143	Granby ES	CLASS 309	Class	3L-T8	85	ZZ DD	11	RF 2LR[T8-2-32-IS-SP]	54	0.341	100%	2,455	837	$ 4.5349	$ 0.0688	$ 59.15
144	Granby ES	RR	Private RR	2L-T8	58	ZZ DD	1	R 2L[T8-2-32-IS-LP]	51	0.001	10%	540	4	$ 4.5349	$ 0.0688	$ 0.26
145	Granby ES	CLASS 310	Class	3L-T8	85	ZZ DD	4	RF 2LR[T8-2-32-IS-SP]	54	0.124	100%	2,455	304	$ 4.5349	$ 0.0688	$ 21.51
146	Granby ES	CLASS 308	Class	3L-T8	85	ZZ DD	15	RF 2LR[T8-2-32-IS-SP]	54	0.465	100%	2,455	1,142	$ 4.5349	$ 0.0688	$ 80.65
147	Granby ES	RR	Private RR	2L-T8	58	ZZ DD	1	R 2L[T8-2-32-IS-LP]	51	0.001	10%	540	4	$ 4.5349	$ 0.0688	$ 0.26
148	Granby ES	CLASS 306	Class	3L-T8	85	ZZ DD	12	RF 2LR[T8-2-32-IS-SP]	54	0.372	100%	2,455	913	$ 4.5349	$ 0.0688	$ 64.52
149	Granby ES	RR	Private RR	2L-T8	58	ZZ DD	1	R 2L[T8-2-32-IS-LP]	51	0.001	10%	540	4	$ 4.5349	$ 0.0688	$ 0.26
150	Granby ES	CLASS 304	Class	3L-T8	85	ZZ DD	12	RF 2LR[T8-2-32-IS-SP]	54	0.372	100%	2,455	913	$ 4.5349	$ 0.0688	$ 64.52
151	Granby ES	RR	Private RR	2L-T8	58	ZZ DD	1	R 2L[T8-2-32-IS-LP]	51	0.001	10%	540	4	$ 4.5349	$ 0.0688	$ 0.26
152	Granby ES	CLASS 302	Class	3L-T8	85	ZZ DD	12	RF 2LR[T8-2-32-IS-SP]	54	0.372	100%	2,455	913	$ 4.5349	$ 0.0688	$ 64.52
153	Granby ES	CLASS 302	Class	2LU-T8	58	ZZ DD	3	RF 2LR2'[T8-2-32-IS-SP]	30	0.084	100%	2,455	206	$ 4.5349	$ 0.0688	$ 14.57
154	Granby ES	RR	Private RR	2L-T8	58	ZZ DD	1	R 2L[T8-2-32-IS-LP]	51	0.001	10%	540	4	$ 4.5349	$ 0.0688	$ 0.26
155	Granby ES	OFFICE 300	Offices, Private	3L-T8	85	ZZ DD	2	RF 2LR[T8-2-32-IS-SP]	54	0.031	50%	2,271	141	$ 4.5349	$ 0.0688	$ 9.83
156	Granby ES	GYM HALL	Halls Middle & Elem	2L-T8	58	ZZ DD	12	R 2L[T8-2-32-IS-LP]	51	0.084	100%	3,646	306	$ 4.5349	$ 0.0688	$ 21.45
157	Granby ES	CENTER HALL	Halls Middle & Elem	2L-T8	58	ZZ DD	7	R 2L[T8-2-32-IS-LP]	51	0.049	100%	3,646	179	$ 4.5349	$ 0.0688	$ 12.51
158	Granby ES	HALL 100	Halls Middle & Elem	2L-T8	58	ZZ DD	19	R 2L[T8-2-32-IS-LP]	51	0.133	100%	3,646	485	$ 4.5349	$ 0.0688	$ 33.97

ID#	Facility	Area	Room Type	Exist Fixture Type	Ex. Watts	Original Scope Prop. Fixt. Type	Fixt Qty	RTS Prop. Fixt. Type	Prop. Watts	kW Saved	kW Div Factor	Hours	kWh Saved	kW Rate	kWh Rate	Total Savings
159	Indian Peaks Charter	LUNCH ROOM	Kitchen	2L-T8	58	ZZ DD	12	R 2L[T8-2-32-IS-LP]	51	0.084	100%	1,600	134	$ -	$ 0.0907	$ 12.19
160	Indian Peaks Charter	KINDERGARTEN	Class	2L-T8	58	ZZ DD	11	R 2L[T8-2-32-IS-LP]	51	0.077	100%	1,600	123	$ -	$ 0.0907	$ 11.17
161	Indian Peaks Charter	1ST & 2ND GRADE	Class	2L-T8	58	ZZ DD	12	R 2L[T8-2-32-IS-LP]	51	0.084	100%	1,600	134	$ -	$ 0.0907	$ 12.19
162	Indian Peaks Charter	RESTROOMS	Halls Middle & Elem	2L-T8	58	ZZ DD	4	R 2L[T8-2-32-IS-LP]	51	0.028	100%	1,600	45	$ -	$ 0.0907	$ 4.06
163	Indian Peaks Charter	FOREIGN LANGUAGE	Class	2L-T8	58	ZZ DD	6	R 2L[T8-2-32-IS-LP]	51	0.042	100%	1,600	67	$ -	$ 0.0907	$ 6.09
164	Indian Peaks Charter	HALLS	Halls Middle & Elem	2L-T8	58	ZZ DD	5	R 2L[T8-2-32-IS-LP]	51	0.035	100%	1,600	56	$ -	$ 0.0907	$ 5.08
165	Indian Peaks Charter	LIBRARY (WEST MOD)	Class	2L-T8	58	ZZ DD	5	R 2L[T8-2-32-IS-LP]	51	0.035	100%	1,600	56	$ -	$ 0.0907	$ 5.08
166	Indian Peaks Charter	3RD & 4TH GRADE	Class	2L-T8	58	ZZ DD	6	R 2L[T8-2-32-IS-LP]	51	0.042	100%	1,600	67	$ -	$ 0.0907	$ 6.09
167	Indian Peaks Charter	SPECIAL ED	Class	2L-T8	58	ZZ DD	2	R 2L[T8-2-32-IS-LP]	51	0.014	100%	1,600	22	$ -	$ 0.0907	$ 2.03
168	Indian Peaks Charter	GIRLS RESTROOM	Halls Middle & Elem	2L-T8	58	ZZ DD	1	R 2L[T8-2-32-IS-LP]	51	0.007	100%	1,600	11	$ -	$ 0.0907	$ 1.02
169	Indian Peaks Charter	CORRIDOR	Halls Middle & Elem	2L-T8	58	ZZ DD	2	R 2L[T8-2-32-IS-LP]	51	0.014	100%	1,600	22	$ -	$ 0.0907	$ 2.03

ID#	Facility	Area	Room Type	Exist Fixture Type	Ex. Watts	Original Scope Prop. Fixt. Type	Fixt Qty	RTS Prop. Fixt. Type	Prop. Watts	kW Saved	kW Div Factor	Hours	kWh Saved	kW Rate	kWh Rate	Total Savings
170	District Office	CHAIMBERLIN OFFICE	Offices Admin	4L-T8	112	ZZ DD	2	RF 2LR[T8-2-32-IS-SP]	54	0.104	90%	2,000	232	$ -	$ 0.0907	$ 21.04
171	District Office	LUND OFFICE	Offices Admin	4L-T8	112	ZZ DD	1	RF 2LR[T8-2-32-IS-SP]	54	0.052	90%	2,000	116	$ -	$ 0.0907	$ 10.52
172	District Office	WENINGER OFFICE	Offices Admin	4L-T8	112	ZZ DD	2	RF 2LR[T8-2-32-IS-SP]	54	0.104	90%	2,000	232	$ -	$ 0.0907	$ 21.04
173	District Office	OFFICE	Offices Admin	4L-T8	112	ZZ DD	2	RF 2LR[T8-2-32-IS-SP]	54	0.104	90%	2,000	232	$ -	$ 0.0907	$ 21.04
174	District Office	KNOX OFFICE	Offices Admin	4L-T8	112	ZZ DD	2	RF 2LR[T8-2-32-IS-SP]	54	0.104	90%	2,000	232	$ -	$ 0.0907	$ 21.04
175	District Office	WORK ROOM	Offices Admin	4L-T8	112	ZZ DD	2	RF 2LR[T8-2-32-IS-SP]	54	0.104	90%	2,000	232	$ -	$ 0.0907	$ 21.04
176	District Office	BOARD ROOM	Conference	4L-T8	112	ZZ DD	15	RF 2LR[T8-2-32-IS-SP]	54	0.348	40%	120	104	$ -	$ 0.0907	$ 9.47
177	District Office	MENS RESTROOM	Common RR	2L-T8	58	ZZ DD	1	R 2L[T8-2-32-IS-LP]	51	0.007	100%	760	5	$ -	$ 0.0907	$ 0.48
178	District Office	WOMENS RESTROOM	Common RR	2L-T8	58	ZZ DD	1	R 2L[T8-2-32-IS-LP]	51	0.007	100%	760	5	$ -	$ 0.0907	$ 0.48
179	District Office	WOMENS RESTROOM	Common RR	2L-T8	58	ZZ DD	1	R 2L[T8-2-32-IS-LP]	51	0.007	100%	760	5	$ -	$ 0.0907	$ 0.48
180	District Office	FILE STORAGE	Storage	4L-T8	112	ZZ DD	6	RF 2LR[T8-2-32-IS-SP]	54	0.070	20%	540	188	$ -	$ 0.0907	$ 17.04
181	District Office	MAINT SHOP	Offices Admin	4L-T8	112	ZZ DD	2	RF 2LR[T8-2-32-IS-SP]	54	0.104	90%	2,200	255	$ -	$ 0.0907	$ 23.15

ID#	Facility	Area	Room Type	Exist Fixture Type	Ex. Watts	Original Scope Prop. Fixt. Type	Fixt Qty	RTS Prop. Fixt. Type	Prop. Watts	kW Saved	kW Div Factor	Hours	kWh Saved	kW Rate	kWh Rate	Total Savings
182	Transportation	DRIVER LOUNGE	Common Admin	2L-T8	58	ZZ DD	4	R 2L[T8-2-32-IS-LP]	51	0.028	100%	2,200	62	$ -	$ 0.0907	$ 5.59
183	Transportation	DRIVER LOUNGE	EM/Night	2L-T8	58	ZZ DD	1	R 2L[T8-2-32-IS-LP]	51	0.007	100%	8,760	61	$ -	$ 0.0907	$ 5.56
184	Transportation	RRS	Private RR	2L-T8	58	ZZ DD	2	R 2L[T8-2-32-IS-LP]	51	0.001	10%	540	8	$ -	$ 0.0907	$ 0.69
189	Transportation	SHOP OFFICE	Offices, Private	3L-T8	85	ZZ DD	2	RF 2LR[T8-2-32-IS-SP]	54	0.031	50%	2,200	136	$ -	$ 0.0907	$ 12.37
190	Transportation	PARTS ROOM	Common Admin	4L-T8	112	ZZ DD	4	RF 2LR[T8-2-32-IS-SP]	54	0.232	100%	2,200	510	$ -	$ 0.0907	$ 46.29
191	Transportation	MEZZANINE CLASS	Storage	4L-T8	112	ZZ DD	8	RF 2LR[T8-2-32-IS-SP]	54	0.093	20%	540	251	$ -	$ 0.0907	$ 22.73
192	Transportation	WASH BAY	Common Admin	4L-T8	112	ZZ DD	8	RF 2LR[T8-2-32-IS-SP]	54	0.464	100%	2,200	1,021	$ -	$ 0.0907	$ 92.58

ID#	Facility	Area	Room Type	Exist Fixture Type	Ex. Watts	Original Scope Prop. Fixt. Type	Fixt Qty	RTS Prop. Fixt. Type	Prop. Watts	kW Saved	kW Div Factor	Hours	kWh Saved	kW Rate	kWh Rate	Total Savings
193	Grand Lake ES	NURSE	Common Admin	4L-T8	112	ZZ DD	3	RF 2LR[T8-2-32-IS-SP]	54	0.174	100%	2,271	395	$ 4.5349	$ 0.0803	$ 32.51
194	Grand Lake ES	CONFERENCE ROOM	Conference	4L-T8	112	ZZ DD	4	RF 2LR[T8-2-32-IS-SP]	54	0.093	40%	840	195	$ 4.5349	$ 0.0803	$ 16.06
195	Grand Lake ES	ART ROOM	Class	4L-T8	112	ZZ DD	12	RF 2LR[T8-2-32-IS-SP]	54	0.696	100%	2,455	1,709	$ 4.5349	$ 0.0803	$ 140.32
196	Grand Lake ES	MEDIA CENTER	Library	4L-T8	112	ZZ DD	10	RF 2LR[T8-2-32-IS-SP]	54	0.522	90%	2,000	1,160	$ 4.5349	$ 0.0803	$ 95.48
197	Grand Lake ES	MEDIA CENTER	Library	2L-T8	58	ZZ DD	2	R 2L[T8-2-32-IS-LP]	51	0.013	90%	2,000	28	$ 4.5349	$ 0.0803	$ 2.30
198	Grand Lake ES	KITCHEN	Kitchen	2L-T8	58	ZZ DD	10	R 2L[T8-2-32-IS-LP]	51	0.070	100%	800	56	$ 4.5349	$ 0.0803	$ 4.81

ID#	Facility	Area	Room Type	Exist Fixture Type	Ex. Watts	Original Scope Prop. Fixt. Type	Fixt Qty	RTS Prop. Fixt. Type	Prop. Watts	kW Saved	kW Div Factor	Hours	kWh Saved	kW Rate	kWh Rate	Total Savings
199	Fraser Valley ES	NURSE	Offices Admin	4L-T8	112	ZZ DD	3	RF 2LR[T8-2-32-IS-SP]	54	0.157	90%	2,271	395	$ 4.5349	$ 0.0594	$ 24.19
200	Fraser Valley ES	CONFERENCE ROOM	Conference	4L-T8	112	ZZ DD	4	RF 2LR[T8-2-32-IS-SP]	54	0.093	40%	840	195	$ 4.5349	$ 0.0594	$ 12.00
201	Fraser Valley ES	ART ROOM	Class	4L-T8	112	ZZ DD	12	RF 2LR[T8-2-32-IS-SP]	54	0.696	100%	2,365	1,646	$ 4.5349	$ 0.0594	$ 100.97
202	Fraser Valley ES	ART STORAGE	Storage	3L-T8	85	ZZ DD	2	RF 2LR[T8-2-32-IS-SP]	54	0.012	20%	540	33	$ 4.5349	$ 0.0594	$ 2.05
203	Fraser Valley ES	CLASS 173	Class	3L-T8	85	ZZ DD	12	RF 2LR[T8-2-32-IS-SP]	54	0.372	100%	2,365	880	$ 4.5349	$ 0.0594	$ 53.97
204	Fraser Valley ES	CLASS 173 RR	Private RR	2L-T8	58	ZZ DD	1	R 2L[T8-2-32-IS-LP]	51	0.001	10%	540	4	$ 4.5349	$ 0.0594	$ 0.23
205	Fraser Valley ES	CLASS 176	Class	3L-T8	85	ZZ DD	12	RF 2LR[T8-2-32-IS-SP]	54	0.372	100%	2,365	880	$ 4.5349	$ 0.0594	$ 53.97
206	Fraser Valley ES	CLASS 176 RR	Private RR	2L-T8	58	ZZ DD	1	R 2L[T8-2-32-IS-LP]	51	0.001	10%	540	4	$ 4.5349	$ 0.0594	$ 0.23
207	Fraser Valley ES	CLASS 178	Class	3L-T8	85	ZZ DD	12	RF 2LR[T8-2-32-IS-SP]	54	0.372	100%	2,365	880	$ 4.5349	$ 0.0594	$ 53.97
208	Fraser Valley ES	CLASS 178 RR	Private RR	2L-T8	58	ZZ DD	1	R 2L[T8-2-32-IS-LP]	51	0.001	10%	540	4	$ 4.5349	$ 0.0594	$ 0.23
209	Fraser Valley ES	CLASS 183	Class	3L-T8	85	ZZ DD	12	RF 2LR[T8-2-32-IS-SP]	54	0.372	100%	2,365	880	$ 4.5349	$ 0.0594	$ 53.97
210	Fraser Valley ES	CLASS 183 RR	Private RR	2L-T8	58	ZZ DD	1	R 2L[T8-2-32-IS-LP]	51	0.001	10%	540	4	$ 4.5349	$ 0.0594	$ 0.23
211	Fraser Valley ES	CLASS 185	Class	3L-T8	85	ZZ DD	12	RF 2LR[T8-2-32-IS-SP]	54	0.372	100%	2,365	880	$ 4.5349	$ 0.0594	$ 53.97
212	Fraser Valley ES	CLASS 185 RR	Private RR	2L-T8	58	ZZ DD	1	R 2L[T8-2-32-IS-LP]	51	0.001	10%	540	4	$ 4.5349	$ 0.0594	$ 0.23
213	Fraser Valley ES	CLASS 188	Class	3L-T8	85	ZZ DD	12	RF 2LR[T8-2-32-IS-SP]	54	0.372	100%	2,365	880	$ 4.5349	$ 0.0594	$ 53.97
214	Fraser Valley ES	CLASS 188 RR	Private RR	2L-T8	58	ZZ DD	1	R 2L[T8-2-32-IS-LP]	51	0.001	10%	540	4	$ 4.5349	$ 0.0594	$ 0.23
215	Fraser Valley ES	MECH / MAINT	Mechanical	4L-T8	112	ZZ DD	3	RF 2LR[T8-2-32-IS-SP]	54	0.017	10%	540	94	$ 4.5349	$ 0.0594	$ 5.66
216	Fraser Valley ES	CLASS 110	Class	4L-T8	112	ZZ DD	10	RF 2LR[T8-2-32-IS-SP]	54	0.580	100%	2,365	1,372	$ 4.5349	$ 0.0594	$ 84.14
217	Fraser Valley ES	CLASS 110	Class	2L-T8	58	ZZ DD	2	R 2L[T8-2-32-IS-LP]	51	0.014	100%	2,365	33	$ 4.5349	$ 0.0594	$ 2.03
218	Fraser Valley ES	KITCHEN	Kitchen	2L-T8	58	ZZ DD	10	R 2L[T8-2-32-IS-LP]	51	0.070	100%	800	56	$ 4.5349	$ 0.0594	$ 3.65
219	Fraser Valley ES	MUSIC 195	Class	3L-T8	85	ZZ DD	16	RF 2LR[T8-2-32-IS-SP]	54	0.496	100%	2,365	1,173	$ 4.5349	$ 0.0594	$ 71.95
220	Fraser Valley ES	MUSIC 195	Class	3L2'-T8	45	ZZ DD	2	RF 2LR2'[T8-2-32-IS-SP]	30	0.030	100%	2,365	71	$ 4.5349	$ 0.0594	$ 4.35
221	Fraser Valley ES	CLASS 102	Class	3L-T8	85	ZZ DD	12	RF 2LR[T8-2-32-IS-SP]	54	0.372	100%	2,365	880	$ 4.5349	$ 0.0594	$ 53.97
222	Fraser Valley ES	CLASS 103	Class	3L-T8	85	ZZ DD	12	RF 2LR[T8-2-32-IS-SP]	54	0.372	100%	2,365	880	$ 4.5349	$ 0.0594	$ 53.97
223	Fraser Valley ES	CLASS 104	Class	3L-T8	85	ZZ DD	12	RF 2LR[T8-2-32-IS-SP]	54	0.372	100%	2,365	880	$ 4.5349	$ 0.0594	$ 53.97
224	Fraser Valley ES	CLASS 105	Class	3L-T8	85	ZZ DD	12	RF 2LR[T8-2-32-IS-SP]	54	0.372	100%	2,365	880	$ 4.5349	$ 0.0594	$ 53.97
225	Fraser Valley ES	CLASS 120	Class	3L-T8	85	ZZ DD	12	RF 2LR[T8-2-32-IS-SP]	54	0.372	100%	2,365	880	$ 4.5349	$ 0.0594	$ 53.97
226	Fraser Valley ES	CLASS 101	Class	3L-T8	85	ZZ DD	12	RF 2LR[T8-2-32-IS-SP]	54	0.372	100%	2,365	880	$ 4.5349	$ 0.0594	$ 53.97
227	Fraser Valley ES	GYM STORAGE	Storage	2L-T8	58	ZZ DD	4	R 2L[T8-2-32-IS-LP]	51	0.006	20%	540	15	$ 4.5349	$ 0.0594	$ 0.92
228	Fraser Valley ES	WATER RISER	Mechanical	2L-T8	58	ZZ DD	1	R 2L[T8-2-32-IS-LP]	51	0.001	10%	540	4	$ 4.5349	$ 0.0594	$ 0.23
229	Fraser Valley ES	SHOWER	Storage	2L-T8	58	ZZ DD	1	R 2L[T8-2-32-IS-LP]	51	0.001	20%	540	4	$ 4.5349	$ 0.0594	$ 0.23
230	Fraser Valley ES	GIRLS RESTROOM	Halls Middle & Elem	2L-T8	58	ZZ DD	3	R 2L[T8-2-32-IS-LP]	51	0.021	100%	3,646	77	$ 4.5349	$ 0.0594	$ 4.64
231	Fraser Valley ES	BOYS RESTROOM	Halls Middle & Elem	2L-T8	58	ZZ DD	3	R 2L[T8-2-32-IS-LP]	51	0.021	100%	3,646	77	$ 4.5349	$ 0.0594	$ 4.64
232	Fraser Valley ES	CUSTODIAL	Custodial	2L-T8	58	ZZ DD	1	R 2L[T8-2-32-IS-LP]	51	0.002	30%	750	5	$ 4.5349	$ 0.0594	$ 0.32
233	Fraser Valley ES	MEDIA CENTER	EM/Night	4L-T8	112	ZZ DD	6	RF 2LR[T8-2-32-IS-SP]	54	0.348	100%	8,760	3,048	$ 4.5349	$ 0.0594	$ 182.73
234	Fraser Valley ES	MEDIA CENTER	EM/Night	2L-T8	58	ZZ DD	3	R 2L[T8-2-32-IS-LP]	51	0.021	100%	8,760	184	$ 4.5349	$ 0.0594	$ 11.03
235	Fraser Valley ES	MEDIA CENTER	Library	4L-T8	112	ZZ DD	4	RF 2LR[T8-2-32-IS-SP]	54	0.209	90%	2,000	464	$ 4.5349	$ 0.0594	$ 28.52
236	Fraser Valley ES	MEDIA CENTER	Library	2L-T8	58	ZZ DD	2	R 2L[T8-2-32-IS-LP]	51	0.013	90%	2,000	28	$ 4.5349	$ 0.0594	$ 1.72
237	Fraser Valley ES	COMPUTER LAB	Class	3L-T8	85	ZZ DD	12	RF 2LR[T8-2-32-IS-SP]	54	0.372	100%	2,365	880	$ 4.5349	$ 0.0594	$ 53.97
238	Fraser Valley ES	PENTHOUSE MECH	Mechanical	2L-T8	58	ZZ DD	8	R 2L[T8-2-32-IS-LP]	51	0.006	10%	540	30	$ 4.5349	$ 0.0594	$ 1.82
239	Fraser Valley ES	ELECTRICAL ROOM	Mechanical	2L-T8	58	ZZ DD	1	R 2L[T8-2-32-IS-LP]	51	0.001	10%	540	4	$ 4.5349	$ 0.0594	$ 0.23
240	Fraser Valley ES	STORAGE	Storage	2L-T8	58	ZZ DD	1	R 2L[T8-2-32-IS-LP]	51	0.001	20%	540	4	$ 4.5349	$ 0.0594	$ 0.23
241	Fraser Valley ES	HALL SOUTH	Halls Middle & Elem	2L-T8	58	ZZ DD	20	R 2L[T8-2-32-IS-LP]	51	0.140	100%	3,646	510	$ 4.5349	$ 0.0594	$ 30.97
242	Fraser Valley ES	PE HALL	Halls Middle & Elem	2L-T8	58	ZZ DD	5	R 2L[T8-2-32-IS-LP]	51	0.035	100%	3,646	128	$ 4.5349	$ 0.0594	$ 7.74
243	Fraser Valley ES	MODULAR CLASS / STOR	Storage	4L-T8	112	ZZ DD	12	RF 2LR[T8-2-32-IS-SP]	54	0.139	20%	540	376	$ 4.5349	$ 0.0594	$ 22.96

ECM 6.1 - Window & Door Weatherization

Audit Year 2

The following tables give the total perimeter of the original building construction windows and exterior doors and a calculation of the air infiltration area sealed at the facilities covered by this ECM. Table 1 assumes the average door infiltration crack is 1/8" on approximately 33% of the total perimeter, and the average window crack is 1/32" on approximately 33% of the old windows based on survey & as-built data. Table 2 shows the resulting energy and cost avoidance/savings based on the background information and formulas that follow the tables.

Table 1 - Window & Door Weatherization Calculation Data

Facility	North/South Door Perimeter (inches)	North/South Window Perimeter (inches)	East/West Door Perimeter (inches)	East/West Window Perimeter (inches)	h Infiltration Reduction $(inches)^2$	East/West Infiltration Reduction $(inches)^2$
Middle Park High	5,868	3,660	5,484	3,420	280.0	261.0
Fraser Valley Elementary	1,980	1,584	4,140	3,312	98.0	206.0
Granby Elementary	2,784	6,746	1,188	4,498	186.0	96.0
Grand Lake Elementary	2,232	5,424	636	1,356	149.0	40.0
Indian Peaks Charter	-	238	876	482	2.5	41.5
District Office	1,356	576	-	864	662.0	9.0

Table 2 - All Buildings Combined - Annual Energy Cost Avoidance/Savings

	Electricity					
	Consumption (kWh)	Demand (kW)	Gas (MMBtu)	Electric Cost	Gas Cost	Total Cost
Baseline	0	0	0	$ -	$ -	$ -
Proposed	0	0	($393)	$ -	($3,447)	($3,447)
Savings	0	0	393	$ -	$ 3,447	$ 3,447

Background & Formulas Used in Calculating Results

Energy savings for window caulking the original building construction windows and adding weather stripping to exterior doors at Middle Park High School, Fraser Valley Elementary School, Granby Elementary School, Grand Lake Elementary School, Indian Peaks Charter School, and the District Office were calculated using the following formula. The annual heating energy savings, *ES*, obtained by reducing the heating load due to outdoor air infiltration can be estimated from the following relationship:

$$ES = \frac{KH \times A \times E \times FA \times FT}{EFF}$$

where,

- *KH* = infiltration heat loss constant, Btu/yr-in^2
- *A* = area of infiltration opening, in^2
- *E* = effectiveness of opening (0.5 for perpendicular, north or south, winds; 0.25 for diagonal, east or west winds)[a], no units
- *FA* = fraction of infiltration avoidable, no units
- *FT* = fraction of the year that infiltration occurs, no units
- *EFF* = efficiency of heating system, no units

The fraction of the year that infiltration occurs estimated from total bin hours at a 60°F base as 7,616/8,760 = 0.87. By weather-stripping, air infiltration can be reduced by 100% (i.e., *FA* = 1). The estimated efficiency of the heating system is 80%. The air infiltration heat-loss constant is determined from the following relationship:

$$KH = \frac{Cp \times \rho \times V \times DHH \times C_1}{C_2 \times C_3}$$

where,

- Cp = specific heat of air, 0.24 Btu/lb°F
- ρ = density of air, 0.0557 lb/ft^3 (@ 8,000 feet above sea level)
- V = velocity of average wind, 6.2 MPH, 546 ft/min
- DHH = degree heating hours[b] (60°F base), 215,885 °F h/yr
- C_1 = conversion constant, 60 min/h
- C_2 = conversion constant, 144 in^2/ft^2
- C_3 = conversion constant, 1,000,000 Btu/MMBtu

The heating set-point temperature for the areas considered is 70°F. An estimated internal gain of 10°F is generated by the activities that occur in the areas considered. Thus, the outside temperature below which heating is needed is 70 – 10 = 60°F.

The degree heating hours at this 60°F base us 215,885 °F h/yr. thus, the heat-loss coefficient is calculated as follows:

$$KH = \frac{(0.24)(0.0557)(546)(215{,}885)(60)}{144} = 0.656\ MMBtu/yr\ in^2$$

[a] **ASHRAE Handbook of Fundamentals 1989**, p. 23.8, Equation 18.

[b] Calculated using Typical Meteorological Year (TMY2) data.

< Blank Page >

ECM 8.1 - VFD Savings Summary

Audit Year 2

28-May-2012	← EMCS Sample Data Acquisition Date		
Facility	kWh/Yr Baseline	kWh/Yr Savings	Electric Cost Savings
Middle Park High	48,075	39,409	$ 2,424
Fraser Valley Elementary	19,047	15,779	$ 938
East Grand Middle	45,928	38,047	$ 2,340
Totals	113,051	93,234	**$ 5,702**

During a review of EMCS data completed on the date noted in the table above, control point interval sample data was acquired and charted to validate VFD operation for fans and pumps as indicated below.

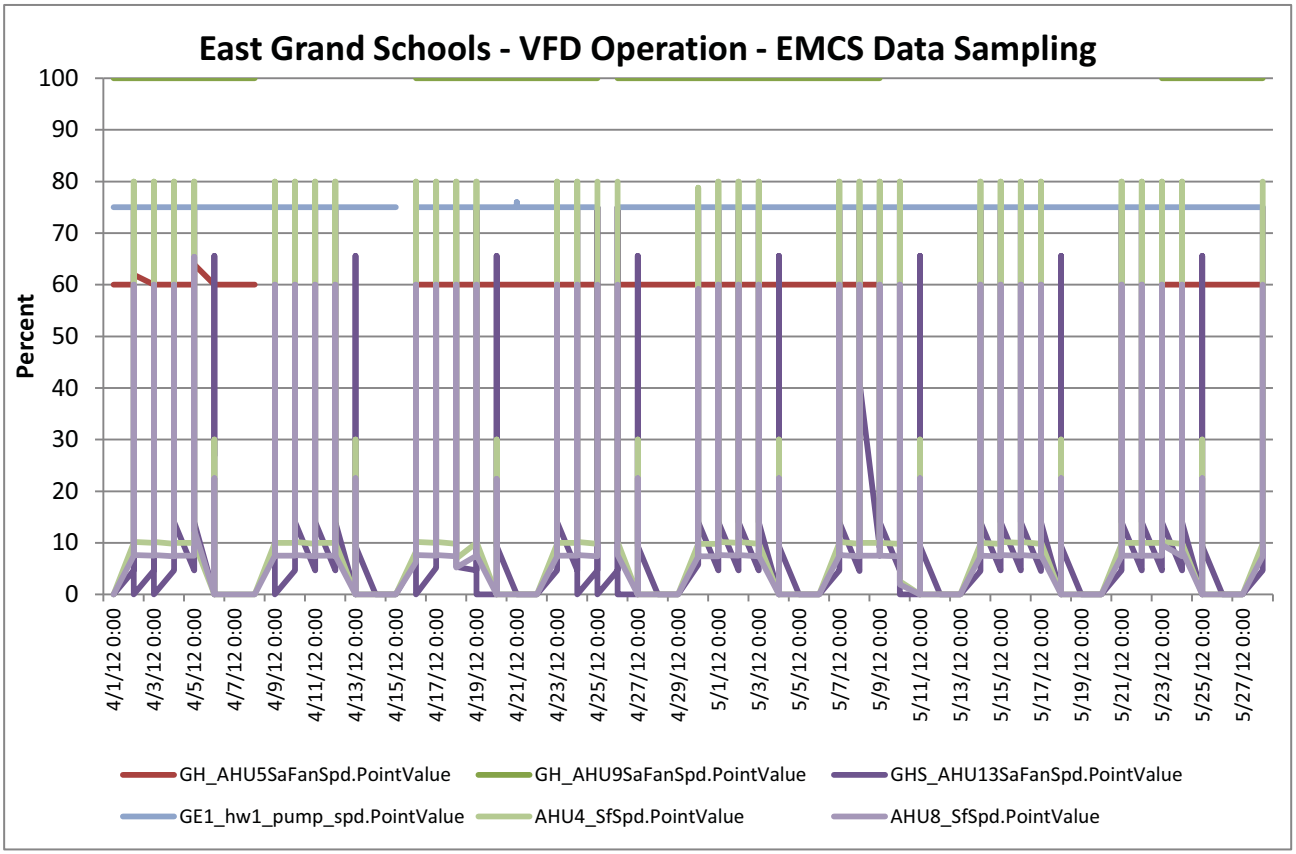

ECM 8.1 - VFD Savings
Middle Park High School
Supply and Minimum Outdoor Air Flows

Audit Year 2

Unit Tag	Area Served	SA Flow, cfm[1]	Design OA Flow[2]	Design OA Fraction	Partial Occ OA Flow[3]	Partial Occ OA Fraction
HVU-1	Auditorium & Stage	11,175	4,461	40%	794	7%
HVU-9	Gym Play & Spectator Areas	15,000	7,315	49%	1,602	11%
AHU-1	South Classrooms & Offices	12,325	3,725	30%	N/A	N/A
AHU-2	North Classrooms & Offices	12,800	4,241	33%	N/A	N/A
AHU-1	New Gym	17,000	850[4]	5%	850[4]	5%

Notes

[1] Based on design airflow through diffusers

[2] Based on ASHRAE Standard 62.1-2007 and full occupancy

[3] Based on ASHRAE Standard 62.1-2007 and 30 occupants in area served (one class)

[4] New Gym Based on CO2 Sensor Control & Minimum Airflow Indicated On The Drawings

	$/kWh	$/kW	$/MMBtu
Electric Cost Rates:	$0.0615	$4.53	
NatGas Cost Rates:			$8.6421

HVU-1 & HVU-9 Control:
MAT setpoint of 60 F

Heating Savings = ((1.08 x 0.743 x (Design OA Flow - Partial Occ OA Flow) x (60 - Bin Temp) x (Bin Total Occ Hours - Bin Game Hours))/1000000 (MMBtu)

HVU-9:	MMBtu	Bin dry bulb	Total Bin Hrs	Total Bin Occupied Hours	Games Bin Occupied Hours	Fully Occ Gas Cons MMBtu	Partial Occ Gas Cons MMBtu
		87.5	1	0			
		82.5	12	4			
		77.5	75	32			
		72.5	221	100			
		67.5	375	173			
		62.5	460	176			
	1.8	57.5	487	159		1.8	0.0
	6.1	52.5	635	187	10	6.4	0.3
	11.4	47.5	726	231	32	13.2	1.8
	14.2	42.5	752	222	45	17.8	3.6
	17.3	37.5	727	244	76	25.2	7.8
	27.0	32.5	848	330	116	41.6	14.6
	30.4	27.5	922	296	92	44.1	13.7
	23.6	22.5	787	219	82	37.7	14.1
	20.3	17.5	545	163	59	31.8	11.5
	23.3	12.5	413	137	30	29.8	6.5
	15.6	7.5	268	76	11	18.3	2.6
	10.8	2.5	226	51	10	13.4	2.6
	6.3	-2.5	138	31	9	8.9	2.6
	6.5	-7.5	85	28	7	8.7	2.2
	4.3	-12.5	37	18	5	6.0	1.7
	0.0	-17.5	13	4	4	1.4	1.4
	0.0	-22.5	2	1	1	0.4	0.4
	-0.4	-27.5	2	0	1	0.0	0.4
	0.0	-32.5	3	3	3	1.3	1.3
Total Gas Savings: (MMBtu)	218.5		8760	2885	593	308	89
Baseline Period:							
Gas Consumption:	307.8						
Performance Year Period:							
Gas Consumption:	89.2						
% Gas Savings:	5.1%						
Gas Cost Savings:	$1,888						

HVU-1:	MMBtu	Bin dry bulb	Total Bin Hrs	Total Bin Occupied Hours	Concert - Practice Bin Occupied Hours	Fully Occ Gas Cons MMBtu	Partial Occ Gas Cons MMBtu
		87.5	1	0			
		82.5	12	4			
		77.5	75	32			
		72.5	221	100			
		67.5	375	173			
		62.5	460	176			
	1.2	57.5	487	159		1.2	0.0
	3.9	52.5	635	187	10	4.1	0.2
	7.3	47.5	726	231	32	8.5	1.2
	9.1	42.5	752	222	45	11.4	2.3
	11.1	37.5	727	244	76	16.2	5.0
	17.3	32.5	848	330	116	26.7	9.4
	19.5	27.5	922	296	92	28.3	8.8
	15.1	22.5	787	219	82	24.2	9.0
	13.0	17.5	545	163	59	20.4	7.4
	15.0	12.5	413	137	30	19.1	4.2
	10.0	7.5	268	76	11	11.7	1.7
	6.9	2.5	226	51	10	8.6	1.7
	4.0	-2.5	138	31	9	5.7	1.7
	4.2	-7.5	85	28	7	5.6	1.4
	2.8	-12.5	37	18	5	3.8	1.1
	0.0	-17.5	13	4	4	0.9	0.9
	0.0	-22.5	2	1	1	0.2	0.2
	-0.3	-27.5	2	0	1	0.0	0.3
	0.0	-32.5	3	3	3	0.8	0.8
Total Gas Savings: (MMBtu)	140.3		8760	2885	593	198	57
Baseline Period:							
Gas Consumption:	197.5						
Performance Year Period:							
Gas Consumption:	57.3						
% Gas Savings:	3.3%						
Gas Cost Savings:	$1,212						
MPHS Total Gas Savings: (MMBtu)	359						
Baseline Period:							
Gas Consumption:	505.3						
Performance Year Period:							
Gas Consumption:	146.5						
% Gas Savings:	8.4%						
Gas Cost Savings:	$3,100						

ECM 8.1 Install VFD's

New Gym AHU-1

Fan Power Baseline = LF x HP x 0.746 kW/HP
Assume Installed Supply Airflow Condition @ 60% of Current Supply Design Airflow
Fan Power Installed = Fan Power Baseline x (Installed Supply Airflow/Current Supply Airflow)^3
Energy Savings = (Fan Power Baseline - Fan Power Installed) x (Total Bin Occupied Hours - Games Bin Occupied Hours)

LF = Measured 10.5 hp Actual 20 hp 0.525
Fan Motor Eff = 91% from motor nameplate data

Baseline Period:		
Fan Power:	7.8	kW
Fan Consumption:	22,598	kWh/yr

Performance Year Period:		
Fan Power:	1.7	kW
Fan Consumption:	3,878	kWh/yr
Electric Savings:	18,720	kWh/yr
% Electric Savings:	2.4%	
Electric Cost Savings:	$1,151	

Old Gym HVU-9

Energy Savings = (Fan Power Baseline - Fan Power Installed) x (Total Bin Occupied Hours - Games Bin Occupied Hours x 1 + (1/Exist Eff - 1/New Eff)

LF = Load Factor Assumed to be 70%
Fan Motor Eff Assumed to be 88.7% Older Motor Efficiency From Original Building AHU-1
New Fan Motor Efficiency = 91.3%

Baseline Period:		
Fan Power:	4.4	kW
Fan Consumption:	12,739	kWh/yr
Performance Year Period:		
Fan Power:	1.0	kW
Fan Consumption:	2,394	kWh/yr
Electric Savings:	10,344	kWh/yr
% Electric Savings:	1.3%	
Electric Cost Savings:	$636	

Auditorium HVU-1

LF = Load Factor Assumed to be 70%
Fan Motor Eff Assumed to be 88.7% Older Motor Efficiency From Original Building AHU-1
New Fan Motor Efficiency = 91.3%

Baseline Period:		
Fan Power:	4.4	kW
Fan Consumption:	12,739	kWh/yr
Performance Year Period:		
Fan Power:	1.0	kW
Fan Consumption:	2,394	kWh/yr
Electric Savings:	10,344	kWh/yr
% Electric Savings:	1.3%	
Electric Cost Savings:	$636	

MPHS	Electric Baseline:	48,075	kWh
	Electric Baseline:	16.7	kW
	Electric Savings:	39,409	kWh
	% Electric Savings:	5.0%	
	Total Electric Cost Savings:	**$2,424**	

ECM 8.1 - VFD Savings
Fraser Valley Elementary School
Supply and Minimum Outdoor Air Flows

Audit Year 2

Unit Tag	Area Served	SA Flow, cfm[1]	Design OA Flow[2]	Design OA Fraction	Partial Occ OA Flow[3]	Partial Occ OA Fraction
AHU-1	Gym play & spectator areas	12,640	3,750	30%	1,276	10%

Notes
[1] Based on design airflow through diffusers
[2] Based on Original Design Conditions from drawings and full occupancy
[3] Based on ASHRAE Standard 62.1-2007 and 30 occupants in area served (one class)

	$/kWh	$/kW	$/MMBtu
Electric Rates:	$0.0594	$4.53	
Gas Rates:			$8.6421

AHU-1
MAT setpoint of 60 F

Heating Savings = ((1.08*0.743 x (Design OA Flow - Partial Occ OA Flow) x (60 - Bin Temp) x (Bin Total Occ Hours - Bin Game Hours))/1000000
(MMBtu)

AHU-1:	MMBtu	Bin dry bulb	Total Bin Hrs	Total Bin Occupied Hours	Games Bin Occupied Hours	Fully Occ Gas Cons MMBtu	Partial Occ Gas Cons MMBtu
		87.5	1	0			
		82.5	12	4			
		77.5	75	32			
		72.5	221	100			
		67.5	375	173			
		62.5	460	176			
	0.8	57.5	487	159		0.8	0.0
	2.6	52.5	635	187	10	2.8	0.1
	4.9	47.5	726	231	32	5.7	0.8
	6.1	42.5	752	222	45	7.7	1.6
	7.5	37.5	727	244	76	10.9	3.4
	11.7	32.5	848	330	116	18.0	6.3
	13.2	27.5	922	296	92	19.1	5.9
	10.2	22.5	787	219	82	16.3	6.1
	8.8	17.5	545	163	59	13.8	5.0
	10.1	12.5	413	137	30	12.9	2.8
	6.8	7.5	268	76	11	7.9	1.1
	4.7	2.5	226	51	10	5.8	1.1
	2.7	-2.5	138	31	9	3.8	1.1
	2.8	-7.5	85	28	7	3.8	0.9
	1.9	-12.5	37	18	5	2.6	0.7
	0.0	-17.5	13	4	4	0.6	0.6
	0.0	-22.5	2	1	1	0.2	0.2
	-0.2	-27.5	2	0	1	0.0	0.2
	0.0	-32.5	3	3	3	0.6	0.6
Total Gas Savings:	94.6		8760	2885	593	133	39
(MMBtu)							
Baseline Period:							
Gas Consumption:	133.3						
Performance Year Period:							
Gas Consumption:	38.6						
% Gas Savings:	2.8%						
Gas Cost Savings:	$818						

ECM 8.1 VFD Savings

Fan Power Baseline = LF x HP x 0.746 kW/HP
Assume Installed Supply Airflow Condition @ 60% of Current Supply Design Airflow
Fan Power Installed = Fan Power Baseline x (Installed Supply Airflow/Current Supply Airflow)3
Energy Savings = (Fan Power Baseline - Fan Power Installed) x (Total Bin Occupied Hours - Games Bin Occupied Hours)

LF = Measured 8.85 hp Actual 10 hp 0.885
Fan Motor Eff = 89.5% from motor nameplate data

Baseline Period:		
Fan Power:	6.6	kW
Fan Consumption:	19,047	kWh/yr
Performance Year Period:		
Fan Power:	1.4	kWh/yr
Fan Consumption:	3,269	kWh/yr

FVES	Electric Baseline:	19,047	kWh/yr
	Electric Baseline:	6.6	kW/yr
	Electric Savings:	15,779	kWh/yr
	% Electric Savings:	3.6%	
	Electric Cost Savings:	**$938**	

ECM 8.1 - VFD Savings
East Grand Middle School
Supply and Minimum Outdoor Air Flows

Audit Year 2

Unit Tag	Area Served	SA Flow, cfm[1]	Design OA Flow[2]	Design OA Fraction	Partial Occ OA Flow[3]	Partial Occ OA Fraction
AHU-4	Commons/Cafeteria	12,000	4,800	40%	1,194	10%
AHU-8	Gym play & spectator areas	18,000	5,000	28%	1,872	10%

Notes
[1] Based on design airflow through diffusers
[2] Based on Original Design Conditions from drawings and full occupancy
[3] Based on ASHRAE Standard 62.1-2007 and 30 occupants in area served (one class)

	$/kWh	$/kW	$/MMBtu
Electric Rates:	$0.0615	$4.53	
Gas Rates:			$8.6421

AHU-8 Currently 0% OSA (Requires Baseline Adjustment)
AHU-4 Control:
MAT setpoint of 60 F

Heating Savings = 0 (No OSA For Ventilation)
(MMBtu)

AHU-8:	MMBtu	Bin dry bulb	Total Bin Hrs	Total Bin Occupied Hours	Games Bin Occupied Hours
		87.5	1	0	
		82.5	12	4	
		77.5	75	32	
		72.5	221	100	
		67.5	375	173	
		62.5	460	176	
		57.5	487	159	
		52.5	635	187	10
		47.5	726	231	32
		42.5	752	222	45
		37.5	727	244	76
		32.5	848	330	116
		27.5	922	296	92
		22.5	787	219	82
		17.5	545	163	59
		12.5	413	137	30
		7.5	268	76	11
		2.5	226	51	10
		-2.5	138	31	9
		-7.5	85	28	7
		-12.5	37	18	5
		-17.5	13	4	4
		-22.5	2	1	1
		-27.5	2	0	1
		-32.5	3	3	3
			8760	2885	593

Heating Savings = ((1.08 x 0.743 x (Design OA Flow - Partial Occ OA Flow) x (60 - Bin Temp) x (Bin Total Occ Hours - Bin Game Hours))/1000000
(MMBtu)

AHU-4:	MMBtu	Bin dry bulb	Total Bin Hrs	Total Bin Occupied Hours	Concert - Practice Bin Occupied Hours	Fully Occ Gas Cons MMBtu	Partial Occ Gas Cons MMBtu
		87.5	1	0			
		82.5	12	4			
		77.5	75	32			
		72.5	221	100			
		67.5	375	173			
		62.5	460	176			
	1.2	57.5	487	159		1.2	0.0
	3.8	52.5	635	187	10	4.1	0.2
	7.2	47.5	726	231	32	8.4	1.2
	9.0	42.5	752	222	45	11.2	2.3
	10.9	37.5	727	244	76	15.9	4.9
	17.0	32.5	848	330	116	26.3	9.2
	19.2	27.5	922	296	92	27.8	8.7
	14.9	22.5	787	219	82	23.8	8.9
	12.8	17.5	545	163	59	20.0	7.3
	14.7	12.5	413	137	30	18.8	4.1
	9.9	7.5	268	76	11	11.5	1.7
	6.8	2.5	226	51	10	8.5	1.7
	4.0	-2.5	138	31	9	5.6	1.6
	4.1	-7.5	85	28	7	5.5	1.4
	2.7	-12.5	37	18	5	3.8	1.0
	0.0	-17.5	13	4	4	0.9	0.9
	0.0	-22.5	2	1	1	0.2	0.2
	-0.3	-27.5	2	0	1	0.0	0.3
	0.0	-32.5	3	3	3	0.8	0.8

AHU-4:	MMBtu	Bin dry bulb	Total Bin Hrs	Total Bin Occupied Hours	Concert - Practice Bin Occupied Hours	Fully Occ Gas Cons MMBtu	Partial Occ Gas Cons MMBtu
Total Gas Savings:	137.9		8760	2885	593	194	56
(MMBtu)							
Baseline Period:							
Gas Consumption:	194.2						
Performance Year Period:							
Gas Consumption:	56.3						
% Gas Savings:	2.6%						
Gas Cost Savings:	$1,192						

AHU-8 Baseline Adjustment:

Heating Baseline Adjustment =

((1.08 x 0.743 x (Design OA Flow) x (60 - Bin Temp) x (Games Bin Occ Hours) + 0.743 x (Partial Occ OA Flow) x (60 - Bin Temp) x (Total Bin Occ Hours -Bin Game Hours))

1000000 (MMBtu)

AHU-8:	MMBtu	Bin dry bulb	Total Bin Hrs	Total Bin Occupied Hours	Games Bin Occupied Hours
		87.5	1	0	
		82.5	12	4	
		77.5	75	32	
		72.5	221	100	
		67.5	375	173	
		62.5	460	176	
	0.6	57.5	487	159	
	2.3	52.5	635	187	10
	5.3	47.5	726	231	32
	7.8	42.5	752	222	45
	12.5	37.5	727	244	76
	21.6	32.5	848	330	116
	22.0	27.5	922	296	92
	20.1	22.5	787	219	82
	16.7	17.5	545	163	59
	13.4	12.5	413	137	30
	7.4	7.5	268	76	11
	5.8	2.5	226	51	10
	4.3	-2.5	138	31	9
	4.0	-7.5	85	28	7
	2.9	-12.5	37	18	5
	1.2	-17.5	13	4	4
	0.3	-22.5	2	1	1
	0.2	-27.5	2	0	1
	1.1	-32.5	3	3	3
Total Gas Baseline Adjustment:	149.7		8760	2885	593
% Gas Usage:	2.8%				
Gas Cost Adjustment:	$1,294				

ECM 8.1 VFD Savings

AHU-8

Fan Power Baseline = LF x HP x 0.746 kW/HP
Assume Installed Supply Airflow Condition @ 60% of Current Supply Design Airflow
Fan Power Installed = Fan Power Baseline x (Installed Supply Airflow/Current Supply Airflow)3
Energy Savings = (Fan Power Baseline - Fan Power Installed) x (Total Bin Occupied Hours - Games Bin Occupied Hours)

LF = Measured 15.4 hp Actual 20 hp 0.77
Fan Motor Eff = 93% from motor nameplate data

Baseline Period:		
Fan Power:	11.5	kW
Fan Consumption:	33,144	kWh/yr

Performance Year Period:		
Fan Power:	2.5	kWh/yr
Fan Consumption:	5,688	kWh/yr
Electric Savings:	27,456	kWh/yr
% Electric Savings:	3.4%	
Electric Cost Savings:	$1,689	

AHU-4

LF = Measured 5.94 hp Actual 15 hp 0.396
Fan Motor Eff = 91.7% from motor nameplate data

Fan Power Baseline = LF x HP x 0.746 kW/HP
Assume Installed Supply Airflow Condition @ 60% of Current Supply Design Airflow
Fan Power Installed = Fan Power Baseline x (Installed Supply Airflow/Current Supply Airflow)3
Energy Savings = (Fan Power Baseline - Fan Power Installed) x (Total Bin Occupied Hours - Games Bin Occupied Hours)

	Baseline Period:		
	Fan Power:	4.4	kW
	Fan Consumption:	12,784	kWh/yr
	Performance Year Period:		
	Fan Power:	1.0	kWh/yr
	Fan Consumption:	2,194	kWh/yr
	Electric Savings:	10,590	kWh/yr
	% Electric Savings:	1.3%	
	Electric Cost Savings:	$651	
EGMS	Electric Baseline:	45,928	kWh/yr
	Electric Baseline:	15.9	kW
	Electric Savings:	38,047	kWh/yr
	% Electric Savings:	4.7%	
	Electric Cost Savings:	**$2,340**	

Honeywell

Report Delivery Receipt

Honeywell has presented the Energy Cost Avoidance Review for East Grand School District RE-2, Contract No. 423-10980. This report details energy/operational savings results for Audit Year 2 and indicates savings/cost avoidance of $131,483 for the audit year. The cumulative energy/operational cost avoidance through the end of Year 2 is $278,526 as compared to the cumulative energy/operational guarantee per the contract of $241,474, yielding an inception-to-date savings performance of 115%.

Please sign below to acknowledge receipt of this report. Your signature does not indicate acceptance of the results. If the results are not agreed upon, East Grand School District RE-2 has forty-five (45) days from the delivery date of this report to reply in writing to Honeywell Building Solutions, Americas M&V Services, 3307 56th St., Lubbock, TX 79413-4812. Otherwise, the energy savings/cost avoidance results reported herein will be deemed accepted.

Received by:	Presented by:
_____	Thayer F. Hussey, CEM, CMVP, BEP
Name (please print)	Name (please print)
_____	_____
Signature	Signature
_____	_____
Date	Date

APPENDIX 2:

RESUMES OF KEY PERSONNEL

Honeywell

Michael Murphy Account Executive	*Responsible for managing the customer accounts in the Pacific Northwest.*
Project Experience	▪ Snohomish School District Phase I, Snohomish, WA, Lighting retrofits, HVAC replacements, controls at six schools. $828,010. ▪ Snohomish School District Phase II, Snohomish, WA, Lighting retrofits, HVAC replacements, controls at two schools and M&O facility. $568,428. ▪ Boeing – Renton Plant, Renton, WA, DDC and Process Controls installations. $10 M. ▪ Lake Washington School District, Kirkland, WA, Installed Honeywell DDC Controls integrated with EBI front end. $4.8 M. ▪ Snoqualmie Valley School District, Snoqualmie, WA, Mechanical, DDC, Fire, Lighting Upgrade and Security. $9 M. ▪ Granite Falls School District Phase I, Granite Falls, WA, Energy retrofits including DDC, Mechanical and Lighting Upgrades. $848,000. ▪ Granite Falls School District Phase II, Granite Falls, WA, Energy retrofits including Envelope, DDC, Mechanical and Lighting Upgrades. $1.2.
Education	North Seattle Community College, Seattle, WA Associate of Applied Science Degree, HVAC Engineering and Design Technology
Years of Industry Experience	25
Professional Licenses	N/A
Certifications	Six Sigma Green Belt Certified
Affiliations	Associate member of Washington Association of Maintenance & Operations Administrators (WAMOA)

Honeywell

Chris Whelihan Project Manager	*Duties include project management of energy retrofit projects including management of the subcontractors, quality, safety, and contract activities.*
Project Experience	▪ City of Phoenix, Phoenix, AZ. $2.3 M ▪ Scottsdale USD solar thermal chiller, Scottsdale, AZ. $750,000 ▪ Yuma County – City of Wray, Wray, CO $840,000 ▪ Chino Valley High School PEA, Chino Valley, AZ. $600,000 ▪ Hilton Hotels Corporation, Beverly Hills, CA ▪ Hilton Hotels – Palace and Bay Suites, Waikoloa, HI ▪ Pure Fitness Centers, Scottsdale and Phoenix, AZ ▪ Jitters Coffee Shop, Phoenix, AZ ▪ Toys R Us, Superstition Springs, AZ ▪ Petco, Scottsdale, AZ ▪ PetSmart, Phoenix, AZ ▪ SBC Telecom, Phoenix, AZ ▪ 3M Company Chemical Plant Tank Farm, Decatur, AL ▪ 3M Company Warehouse Expansion, Columbia, MO ▪ Superstar Car Wash, Phoenix, AZ ▪ Swisstech Tooling and Manufacturing, Scottsdale, AZ ▪ Safeguard Security, Scottsdale, AZ ▪ Dolphin Quest Village – LEED Certified Silver, Waikoloa, HI ▪ Arrowhead Business Park, Peoria, AZ ▪ CVS Pharmacies, Phoenix, Chandler and Tempe, AZ ▪ CVS Pharmacy, Las Vegas, NV
Education	University of Wisconsin – Stout, Stout, Wisconsin BS in Industrial Technology, Construction Management concentration
Years of Industry Experience	19
Professional Licenses	N/A
Certifications	N/A
Affiliations	N/A

Honeywell

Mary T. Wyand, P.E., CEM Solutions Development Engineer (SDE)	*Duties include energy engineering, project development, design engineering and estimating of energy services projects, production of financial packages for third party financing institutions, and management of pre-installation subcontractor relationships and negotiations.*
Experience	▪ City of Livermore WWTP – Preliminary Energy Analysis, Livermore, CA. ▪ County of Alameda, Alameda, CA. $4.5 M. ▪ Merced Community College District, Merced, CA. $3.1 M. ▪ City of Antioch Street and Park Lighting Project, Antioch, CA $4.65 M. ▪ Solano County PV project, Fairfield, CA $10.2 M. ▪ Dixon Unified School District PV project, Dixon, CA $8.7 M. ▪ Riverdale Joint Unified School District PV project, Riverdale, CA. $5.8 M. ▪ St. Francis Medical Center Ph II, San Francisco, CA. ▪ Mercy San Juan Medical Center, Carmichael, CA. $200,000. ▪ Twin Falls School District Ph II, Twin Falls, ID. $3.9 M. ▪ Kimberly School District TEA, Kimberly, ID. $500,000. ▪ 24 Hour Fitness, multiple locations across the US, $1.0 M. ▪ Twin Falls School District No. 411 Ph I, Twin Falls, ID. $4.8 M. ▪ Yuba County. $1.1 M. ▪ CarrAmerica. $2.8 M. ▪ Boeing-Anaheim. $10.0 M. ▪ Housing Authority-Contra Costa County, $1.6 M. ▪ Bank of America. $1.1M. ▪ Kraft-Modesto. $1.2 M.
Education	Arizona State University, Tempe, AZ B.S. degree in Mechanical Engineering, June 1986
Years of Industry Experience	27
Professional Licenses	P.E., State of California, Number 26409
Certifications	Certified Energy Manager (CEM) Six Sigma Greenbelt Certified LEED 2.1® Accredited Professional
Affiliations	Member, American Society of Heating, Refrigerating, and Air Conditioning Engineers (ASHRAE) Member, Association of Energy Engineers (AEE)

Honeywell

J. Kevin Cross, P.E., CEM Solutions Development Engineer (SDE)	*Duties include energy engineering, project development, design engineering and estimating of energy services projects, and management of pre-installation subcontractor relationships and negotiations.*
Project Experience	▪ Town of Lyons Automated Meter Reading – Investment Grade Audit, Lyons, CO. $1.0 M. ▪ WRAC Project - City of Wray, Wray, CO. $440,000. ▪ Peetz School District, Peetz, CO. $1.3 M. ▪ Lamar Community College, Lamar, CO. $2.3 M. ▪ El Paso County, Colorado. $2.9 M. ▪ Pueblo School District 70 Phases I and II, Colorado. $5.8 M. ▪ Yuma County and City of Wray, Colorado. $830,000. ▪ Teton County, Wyoming. $1.9 M. ▪ Solano County Solar PV, California. $10.2 M. ▪ Memorial Hospital of Sweetwater County EPC, Wyoming. $1.7 M. ▪ City of Rifle Water Meters, Colorado. $840,000. ▪ Twin Falls School District #411 EPC, Idaho. $4.8 M. ▪ City and Borough of Sitka, Alaska. $500,000. ▪ 24 Hour Fitness, multiple locations across the US. $1.0 M. ▪ GSA Office Buildings, multiple locations in Texas and Oklahoma. $1.8 M.
Education	University of Wisconsin, Madison, Wisconsin MS. degree in Mechanical Engineering, December 1994 University of California, Davis, California B.S. degree in Physics, June 1985
Years of Industry Experience	16
Professional Licenses	P.E., State of Colorado, Number 37292
Certifications	LEED® 2.0 Accredited Professional Certified Energy Manager (CEM) Certified Indoor Air Quality Professional (CIAQP) Six Sigma Greenbelt Certified
Affiliations	Member, American Society of Heating, Refrigerating, and Air Conditioning Engineers (ASHRAE) Member, Association of Energy Engineers (AEE) Member, American Solar Energy Society (ASES) Associate Member, Illuminating Engineering Society of North America (IESNA)

Honeywell

Justin Rundle, P.E., CEM Solutions Development Engineer (SDE)	*Has worked at water and wastewater treatment plants for fifteen years and specializes in water / wastewater energy savings projects. He has been involved in dozens of preliminary energy audits (PEAs) and investment grade audits (IGAs) for Honeywell.*
Project Experience	▪ Agua Fria Trunk Pipeline, Buckeye, Maricopa County, AZ. ▪ Alamo Dam Hydroelectric Project, Alamo Lake, AZ . ▪ Alfred Merritt Smith Water Treatment Plant, Las Vegas, NV. ▪ BHP Billiton New Desalination Plant Project, Santiago, Chile. ▪ Bullhead City Wastewater System PEA, Bullhead City, AZ. ▪ Cucamonga Valley Water District PEA, Rancho Cucamonga, CA. ▪ East Valley Water District PEA, Highland, CA. ▪ City of Kingman Water System PEA, Kingman, AZ. ▪ City of Lamar Well Upgrade Project, Lamar, CO. ▪ Livermore WWTP PEA, Livermore, CA. ▪ Northwest Valley Water Reclamation Facility, Sun City West, AZ . ▪ City of Pleasanton Water System Improvements, Pleasanton, CA. ▪ Pumped Storage Hydroelectric Power Project Designs, Grand Canyon and Sunflower, AZ. ▪ Town of Lyons - WWTP SBR upgrade, Lyons, CO. ▪ Rancho El Dorado Water Reclamation Facility, Maricopa, AZ. ▪ Tubac Water Plant and Arsenic Treatment System, Tubac, AZ. ▪ Tombstone High School Water System, Tombstone, AZ. ▪ Ukiah WWTP Cogeneration Project, Ukiah, CA. ▪ 91st Avenue WWTP Litigation Support, Phoenix, AZ.
Education	University of Iowa, Iowa City, IA MBA, 1989 University of Iowa, Iowa City, IA MS in Industrial Engineering, 1989 Iowa State University, Ames, IA BS in Mechanical Engineering, 1984
Years of Industry Experience	25
Professional Licenses	P.E., State of Arizona, #39899 (mechanical) and 47956 (civil) P.E., State of New Mexico, #16988 P.E., State of Texas, # 97804 P.E., State of Michigan, #41889 P.E., State of Kentucky, #18344 Licensed Class “A” General Contractor, Arizona, # ROC220055
Certifications	Certified Energy Manager (CEM) Certified Construction Manager (CCM) Certified Construction Contract Administrator (CCCA) Grade 4 Operator in Arizona for Water/Wastewater plants LEED® 2.0 Accredited Professional Arbitrator for the American Arbitration Association
Affiliations	Construction Management Association of America Project Management Institute

Honeywell

Shoko Imamura Solutions Development Engineer (SDE)	*Duties include identifying energy conservation measures, defining baseline, developing measurement and verification methodologies, generating financial reports, utility cost analysis and life cycle cost analysis.*
Project Experience	In her role as a Performance Contract Engineer, Shoko is responsible for identifying energy conservation measures, analyzing energy consumption and savings, and solution development. Projects Include: ▪ Snohomish School District Ph. 3 – Investment Grade Audit, Snohomish, WA. ▪ City of Walla Walla Ph II, Walla Walla, WA ▪ Snohomish School District Ph. I, Snohomish, WA. $828,010. ▪ Snohomish School District Ph. 2, Snohomish, WA. $568,428. ▪ Fairbanks Memorial Hospital, Fairbanks, AK, Energy Master Plan Development ▪ Peninsula College, Port Angeles, WA, Technical Energy Audit ▪ Alaska Sealife Center, Seward, AK, Technical Energy Audit
Education	University of Utah, Salt Lake City, UT BS in Chemical Engineering, 2008
Years of Industry Experience	3
Affiliations	Member, Association of Energy Engineers (AEE)

Honeywell

Amy Cho, CEM Energy Analyst	*Duties include delivering energy solutions to customers throughout the Pacific Northwest, specializing in HVAC mechanical troubleshooting, controls optimization, demand response and utility rebates.*
Project Experience	In her previous role, Amy developed and implemented a full service energy department for T-Mobile, winning the Association of Energy Engineer's Best Energy Management Team Western US (2008). In addition she launched an emergency services platform with over 1000 utility providers for priority reconnection. Her role included performing audits across the entire portfolio of T-Mobile sites, which included corporate campuses, warehouses, call centers, data centers, mobile switching centers, network operations centers, offices, cell towers and retail locations. Projects included: ▪ T-Mobile USA, Retail Locations Nationwide ▪ T-Mobile USA, Cell Towers Nationwide ▪ T-Mobile USA, Corporate Campuses Nationwide ▪ T-Mobile USA, Mobile Switching Centers Nationwide ▪ T-Mobile USA, Data Centers Nationwide ▪ T-Mobile USA, Network Operations Centers Nationwide ▪ T-Mobile USA, Warehouses Nationwide ▪ T-Mobile USA, Call Centers Nationwide ▪ T-Mobile USA, Branch Offices Nationwide
Education	South Seattle Community College, Seattle, WA Coursework in Building Science
Years of Industry Experience	13
Professional Licenses	N/A
Certifications	Certified Energy Manager (CEM) Commercial Energy Auditing, South Seattle Community College (SSCC) Controls and Building Automation Systems, SSCC Energy Codes, Standards and Policies, SSCC Energy Efficient Building Commissioning, SSCC
Affiliations	Member, Association of Energy Engineers

Honeywell

Terry Johnson Engineering Estimator	*Responsible for estimating, sales support and application engineering for Honeywell Commercial Construction projects.*
Experience	Extensive experience in Hospital Fire Alarm and Automation installations including: ▪ Swedish Medical Center – Seattle ▪ Virginia Mason Medical Center – Seattle ▪ Legacy Good Samaritan Hospital - Portland ▪ Queens Medical Center – Honolulu ▪ Tripler Army Medical Center - Honolulu
Education	Anchorage Community College, Anchorage, Alaska AAS Degree
Years of Industry Experience	32
Professional Licenses	State of Washington Electrical Administrator

Honeywell

Aamer Athar M&V Lead Automation Controls and Solutions	*Responsible for ensuring that energy saving projects include practical performance measurement and verification (M&V) plans that support the financial guarantees and meet with the Client's expectations for savings, as well as the review of energy savings risks of guaranteed ESPC projects sold within the U.S., teaming with contract, financial, and project installation managers.*
Project Experience	▪ All Saints Hospital, Fort Worth, TX. $4 M. ▪ VISN 8 – Florida VA, Various FL Locations. $28.5 M. ▪ Westinghouse Savannah River Company Aiken, SC. $20 M. ▪ Maricopa County, Maricopa County, AZ. $3.98 M. ▪ Sweetheart Cup, Dallas, TX. $3.6 M. ▪ City Center Development Company, Fort Worth, TX. $5.23 M. ▪ GSA White Oak, FDA Campus, MD. $285 M. ▪ Vandenberg AFB. $5.6 M.
Education	MBA, Global Energy Management, University of Houston, Houston, Texas, May, 2007 M.S. Mechanical Engineering - Texas A&M University, College Station, Texas. Dec, 1990 B.S. Mechanical Engineering - University of Engineering & Tech., Lahore, Pakistan. Jan, 1988
Years of Industry Experience	20
Professional Licenses	Licensed Professional Engineer (P.E.), Texas No. 85375 Licensed Professional Engineer (P.E.), Arkansas No. 13550
Certifications	Certified Carbon Reduction Manager (CRM)
Affiliations	Associate Member, American Society of Heating, Refrigerating, and Air Conditioning Engineers (ASHRAE) Association of Energy Engineers (AEE)

Honeywell

Bob Newkirk Sr. Contract Manager	*Responsible for writing, reviewing and negotiating Energy Performance Contracts in numerous states. He provides leadership and legal and process expertise for contracting and risk management, as well as support for overall project management. Mr. Newkirk also serves as a technical resource for Honeywell Performance Contracting teams nationwide.*
Experience	Prior to joining Honeywell, Mr. Newkirk's experience includes stints as an attorney at the U.S. Securities and Exchange Commission and a national law firm, and as an audit senior at a national accounting firm. Mr. Newkirk has extensive experience drafting and negotiating complex business contracts required to comply with multiple regulatory regimes.
Education	University of Illinois, Urbana-Champaign, Illinois B.S. degrees in Accountancy and Economics University of Chicago Law School, Chicago, IL Juris Doctorate (JD)
Years of Industry Experience	22
Professional Licenses	Licensed Attorney, Illinois
Certifications	Registered Certified Public Accountant, Illinois
Affiliations	N/A

APPENDIX 3:
SF 330

EXHIBIT B – QUESTIONNAIRE: STANDARD FORM 330

ARCHITECT – ENGINEER QUALIFICATIONS

PART I – CONTRACT-SPECIFIC QUALIFICATIONS

A. CONTRACT INFORMATION

1. TITLE AND LOCATION *(City and State)*
Notice to Energy Services Companies (ESCOs)

2. PUBLIC NOTICE DATE	3. SOLICITATION OR PROJECT NUMBER
January 23, 2013	**2013-133**

B. ARCHITECT-ENGINEER POINT OF CONTACT

4. NAME AND TITLE
Michael Murphy

CHECK IF BRANCH OFFICE **X**

6. TELEPHONE NUMBER	7. FAX NUMBER	8. E-MAIL ADDRESS
(425) 698-6129	**(425) 747-0624**	**Michael.murphy3@honeywell.com**

C. PROPOSED TEAM

(Complete this section for the prime contractor and all key subcontractors)

	(Check) PRIME	J.V. PARTNER	SUBCON-TRACTOR	9. FIRM NAME	10. ADDRESS	11. ROLE IN THIS CONTRACT
a.	✔			**Honeywell International, Inc.** X CHECK IF BRANCH OFFICE	**2700 Richards Rd., Ste. 102 Bellevue, WA 98005**	**Lead, Point of Contact**
b.			✔	**N/A** CHECK IF BRANCH OFFICE		
c.			✔	CHECK IF BRANCH OFFICE		
d.			✔	CHECK IF BRANCH OFFICE		
e.			✔	CHECK IF BRANCH OFFICE		
f.			✔	CHECK IF BRANCH OFFICE		

D. ORGANIZATIONAL CHART OF PROPOSED TEAM 4 *(following)*

MANDATORY USE DATE OF FORM 6/2004

Washington State Department of General Administration

Participating Washington State Programs

Project Development Phase

Michael Murphy - Account Executive
Single Point of Customer Contact during Project Development

Bob Newkirk – Contract Manager
Contract Negotiation

Aamer Athar, PE, CRM – M&V Lead
Collect Utility Bills – Develop Energy Baseline
EPA Portfolio Manager Applications

Engineering Team

Mary Wyand, PE, LEED AP
Solutions Development Engineer (SDE)

Kevin Cross, PE, LEED AP
SDE

Justin Rundle, PE, LEED AP
SDE

Shoko Imamura
SDE

Amy Cho, CEM
Energy Analyst

Responsibilities

- Site Surveys
- Work With Project Management
- Baseline Energy Use Development
- Facilities Operations Analysis
- Savings Calculations
- Modeling
- Develop M&V Plan
- Scope Evaluation and Selection
- Develop IGA Report
- Utility Rebates/Grants Development
- Develop Project Financing Options
- Engineering Design
- Carbon/Renewable Energy Credits
- Bid Specifications
- Work with Project Management
- Equipment Specification
- Team on Solution Development
- Submittals and Customer Approvals
- Subcontractor Selection, Schedule

Delivery Team

Chris Whelihan
Regional Project Manager

Fred Miller
Installation Project Manager

Responsibilities

- Manage Construction Phase
- Single Point of Customer Contact in Construction Phase
- Equipment Ordering
- Subcontract Procurement
- Coordinate/Manage Project Schedule
- Project Commissioning
- Liaison with M&V Team
- Develop O&M Manuals
- Customer Acceptance

Performance Period
M&V, Training & Support Services

Aamer Athar, PE, CRM – M&V Services Lead
Monitor Energy Savings Performance
Collect Monthly Utility Bills / Track Monthly Performance
Develop Annual Savings Audit
Performance Data to Web Tool
Upload Monthly Utility Data
EPA Portfolio Manager Tracking

John Lees – Field Service Leader
Single Point of Contact for Support Service Work

Chris Valentine – District General Manager
Oversees the activities of the District

Honeywell Technicians:
Matt Bagne, Bill Cornehl, Bob Woodworth, Michael Young, Steve Kuhlman, Patrick Shute

Responsibilities

- Project M&V
- Training
- Energy Awareness / Education
- Measurement & Reporting Goals / Accomplishments
- 24-Hour Emergency Service
- Preventive Maintenance
- Ongoing Performance Improvement Planning
- Executive Sponsorship / Management

E. RESUMES OF KEY PERSONNEL PROPOSED FOR THIS CONTRACT

(Complete one Section E for each person)

12. NAME	13. ROLE IN THIS CONTRACT	14. YEARS EXPEREINCE	
		a. TOTAL	b. WITH CURRENT FIRM
Michael Murphy	**Account Executive**	**22**	**16**

15. FIRM NAME AND LOCATION *(City and State)*

Honeywell International, Inc., Bellevue, WA

16. EDUCATION *(DEGREE AND SPECIALIZATION)*	17. CURRENT PROFIESSIONAL REGISTRATION *(STATE AND DISCIPLINE)*
Associate of Applied Science Degree, HVAC Engineering and Design Technology	**N/A**

18. OTHER PROFESSIONAL QUALIFICATIONS *(PUBLICATIONS, ORGANIZATIONS, TRAINING, AWARDS, etc.)*

Associate member of Washington Association of Maintenance & Operations Administrators (WAMOA)
Six Sigma Green Belt certified

19. RELEVANT PROJECTS

a.

(1) TITLE AND LOCATION *(City and State)*: **Snohomish School District Phase I, Snohomish, WA**

(2) YEAR COMPLETED — PROFESSIONAL SERVICES: **2010** — CONSTRUCTION *(if applicable)*: **2010**

[X] Check if project performed with current firm

(3) BRIEF DESCRIPTION *(Brief scope, size, cost, etc.)* AND SPECIFIC ROLE

Lighting retrofits, HVAC replacements, controls at six schools. $828,010. Account Executive.

b.

(1) TITLE AND LOCATION *(City and State)*: **Snohomish School District Phase II, Snohomish, WA**

(2) YEAR COMPLETED — PROFESSIONAL SERVICES: **2010** — CONSTRUCTION *(if applicable)*: **2011**

[X] Check if project performed with current firm

(3) BRIEF DESCRIPTION *(Brief scope, size, cost, etc.)* AND SPECIFIC ROLE

Lighting retrofits, HVAC replacements, controls at two schools and M&O facility. $568,428. Account Executive.

c.

(1) TITLE AND LOCATION *(City and State)*: **Boeing – Renton Plant, Renton, WA**

(2) YEAR COMPLETED — PROFESSIONAL SERVICES: **2005** — CONSTRUCTION *(if applicable)*: **2010**

[X] Check if project performed with current firm

(3) BRIEF DESCRIPTION *(Brief scope, size, cost, etc.)* AND SPECIFIC ROLE

Fire, DDC, AHU, Security and Controls installations; Honeywell has done many projects that have been completed or are still ongoing. $5 M. (to date). Account Executive – Service/Install

d.

(1) TITLE AND LOCATION *(City and State)*: **Lake Washington School District, Kirkland, WA**

(2) YEAR COMPLETED — PROFESSIONAL SERVICES: **2010** — CONSTRUCTION *(if applicable)*: **2010**

[X] Check if project performed with current firm

(3) BRIEF DESCRIPTION *(Brief scope, size, cost, etc.)* AND SPECIFIC ROLE

Installed Honeywell DDC Controls integrated with EBI front end. $4.8 M. Account Executive – Service/Install

e.

(1) TITLE AND LOCATION *(City and State)*: **Snoqualmie Valley School District, Snoqualmie, WA**

(2) YEAR COMPLETED — PROFESSIONAL SERVICES: **2010** — CONSTRUCTION *(if applicable)*: **2010**

[X] Check if project performed with current firm

(3) BRIEF DESCRIPTION *(Brief scope, size, cost, etc.)* AND SPECIFIC ROLE

Fire, DDC, Lighthing Upgrade, Controls & Security for the following schools: Opstad Elementary. Chief Kanim, and Mt Si High School. $2 M. Account Executive – Service/Install

E. RESUMES OF KEY PERSONNEL PROPOSED FOR THIS CONTRACT

(Complete one Section E for each person)

12. NAME	13. ROLE IN THIS CONTRACT	14. YEARS EXPEREINCE	
		a. TOTAL	b. WITH CURRENT FIRM
Chris Whelihan	**Project Manager**	**19**	**3**

15. FIRM NAME AND LOCATION *(City and State)*

Honeywell International Inc., Phoenix, AZ

16. EDUCATION *(DEGREE AND SPECIALIZATION)*	17. CURRENT PROFIESSIONAL REGISTRATION *(STATE AND DISCIPLINE)*
BS in Industrial Technology, Construction Management concentration	**N/A**

18. OTHER PROFESSIONAL QUALIFICATIONS *(PUBLICATIONS, ORGANIZATIONS, TRAINING, AWARDS, etc.)*

N/A

19. RELEVANT PROJECTS

a.

(1) TITLE AND LOCATION *(City and State)*

City of Phoenix, Phoenix, AZ

(2) YEAR COMPLETED

PROFESSIONAL SERVICES	CONSTRUCTION *(if applicable)*
2011	**2012**

[X] Check if project performed with current firm

(3) BRIEF DESCRIPTION *(Brief scope, size, cost, etc.)* AND SPECIFIC ROLE

Upgraded to 28W T8 lamps and ballasts and installed occupancy sensors; installed plate & frame heat exchanger to take advantage of "free cooling" during shoulder seasons; reprogrammed existing building controls to incorporate equipment operation; installed wireless pneumatic thermostats and JACE communication router; rebalanced outside airflow through facility; and retrofit HVAC equipment with outside air economizers. $2.3 M. Project Manager (PM).

b.

(1) TITLE AND LOCATION *(City and State)*

Scottsdale USD Solar Thermal Chiller, Scottsdale, AZ

(2) YEAR COMPLETED

PROFESSIONAL SERVICES	CONSTRUCTION *(if applicable)*
2010	**2011**

[X] Check if project performed with current firm

(3) BRIEF DESCRIPTION *(Brief scope, size, cost, etc.)* AND SPECIFIC ROLE

Installed a 500 ton solar absorption chiller, with heat being delivered from 50,000 sq ft of solar thermal panels. $750,000. PM.

c.

(1) TITLE AND LOCATION *(City and State)*

Yuma County/City of Wray, Wray, CO

(2) YEAR COMPLETED

PROFESSIONAL SERVICES	CONSTRUCTION *(if applicable)*
2010	**2010**

[X] Check if project performed with current firm

(3) BRIEF DESCRIPTION *(Brief scope, size, cost, etc.)* AND SPECIFIC ROLE

Interior lighting retrofit; street lighting retrofit; solar-powered pathway lighting; window and door replacements; pool cover (outdoor pool); HVAC and Controls re-commissioning; and installed solar thermal pool heating system. $840,000. PM.

d.

(1) TITLE AND LOCATION *(City and State)*

(2) YEAR COMPLETED

PROFESSIONAL SERVICES	CONSTRUCTION *(if applicable)*

[ ] Check if project performed with current firm

(3) BRIEF DESCRIPTION *(Brief scope, size, cost, etc.)* AND SPECIFIC ROLE

e.

(1) TITLE AND LOCATION *(City and State)*

(2) YEAR COMPLETED

PROFESSIONAL SERVICES	CONSTRUCTION *(if applicable)*

[ ] Check if project performed with current firm

(3) BRIEF DESCRIPTION *(Brief scope, size, cost, etc.)* AND SPECIFIC ROLE

E. RESUMES OF KEY PERSONNEL PROPOSED FOR THIS CONTRACT

(Complete one Section E for each person)

12. NAME	13. ROLE IN THIS CONTRACT	14. YEARS EXPEREINCE	
		a. TOTAL	b. WITH CURRENT FIRM
Fred Miller	**Project Manager**	**20**	**5**

15. FIRM NAME AND LOCATION *(City and State)*

Honeywell International, Inc., Bellevue, WA

16. EDUCATION *(DEGREE AND SPECIALIZATION)*	17. CURRENT PROFIESSIONAL REGISTRATION *(STATE AND DISCIPLINE)*
	N/A

18. OTHER PROFESSIONAL QUALIFICATIONS *(PUBLICATIONS, ORGANIZATIONS, TRAINING, AWARDS, etc.)*

N/A

19. RELEVANT PROJECTS

	(1) TITLE AND LOCATION *(City and State)*	(2) YEAR COMPLETED	
		PROFESSIONAL SERVICES	CONSTRUCTION *(if applicable)*
a.	**Snohomish School District Phase I, Snohomish, WA**	**2010**	**2011**
	(3) BRIEF DESCRIPTION *(Brief scope, size, cost, etc.)* AND SPECIFIC ROLE	[X] Check if project performed with current firm	
	Lighting retrofits, HVAC replacements, controls at six schools. $828,010. Install Project Manager.		
	(1) TITLE AND LOCATION *(City and State)*	(2) YEAR COMPLETED	
		PROFESSIONAL SERVICES	CONSTRUCTION *(if applicable)*
b.	**Snohomish School District Phase II, Snohomish, WA**	**2010**	**2011**
	(3) BRIEF DESCRIPTION *(Brief scope, size, cost, etc.)* AND SPECIFIC ROLE	[X] Check if project performed with current firm	
	Lighting retrofits, HVAC replacements, controls at two schools and M&O facility. $568,428. Install Project Manager.		
	(1) TITLE AND LOCATION *(City and State)*	(2) YEAR COMPLETED	
		PROFESSIONAL SERVICES	CONSTRUCTION *(if applicable)*
c.	**Boeing – Renton Plant, Renton, WA**	**2005**	**2010**
	(3) BRIEF DESCRIPTION *(Brief scope, size, cost, etc.)* AND SPECIFIC ROLE	[X] Check if project performed with current firm	
	Fire, DDC, Controls, Excel 5000 and Security. $14 M. +. Install Project Manager.		
	(1) TITLE AND LOCATION *(City and State)*	(2) YEAR COMPLETED	
		PROFESSIONAL SERVICES	CONSTRUCTION *(if applicable)*
d.	**Lake Washington School District, Kirkland, WA**	**2010**	**2010**
	(3) BRIEF DESCRIPTION *(Brief scope, size, cost, etc.)* AND SPECIFIC ROLE	[X] Check if project performed with current firm	
	Installed Honeywell DDC Controls integrated with EBI front end. $4.8 M. Install Project Manager.		
	(1) TITLE AND LOCATION *(City and State)*	(2) YEAR COMPLETED	
		PROFESSIONAL SERVICES	CONSTRUCTION *(if applicable)*
e.			
	(3) BRIEF DESCRIPTION *(Brief scope, size, cost, etc.)* AND SPECIFIC ROLE	[ ] Check if project performed with current firm	

E. RESUMES OF KEY PERSONNEL PROPOSED FOR THIS CONTRACT

(Complete one Section E for each person)

12. NAME	13. ROLE IN THIS CONTRACT	14. YEARS EXPEREINCE	
		a. TOTAL	b. WITH CURRENT FIRM
Mary Wyand	**Solutions Development Engineer**	**27**	**9.5**

15. FIRM NAME AND LOCATION *(City and State)*

Honeywell International, Inc., Berkeley, CA

16. EDUCATION *(DEGREE AND SPECIALIZATION)*	17. CURRENT PROFIESSIONAL REGISTRATION *(STATE AND DISCIPLINE)*
BS in Mechanical Engineering	**P.E., State of California, Number 26409, Mechanical** **Certified Energy Manager (CEM)**

18. OTHER PROFESSIONAL QUALIFICATIONS *(PUBLICATIONS, ORGANIZATIONS, TRAINING, AWARDS, etc.)*

Six Sigma Greenbelt Certified; LEED 2.1® Accredited Professional; Member, American Society of Heating, Refrigerating, and Air Conditioning Engineers (ASHRAE); Member, Association of Energy Engineers (AEE).

19. RELEVANT PROJECTS

a.

(1) TITLE AND LOCATION *(City and State)*

Alameda County Streetlighting Project, Oakland, CA

(2) YEAR COMPLETED

PROFESSIONAL SERVICES	CONSTRUCTION *(if applicable)*
2011	**2011**

(3) BRIEF DESCRIPTION *(Brief scope, size, cost, etc.)* AND SPECIFIC ROLE

[X] Check if project performed with current firm

Retrofit 6820 existing County-owned fixtures with LED technology. $4.5 M. Solutions Development Engineer (SDE).

b.

(1) TITLE AND LOCATION *(City and State)*

Merced Community College District, Merced, CA

(2) YEAR COMPLETED

PROFESSIONAL SERVICES	CONSTRUCTION *(if applicable)*
2011	**2012**

(3) BRIEF DESCRIPTION *(Brief scope, size, cost, etc.)* AND SPECIFIC ROLE

[X] Check if project performed with current firm

Retrofit interior and exterior lighting, installed a trash compaction system, performed Control System Upgrade to optimize swimming pool operations, installed new rooftop HVAC units with DX cooling, retrofit and improved economizer damper actuators to allow "free cooling" mode, replaced pneumatic actuators and compressor with electric actuators, replace pneumatic gym hot water valves with more reliable electric valves, and performed Central plant controls optimization by re-commissioning chiller and heat exchanger controls and replacing pneumatic control systems with electronic controls and improved control strategies.$3.1 M. SDE.

c.

(1) TITLE AND LOCATION *(City and State)*

City of Antioch Street Lighting Project, Antioch, CA

(2) YEAR COMPLETED

PROFESSIONAL SERVICES	CONSTRUCTION *(if applicable)*
2010	**2011**

[X] Check if project performed with current firm

(3) BRIEF DESCRIPTION *(Brief scope, size, cost, etc.)* AND SPECIFIC ROLE

Retrofit existing building fluorescent lights with T-8 lighting, retrofit HID street lights and HID park and site pole lighting with induction lighting. $4.7 M. SDE.

d.

(1) TITLE AND LOCATION *(City and State)*

Solano County PV project, Fairfield, CA

(2) YEAR COMPLETED

PROFESSIONAL SERVICES	CONSTRUCTION *(if applicable)*
2008	**2008**

(3) BRIEF DESCRIPTION *(Brief scope, size, cost, etc.)* AND SPECIFIC ROLE

[X] Check if project performed with current firm

Designed and installed an 865 kW DC ground-mounted, non-penetrating PV system consisting of 2,792 ASE 310 watt PV modules, custom ground mount and busport mounted racking systems, (3) Xantrex 250 kW grid-tied inverters. $10.2 M. SDE.

e.

(1) TITLE AND LOCATION *(City and State)*

Riverdale USD Phases I and II PV project, Riverdale, CA

(2) YEAR COMPLETED

PROFESSIONAL SERVICES	CONSTRUCTION *(if applicable)*
2008	**2008**

[X] Check if project performed with current firm

(3) BRIEF DESCRIPTION *(Brief scope, size, cost, etc.)* AND SPECIFIC ROLE

Designed and installed two single-axis tracking PV systems, one rated at 415 kW AC, and one rated at 190 kW AC PV System as a second phase. $8.0 M. SDE.

E. RESUMES OF KEY PERSONNEL PROPOSED FOR THIS CONTRACT

(Complete one Section E for each person)

12. NAME	13. ROLE IN THIS CONTRACT	14. YEARS EXPEREINCE	
		a. TOTAL	b. WITH CURRENT FIRM
Kevin Cross	**Solutions Development Engineer**	**16**	**7**

15. FIRM NAME AND LOCATION *(City and State)*

Honeywell International, Fort Collins, CO

16. EDUCATION *(DEGREE AND SPECIALIZATION)*	17. CURRENT PROFIESSIONAL REGISTRATION *(STATE AND DISCIPLINE)*
MS. degree in Mechanical Engineering **B.S. degree in Physics**	**P.E., State of Colorado, Number 37292** **Certified Energy Manager (CEM)** **Certified Indoor Air Quality Professional (CIAQP)**

18. OTHER PROFESSIONAL QUALIFICATIONS *(PUBLICATIONS, ORGANIZATIONS, TRAINING, AWARDS, etc.)*

LEED® 2.0 Accredited Professional; Six Sigma Greenbelt Certified; Member, ASHRAE; Member, AEE; Member, American Solar Energy Society (ASES); Associate Member, Illuminating Engineering Society of North America (IESNA).

19. RELEVANT PROJECTS

a.

(1) TITLE AND LOCATION *(City and State)*

Yuma County/City of Wray, Wray, CO

(2) YEAR COMPLETED

PROFESSIONAL SERVICES	CONSTRUCTION *(if applicable)*
2010	**2010**

[X] Check if project performed with current firm

(3) BRIEF DESCRIPTION *(Brief scope, size, cost, etc.)* AND SPECIFIC ROLE

Interior lighting retrofit; street lighting retrofit; solar-powered pathway lighting; window and door replacements; pool cover (outdoor pool); HVAC and Controls re-commissioning; and installed solar thermal pool heating system. $840,000. Solutions Development Engineer (SDE).

b.

(1) TITLE AND LOCATION *(City and State)*

Peetz School District, Peetz CO

(2) YEAR COMPLETED

PROFESSIONAL SERVICES	CONSTRUCTION *(if applicable)*
2011	**2012**

[X] Check if project performed with current firm

(3) BRIEF DESCRIPTION *(Brief scope, size, cost, etc.)* AND SPECIFIC ROLE

HVAC upgrades; control system upgrades; and building envelope improvements. $1.3 M. SDE.

c.

(1) TITLE AND LOCATION *(City and State)*

Pueblo School District Ph I and II, Pueblo, CO

(2) YEAR COMPLETED

PROFESSIONAL SERVICES	CONSTRUCTION *(if applicable)*
2010	**2011**

[X] Check if project performed with current firm

(3) BRIEF DESCRIPTION *(Brief scope, size, cost, etc.)* AND SPECIFIC ROLE

Phase I: Controls system upgrade; RTU economizer re-commissioning; and Lighting system upgrade.
Phase II: Boiler replacement; pool boiler replacement; cooling tower replacement; HVAC equipment installation; RTU capability upgrades; controls system upgrade; RTU economizer re-commissioning; lighting system upgrade; pool filter and pump replacement. Ph I:$ 2,765448; Ph II: $3.2 M. SDE.

d.

(1) TITLE AND LOCATION *(City and State)*

Lamar Community College, Lamar, CO

(2) YEAR COMPLETED

PROFESSIONAL SERVICES	CONSTRUCTION *(if applicable)*
2011	**2012**

[X] Check if project performed with current firm

(3) BRIEF DESCRIPTION *(Brief scope, size, cost, etc.)* AND SPECIFIC ROLE

Condensing boilers; variable speed chillers; DDC Controls; demand control ventilation; occupancy sensors; occupancy setbacks and ventilation controls; variable speed pumping and kitchen hood controls; T8 lighting; high-efficiency dry type transformers; exhaust recovery ventilators; fan coil units; and unit ventilators. $3.1 M. SDE.

e.

(1) TITLE AND LOCATION *(City and State)*

El Paso County, Colorado Springs, CO

(2) YEAR COMPLETED

PROFESSIONAL SERVICES	CONSTRUCTION *(if applicable)*
2010	**2011**

[X] Check if project performed with current firm

(3) BRIEF DESCRIPTION *(Brief scope, size, cost, etc.)* AND SPECIFIC ROLE

Heating system upgrade; cooling system upgrade; and chiller installation. $2.9 M. SDE.

E. RESUMES OF KEY PERSONNEL PROPOSED FOR THIS CONTRACT

(Complete one Section E for each person)

12. NAME	13. ROLE IN THIS CONTRACT	14. YEARS EXPEREINCE	
		a. TOTAL	b. WITH CURRENT FIRM
Justin Rundle	**Solutions Development Engineer**	**25**	**3**

15. FIRM NAME AND LOCATION *(City and State)*

Honeywell International, Phoenix, AZ

16. EDUCATION *(DEGREE AND SPECIALIZATION)*

MBA,1989
MS in Industrial Engineering, 1989
BS in Mechanical Engineering, 1984

17. CURRENT PROFIESSIONAL REGISTRATION *(STATE AND DISCIPLINE)*

P.E., State of Arizona, #39899 (mechanical) and 47956 (civil)
P.E., State of New Mexico, #16988
P.E., State of Texas, # 97804
P.E., State of Michigan, #41889
P.E., State of Kentucky, #18344
Licensed Class "A" General Contractor, AZ, # ROC220055
Certified Energy Manager (CEM); **Certified Construction Manager (CCM)**; **Certified Construction Contract Administrator (CCCA)**; **Grade 4 Operator in Arizona for Water/Wastewater plants**

18. OTHER PROFESSIONAL QUALIFICATIONS *(PUBLICATIONS, ORGANIZATIONS, TRAINING, AWARDS, etc.)*

LEED® 2.0 Accredited Professional; Arbitrator for the American Arbitration Association; Member, Construction Management Association of America; Member, Project Management Institute (PMI).

19. RELEVANT PROJECTS

a.

(1) TITLE AND LOCATION *(City and State)*: **City of Phoenix Performance Contract, Phoenix, AZ**

(2) YEAR COMPLETED — PROFESSIONAL SERVICES: **2011** — CONSTRUCTION *(if applicable)*: **2012**

(3) BRIEF DESCRIPTION *(Brief scope, size, cost, etc.)* AND SPECIFIC ROLE — [X] Check if project performed with current firm

New lighting, HVAC equipment, HVAC controls, etc. at libraries, police stations, fire stations, etc. for a the City of Phoenix Building Services department. $2.4 M. SDE.

b.

(1) TITLE AND LOCATION *(City and State)*: **Merced Community College Performance Contract, Merced, CA**

(2) YEAR COMPLETED — PROFESSIONAL SERVICES: **2011** — CONSTRUCTION *(if applicable)*: **2012**

(3) BRIEF DESCRIPTION *(Brief scope, size, cost, etc.)* AND SPECIFIC ROLE — [X] Check if project performed with current firm

Lighting, HVAC equipment, HVAC retro-commissioning, controls, pool improvements, etc. for community college in California. $3.1 M. SDE.

c.

(1) TITLE AND LOCATION *(City and State)*: **Monterrey County Energy Improvements Contract, Monterrey, CA**

(2) YEAR COMPLETED — PROFESSIONAL SERVICES: **2011** — CONSTRUCTION *(if applicable)*: **2012**

(3) BRIEF DESCRIPTION (Brief scope, size, cost, etc.) AND SPECIFIC ROLE — [X] Check if project performed with current firm

ARRA funded energy improvements contract for HVAC upgrades. $1.0 M. SDE.

d.

(1) TITLE AND LOCATION *(City and State)*: **City of Lamar Energy Performance Contract, Lamar, CO**

(2) YEAR COMPLETED — PROFESSIONAL SERVICES: **2012** — CONSTRUCTION *(if applicable)*: **In progress**

(3) BRIEF DESCRIPTION (Brief scope, size, cost, etc.) AND SPECIFIC ROLE — [X] Check if project performed with current firm

Well field improvements which inlcuded replacing 13 wells, installing two pipelines, and replacing the SCADA system. $1.3 M. SDE.

e.

(1) TITLE AND LOCATION *(City and State)*: **East Valley Water District Project Development, Highland, CA**

(2) YEAR COMPLETED — PROFESSIONAL SERVICES: **2013** — CONSTRUCTION *(if applicable)*: **N/A**

(3) BRIEF DESCRIPTION *(Brief scope, size, cost, etc.)* AND SPECIFIC ROLE — [X] Check if project performed with current firm

Developing water district improvements project to include operating equipment at non-peak hours, rate schedule adjustment, pump replacement, power factor correction, etc. $4.5 M. SDE.

E. RESUMES OF KEY PERSONNEL PROPOSED FOR THIS CONTRACT

(Complete one Section E for each person)

12. NAME	13. ROLE IN THIS CONTRACT	14. YEARS EXPEREINCE	
		a. TOTAL	b. WITH CURRENT FIRM
Shoko Imamura	**Solutions Development Engineer**	**4**	**2**

15. FIRM NAME AND LOCATION *(City and State)*

Honeywell International, Inc Bellevue, WA

16. EDUCATION *(DEGREE AND SPECIALIZATION)*	17. CURRENT PROFIESSIONAL REGISTRATION *(STATE AND DISCIPLINE)*
BS in Chemical Engineering, 2008	**N/A**

18. OTHER PROFESSIONAL QUALIFICATIONS *(PUBLICATIONS, ORGANIZATIONS, TRAINING, AWARDS, etc.)*

Member, Association of Energy Engineers (AEE).

19. RELEVANT PROJECTS

a.

(1) TITLE AND LOCATION *(City and State)*

Snohomish School District Phase I, Snohomish, WA

(2) YEAR COMPLETED

PROFESSIONAL SERVICES	CONSTRUCTION *(if applicable)*
2010	**2010**

[X] Check if project performed with current firm

(3) BRIEF DESCRIPTION *(Brief scope, size, cost, etc.)* AND SPECIFIC ROLE

Lighting upgrades, controls upgrades, and HVAC improvements (heat pumps) at 5 Elementary schools and one district facility. $828,010. Performance Contracting Engineer (PCE).

b.

(1) TITLE AND LOCATION *(City and State)*

Snohomish School District Phase II, Snohomish, WA

(2) YEAR COMPLETED

PROFESSIONAL SERVICES	CONSTRUCTION *(if applicable)*
2010	**2011**

[X] Check if project performed with current firm

(3) BRIEF DESCRIPTION *(Brief scope, size, cost, etc.)* AND SPECIFIC ROLE

Lighting upgrades, controls upgrades, and HVAC improvements (heat pumps) at 2 Elementary schools and M&O facility. $568,428. PCE.

c.

(1) TITLE AND LOCATION *(City and State)*

City of Walla Walla Phase II, Walla Walla, WA

(2) YEAR COMPLETED

PROFESSIONAL SERVICES	CONSTRUCTION *(if applicable)*
2010	**2011**

[X] Check if project performed with current firm

(3) BRIEF DESCRIPTION *(Brief scope, size, cost, etc.)* AND SPECIFIC ROLE

Lighting Retrofit - Replaced high-pressure sodium discharge lamps with more energy-efficient induction technology lamps. $328,672. PCE.

d.

(1) TITLE AND LOCATION *(City and State)*

Peninsula College, Port Angeles, WA,

(2) YEAR COMPLETED

PROFESSIONAL SERVICES	CONSTRUCTION *(if applicable)*
2009	**N/A**

[ ] Check if project performed with current firm

(3) BRIEF DESCRIPTION *(Brief scope, size, cost, etc.)* AND SPECIFIC ROLE

Technical Energy Audit

e.

(1) TITLE AND LOCATION *(City and State)*

Fairbanks Memorial Hospital, Fairbanks, AK,

(2) YEAR COMPLETED

PROFESSIONAL SERVICES	CONSTRUCTION *(if applicable)*
2009	**N/A**

[ ] Check if project performed with current firm

(3) BRIEF DESCRIPTION *(Brief scope, size, cost, etc.)* AND SPECIFIC ROLE

Energy Master Plan Development

E. RESUMES OF KEY PERSONNEL PROPOSED FOR THIS CONTRACT

(Complete one Section E for each person)

12. NAME	13. ROLE IN THIS CONTRACT	14. YEARS EXPEREINCE	
		a. TOTAL	b. WITH CURRENT FIRM
Amy Cho	**Energy Analyst**	**13**	**1**

15. FIRM NAME AND LOCATION *(City and State)*

Honeywell, Bellevue, WA

16. EDUCATION *(DEGREE AND SPECIALIZATION)*	17. CURRENT PROFIESSIONAL REGISTRATION *(STATE AND DISCIPLINE)*
South Seattle Community College, Building Sciences	**N/A**

18. OTHER PROFESSIONAL QUALIFICATIONS *(PUBLICATIONS, ORGANIZATIONS, TRAINING, AWARDS, etc.)*

Best Energy Management Western US (2008), Association of Energy Engineers (AEE)
Certified Energy Manager, Association of Energy Engineers (CEM/AEE)
South Seattle Community College Certifications, Commercial Energy Auditing, Building Commissioning, Control Theory, Energy Policy

19. RELEVANT PROJECTS

	(1) TITLE AND LOCATION *(City and State)*	(2) YEAR COMPLETED	
		PROFESSIONAL SERVICES	CONSTRUCTION *(if applicable)*
a.	**T-Mobile Retrofit/Upgrade, Bothel, WA**	**2007**	**2007**
	(3) BRIEF DESCRIPTION *(Brief scope, size, cost, etc.)* AND SPECIFIC ROLE	☐ Check if project performed with current firm	
	Lighting, HVAC and Controls Upgrade for a switching center. $600,000. Energy Analyst		
	(1) TITLE AND LOCATION *(City and State)*	(2) YEAR COMPLETED	
		PROFESSIONAL SERVICES	CONSTRUCTION *(if applicable)*
b.	**T-Mobile Playground Store, Isaaquah, WA**	**2007**	**2008**
	(3) BRIEF DESCRIPTION *(Brief scope, size, cost, etc.)* AND SPECIFIC ROLE	☐ Check if project performed with current firm	
	Lighting and Controls upgrades for 5 stores designed as prototypes to appeal to consumers and consume less energy than previous designs. Each project: $40,000 in additional construction. Energy Analyst		
	(1) TITLE AND LOCATION *(City and State)*	(2) YEAR COMPLETED	
		PROFESSIONAL SERVICES	CONSTRUCTION *(if applicable)*
c.	**T-Mobile Bellevue Office, Bellevue WA**	**2008**	**2009**
	(3) BRIEF DESCRIPTION *(Brief scope, size, cost, etc.)* AND SPECIFIC ROLE	☐ Check if project performed with current firm	
	Lighting controls upgrades for the T-Mobile campus in Bellevue WA, Energy Analyst		
	(1) TITLE AND LOCATION *(City and State)*	(2) YEAR COMPLETED	
		PROFESSIONAL SERVICES	CONSTRUCTION *(if applicable)*
d.	**T-Mobile Datacenter, Bothel, WA**	**2007**	**2008**
	(3) BRIEF DESCRIPTION *(Brief scope, size, cost, etc.)* AND SPECIFIC ROLE	☐ Check if project performed with current firm	
	Lighting, HVAC and Controls Installation, $800,000, Energy Analyst		
	(1) TITLE AND LOCATION *(City and State)*	(2) YEAR COMPLETED	
		PROFESSIONAL SERVICES	CONSTRUCTION *(if applicable)*
e.			
	(3) BRIEF DESCRIPTION *(Brief scope, size, cost, etc.)* AND SPECIFIC ROLE	☐ Check if project performed with current firm	

E. RESUMES OF KEY PERSONNEL PROPOSED FOR THIS CONTRACT

(Complete one Section E for each person)

12. NAME	13. ROLE IN THIS CONTRACT	14. YEARS EXPEREINCE	
		a. TOTAL	b. WITH CURRENT FIRM
Terry Johnson	**Engineering Estimator**	**35**	**35**

15. FIRM NAME AND LOCATION *(City and State)*

Honeywell International, Inc Bellevue, WA

16. EDUCATION *(DEGREE AND SPECIALIZATION)*	17. CURRENT PROFIESSIONAL REGISTRATION *(STATE AND DISCIPLINE)*
Associates Degree in Electronics Technology 1977, Anchorage Community College	**N/A**

18. OTHER PROFESSIONAL QUALIFICATIONS *(PUBLICATIONS, ORGANIZATIONS, TRAINING, AWARDS, etc.)*

N/A

19. RELEVANT PROJECTS

a.

(1) TITLE AND LOCATION *(City and State)*

Snohomish School District Phase I, Snohomish, WA

(2) YEAR COMPLETED

PROFESSIONAL SERVICES	CONSTRUCTION *(if applicable)*
2010	**2010**

[X] Check if project performed with current firm

(3) BRIEF DESCRIPTION *(Brief scope, size, cost, etc.)* AND SPECIFIC ROLE

Lighting retrofits, HVAC replacements, controls at six schools. $828,010. Engineering Estimator.

b.

(1) TITLE AND LOCATION *(City and State)*

Snohomish School District Phase II, Snohomish, WA

(2) YEAR COMPLETED

PROFESSIONAL SERVICES	CONSTRUCTION *(if applicable)*
2010	**2011**

[X] Check if project performed with current firm

(3) BRIEF DESCRIPTION *(Brief scope, size, cost, etc.)* AND SPECIFIC ROLE

Lighting retrofits, HVAC replacements, controls at two schools and M&O facility. $568,428. Engineering Estimator.

c.

(1) TITLE AND LOCATION *(City and State)*

Boeing – Renton Plant, Renton, WA

(2) YEAR COMPLETED

PROFESSIONAL SERVICES	CONSTRUCTION *(if applicable)*
2005	**2010**

[X] Check if project performed with current firm

(3) BRIEF DESCRIPTION *(Brief scope, size, cost, etc.)* AND SPECIFIC ROLE

Fire, DDC, AHU, Security and Controls installations; Honeywell has done many projects that have been completed or are still ongoing. $5 M. (to date). Engineering Estimator.

d.

(1) TITLE AND LOCATION *(City and State)*

Lake Washington School District, Kirkland, WA

(2) YEAR COMPLETED

PROFESSIONAL SERVICES	CONSTRUCTION *(if applicable)*
2010	**2010**

[X] Check if project performed with current firm

(3) BRIEF DESCRIPTION *(Brief scope, size, cost, etc.)* AND SPECIFIC ROLE

Installed Honeywell DDC Controls integrated with EBI front end. $4.8 M. Engineering Estimator.

e.

(1) TITLE AND LOCATION *(City and State)*

Snoqualmie Valley School District, Snoqualmie, WA

(2) YEAR COMPLETED

PROFESSIONAL SERVICES	CONSTRUCTION *(if applicable)*
2010	**2010**

[X] Check if project performed with current firm

(3) BRIEF DESCRIPTION *(Brief scope, size, cost, etc.)* AND SPECIFIC ROLE

Fire, DDC, Lighting Upgrade, Controls & Security for the following schools: Opstad Elementary. Chief Kanim, and Mt Si High School. $2 M. Engineering Estimator.

E. RESUMES OF KEY PERSONNEL PROPOSED FOR THIS CONTRACT

(Complete one Section E for each person)

12. NAME	13. ROLE IN THIS CONTRACT	14. YEARS EXPEREINCE	
		a. TOTAL	b. WITH CURRENT FIRM
Aamer Athar	**Measurement and Verification (M&V) Lead**	**20**	**11**

15. FIRM NAME AND LOCATION *(City and State)*

Honeywell International, Inc Pawtucket, RI

16. EDUCATION *(DEGREE AND SPECIALIZATION)*	17. CURRENT PROFIESSIONAL REGISTRATION *(STATE AND DISCIPLINE)*
MBA in Global Energy Management, 2007 **MS in Mechanical Engineering, 1990** **BS in Mechanical Engineering, 1988**	**PE Texas, No. 85375, Mechanical** **PE Arkansas, No. 13550, Mechanical**

18. OTHER PROFESSIONAL QUALIFICATIONS *(PUBLICATIONS, ORGANIZATIONS, TRAINING, AWARDS, etc.)*

Certified Carbon Reduction Manager (CRM).

19. RELEVANT PROJECTS

	(1) TITLE AND LOCATION *(City and State)*	(2) YEAR COMPLETED	
		PROFESSIONAL SERVICES	CONSTRUCTION *(if applicable)*
a.	**Conducts Measurement & Verification for ESPC Contracts in the West**		
	(3) BRIEF DESCRIPTION *(Brief scope, size, cost, etc.)* AND SPECIFIC ROLE	☐ Check if project performed with current firm	
b.	(1) TITLE AND LOCATION *(City and State)*	(2) YEAR COMPLETED	
		PROFESSIONAL SERVICES	CONSTRUCTION *(if applicable)*
	N/A		
	(3) BRIEF DESCRIPTION *(Brief scope, size, cost, etc.)* AND SPECIFIC ROLE	☐ Check if project performed with current firm	
c.	(1) TITLE AND LOCATION *(City and State)*	(2) YEAR COMPLETED	
		PROFESSIONAL SERVICES	CONSTRUCTION *(if applicable)*
	N/A		
	(3) BRIEF DESCRIPTION *(Brief scope, size, cost, etc.)* AND SPECIFIC ROLE	☐ Check if project performed with current firm	
d.	(1) TITLE AND LOCATION *(City and State)*	(2) YEAR COMPLETED	
		PROFESSIONAL SERVICES	CONSTRUCTION *(if applicable)*
	N/A		
	(3) BRIEF DESCRIPTION *(Brief scope, size, cost, etc.)* AND SPECIFIC ROLE	☐ Check if project performed with current firm	
e.	(1) TITLE AND LOCATION *(City and State)*	(2) YEAR COMPLETED	
		PROFESSIONAL SERVICES	CONSTRUCTION *(if applicable)*
	N/A		
	(3) BRIEF DESCRIPTION *(Brief scope, size, cost, etc.)* AND SPECIFIC ROLE	☐ Check if project performed with current firm	

F. EXAMPLE PROJECTS WHICH BEST ILLUSTRATE PROPOSED TEAM'S QUALIFICATIONS FOR THIS CONTRACT *(Present as many projects as requested by the agency, or 10 projects, if not specified. Complete one Section F for each project.)*		D. EXAMPLE PROJECT KEY NUMBER **1**
E. TITLE AND LOCATION (City and State) **City of Walla Walla Phase I, Walla Walla, WA**	YEAR COMPLETED F. PROFESSIONAL SERVICES **2006**	G. CONSTRUCTION *(if applicable)* **2007**

23. PROJECT OWNER'S INFORMATION

a. PROJECT OWNER	b. POINT OF CONTACT NAME	c. PROJECT OWNER
City of Walla Walla	**Tom Purcell** **Public Works Director**	**(509) 527-4463**

24. BRIEF DESCRIPTION OF PROJECT AND RELEVANCE TO THIS CONTRACT *(include scope, size, and cost.)*

Retrofit lights at 56 Intersections, for a total of:

- **144 new McCain clamshell pedestrian signals**
- **Total of 1629 LED modules:**
  - **Qty. 543 12-inch ball**
  - **Qty. 586 8-inch ball**
  - **Qty. 124 3M programmable view ball**
  - **Qty. 29 12-inch arrow ball**
  - **Qty. 347 16" x 18" side-by-side pedestrian signals.**

Project cost: $370,218

25. FIRMS FROM SECTION C INVOLVED IN THIS PROJECT

	(1) FIRM NAME	(2) FIRM LOCATION *(City and State)*	(3) ROLE
a.	**N/A**		
b.			
c.			
d.			
e.			
f.			

F. EXAMPLE PROJECTS WHICH BEST ILLUSTRATE PROPOSED TEAM'S QUALIFICATIONS FOR THIS CONTRACT *(Present as many projects as requested by the agency, or 10 projects, if not specified. Complete one Section F for each project.)*		D. EXAMPLE PROJECT KEY NUMBER **2**
E. TITLE AND LOCATION (City and State)	YEAR COMPLETED	
	F. PROFESSIONAL SERVICES	G. CONSTRUCTION *(if applicable)*
City of Walla Walla Phase II, Walla Walla, WA	**2010**	**2011**

23. PROJECT OWNER'S INFORMATION		
a. PROJECT OWNER	b. POINT OF CONTACT NAME	c. PROJECT OWNER
City of Walla Walla	**Tom Purcell** **Public Works Director**	**(509) 527-4463**

25. BRIEF DESCRIPTION OF PROJECT AND RELEVANCE TO THIS CONTRACT *(include scope, size, and cost.)*

- **Lighting Retrofit - Replaced high-pressure sodium discharge lamps with more energy-efficient induction technology lamps**

Project Cost: $328,672

25. FIRMS FROM SECTION C INVOLVED IN THIS PROJECT			
a.	(1) FIRM NAME **N/A**	(2) FIRM LOCATION *(City and State)*	(3) ROLE
b.	(1) FIRM NAME	(2) FIRM LOCATION *(City and State)*	(3) ROLE
c.	(1) FIRM NAME	(2) FIRM LOCATION *(City and State)*	(3) ROLE
d.	(1) FIRM NAME	(2) FIRM LOCATION *(City and State)*	(3) ROLE
e.	(1) FIRM NAME	(2) FIRM LOCATION *(City and State)*	(3) ROLE
f.	(1) FIRM NAME	(2) FIRM LOCATION *(City and State)*	(3) ROLE

F. EXAMPLE PROJECTS WHICH BEST ILLUSTRATE PROPOSED TEAM'S QUALIFICATIONS FOR THIS CONTRACT *(Present as many projects as requested by the agency, or 10 projects, if not specified. Complete one Section F for each project.)*		D. EXAMPLE PROJECT KEY NUMBER **3**
E. TITLE AND LOCATION (City and State) **Snohomish School District Phase I, Snohomish, WA**	YEAR COMPLETED F. PROFESSIONAL SERVICES **2010**	G. CONSTRUCTION *(if applicable)* **2010**

23. PROJECT OWNER'S INFORMATION		
a. PROJECT OWNER **Snohomish School District**	b. POINT OF CONTACT NAME **Ralph Rohwer, Director of Facilities**	c. POINT OF CONTACT TELEPHONE NUMBER **(360) 563-3532**

26. BRIEF DESCRIPTION OF PROJECT AND RELEVANCE TO THIS CONTRACT *(include scope, size, and cost.)*

Installed ECMs at five Elementary schools and one district facility:

- **Lighting Upgrades**
- **Controls Upgrades**
- **HVAC Improvements (Heat Pumps)**

Project also involved M&V, and ongoing service.

Project cost: $828,010

25. FIRMS FROM SECTION C INVOLVED IN THIS PROJECT

	(1) FIRM NAME	(2) FIRM LOCATION *(City and State)*	(3) ROLE
a.	**N/A**		
b.			
c.			
d.			
e.			
f.			

F. EXAMPLE PROJECTS WHICH BEST ILLUSTRATE PROPOSED TEAM'S QUALIFICATIONS FOR THIS CONTRACT *(Present as many projects as requested by the agency, or 10 projects, if not specified. Complete one Section F for each project.)*		D. EXAMPLE PROJECT KEY NUMBER **4**
E. TITLE AND LOCATION (City and State) **Snohomish School District Phase II, Snohomish, WA**	YEAR COMPLETED F. PROFESSIONAL SERVICES **2010**	G. CONSTRUCTION *(if applicable)* **2011**

23. PROJECT OWNER'S INFORMATION		
a. PROJECT OWNER **Snohomish School District**	b. POINT OF CONTACT NAME **Ralph Rohwer, Director of Facilities**	c. POINT OF CONTACT TELEPHONE NUMBER **(360) 563-3532**

27. BRIEF DESCRIPTION OF PROJECT AND RELEVANCE TO THIS CONTRACT *(include scope, size, and cost.)*

Installed ECMs at two Elementary schools and one district facility:

- **Lighting Upgrades**
- **Controls Upgrades**
- **HVAC Improvements (Heat Pumps)**

Project also involved M&V, and ongoing service.

Project cost: $568,428

25. FIRMS FROM SECTION C INVOLVED IN THIS PROJECT			
a.	(1) FIRM NAME **N/A**	(2) FIRM LOCATION *(City and State)*	(3) ROLE
b.	(1) FIRM NAME	(2) FIRM LOCATION *(City and State)*	(3) ROLE
c.	(1) FIRM NAME	(2) FIRM LOCATION *(City and State)*	(3) ROLE
d.	(1) FIRM NAME	(2) FIRM LOCATION *(City and State)*	(3) ROLE
e.	(1) FIRM NAME	(2) FIRM LOCATION *(City and State)*	(3) ROLE
f.	(1) FIRM NAME	(2) FIRM LOCATION *(City and State)*	(3) ROLE

F. EXAMPLE PROJECTS WHICH BEST ILLUSTRATE PROPOSED TEAM'S QUALIFICATIONS FOR THIS CONTRACT *(Present as many projects as requested by the agency, or 10 projects, if not specified. Complete one Section F for each project.)*		D. EXAMPLE PROJECT KEY NUMBER **5**
E. TITLE AND LOCATION (City and State)	YEAR COMPLETED	
	F. PROFESSIONAL SERVICES	G. CONSTRUCTION *(if applicable)*
City of Phoenix, Phoenix, AZ	**2011**	**2012**

23. PROJECT OWNER'S INFORMATION

a. PROJECT OWNER	b. POINT OF CONTACT NAME	c. POINT OF CONTACT TELEPHONE NUMBER
City of Phoenix	**Neil Mann** **Director of Public Works**	**(602) 262-4820**

24. BRIEF DESCRIPTION OF PROJECT AND RELEVANCE TO THIS CONTRACT *(include scope, size, and cost.)*

- **Upgraded to 28W T8 lamps and ballasts, T5HO lamps, install occupancy sensors, LED exit signs and lamps and CFLs**
- **Installed a plate & frame heat exchanger to take advantage of "free cooling" during shoulder seasons**
- **Reprogramed existing building controls to incorporate equipment operation with occupancy schedules**
- **Installed wireless pneumatic thermostats and JACE communication router for better occupancy control**
- **Rebalanced outside airflow through facility to better match occupancy**
- **Retrofit HVAC equipment with outside air economizers**
- **M&V**

Project Cost: $2,266,834

25. FIRMS FROM SECTION C INVOLVED IN THIS PROJECT

	(1) FIRM NAME	(2) FIRM LOCATION *(City and State)*	(3) ROLE
a.	**N/A**		
b.			
c.			
d.			
e.			
f.			

F. EXAMPLE PROJECTS WHICH BEST ILLUSTRATE PROPOSED TEAM'S QUALIFICATIONS FOR THIS CONTRACT *(Present as many projects as requested by the agency, or 10 projects, if not specified. Complete one Section F for each project.)*		D. EXAMPLE PROJECT KEY NUMBER **6**
E. TITLE AND LOCATION (City and State)	YEAR COMPLETED	
	F. PROFESSIONAL SERVICES	G. CONSTRUCTION *(if applicable)*
Lamar Community College, Lamar, CO	**2011**	**2012**

23. PROJECT OWNER'S INFORMATION

a. PROJECT OWNER	b. POINT OF CONTACT NAME	c. POINT OF CONTACT TELEPHONE NUMBER
Lamar Community College	**Sean Lirley** **Director of Facilities Management**	**(719) 336-1543**

24. BRIEF DESCRIPTION OF PROJECT AND RELEVANCE TO THIS CONTRACT *(include scope, size, and cost.)*

- **Condensing Boilers**
- **Variable Speed Chillers**
- **DDC Controls**
- **Demand Control Ventilation**
- **Occupancy Sensors**
- **Occupancy setback**
- **Occupancy ventilation control**
- **Variable speed pumping**
- **Variable speed kitchen hood controls**
- **T8 Lighting**
- **High Efficiency Dry Type Transformers**
- **Exhaust Recover Ventilators**
- **Fan Coil Units**
- **Unit Ventilators**
- **M&V services**

Project Cost: $3,136,989

25. FIRMS FROM SECTION C INVOLVED IN THIS PROJECT

	(1) FIRM NAME	(2) FIRM LOCATION *(City and State)*	(3) ROLE
a.	**N/A**		
b.			
c.			
d.			
e.			
f.			

F. EXAMPLE PROJECTS WHICH BEST ILLUSTRATE PROPOSED TEAM'S QUALIFICATIONS FOR THIS CONTRACT *(Present as many projects as requested by the agency, or 10 projects, if not specified. Complete one Section F for each project.)*		D. EXAMPLE PROJECT KEY NUMBER **7**
E. TITLE AND LOCATION (City and State) **City of Antioch Street Lighting, Antioch, CA**	YEAR COMPLETED F. PROFESSIONAL SERVICES **2010**	G. CONSTRUCTION *(if applicable)* **2010**

23. PROJECT OWNER'S INFORMATION

a. PROJECT OWNER	b. POINT OF CONTACT NAME	c. POINT OF CONTACT TELEPHONE NUMBER
City of Antioch	**Ron Bernal, P.E.** **Director of Public Works**	**(925) 779-6820**

28. BRIEF DESCRIPTION OF PROJECT AND RELEVANCE TO THIS CONTRACT *(include scope, size, and cost.)*

- **Retrofit 7,797 existing, City-owned HID street lights with induction lighting.**
- **Retrofit 677 existing, City-owned HID park and site pole lights with induction lighting.**
- **Retrofit existing building fluorescent lights with T-8 lighting.**

Project cost: $4,650,000

25. FIRMS FROM SECTION C INVOLVED IN THIS PROJECT

	(1) FIRM NAME	(2) FIRM LOCATION *(City and State)*	(3) ROLE
a.	**N/A**		
b.			
c.			
d.			
e.			
f.			

F. EXAMPLE PROJECTS WHICH BEST ILLUSTRATE PROPOSED TEAM'S QUALIFICATIONS FOR THIS CONTRACT *(Present as many projects as requested by the agency, or 10 projects, if not specified. Complete one Section F for each project.)*			20. EXAMPLE PROJECT KEY NUMBER **8**
21. TITLE AND LOCATION (City and State)	22. YEAR COMPLETED		
	PROFESSIONAL SERVICES	CONSTRUCTION *(if applicable)*	
County of Alameda Streetlighting Project, Oakland, CA	**2011**	**2011**	

23. PROJECT OWNER'S INFORMATION

a. PROJECT OWNER	b. POINT OF CONTACT NAME	c. POINT OF CONTACT TELEPHONE NUMBER
County of Alameda	**Bill Lepere** **City Deputy Director of Construction**	**(510) 670-5431**

24. BRIEF DESCRIPTION OF PROJECT AND RELEVANCE TO THIS CONTRACT *(include scope, size, and cost.)*

- **Replaced existing high pressure sodium street lights with LED street lights.**

Project cost: $4,500,000

25. FIRMS FROM SECTION C INVOLVED IN THIS PROJECT

	(1) FIRM NAME	(2) FIRM LOCATION *(City and State)*	(3) ROLE
a.	**N/A**		
b.			
c.			
d.			
e.			
f.			

F. EXAMPLE PROJECTS WHICH BEST ILLUSTRATE PROPOSED TEAM'S QUALIFICATIONS FOR THIS CONTRACT *(Present as many projects as requested by the agency, or 10 projects, if not specified. Complete one Section F for each project.)*			20. EXAMPLE PROJECT KEY NUMBER **9**
21. TITLE AND LOCATION (City and State)	22. YEAR COMPLETED		
	PROFESSIONAL SERVICES	CONSTRUCTION *(if applicable)*	
City of Perris Solar and ESPC	**2007**	**2007**	

23. PROJECT OWNER'S INFORMATION

a. PROJECT OWNER	b. POINT OF CONTACT NAME	c. POINT OF CONTACT TELEPHONE NUMBER
City of Perris	**Ron Carr** **Director of Finance**	**(951) 943-4610**

24. BRIEF DESCRIPTION OF PROJECT AND RELEVANCE TO THIS CONTRACT *(include scope, size, and cost.)*

- **Lighting retrofits – 37 kW**
- **HVAC unit replacements – 20 units**
- **Programmable thermostats – 16 each**
- **Solar photovoltaics at 5 building locations – 373 kW A-C**
- **M&V**

Project cost: $5,802,791

25. FIRMS FROM SECTION C INVOLVED IN THIS PROJECT

	(1) FIRM NAME	(2) FIRM LOCATION *(City and State)*	(3) ROLE
a.	**N/A**		
b.			
c.			
d.			
e.			
f.			

F. EXAMPLE PROJECTS WHICH BEST ILLUSTRATE PROPOSED TEAM'S QUALIFICATIONS FOR THIS CONTRACT *(Present as many projects as requested by the agency, or 10 projects, if not specified. Complete one Section F for each project.)*		20. EXAMPLE PROJECT KEY NUMBER **10**
21. TITLE AND LOCATION (City and State) **Merced Community College**	22. YEAR COMPLETED PROFESSIONAL SERVICES **2011**	CONSTRUCTION *(if applicable)* **2012**

23. PROJECT OWNER'S INFORMATION

a. PROJECT OWNER	b. POINT OF CONTACT NAME	c. POINT OF CONTACT TELEPHONE NUMBER
Merced Community College District	**Rick Souhrada** **Director of Facilities**	**(209) 384-6135**

24. BRIEF DESCRIPTION OF PROJECT AND RELEVANCE TO THIS CONTRACT *(include scope, size, and cost.)*

- **Retrofit interior and exterior lighting**
- **Installed a trash compaction system**
- **Control System upgrade to optimize swimming pool operations**
- **Installed new roof top HVAC units with DX cooling**
- **Retrofit and improve economizer damper actuators to allow "free cooling" mode, replace pneumatic actuators and compressor with electric actuators, replace pneumatic gym hot water valves with more reliable electric valves.**
- **Central plant controls optimization by re-commissioning chiller and heat exchanger controls and replacing pneumatic control systems with electronic controls and improved control strategies.**
- **M&V**

Project cost: $3,100,000

25. FIRMS FROM SECTION C INVOLVED IN THIS PROJECT

	(1) FIRM NAME	(2) FIRM LOCATION *(City and State)*	(3) ROLE
a.	**N/A**		
b.			
c.			
d.			
e.			
f.			

G. KEY PERSONNEL PARTICIPATION IN EXAMPLE PROJECTS

26. NAMES OF KEY PERSONNEL (From Section E, Block 12)	27. ROLE IN THIS CONTRACT (From Section E, Block 13)	28. EXAMPLE PROJECTS LISTED IN SECTION F (Fill in "Example Projects Key" section below before completing table. Place "x" under project key number for participation in same or similar role)									
		1	2	3	4	5	6	7	8	9	10
Michael Murphy	**Service Account Executive**	X	X	X	X						
Chris Whelihan	**Project Manager**		X			X					
Fred Miller	**Install Project Manager**										
Mary Wyand	**Solutions Development Engineer**							X	X	X	X
Kevin Cross	**Solutions Development Engineer**					X	X			X	
Justin Rundle	**Solutions Development Engineer**					X					X
Shoko Imamura	**Solutions Development Engineer**			X	X	X					
Amy Cho	**Energy Auditor**										
Terry Johnson	**Engineering Estimator**	X	X	X	X						
Bob Newkirk	**Contracts Negotiation**										
Aamer Athar	**Measurement & Verification**		X	X	X	X	X	X	X		X

29. EXAMPLE PROJECTS KEY

NO.	TITLE OF EXAMPLE PROJECT (FROM SECTION F)	NO.	TITLE OF EXAMPLE PROJECT (FROM SECTION F)
1	**City of Walla Walla Ph. I**	**6**	**Lamar Community College**
2	**City of Walla Walla Ph. II**	**7**	**City of Antioch**
3	**Snohomish School District Ph I**	**8**	**Alameda County**
4	**Snohomish School District Ph II**	**9**	**City of Perris**
5	**City of Phoenix**	**10**	**Merced Community College**

Honeywell International, Inc., a Corporation, is a global market leader in the Building Controls, Aerospace, Industrial Automation, and Chemicals and Automobile Components Industries. Founded in 1885, we have been known by our current name, Honeywell International, Inc., since 2000. Operating worldwide from 454 locations in over 95 countries, more than 121 of these locations in North America, we are a Fortune 100 company with total sales exceeding $37 billion dollars annually.

Nearly 50% of our product portfolio is linked to energy efficiency. We estimate the global economy could operate on 10-25% less energy just by using today's existing Honeywell technologies.

A general timeline of Honeywell can be illustrated as follows.

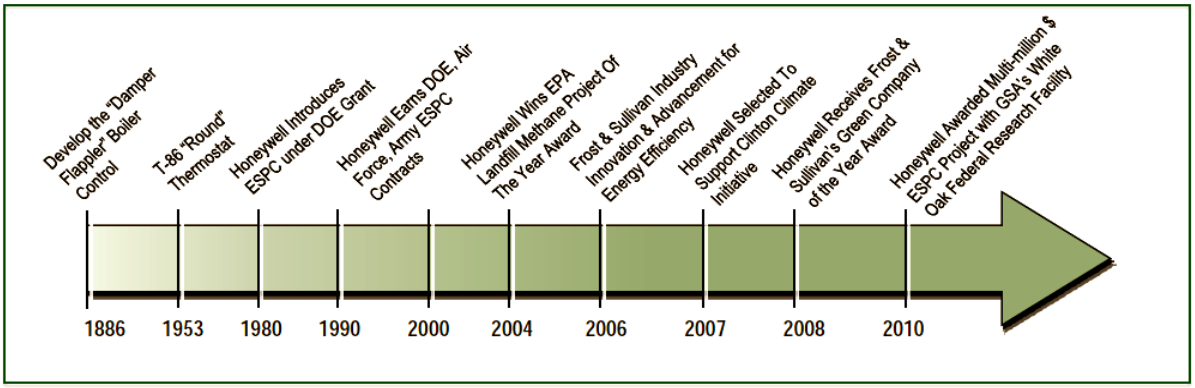

Honeywell International, Inc. is an ESCO, and as such provides a full array of Energy Services Performance Contracting (ESPC) services including project development and management, construction management, measurement and verification of savings, and ongoing service and support.

Honeywell has been providing these services since 1979, with the award of our very first Energy Services Contract. We pioneered and revolutionized the performance contracting business, first coining the concept of "guaranteed savings" under a U.S. Department of Energy grant in 1984.

Honeywell is accredited as an ESCO with National Association of Energy Service Companies (NAESCO). In order to gain accreditation, a company must demonstrate the technical and managerial competence to design and implement projects involving multiple technologies, and submit annual re-accreditation data.

We have also been designated as an ESCO and a Super ESCO by the U.S. Departments of Energy and Defense (DOE and DOD), holding multiple Indefinite Delivery, Indefinite Quantity (IDIQ) contracts with the DOE, U.S. Air Force, U.S. Army, and MEDCOM organizations.

Honeywell is an active member of the Energy Services Coalition (ESC), working closely with State Energy Offices around the country to support the adoption of standards and best practices for performance contracting. Activities through this organization also include outreach and education to interested market sectors and end-user groups, driving utility company demand-side management programs and review of new technologies.

H. ADDITIONAL INFORMATION

30. PROVIDE ANY ADDITIONAL INFORMATION REQUESTED BY THE AGENCY. ATTACH ADDITIONAL SHEETS AS NEEDED.

Honeywell was, and continues to be, one of the original four ESCOs invited to partner with the Clinton Climate Initiative to help the world's largest cities reduce energy consumption and greenhouse gas emissions. President Clinton launched the Clinton Foundation's Climate Initiative in August 2006 with the mission of applying a business-oriented approach to the fight against climate change in practical, measurable, and significant ways. CCI is currently working with the C40 Large Cities Climate Leadership Group to accelerate efforts to reduce greenhouse gas emissions.

In the last fifteen years alone, we have successfully implemented over 5,000 projects at the federal, state, and local levels including government facilities, medical facilities, schools, college campuses, general office buildings, airfields, and industrial facilities, representing a combined total value of approximately $4.6 billion. We currently maintain an estimated $138.2 million in guarantees with Federal, State, Municipal and Commercial customers across North America.

Number and Value of Contracts:

Year	Number of Projects	Total Dollar Value Projects Only
2012	84	$377.1M
2011	106	$297.0M
2010	128	$589.2M
2009	109	$431.6M
2008	150	$345.0M
2007	121	$302.0M
2006	116	$294.5M
2005	132	$196.1M
2004	105	$241.5M
2003	131	$144.8M
2002	69	$74M
2001	58	$161M
2000	68	$156M
1999	95	$130M
1998	168	$168M
1997	191	$269M

I. AUTHORIZED REPRESENTATIVE

The foregoing is a statement of facts.

31. SIGNATURE Suzette Brown For

32. DATE **2/22/2013**

33. NAME AND TITLE

Michael Murphy, Account Executive, Honeywell International, Inc.