ENERGY SAVINGS PERFORMANCE CONTRACTING (ESPC) SERVICES

Project No. 2013-133

MacDonald-Miller
FACILITY SOLUTIONS

Statements of Qualifications

February 22, 2013

Prepared For:
State of Washington
Department of Enterprise Services
Division of Engineering & Architectural Services
Energy Program
1500 Jefferson, PO Box 41476
Olympia, WA 98504-1476
ATTN: Kathi Fyfe

Prepared By:
MacDonald-Miller Facility Solutions, Inc.
7717 Detroit Avenue SW
Seattle, WA 98106

TABLE OF CONTENTS

EXPERIENCE 3
1.0 Energy Auditing & Identifying Energy Efficiency Projects 3
2.0 Range of Energy and Utility Management Services 5
3.0 Measurement and Verficiation Processes 6
4.0 Project Design, Costing & Management 6
5.0 Utility Incentives 11
6.0 Key Staff Qualifications 11
7.0 Experience with Energy Star Portfolio Manager 13
8.0 Experienced Problems & Project Remedies 13
9.0 Makeup of Typical Project Team 14

MANAGEMENT APPROACH 15
10.0 Organizational Structure & Management Approach 15
11.0 Policies & Procedures for Managing and Delivering Committed Work 19
12.0 Marketing Approach for DES Energy Program 19
13.0 Minimum Size Project Viability 20
14.0 Approach to Effective Communication with the DES Energy Program 20
15.0 Approach to Project Development from Marketing to Delivering 20
16.0 Contracting Methods and Cost Competitive Pricing 20
17.0 Procedures for Timely Closeout 21
18.0 Procedures for Timely Submittals 22
19.0 Approach to Risk Mitigation 22
20.0 Approach to sharing EPACT Tax Credits 23
21.0 Experience and Approach to Meeting 23
22.0 Minority and Women Owned Business (MWBE) 23
23.0 Policies and Procedures for Recycling Materials 23
24.0 Hazardous Material Handling 24

COMPUTATION OF ENERGY BASELINE AND POST-INSTALLATION ENERGY USE 26
25.0 Methodologies for Energy Analysis 26
26.0 Scenarios Where Modified Baseline May Be Proposed 28
27.0 Utilization of M&V Processes 28

SAVINGS AND EQUIPMENT PERFORMANCE GUARANTEES 33
28.0 Project Cost Guarantee 33
29.0 Energy Savings Guarantee Policy 33
30.0 Equipment Performance Guarantee 33
31.0 Warranty Enforcement 34
32.0 Financing Ability 34

APPENDICES
A1.0 Project Profiles ..... Appendix 1
A2.0 Financial Support Letters ..... Appendix 2
A3.0 Energy Audit Proposal Example ..... Appendix 3
A4.0 Team Resumes ..... Appendix 4
A5.0 Form 330 ..... Appendix 5

© Copyright 2013, MacDonald-Miller Facility Solutions

EXPERIENCE

1.0 Energy Auditing & Identifying Energy Efficiency Projects

The ESCO's experience in auditing and identifying energy projects. Provide a list of all energy performance contracting projects completed in the past two years, including contract value, client contact and client phone number.

Overview

MacDonald-Miller Facility Solutions is an energy services and building systems contractor headquartered in Seattle, Washington. We have helped change the local landscape with thousands of highly successful projects. Our team of over 700 industry professionals is responsible for building system service and energy management programs, mechanical engineering, design-build construction, and metal and piping fabrication. MacDonald-Miller Facility Solutions is a dedicated group of professionals providing the right solutions through innovative design, expert installation and high-performance services.

Founded in 1965, MacDonald-Miller Facility Solutions is a licensed Washington State contractor, WA State Contract No. MACDOFS980RU, and has State of Washington licensed engineers, boiler technicians, welders and electricians. MacDonald-Miller has maintained one of the industry's best workers compensation experience modification factors which are currently at 0.4747 thanks to the conscientious efforts of our crews, supervisors and safety team.

Energy Auditing & Identifying Energy Efficiency Projects

Energy efficiency improvements are an integral part of our business. Whether performing preliminary and investment grade audits, system retrofits, writing sequences of operations, programming control systems, air/hydronic balancing, troubleshooting, preventative maintenance, systems commissioning or performance management & verification, MacDonald-Miller is committed to making existing building systems. Additionally, MacDonald-Miller continues to invest in technology and people to be deliver cost effective energy savings results. With a building performance target in mind, MacDonald-Miller uses a methodical and transparant approach to achieve the goal of operational excellence.

Our dedicated staff of energy professionals provides performance-based solutions that, on average, are generating significant returns on investments for the building owners. Refer to Exhibit A for representative project profiles.

Our energy services programs provide a full range of energy consulting, training and performance contracting services. MacDonald-Miller has provided energy efficient and sustainable designs for over four decades. The in-house engineering and energy analysis staff have a proven track record of providing innovative solutions that make sound business choices. In addition, the experience with a wide range of building system types inclusive of large industrial central energy plants has given MacDonald-Miller a unique ability to successfully address the operational efficiency for most any type of existing building challenge.

One aspect of our comprehensive energy services model is the ability to guarantee the energy savings through an at-risk performance management business arrangement. With this type of agreement in place, low cost operational improvements can be implemented, validated and reported on a monthly basis. Equally important, this process provides a method for sustaining the performance of the improvements through easy-to-understand monthly reporting and regular training through direct interaction with the building's operating staff.

Project Experience

The following table summarizes MacDonald-Miller's energy-related project experience. Appendix 1 and 5 include project profiles for several of the listed projects.

MacDonald-Miller Facility Solutions Energy Auditing & Utility Conservation Experience					
Project	**Estimated Contract Value**	**Year**	**Primary Scope & Proposed Scopes**	**Contact**	**Contact Number**
Logan Building	$4,100,000	2013	Pending contract execution. Equipment, HVAC Control & Lighting Upgrades. The EE improvements will approach a 50% reduction in the baseline energy consumption.	Brett Phillips	206-373-7128

© Copyright 2013, MacDonald-Miller Facility Solutions

MacDonald-Miller Facility Solutions Energy Auditing & Utility Conservation Experience					
Project	**Estimated Contract Value**	**Year**	**Primary Scope & Proposed Scopes**	**Contact**	**Contact Number**
US Bank Centre	$560,000	2013	Seattle City Light Retro Commissioning Incentive Pilot Program (RCxIPP)	Bill Babbitt	206-623-4739
Highline Community College	$3,800,000	2012-2013	Equipment, HVAC, Boiler, Control & Lighting Upgrades	Barry Holldorf	206-870-3793
Plaza 600	$848,000	2013	Equipment and Control Upgrades	Randy Bartl	206-381-3344
Lake Union Building	$310,000	2012	Equipment and Control Upgrades	Brett Phillips	206-373-7128
Renaissance Hotel	$768,683	2012	Equipment and Control Upgrades	Kelly Luebstorf	206-694-4911
Seattle Central Community College	$3,050,000	2012	Equipment and Control Upgrades	Rudy Vaca	206-396-3241
YMCA Greater Seattle – Auburn, Bellevue, Downtown, East Madison, Northshore & West Seattle Locations	$2,400,000	2012	Equipment, Control & Lighting Upgrades	Glenn Tsugawa	206-799-9073
Compass Health – Bailey Center	$538,219	2012	Equipment, Boiler Plant Replacement, & Lighting Upgrades	Jean Constanti-Oehler	425-349-8399
1201 3rd Ave	$560,000	2012	Controls and Programming Upgrades	Jeff Kasowski	206-224-1201
City of Federal Way – City Hall	$652,194	2012	Equipment and Control Upgrades	Steve Ikerd	253-835-6911
City of Auburn – Community Center	$68,500	2012	Equipment, Control & Lighting Upgrades	Deke Jones	253-835-6912
City of Bellevue – City Hall	$441,277	2011-present	Equipment, Control & Lighting Upgrades	Emma Johnson	425-452-5246
Pacific NW Diabetes Center	$78,005	2011	Control & Steam System Upgrades	Nick Kim	206-568-1496
Washington Athletic Club	$828,193	2011-present	Equipment and Control Upgrades. Performance Management Services.	Dennis Williams	206-464-4633
Northwest Center	$65,530	2011	Control Upgrades	Steve Crutcher	206-378-6364
Century Square	$75,000	2010	LEED Certification Building Audit	Robert LaVergne	206-623-7385
Northgate Plaza	$75,000	2010	LEED Certification Building Audit	Robert LaVergne	206-623-7385
Puget Sound Blood Center	$138,912	2010	Control & Steam System Upgrades	Jim Douma	206-292-2549
Bellevue Westin	$63,080	2010	Building Energy Optimization Program	Tim Altier	425-638-1055
IBM Building	$250,000	2010	Equipment and Control Upgrades	Brett Phillips	206-373-7128
Benaroya I-90 Building	$510,663	2010	Equipment and Controls Upgrades	Andrew Hoffner	206-774-1014
Riverview Building 1	$95,734	2010	Controls & Programming Upgrades	Steve Guagliardo	425-277-5683
Riverview Building 2	$116,934	2010	Controls & Programming Upgrades	Steve Guagliardo	425-277-5683
King County Library System (32 Branches)	$2,200,000	2009-present	Equipment and Control Upgrades	Jim Worsdale	425-369-3308
Key Center Bellevue	$325,000	2008-present	HVAC Retro-Commissioning, Controls & Programming Upgrades. Performance management & Energy Star Certification.	Darrell Bell	425-646-6251
Wells Fargo Center	$752,397	2008-present	Controls/Programming Upgrades and Energy Star Certification.	Michael Webb	206-583-2761
Puget Sound Naval Shipyard (Multiple Projects)	$2,132,140	2008-2011	Equipment, HVAC, Boiler & Controls Upgrades	Randy Rogers	360-476-4744

© Copyright 2013, MacDonald-Miller Facility Solutions

2.0 Range of Energy and Utility Management Services

Provide a matrix of the range of energy and utility management services provided by the ESCO, including the ESCO's capability to provide the following services: energy auditing, financing, design, general contracting, construction management/administration, testing and balancing, commissioning, warranty services, measurement and verification of saving, energy savings guarantees and facilitating utility participation to maximize utility participation to maximize utility rebates and incentives.

MacDonald-Miller Facility Solutions is an outcome-based contractor in the Pacific Northwest. Our programs have been tailored to meet the diverse needs of most types of buildings as well as needs of the building owner, operator and tenant. MacDonald-Miller provides energy auditing, financing, mechanical engineering, design-build construction, custom metal fabrication, building system service and maintenance, and energy management programs.

Our contracting model is extremely pliable to the specific procurement needs of the customer. As indicated in the below table, MacDonald-Miller has the capacity and capabilities to self-perform most every element of an energy efficiency retrofit. However, we can also act as a general contractor/construction manager, bidding and subcontracting work as required.

Range of Energy & Utility Management Services	Self-Performed
Energy Auditing	√
Third Party Financing	√
Building Information Modeling	√
System Design/Engineering	√
Construction Program Management	√
Commissioning	√
Planned Maintenance	√
Enhanced O&M	√
Performance Optimization	√
Measurement & Verification of Savings	√
Savings/Performance Guarantees	√
Utility Incentive Management	√
Plumbing and Water Conservation	√
Air & Hydronic Testing and Balancing	√
Renewable Energy Analysis	√
Warranty Services	√
Emergency Response/Repairs	√
Specialty Metals	√
Consulting Engineering	√
In-Building Airborne Threat Management	√
Electrical Auditing & Service	√
Lighting System Auditing	√
Building Automation/Energy Management System	√
Special Project Engineering and Construction	√
Remote Monitoring	√
Troubleshooting & Repair	√
Lighting System Upgrades & Service	√

© Copyright 2013, MacDonald-Miller Facility Solutions

3.0 Measurement and Verficiation Processes

The ESCO's experience with measurement and verification processes, should describe its familiarity with M&V protocols and when each is most appropriately applied.

MacDonald-Miller develops a detailed measurement and verification program as an integral task of the project development process. The program includes an on-going performance management and reporting procedure that adheres to the International Performance Measurement and Verification Protocol (IPMVP).

IPMVP is an internationally recognized standard that provides four options for the measurement and verification of energy savings. The options include:

- Option A: Partially Measured Retrofit Isolation
- Option B: Retrofit Isolation
- Option C: Whole Facility
- Option D: Calibrated Simulation

Each of these options provides a varying degree of accuracy, complexity and cost. Since our primary focus is to deliver the expected energy savings at the building meter year-over-year, our default and most commonly used method is IPMVP, Option C. Refer to Section 27.0, Utilization of M&V Processes, for additional detail on our preferred utility savings verification and reporting process.

Option A has been used for specific performance validation for a single piece of equipment such as a chiller or boiler efficiency. Option B is used if we are isolating the central heating or cooling plant from the rest of the Facility. Lastly, Option D is commonly used for utility company compliance or where multiple buildings are being powered by a metered substation and individual building metering is not sufficient. Regardless of the chosen Option, it is highly important that all Stakeholders are comfortable with the chosen M&V process.

4.0 Project Design, Costing & Management

The ESCO's experience with designing, costing and managing the construction of heating plants (including steam), chilled water plants, heating and air conditioning systems, heat recovery, energy management and control systems, lighting and lighting control systems, water efficiency, and other utility system improvements including renewable.

Overview

MacDonald-Miller Facility Solutions has been delivering fully designed and constructed projects for over 47 years. These projects have been delivered using many costing methods of which guaranteed maximum pricing (GMAX) is a predominate method of choice. In the past five years, MacDonald-Miller has successfully delivered an average of $80 million of projects annually using a guaranteed maximum price, design-build-manage delivery model.

At the core of our success are our experienced engineering, project management and field professionals. Our people have a wide range of mechanical systems design experience as well as a long history of successful costing and management of complex projects covering an extensive array of size, technical complexity and challenging schedule requirements.

Our in-house staff, one of the largest engineering groups in the Puget Sound, will do all engineering and related project management tasks for auditing, pricing, procurement and delivery. Currently, our Washington team consists of:

9	Registered Professional Engineers
21	USGBC LEED® Accredited Professionals
13	System Designers and Energy Engineers
8	Certified Energy Managers
3	Certified Measurement and Verification Professionals

© Copyright 2013, MacDonald-Miller Facility Solutions

15	CAD / Detailing Professionals
7	Estimators
18	Project Management Professionals
42	Account/Project Development Executives

Design Experience

MacDonald-Miller's design experience encompasses the full range of comprehensive energy modeling, integrated delivery using three-dimensional modeling software, life cycle systems engineering, renewable energy alternatives and mechanical-electrical-plumbing (MEP) coordination leadership for both new construction and existing non-residential building systems. Our design portfolio includes bio-tech and lab projects, hospitals, banks, hotels, apartments, theaters and campus office environments.

MacDonald-Miller has been responsible for the energy analysis and design for many large central energy plants. Many of which serve critical environments such as the plants for Swedish Medical Center, Enumclaw Hospital Expansion, Virginia Mason, Microsoft Buildings 84 & 85, AT&T Bothell Data Center, Tacoma General Hospital, Amgen and SeaTac International Airport. We have also worked on heat recovery-based central plants as representative of the systems serving 5th Ave Plaza and Century Square properties.

As an example, our design work at the Seattle 5th Ave Plaza building involved the redesign of the existing piping system to allow for a change in the heat recovery operation. The redesign saved the owner 30% in initial machine costs and doubled the chilled water capacity using the equivalent power resources. The owner enjoyed both a reduction in operating costs as well as a substantial rebate for the new heat recovery system.
For MacDonald-Miller, ***integrated delivery*** has always meant that the designers and craftsmen are collaborating throughout a project's development and construction. As our model has been refined over the years we are integrating the line between design and construction; providing more efficient and seamless project deliveries. It is our standard that the engineer's design is reviewed at specific milestones for constructability by our foreman. This review process results in designs that once issued for construction reflect what we will truly install.

Some of the key elements of our integrated delivery process are:

- Engineers receive feed-back from our field personnel on construction techniques continuously to reduce cost on our projects.
- Software design and modeling tools effectively allow for refinements as we move into fabrication and installation providing a less costly and faster delivery process.
- Project foremen are responsible to work with the engineers and detailers to produce our final shop drawing package to eliminate waste and changes.
- Design software is compatible with estimating software to allow for accurate and timely pricing information.
- Team coordination process is documented on the drawings and back checked along the way reducing cost overruns.

MacDonald Miller has been using three-dimensional ***building information modeling*** (BIM) for over a decade. Several of our talented in-house detailers/programmers are responsible for the development of a software extension for AutoCAD. This enhanced modeling feature allows us to customize our 3D CAD platform like no other and develop an integrated process. Our philosophy and internal MEP Coordination processes have developed over time and provide invaluable insight to the constructability and cost for the most complex projects. We choose to model our mechanical components as well as major building components to insure an efficient, conflict-free installation for the field.

In our experience, building information modeling offers significant advantages to the project team. A few of the most important advantages are:

- Information about the entire building and a complete set of design documents stored in an integrated database.
- All information is parametric and therefore completely interconnected.

© Copyright 2013, MacDonald-Miller Facility Solutions

- Any change to the relationships among objects is instantly reflected throughout the rest of the project – in all representations of the project.
- BIM increases speed of delivery, reduces errors, increases productivity, and provides a high quality work product.

McDonald-Miller sees coordination between trades as one of the most important steps to reducing requests for information and change orders. We utilize a time-tested Virtual Design and Construction (VDC) process of integrating information from each trade to maintain the design intent and meet the requirements of the project.

MacDonald-Miller is currently using the following programs for our building information modeling needs.

- Revit Systems in conjunction with Revit Building and Revit Structure software.
- Autodesk Building Systems as well as AutoCAD v.2007.
- Navis Works JetStream for coordination and collision detection.
- QuickPen and MAPS for accurate costing information.
- DOE 2 and Trane TRACE 700 for building energy modeling.
- Microsoft Project Server for scheduling and detailed project tasking.

Costing Experience

The MacDonald-Miller estimating team uses QuickPen and an integrated master costing database to accurately cost projects. The complete technical software package integrates our engineering services, CAD drawings and shop fabrication allowing accurate and detail estimates. Firm pricing of all materials will be secured by our purchasing professionals to insure accurate and up-to-date pricing.

Project Management Experience

MacDonald-Miller provides a comprehensive and detailed project management plan for every project. This plan is the collaboration of all key stakeholders. It is reviewed and revised on a regular basis as agreed-to by the collective team and the complexity of the project.

Fundamentally, we believe communication and coordination driven project management are essential to every successful project. We know it is important to utilize a team approach so that all parties are working towards a common goal.

It is our submission that a successful project is based on:

- Performing our work in a highly coordinated, efficient manner that reduces labor costs.
- Making the entire team more effective while delivering a high quality project.
- Closeout and Acceptance Process

Our core business model is to self-perform a significant amount of the overall energy management work for the specific purpose of controlling the variables that can affect project labor, effectiveness and quality. We also may have subcontractors performing portions of our work and because of this we will implement specific processes to create an integrated execution plan for our own forces as well as our subcontractors.

MacDonald-Miller places a high level of importance on the pre-planning, scheduling and quality control processes. To integrate these concepts into the project we use the ***LEAN*** process for all complex projects including existing building energy retrofits.

This intense up-front planning and quality control process provides our clients with a higher quality installation, far fewer and/or last minute requests for information, on-time or ahead of schedule installations, less field trade conflicts, shortened schedule durations, faster submittal reviews with greater accuracy, less rework, minimized material lay down and storage requirements, and increased communication flow with our clients. The MacDonald-Miller LEAN process and approach are as follows:

© Copyright 2013, MacDonald-Miller Facility Solutions

1st Phase – Initial Review:

Our production and quality control teams define the specific scope of work and confirm the following critical project information is included.

- Contract Documents – The production and quality control team compile all the information required to install the work.
- Project Schedule – The scope of work is reviewed with the Client, confirming sequencing and durations meet with construction schedule requirements.
- Risk Assessment – Scope is reviewed for possible issues that could pose potential risk to completing the task (i.e. long lead items, weather, trade sequencing issues).
- Design Errors/Omissions – A detailed review of the system and verification that all requests for information have been issued for any missing information.
- Material Assessment – Specified materials have been cross checked with each system to confirm a best fit solution.
- Equipment Assessment – Specified equipment is reviewed for inherent impacts (i.e. long lead, size or weight Issues, maintenance access) and each piece of equipment is cross checked with the specifications to confirm a best fit solution.
- Tools – The production and quality control team confirm availability of special tools or required installer training is in place.
- Safety – Draft templates are completed for the proposed scope of work.

2nd Phase – Preparatory Review Meeting:

Our production and quality control teams prepare the scope specific information required and select the installation team best suited for the task.

- Submittal Data - Submittal data is compiled and forwarded for review and approval using the MacDonald-Miller quality control checklist process. Any proposed variance to specified materials or equipment is documented in the quality control checklist.
- Labor Team – A foreman is selected and crew mix defined for the specific scope of work.
- Risk Assessment – Our production and quality control team perform a 2nd risk assessment with the Foreman, reviewing any potential issues that could cause a delay, quality issues, or safety hazards that could possible impact the scope of work.
- RFI Response – The team reviews responses to requests for information and incorporates this information into the final scope of work.
- MEP Coordination – Our team reviews MEP coordination process, confirming all updates have been included in the specific scope of work.

3rd Phase – Final Sign-off and Site Review Meeting:

Based on our LEAN approach to the construction process, this phase of planning occurs just prior to the actual field installation of any work.

- Submittal Data – Submittal review comments are confirmed as accepted and any revisions are incorporated.
- RFI Responses – Final confirmation that all requests for information responses have been received.
- Shop Drawings – Field shop drawings are reviewed and signed-off by the team members prior to installation.
- Materials – A quality control review of materials is completed during this phase of final planning confirming material type, completeness of the order, and the packaging and cleanliness of the order.
- Equipment – A quality control review of equipment is completed at this phase of final planning documenting product data, labeling and access requirements.
- Tools – The quality control team reviews the tools supplied to our field staff, confirming they are on site and in good working order.
- Site Conditions – A final review of the site conditions is performed just prior to mobilizing, confirming the area of work is ready and any field conflicts are resolved.

In addition to the lean process, our estimating and budgeting control are key components to successful management of the project. We develop a solid plan with all costs identified and through continual monitoring and quick response to identified variances we can guarantee the project will meet budgetary requirements. This complete approach has allowed MacDonald-Miller to be very successful in providing our clients great value for their investment.

© Copyright 2013, MacDonald-Miller Facility Solutions

Energy Management & Control System Experience

MacDonald-Miller currently employs a staff of twenty-eight system control engineers and technicians. These seasoned industry professionals are capable of providing hardware and software engineering, product application, estimating, diagnostics, field installation, testing and service for most any brand of building automation system.

We utilize the building owner's brand of choice, if applicable, to provide the following services:

- Review, modify, develop and implement hardware and software changes.
- Perform system upgrades and migration to web-based, open-sourced building automation platforms while preserving as much of the existing infrastructure as feasibly possible.
- Perform and/or assist with writing the programming logic to add/modify the sequences of operation for each system and the associated components.
- Perform detailed functional performance testing and system checkout.
- Rebalance and adjust existing mechanical systems in accordance with NEBB methods.
- Complete programming, control hardware and point-to-point engineering diagrams as well as as-built documentation.

Lighting & Lighting Management Control System Experience

MacDonald-Miller has been in the lighting and lighting management control system business for over twenty years. MacDonald-Miller maintains a core group of twelve lighting professionals to support the auditing, pricing, execution and service of our lighting retrofit projects. When appropriate, we will supplement our team with certified lighting professionals to develop the most cost effective and energy efficient design. Depending on the scope and needs of the project, this work will either be performed in-house by our licensed electricians or subcontracted.

Water & Waste Management Experience

Lowering the water and sewer costs of a facility are an integral element our energy services program. Like gas and electricity, water and sewer costs are a significant component of the overall utility costs of a facility. As such, our energy auditing process includes a complete assessment of the plumbing systems to identify opportunities worthy of upgrading to low flow fixtures. Additionally and when applicable, our services assess the water treatment strategies being used as well as the opportunities to sub-meter systems such as vehicle washing stations, irrigation and cooling towers to obtain sewer credits and better control strategies for heavy water users.

Building Envelope Systems

MacDonald-Miller maintains professional relationships with building envelope consultants in order to perform a complete assessment of the building envelope. These assessments often include weatherization upgrades such as windows, insulation and glazing. These measures tend to have a much higher first cost investment threshold, even when tax credits and incentives are deducted, and a longer financial payback period. If we determine that elements of the building envelope audit are beyond our expertise, we will incorporate the services of industry professionals.

Renewable Energy & Sustainability Experience

MacDonald-Miller is well versed at integrating sustainable design practices and renewable energy technologies into our business processes and projects. A representative example of this capability is Shoreline Civic Center.

Cooling is provided by two rooftop air conditioners. Local air distribution is accomplished with parallel VAV terminal units with electric heat. A separate server room is cooled with two packaged rooftop air conditioners. Building general exhaust, elevator cooling, and telecom cooling are also provided. A full direct digital control system is included for control and monitoring of critical components.
The project includes a number of energy efficient features. High insulation levels (R-18 wall, R-38 roof) reduce the building heating and cooling energy use. Demand controlled ventilation (DCV) is provided for high occupancy zones. The data center cooling system includes a heat recovery feature where warm air is rerouted to zones requiring heat. A solar thermal hot water system provides domestic hot water for public restrooms. The project has obtained LEED Gold certification, including 5 points from EA Credit 1.

© Copyright 2013, MacDonald-Miller Facility Solutions

We have been at the forefront in the State of Washington as a participant in many of the most aggressive USGBC LEED® projects for new construction, core and shell, commercial interiors and existing building programs. A list of representative projects can be provided upon request.

5.0 Utility Incentives

The ESCO's experience securing utility incentives for its customers.

MacDonald-Miller manages the details of securing every available incentive at a Utility, State and Federal level. We have a dedicated individual, Paul Young, at MacDonald-Miller to secure all available incentives. Paul is dedicated to managing this process for MacDonald-Miller.

In essence, we believe our relationship with the utility company starts before any project is identified.
This account management approach eliminates the frustrations and disappointments that are often associated with accessing the utility incentives. Our philosophy is to manage our utility relationships no differently than any other business relationship.

As a company, we make every effort to support the programs and interest of the local utilities. We were actively involved in assisting the Bonneville Power's Rooftop Optimization pilot program that was conducted in 2010 on over 150 units throughout the region. We are actively engaged with Puget Sound Energy's Comprehensive Building Tune-Up (CBTU), formerly known as Building Energy Optimization Program (BEOP), and successfully executed one of the first projects under this program. Additionally, we are an active participant in Seattle City Light's (SCL) Retro-Commissioning pilot and have been working with SCL on a pay-for-performance incentive program.

The incentives that we document and coordinate on behalf of the Owner will be an integral component of our guaranteed pricing.

Our approach to securing funding from local utilities typically proceeds in the following manner:

- Engage early and often.
- Contact applicable utility to confirm representative and to conduct a preliminary scoping discussion.
- Utility representative provides direction on any specific filed data, process and/or analysis.
- Scope of work package with analysis is reviewed with the utility.
- Utility issues a statement of intent outlining the estimated funding and required deliverables for funds to be released for payment.
- Once all deliverables are satisfied, the utility processes payment.

The total electric and gas incentives we have secured for the Puget Sound Region in 2012 exceed $850,000.

6.0 Key Staff Qualifications

A description of the experience key staff have, who are responsible for administration of any potential work awarded thru this project. This is to include any-sub-consultants routinely used for execution of performance contracting work. This is not the resumes or curriculum vitas (CVs) of personnel. Resumes or CVs may be attached as an appendix. Please indicate if the experience was obtained at other than this ESCO. Please identify responsible licensed P.E.

Our reputation in the Region is evidence of our employees' working knowledge, skills, and attitude toward the successful completion of projects. The professionals that are assigned to this project are supported by hundreds of experienced individuals with a 'can-do' attitude. Changes and additions will be made, as warranted, throughout the development and execution of the Energy Saving Performance Services program.

The following table is a representative list of the individual qualifications assigned to supporting our energy initiatives. This is not a complete listing due to the number of individuals available to support the needs of our energy projects. Refer to Appendix 4 for personal resumes.

© Copyright 2013, MacDonald-Miller Facility Solutions

Name, Title	*Academic & Professional Qualifications*	*Experience*
Perry England, Executive in Charge	Bachelor of Science Mechanical Engineering	27 years
Stephen Wilson, Energy Operations Manager	Bachelor of Science Construction Management MCA Certified Mechanical	24 Years
Brian Wheeler, BP Field Operations Manager	NEBB Qualified Supervisor for Air and Hydronic Environmental Systems ASHRAE Testing, Adjusting & Balancing Development Seminar NEBB Testing, Adjusting & Balancing Professional Development Seminar	25 Years
Jeremy Richmond, Building Performance Specialist	Certified Energy Manager Certified M&V Professional LEED Accredited Professional	15 Years
Dave Gehman, Senior Systems Engineer	Bachelor of Arts Certified Energy Manager (CEM) Certified M&V Professional ABB VFD Certified Technician	24 Years
John Van Hersett, Systems Specialist	Certified Energy Manager Certified M&V Professional	17 Years
Paul Young, Design Engineer	Bachelor of Science Physics Master of Science Mechanical Engineering	3 Years
Ron Landberg, TAB/Commissioning Supervisor	NEBB Certified Commissioning Professional TABB Certified Technician	17 Years
Jim West, Safety Manager	OSHA Instructor - Construction OSHA Instructor - General Industry OSHA VPP Trained Evaluator UW Bachelor of Science Certified Safety Professional	26 Years
Doug Turley, EVP Engineering	Bachelor of Science , UW Professional Engineer (PE), State of CA Professional Engineer (PE), State of WA	35 Years
Greg Nanadjanians, Energy & Design Engineer	Bachelor of Science Mechanical Engineering Professional Engineer (PE), State of California, Professional Engineer (PE), State of Washington	28 Years
Jared Sheeks, Energy & Design Engineer	Bachelor of Science Mechanical Engineering, Professional Engineer (PE), State of California, Professional Engineer (PE), State of Washington, Certified Energy Manager LEED Accredited Professional	9 Years
Gary Wallace, Energy & Design Engineer	Bachelor of Science Mechanical Engineering Professional Engineer (PE), State of Washington	26 Years
Ed Culp, Energy Analyst	Certified Energy Manager NEBB Commissioning Professional	22 Years
Greg Noel, Energy Analyst	Bachelor of Science, Mechanical Engineering	11 years
Lindsey Andrews, Controls Supervisor	Bachelor of Science Mechanical Engineering Nuclear Propulsion Engineer Qualified	11 Years

© Copyright 2013, MacDonald-Miller Facility Solutions

Name, Title	*Academic & Professional Qualifications*	*Experience*
Dave Martinson, Systems Specialist	Associate of Applied Science Degree in HVAC Design MCA Certified Project Manager, Level 2	16 Years
Dave Fillo, Senior Project Manager	Journeymen plumber 1979 Electrical Administrator 2003 to 2005 Low voltage electrical license 1990 to 1995 BAT certification from 1990 to 2008 B2218 Various education on boiler, pumps MCA Engineering for non-engineering MCA Project Manager II graduate	34 Years
Ed Adams, Electrical Supervisor	IBEW/NECA-JATC Apprenticeship Training NECA Estimating Course	23 Years
Jason Schaat, Detailer/Programmer	Bachelor of Science, Electrical Engineering Bachelor of Arts, Industrial Design	16 Years
Marty Loft, Systems Specialist	NEBB President (2000) NEBB Board of Directors (1995-2000) NEBB Sound/Vibration Committee Chairman (1995-1996) Pacific Northwest Environmental Balancing Bureau (PNEBB) Chapter Coordinator (1991-1998) PNEBB President (1987-1990) ASHRAE Associate Member	25 Years

These individuals will be supported by experienced MacDonald-Miller electricians, fabricators and service technicians as required for the successful completion of the established project milestones and obligations

7.0 Experience with Energy Star Portfolio Manager

A description of the ESCO's familiarity with EPA's Energy Star Portfolio Manager and other benchmarking tools.

Energy Star Portfolio Manager is an integral component of every building performance assessment conducted by MacDonald-Miller – no exception. The portfolio manager serves as a nationally recognized benchmark to assess the overall performance of a facility. In 2012, we have either directly completed or assisted in the creation and certification of over 100 sites in portfolio manager within the Puget Sound. Based on this level of annual activity, we assess our familiarity with EPA's Energy Star Portfolio Manager as a *proficient* user.

MacDonald-Miller continually explores benchmarking tools entering the market. The list is exhaustive and ever growing. However, the only other core benchmarking tool in addition to Energy Star Portfolio Manager used in every building assessment is MacDonald-Miller's Utility Analytics. A detailed explanation of this tool is provided in Section 27.0, Utilization of M&V Processes.

8.0 Experienced Problems & Project Remedies

A discussion of problems experienced on project and the remedy for those problems.

Not sure how to effectively respond to this question due to its ambiguity. Fortunately, MacDonald-Miller has not experienced situations on projects that would be classified as "problems". Some of the more common site-based issues which are quickly communicated and resolved are:

- Invoicing detail. The amount detail and how it is organized is typically an iterative process for the first invoice. When this issue arises it is typically resolved shortly after the first invoice and a brief conversation with the Customer.

© Copyright 2013, MacDonald-Miller Facility Solutions

- Unforeseen/identified issues. These items have historically been successfully resolved through discussion with the collective project team management and covered within the allocated contingency. The issues vary in relevance; e.g., proper management of concealed hazardous materials, changes in Facility access protocols, code compliance for totally unrelated out of scope items.
- Out of scope "special" requests. It is not uncommon once construction begins that "while you are here can you help me with…." requests are made by the Facility staff. MacDonald-Miller welcomes this within reason since we believe it is an indicator of trust and a productive working relationship. This is a situation which has to be managed very closely and carefully discussed with the Facility personnel if these special requests start impacting productivity and costs.
- Performance issues with new equipment. When these issues are identified they have been quickly and successfully resolved with the equipment manufacturer at no cost to the Customer.
- IT coordination. Issues associated with IT are resolved by engaging them early in the assessment and construction delivery process. Since so much of a building's operational efficiency is heavily dependent on the control strategies and data connectivity, having a good working relationship with the Facility's IT personnel is imperative.
- Building control graphics and user interface. We address this common issue by submitting a review set of graphics prior to actually starting the programming. This allows for sufficient dialog and revision of the planned graphical interface before the programming is started.
- Reporting compliance. Making sure that every "i" is dotted and "t" is crossed is vitally important. MacDonald-Miller takes great pride in making sure the reporting and compliance documentation is fully understood during the earliest stages of a project's development. This attention to project management detail has historically eliminated any disappointments.

9.0 Makeup of Typical Project Team

What is the makeup of a typical project team with regards to local (WA, ID, OR) vs. outside the region staffing.

Our project teams are 100% Washington. There are no readily known projects or situations where labor has been sourced outside of Washington State.

© Copyright 2013, MacDonald-Miller Facility Solutions

MANAGEMENT APPROACH

10.0 Organizational Structure & Management Approach

The ESCO's organizational structure and management approach to the project. Clearly describe the roles and responsibilities of typical ESCO staff who will be assigned to any project obtained under this selection and of any sub-consultants included on the ESCO's team. For sub-consultants, describe the ESCO's prior experience working with the sub-consultant.

For decades at MacDonald-Miller we have fostered a culture of respect and continuous improvement for both our customers and our employees. Our mission is to satisfy our customers and be the best we can be. MacDonald-Miller delivers high performance with a focus on innovative engineering and operational excellence.

Corporate Organizational Structure

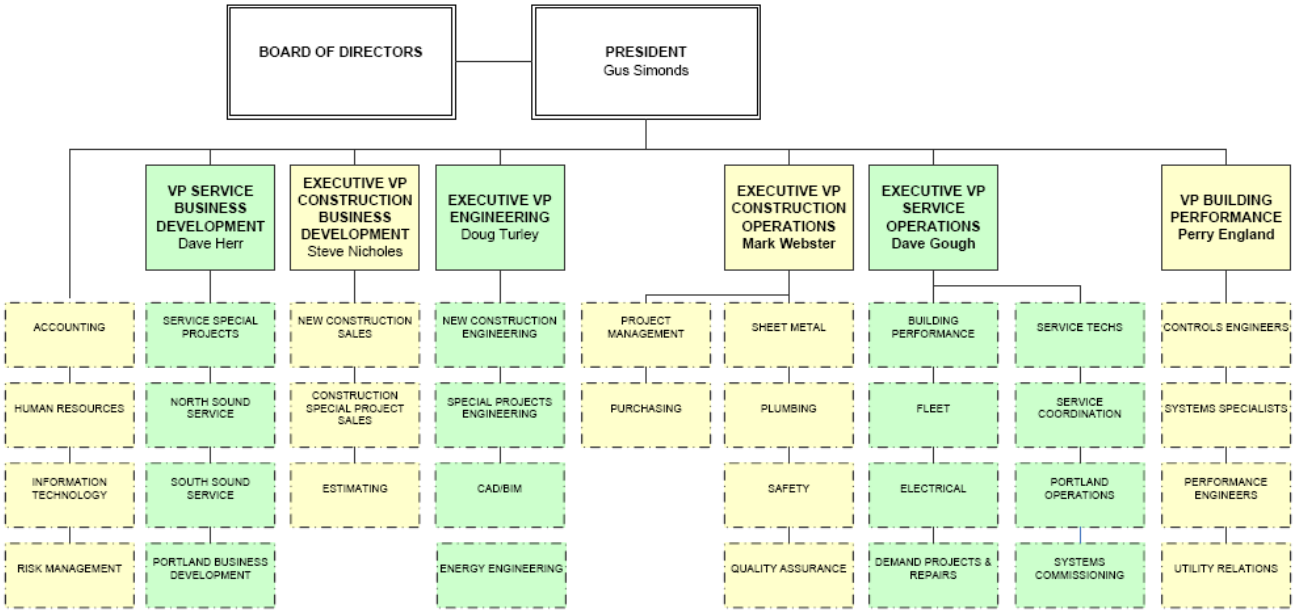

Executive Management

Officers of MacDonald-Miller Facility Solutions include Gus (Derrick) Simonds, Chief Executive Officer, Stephanie Gebhardt, Chief Financial Officer and Vice Presidents that represent the different functions and capabilities of the company; Dave Herr VP of Service and Business Development, Steve Nicholes Executive VP of New Construction and Business Development, Perry England VP of Building Performance, Doug Turley Executive VP of Engineering, Mark Webster Executive VP of Construction Operations and Dave Gough Executive VP of Service Operations.

Management Approach to the Project

MacDonald-Miller's reputation in the Pacific Northwest is that of an organization which provides building environmental systems solutions to public and private customers, and in a fashion that materially and positively contributes to their substantial energy savings and operational effectiveness. An integral component of MacDonald-Miller's success has been continual process improvement.

Representative Project Team Structure

The following team structure is representative of a typical energy project. In this example, Dave Martinson is the key interface for day-to-day management and coordination of the energy program. Dave leads the project team through the development, implementation and acceptance of the approved scope of work. He also ensures the performance validation phase of the project is effectively managed by Jeremy Richmond through the energy savings guarantee/warranty period.

© Copyright 2013, MacDonald-Miller Facility Solutions

In addition to Dave, Dale Mesecher (Account Executive) and Jeff Pattengale (Service Operations Manager) will insure that the Owner's goals are understood. They will be an integral part of the project steering /scoping process and will provide an additional avenue for maintaining effective communication with the Owner, in this instance the City of Federal Way.

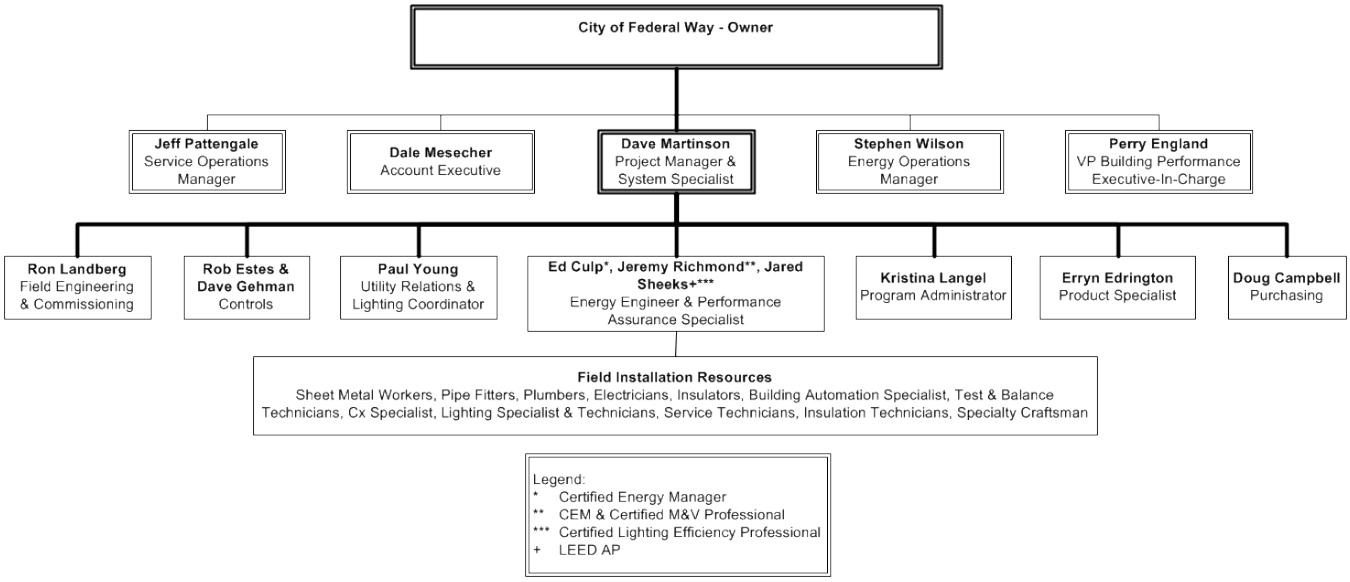

Note: This chart is a proposed/typical organizational structure for a project. The exact team and preferred structure will be modified based on the specific needs of a given project and Owner requirements

Roles and Responsibilities of Project Team Members

The roles and corresponding responsibilities of each project team member are clearly defined at the point of project inception. Depending on project size, location and owner requirements, some roles may be combined while others may need to be defined and added.

Role	Responsibility
Executive-In-Charge	Ultimate accountability for the program's success.
Account Executive	Main point of contact during the pre-construction phase of the project focusing on system selection, budget control, value engineering, and pricing. AE will also assist the design team during the design phases. phase, and will attend weekly design and construction meetings
Project Manager / Systems Specialist	Overall management of project development, financials, staffing, schedule, and project acceptance.
Energy Engineer	Technical lead for the non-lighting portions of the development phase. Responsible for all aspects of UDA, savings, guarantee, rebate and schematic design in the development phase. Heavily involved as a technical resource during the design phase.
Lighting Engineer	Technical lead for lighting portions of the development phase. Responsible for all aspects of UDA, savings, guarantee, rebate and schematic design, as it relates to lighting systems in the development phase. Heavily involved as a technical resource during the design phase.
Energy Engineering Analyst	Complete the energy engineering analysis to quantify categorically and by financial payback the identified facility improvement measures.

© Copyright 2013, MacDonald-Miller Facility Solutions

Role	Responsibility
Utility Relations & Energy Efficiency Coordinator	Manage utility relationships and the administration of energy conservation grants and rebates.
Design Engineer	Mechanical and/or electrical engineer of record. Responsible for all energy calculations and design related details. Oversees the detailing and fabrication process.
Performance Engineer	Measurement and verification professional. Has ultimate accountability for managing the energy savings and reporting results.
Program Administrator	Manages the program and project administrative details. Administrative support for the entire program.
Field Engineer / Systems Technician	Perform all field related activities associated with data acquisition, controls programming, loop tuning, lighting improvements, system start-up, troubleshooting, test and balance, and commissioning.
Project Superintendent	Responsible for on-site supervision and coordination of subcontractor's field activities.
Estimator	Responsible for producing accurate cost estimates based on historical data base and project experience.
CAD/BIM Detailer	Develops accurate fabrication and installation details.
Purchasing Agent	Responsible for obtaining vendor and subcontractor proposals as appropriate.

Sub-Consultants & Prior Working Experience

MacDonald-Miller is a proponent of teaming with industry experts. As such, we have developed long standing and successful business relationships with many of the region's leading professionals. Our solid business relationships with the sub-consultants below are representative of our efforts to partner with people that are considered by the industry to be best-in-class in their specific field.

Sub-Consultants	Fields of Expertise	Contact	Prior Working Experience
LMN Architecture	Architecture, building envelope, sustainability strategies, enhanced energy modeling, day lighting strategies and integrated delivery.	Walt Niehoff Principal in Charge	MacDonald-Miller and LMN have enjoyed a successful working relationship on numerous high-performance projects throughout the Pacific Northwest.
International Seismic Application Technology	Seismic and structural analysis.	Joshua Price Engineer	For over a decade, ISAT has provided seismic analysis and engineering to MacDonald-Miller.
Fair Building Technology	Building envelope forensics and analysis.	Jim Fair Owner	This is a relatively new relationship. FBT has demonstrated a unique expertise in developing highly comprehensive energy strategies for the building envelope.
JA Energy Services	Provides a unique, time proven set of software tools known as RMATS (Resource Management Accounting Tracking System). RMATS allows us to analyze the impact of implementing specific control strategy changes as well as overall system improvements. It is a spreadsheet-based energy analysis toolset.	Jim Sura Owner	JA Energy Services and MacDonald-Miller have been collaborating for the past five years on numerous energy efficiency projects. Our two companies share technical and engineering resources on a regular basis.

© Copyright 2013, MacDonald-Miller Facility Solutions

Sub-Consultants	Fields of Expertise	Contact	Prior Working Experience
Benz Air Engineering	Highly-specialized level of expertise for improving the part load operational efficiency and emissions reduction of medium to large scale boilers.	Robert Benz Owner	Multiple large heating plant projects at Joint Base Lewis-McChord, Boeing Everett Plant, Seattle Steam and Bremerton Naval Shipyards.
Hudson Bay Insulation	Mechanical system insulation.	Justin Dickens Energy Efficiency Auditor	Hudson Bay and MacDonald-Miller have a long standing working relationship on numerous retrofit and new construction projects. Hudson Bay is currently assisting us with the steam and hot water insulation assessments for 24 properties in downtown Seattle.
Kulchin Drilling	Geothermal analysis, costing and drilling.	Steve Kulchin Owner	Kulchin has demonstrated over the past three years to be a leader in innovative drilling technologies for geothermal systems. Our two companies have worked together on several new construction projects. We are currently developing energy retrofit proposals for three projects.
Energy Efficiency Finance Corporation (EEFC)	Alternative financing strategies and structures.	John MacLean and Dan Clarkson Managing Principals	EEFC and MacDonald-Miller are business partners for the pursuit, development and execution of innovative energy efficiency finance structures. In 2009, we were successful at securing $2.5 million in ARRA EERE monies through the State Energy Program.
Northwest Energy Efficiency Alliance	Energy audit & peer review.	John Vanderford, Jim Volkman and Janice Petterson	MacDonald-Miller is an allied partner of NEEA/BetterBricks. This relationship has supported the development of many EE projects.
Gana-A' Yoo Services Corporation	General Contracting Services, Refrigeration and Commercial Kitchen Maintenance	Wayne Eddy Project Executive	The MacDonald-Miller and GSC team is installing energy efficiency upgrades at the Union Gospel Mission buildings as well as pursuing many other public and private projects in Washington State

© Copyright 2013, MacDonald-Miller Facility Solutions

11.0 Policies & Procedures for Managing and Delivering Committed Work

The ESCO's policies and procedures for managing and delivering its committed work products in a timely fashion within contractual obligation, including project development, construction, and post implementation verification.

Below is a representative project development flow chart of the processes used to manage and deliver the work identified.

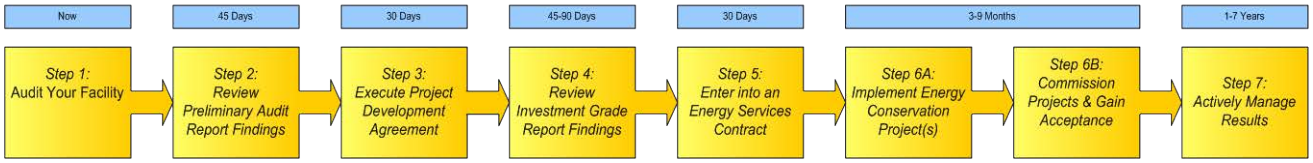

The typical steps to proceed with this program are as follows:

1. Owner confirms their interest in the EERE Project Development Program and authorizes MacDonald-Miller to proceed with a preliminary energy assessment. The results of the preliminary audit will establish a benchmark (basis of energy performance), a building energy use intensity (EUI) via the EPA Energy Star Portfolio Manager as well as identify areas of greatest potential to reduce energy consumption and corresponding budget costs to implement. The audit will address the mechanical and electrical systems inclusive of HVAC, lighting, water and other energy consuming systems.
2. Using the results from the preliminary audit MacDonald-Miller will deliver a proposal to the client outlining project economics, engineering, financing and contracting arrangements. The proposal shall be refined in consultation with the client to define the ideal energy efficiency investment program that supports the client's decision to proceed.
3. MacDonald-Miller and the client enter into a binding Project Development Agreement (PDA) committing the client to implement the project or pay a fee for the MacDonald-Miller engineering work that results from this effort. This commitment is contingent on MacDonald-Miller delivering an investment grade audit report complete with detailed engineering and pricing that meets the defined economic and financial parameters. The pricing will include available utility incentives (grants and rebates) and other federal, state and private funding sources.
4. After review of the investment grade audit report with the Owner, MacDonald-Miller and the Owner negotiate a project agreement to implement the approved energy efficiency measures.
5. Execution of these measures will be followed by closing of project financing and start of construction. MacDonald-Miller will guarantee project completion according to specifications and agreed commissioning and acceptance protocols. After commissioning, MacDonald-Miller will provide savings monitoring and verification and other agreed services.

12.0 Marketing Approach for DES Energy Program

The ESCO's approach to marketing the DES Energy Program to potential client agencies in conjunction with DES personnel.

MacDonald-Miller Facility Solutions has long-standing business relationships with many municipalities, public districts and government agencies. As a qualified and active partner of the State's Energy Saving Performance Contracting program we will offer this program as a proven means of making their facilities more energy efficient.

Our proposed approach will build on our successful sales and operations teams. We will inform our current and target public sector customers of our relationship with the GA through:

- One-on-one consultation.
- Trade shows.
- Educational seminars.
- Direct advertisement.

Specifically, MacDonald Miller is currently in discussions with many municipalities at various stages of project delineation and across a broad spectrum of scopes. The project scopes under discussion range from large central utility districts/plants

© Copyright 2013, MacDonald-Miller Facility Solutions

in the $25 million range to smaller energy efficiency upgrades to mechanical equipment in the $150,000 range. In the public sector, MacDonald-Miller is specifically targeting municipalities, ports of call, community colleges and select Agency occupied/developer owned properties. We have engaged the firm of Amendola Enterprises and Cyan Strategies to assist in the development of energy efficiency and renewable energy projects within Washington State.

Another demonstration of support is our participation in the various energy conferences where MacDonald-Miller has openly promoted the services of the State's ESPC program and WSU Energy Extension. Additionally, we plan to conduct professional workshops as well as leverage our Seattle Steam partnership which is focused on the implementation and management of on-going steam conservation projects.

13.0 Minimum Size Project Viability

What is the minimum size project your firm would consider viable.

As a service-based contractor, MacDonald-Miller is built to handle the smallest to the largest of projects. Our scale ranges from $150 work orders to $30 million design/build/deliver performance-based contracts. There are minimal restrictions on our ability to deliver cost effective solutions for a project of any size and complexity.

14.0 Approach to Effective Communication with the DES Energy Program

The ESCO's approach to effectively communicate project information with the DES Energy Program prior to sharing with client agency.

MacDonald-Miller respects and fully understands that first point of discussing project related items is with our designated DES project representative. We value this reporting relationship and make our best effort to making sure all project related sensitive items are reviewed prior to discussing with the Agency representatives.

15.0 Approach to Project Development from Marketing to Delivering

The ESCO's approach to project development from marketing to delivering the ESP.

This item seems to be closely aligned with Section 11.0, so the below project development process map is intentionally repeated.

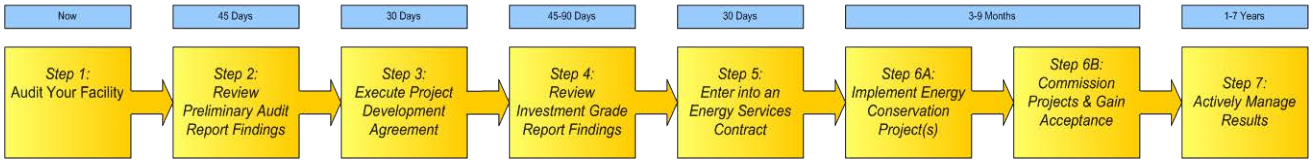

Our marketing efforts cover all available private and social forums. MacDonald-Miller personnel are actively engaged in our local communities and trade organizations. These efforts have made us one of the largest regional services providers in Washington State. This extensive service base and our business objectives to continually grow our market penetration are primary sources for new ESPC opportunities.

16.0 Contracting Methods and Cost Competitive Pricing

The method for contracting the installation of the measures, maintain cost competitive pricing and whether the ESCO uses open book pricing.

Methods of Contracting

Providing the highest value at the lowest cost with proven budget and schedule control is at the core of our contracting methods.

Our preferred contracting method is to self-perform a significant amount of the overall mechanical and electrical work for the specific purpose of controlling the variables that can affect project labor, schedule, effectiveness and quality of the results. We also may have subcontractors performing portions of work scope and because of this we will implement specific processes to create an integrated execution plan for our own forces as well as our subcontractors. The selection of

© Copyright 2013, MacDonald-Miller Facility Solutions

materials and specialty contractors are based on an Owner approved qualified list of providers and are competitively secured.

MacDonald-Miller has had significant experience with both negotiated lump sum and guaranteed maximum price (GMAX) contracting methods. Each method is completely open book with the negotiated lump sum method being simpler to administer. We are open to either contracting method.
Developing a detailed scope of work and reliable budget pricing at an early stage of design is a strength of MacDonald-Miller. The historical cost systems we have in-house provide us with the ability to budget multiple design sets to help the owner make informed decisions on their HVAC and Lighting systems improvements in terms of not only cost, but also long term performance.

Maintaining Cost Competitive Pricing
The first step in our process is establishing a responsible and well thought out conceptual estimate based on site observations, data, mechanical narratives and drawings. In the early stages of the project as programming is taking shape we will review system options that could apply to the HVAC, plumbing, and lighting systems that will reduce cost and not sacrifice value, quality, speed, or efficiency of installation or system operation. We will provide detailed estimates with each major document release as well as quick turnaround on cost saving ideas so the client and the GA Representative can expedite decisions.

The full service budget pricing will contain competitive pricing. All of the major equipment will be priced competitively. Even the flat stock sheet metal we use to fabricate our ductwork is competitively priced at least once, if not more often during a calendar year. MacDonald-Miller typically seeks quotations from three (3) qualified providers to assure competitive prices are obtained for all major equipment purchases and insulation subcontractor selections. We will also keep an eye on the commodities markets and provide input on when materials should be purchased to keep escalation costs to a minimum. The quotes will be presented with a recommendation that outlines the value of the equipment and the pro's/con's from each manufacturer. In addition, we have utilized pre-emptive purchasing of piping and sheet metal commodities as successful strategy for avoiding material escalations. Many of the local suppliers we work with will make inside storage space available and deliver the materials when required. With certain commodities we have been successful in locking-in pricing levels for a project without taking early delivery and providing early payment. To avoid additional costs for equipment prior to shipment we will integrate the equipment installation details within our shop drawings which are based on certified equipment submittals.

Use of Open Book Pricing
MacDonald-Miller strongly supports the use of open book pricing. In fact, this is our preferred method of price validation. MacDonald Miller will openly share its cost, overhead, and profit structure with both the Owner and General Administration. As a recipient of $4.0 million in ARRA monies, transparency in cost and delivery of results are an integral component of our business obligations.

17.0 Procedures for Timely Closeout

The ESCO's procedures for timely closeout of construction projects delivery of O&M manuals, commissioning reports and other pertinent paperwork to the DES Energy program and the client agency.

All project closeout procedures follow the LEAN process. The Owner's O&M Manual is delivered prior to project acceptance. Refer to the below for a graphical representation of our project closeout and acceptance process.

© Copyright 2013, MacDonald-Miller Facility Solutions

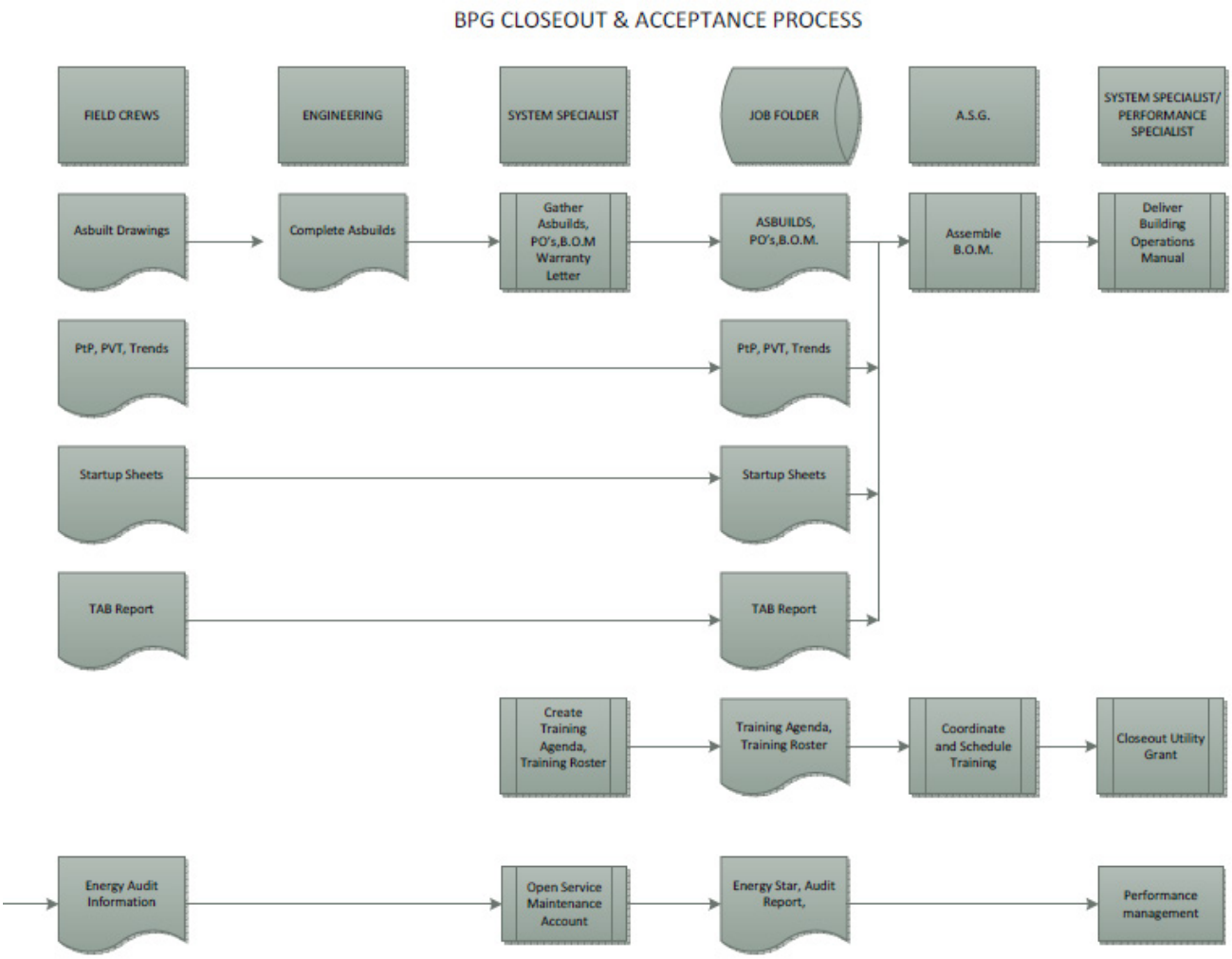

18.0 Procedures for Timely Submittals

The ESCO's procedures for timely submittal of required documentation to Departments of Revenue, Employment Security, and Labor and Industries.

The timely delivery of the project submittals are baked into MacDonald-Miller's LEAN-based project delivery process. Work does not typically start until the work package submittals are fully reviewed and accepted by all the designated people. Since we are motivated to start and finish the work in order to get paid for our efforts, the timeliness of our engineered submittal is of upmost priority. MacDonald-Miller is actively involved in Federal, State and Local programs which require timely and extremely detailed submittals. As such, we have built our business processes to be responsive to the most demanding expectations.

19.0 Approach to Risk Mitigation

The ESCO's approach to mitigate risks associated with guaranteed cost, savings, and performance.

Our approach to risk mitigation starts with our initial building assessment. Executing this initial phase of a project's development to minimize any savings and performance related risks is crucial. As such, our building assessment process is much more robust than required by the State's ESPC program in order to mitigate the risk of missed expectations. Refer to Sections 11.0, 17.0 and 27.0 for additional detail on our highly-effective project management and M&V process which mitigates the risk of delivering the expected results.

© Copyright 2013, MacDonald-Miller Facility Solutions

20.0 Approach to sharing EPACT Tax Credits

The ESCO's approach to sharing EPACT tax credits with client agencies.

MacDonald-Miller has not completed any EPACT Tax Credits. In the situations where this tax credit applies we have engaged our financial advisors to work directly with the Owner's financial representatives to determine the best course of action. From MacDonald-Miller's perspective, the EPACT Tax Credit is considered the Owner's money and will be credited from the total project cost less any financial consulting fees.

21.0 Experience and Approach to Meeting

The ESCO's experience and approach to meeting the public works requirements for apprenticeship training programs as directed by Chapter 39.04.320 RCW.

MacDonald-Miller is fully compliant and capable of meeting the apprenticeship training requirements as set forth in Chapter 39.04.320 RCW. We have had zero compliance issues with the State. In fact, MacDonald-Miller is actively engaged and compliant in a City of Seattle Community Workforce Agreement (CWA) which goes beyond the requirements of the State's requirements.

22.0 Minority and Women Owned Business (MWBE)

How Miniorty and Women Owned Business (MWBE) enterprises will be utilized on the project.

MWBE providers such as Fair Building Technology, Gana-A' Yoo Service Corporation and JA Energy Services are considered strategic business partners of MacDonald-Miller Facility Solutions. Our long term relationships with select MWBE providers have been a positive contribution to our business. Much of this success is based on the fact that we choose to conduct business together on a continual basis, not just when we are required to do so. Thusly, the General Administration can be 100% assured that our MWBE providers will have an equal opportunity to provide pricing and products for plumbing, lighting, insulation and HVAC materials, equipment, and fixtures without a premium being paid by the Owner.

23.0 Policies and Procedures for Recycling Materials

The ESCO's policies and procedures for recycling materials such as lamps, ballasts, fixtures, ceiling tiles, and other recyclable material.

MacDonald-Miller is committed to the principle of environmental stewardship. Our involvement in this program will be congruent with this value. We have policies and procedures set in place for efficient material usage and recycling materials such as lamps, ballasts, fixtures, ceiling tiles and other recyclable materials.

- MacDonald-Miller includes a recycling component in planning comprehensive waste management strategies for all projects.
- Through our lean processes, we are actively reviewing and minimizing the amount of waste generated during construction.
- When removing material from a job site we divert as much material as possible from the waste stream through recycling opportunities and reuse/salvage where applicable.
- MacDonald-Miller is familiar with the LEED process and understands the importance of recycling and diverting materials from the waste stream.

MacDonald-Miller works with a recycling service to ensure that the maximum practical amount of materials are diverted from landfills and sent to recyclers. The bulk of this work will happen during demolition, but will also continue throughout the project to ensure that temporary materials used for construction are also recycled where possible. Additionally, MacDonald-Miller maximizes efficient use of materials by prefabricating as much as possible in our production facility where material usage is more efficient than on the job site.

Non-hazardous equipment, metal, construction debris and packaging in small quantities are returned to MacDonald-Miller locations for disposal in recycle containers. Large quantities of recyclable non-hazardous waste are transported directly to a recycler. At USGBC LEED projects, MacDonald-Miller uses the jobsite supplied recycle dumpsters or the waste is returned to a MacDonald-Miller location and disposed in recycle containers.

© Copyright 2013, MacDonald-Miller Facility Solutions

24.0 Hazardous Material Handling

How potential hazardous materials encountered in the installation of energy efficiency measures will be managed; and whether the ESCO has been cited by Washington Department of Ecology, Federal Environmental Protection Agency, or any other regulatory agency for inappropriate handling, transportation or disposal of hazardous materials.

MacDonald-Miller Facility Solutions is committed to managing health, safety and environmental (HS&E) matters as an integral part of our business. We plan to meet or exceed all the environmental legislation that relates to the Company. In particular, it is our policy to assure the HS&E integrity of our processes and facilities at all times and at all places. MacDonald-Miller accepts responsibility for the harmful effects its operations have on both the local and global environment and is committed to reducing them.

MacDonald-Miller has never been cited by the Washington Department of Ecology, Federal Environmental Protection Agency, or any other regulatory agency for inappropriate handling, transportation or disposal of hazardous materials. Our policies and programs ensure the appropriate disposal and handling of hazardous materials. We have a full time Safety Director which is available to assist with any questions or evaluation of suspect materials and/or safe handling procedures.

MacDonald-Miller complies with local, state and federal hazardous disposal and recycling requirement for materials removed from existing facilities during service and retrofit work. Hazardous materials and equipment containing hazardous materials are documented when removed from the work site.
Hazardous material or equipment with hazardous material is transferred to an approved recycler for the recycling of materials, disposal of hazardous waste extracted during the recycling process and disposal of non-recyclable materials.

Periodic evaluations of every work site shall be made to determine the degree of risk arising from exposure to chemical, physical, or biological agents. All work areas shall be evaluated by the Safety Director or other designated competent person (e.g. Industrial Hygienist).

Areas of potential hazard include:

Air Contaminants
Potential health hazards of air contaminants resulting from industrial operations shall be evaluated by the Safety Director or other designated competent person. The Safety Director shall determine what air contaminants should be evaluated further through the use of industrial hygiene monitoring.

Any initial or baseline monitoring shall consist of air monitoring in multiple locations within each worksite depending upon layout and repeated under varying conditions. Changes to the work environment and the continuing effectiveness of engineering controls shall be determined through follow up monitoring. Personal monitoring shall be utilized to the fullest extent possible.

When the results of the air monitoring reveal air contaminants at concentration equal to or greater than one-half the personal exposure limit (PEL), engineering controls shall be implemented where feasible to reduce the contaminant level.

Respiratory protection shall be worn in areas with air contaminant concentrations above the threshold limit value (TLV) or the PEL when engineering controls and/or administrative controls do not resolve first. Applicable engineering and/or administrative controls shall continue to be implemented during the use of respiratory protection.

Control devices on equipment shall be regularly inspected and tested. The Safety Director shall evaluate the control techniques and their effectiveness on controlling air contamination. Work site management shall immediately inform the Safety Director of any changes that may affect contaminant concentrations.

Asbestos
MacDonald Miller Employees that work in the proximity of asbestos containing materials will be required to attend annual 2 hour training class on asbestos awareness. Anyone that could possibly be exposed either thru sales calls, pre job visits or performance of normal work duties will be required to go thru training.

© Copyright 2013, MacDonald-Miller Facility Solutions

It is the policy of MacDonald Miller to not have our employees work with or disturb asbestos. Once asbestos has been indentified an approved removal company will be called in to remove and clean the area. Workers are not allowed to resume activities in that area until clearance sampling has approved the area as safe.

When working in buildings constructed before 1980, a good faith survey will be obtained from the building owner or general contractor by an accredited inspector as required per WAC 296-62-07721-1-c-ii. Workers will understand many areas are not always surveyed for different reasons and they need to be vigilant for possible asbestos containing materials that may not have been accessible or a part of the good faith survey.

PCBs and Fluorescent Bulbs
MacDonald Miller Employees that work with material potentially containing PCBs and Fluorescent Bulbs will be required to attend annual training for awareness of these materials. It is the policy of MacDonald Miller to not have our employees excessively handle or dispose of these materials. Once these materials have been indentified and quantified, MacDonald-Miller hires an approved handling and disposal company which is currently Waste Management, WM LampTracker 2. Additionally, MacDonald-Miller will coordinate with the building operators to work within their existing disposal plan.

Fuel and Chemical Spills
Absorbent material will be available at all fueling locations, and on all equipment in the event of a fuel, oil or hydraulic leak. The contaminant will be cleaned up and brought back to the shop for general disposal with our regular service if 5 gallons or less. Anything larger than that will be done through a private abatement contractor. Employee safety will be first, with immediate decisions being made by the foreman on how to best reduce employee exposure to the fumes and still mitigate the disaster. Respirators should be available when working with large quantities that could create a hazardous spill.

© Copyright 2013, MacDonald-Miller Facility Solutions

COMPUTATION OF ENERGY BASELINE AND POST-INSTALLATION ENERGY USE

25.0 Methodologies for Energy Analysis

The methodology used to compute Baseline energy use and saving of different types of EEMs. This should include a description of various software tools that are utilized in the calculation process. Include the methodology used for campus settings that are master metered.

Methodology to Compute Baseline Energy Use

One of the initial steps of every energy efficiency project is to quantify the building baseline based on historical (typically three years) utility consumption and cost, weather conditions and building use. Based on the complexity and amount of data available, multiple tools may be used to analyze and establish the utility baseline:

- Trane TRACE 700 or DOE2 Simulation Software. Comprehensive energy modeling toolsets based on hourly weather data. Used primarily for energy modeling of central energy plants and complex building systems (with or without dedicated utility metering) as well as investment grade studies and lifecycle modeling.
- Custom Worksheets. These worksheets enable analyses based on cooling/heating degree days, data regression, utility rate changes, use changes and the like. Specific modules include BIN-based energy modeling capabilities for quick and relevant energy analysis.
- EZ Sim and E-Quest. These tools can be useful during the initial analysis and budgeting stages of a project. Typically, we do not use these tools unless requested or required by the Owner since the above tools are more robust and familiar to the Energy Engineers.
- EPA Energy Star Portfolio Manager. Used to establish a nationally recognized Energy Use Intensity (EUI) and, when available, Energy Star Rating (ESR).
- Seattle Climate Partnership Carbon Calculator and other similar carbon calculator tools. Used with Owner's that desire to measure improvements in carbon reduction (metric tons). The carbon calculators are used in conjunction with one of the above energy modeling tools.

The empirical energy models are calibrated to the monthly historical utility consumption information. All identified energy conservation measures are calculated utilizing the calibrated baseline model. As a standard business practice, we make all the detailed input and analysis information available for review and approval.

Methodology for Calculating Post Installation Savings

Achieving and validating post installation savings is a primary focus of MacDonald-Miller. Actualizing, if not exceeding, the empirical targets that are established during the auditing process is what our post installation validation processes are designed to accomplish as well as effectively measure and communicate to all Stakeholders.

In addition to following the guidelines of the International Performance Management and Verification Protocol (IPMVP), MacDonald-Miller has developed a highly effective Energy Optimization Report Card. At the origin of this report card is the fact that there is no better measurement of performance than a validated, monthly utility statement/bill.

With the energy optimization tool, the costs and consumption of multiple utilities are tracked while observing the total cost effect of utility rate structures. This information is compared to regional weather conditions to give a true value (avoided cost) for a facility. In addition, the base year energy usage is evaluated with current rate structures to understand the total savings per square foot of the facility. Not just the dollar value; but, rather the percentage of energy saved is also stated. No other tracking tool will give you this concise useful information in one package. The Energy Optimization Report Card information is discussed further in Topic 20.

Equipment & Personnel Capabilities to Measure Energy Usage

MacDonald-Miller relies on industry accepted tools, transparent methods and sound engineering practices to develop baselines as well as measure and communicate the results. We strive to make our processes highly accurate, easy to understand by all Stakeholders and verifiable.

Our data gathering instruments are comprehensive and summarized in the following table.

© Copyright 2013, MacDonald-Miller Facility Solutions

Data-Logging and Metering Equipment			
1	Temperature Meters	11	Ultrasonic Test Instruments
2	Humidity Meters	12	Infrared Measurement
3	Wind Meters	13	Plug Load Watts
4	Refrigerant System Meters	14	Photo Tachometer
5	Current (Three Phase and Single Phase)	15	Lighting (FC levels)
6	Occupancy	16	Gas Meters (CO_2, CO, etc.)
7	Non-Contract Temperature Probe	17	Sound (DB)
8	Motor on/off (Vibration)	18	Lighting Discriminator Magnetic vs. Electronic Ballast
9	Motor on/off (Magnetic)	19	Boiler Efficiency Testing
10	Ventilation Air Flow Hoods	20	Air and Water Balance Equipment

MacDonald-Miller provides a full range of data-logging and metering solutions that provide:

- Load use profiles.
- Demand profiles.
- Allocation of consumption and costs to tenants and/or facilities.
- Baseline or Key Performance Indicators (KPIs).
- Post construction metering of implemented energy conservation measures.

Data-Logging or metering equipment that is needed to support project requirements, not in our equipment inventory, are purchased or rented on an as-needed basis.

All system and balance technicians as well as engineering personnel at MacDonald-Miller are trained on the proper application and use of the identified data-logging and measurement instrumentation. Refer to Topics 4.0 and 5.0 for a representative list and description of qualified team members.

Process when Buildings are Mastered Metered

The absence of individual building metering is not uncommon in many industrial and manufacturing facilities throughout the Pacific Northwest. When encountered at such facilities as Boeing, Joint Base Lewis-McChord, Bremerton Naval Shipyards and Navy Base Kitsap, we have handled by establishing:

- Measure-specific baselines. This is accomplished by isolating and measuring the energy consumed by a specific conservation measure.
- Assign a percentage of the substation meter to the associated buildings. The percentage split is typically based on building use, square footage and building operating hours. This process generally provides the accuracy necessary for a qualitative scope of work and energy savings.

The extent of the comprehensiveness of the data collection process will be proportionate to the magnitude of the potential investment. In general, every effort is made to gather as much information to document the merits of a specific measure – kilowatts, flow rates, pressures, temperatures, run time, efficiency, functionality and operating conditions.

Whenever possible, utility metering on a building basis is strongly recommended and encouraged. It is understood that utility meters do not save energy; however, they are an invaluable and cost effective tool for measuring consumption which establishes an Energy Use Intensity (EUI) for a giving building, system or process. This in turn, will assist in building a business case and drive the implementing as well as measurement of energy efficiency and conservation practices.

Due to our working knowledge of building automation systems and data logging instruments; ever effort is made to use the best, most reliable approach to gathering the pertinent data in order to quantify the operational characteristics of a particular system or piece of equipment. At minimum, seven consecutive days of data is recorded at an appropriate periodicity. The periodicity is based on the type of data and the requirements set forth by the Utility Company. Data periodicity is typically at 15 minute intervals for energy consumption sensitive measurements and less frequent for measurements such as temperatures and pressures that are not time sensitive for synchronization with the energy consumption measurements.

© Copyright 2013, MacDonald-Miller Facility Solutions

26.0 Scenarios Where Modified Baseline May Be Proposed

Describe potential scenarios where a modified baseline may be proposed.

Modified baselines are necessary when there is a major repurposing or operational change of a specific space or building. Adjustments are typically due to measurable changes in space utilization which result in energy use intensity variances of 5% or greater from the Facility's current energy use intensity. Evaluation of the adjustment historically occurs as a result from spaces being re-purposed including office to data center, data center area changing to office, changes to major systems and pieces of equipment such as lighting upgrades. The adjustment to the base year for measurable changes in space utilization shall be agreed to by all parties and documented in the Utility Analytics Report Card within 90 days from the substantial completion of the space use change. Refer to Section 27.0 for additional detail regarding the energy verification and reporting process.

27.0 Utilization of M&V Processes

Describe the ESCO's utilization of M&V processes in the establishment of baseline energy use and the post installation energy use.

MacDonald-Miller develops a detailed measurement and verification program as an integral task of the project development process. The utility analytics tool used during the preliminary assessment phase is used to validate and report results on a monthly basis post acceptance of the improvements. The program includes an on-going performance management and reporting procedure that adheres to the International Performance Measurement and Verification Protocol (IPMVP).

A comprehensive reporting system (Report Card) is used to evaluate the energy performance of the owner's facilities. The energy reporting process complies with IPMVP, Option C. The costs and consumption of multiple utilities are tracked, while observing the total cost effect of utility rate structures. This information is normalized to regional weather conditions to give a true value, which is defined as avoided energy cost, for the facilities. In addition, the base year energy usage is evaluated with current rate structures to understand the energy cost savings per square foot.

The Report Card is also used for the purpose of understanding the financial and energy impact for services and physical improvements to the facility systems. The energy savings and reporting methodology has been developed to communicate financial information to accountants as well as a diagnostic tool to evaluate the facilities' energy use by Certified Energy Managers (CEM). The reporting process provides a qualitative and quantitative analysis of utility performance based on facility type, usage, square footage, and historical utility information.

The numerical and visual aspects of the Report Card process allows for a more clear understanding into the energy usage of the facilities. By comparing historical usage (base year) to the current usage, the effectiveness of implemented energy conservation measures and services can be verified as well as reported in a meaningful manner. Trends in energy usage over time are also documented and forecasted when normalized with published weather information.

The following performance indices are tracked and reported on a monthly basis: demand ratio index (DRI), energy use index (EUI), Energy Star Rating (ESR), cost per square foot, aggregated annual energy cost, increase in the cost of utilities over time, equivalent carbon emissions, and load factors of each utility respective of monthly usage. Financial data such as simple pay back (SPB), return on investment (ROI), internal rate of return (IRR), and net present value (NPV) are also reported. These indices provide a clear and concise evaluation of the facilities' performance.

All utility types are converted to a common value expressed in kBtu for the purpose of understanding energy cost and usage. Demand, peak electrical consumption, is tracked to understand the impact on the utility bill as well as to better understand the facility utility footprint. This information is helpful in controlling facility utility cost by providing better equipment management insight to the programmed sequences of operation.

Furthermore, an aggregated energy cost is given to track the total cost of utilities over time. By incorporating this method, it is much easier to understand the cost of a given utility expressed in cost per MBtu. This data is essential in evaluating which energy source is the most cost effective for the unique characteristics of the facilities.

© Copyright 2013, MacDonald-Miller Facility Solutions

In addition to energy and utility information, the Report Card provides equivalent carbon emissions results. The carbon equivalents are based on published reports by the local utility companies and the United States Environmental Protection Agency (US EPA) Greenhouse Gas Annual Output Emissions Rates.

Regional weather conditions are tracked daily and aligned with each utility bill. This information is then parsed based on the utilities individual load factor for that month after the base load has been removed from the aggregated value. Each utility degree day factor is then added together thus insuring the most accurate measure of the effect of weather on the Facilities utility consumption. Monthly adjustments in avoided energy costs are made based on the following variables:

- Utility rate changes.
- Annual heating and cooling degree days.
- Facility operating baseline hours.
- Changes in occupancy levels and facility use.

The base year energy profile shall be reviewed on a monthly basis. Identified operating anomalies shall be reported by MacDonald-Miller to the designated Facility personnel. Any mutually agreed adjustments to the base year energy profile shall be noted and incorporated into the Report Card. Adjustments shall be due to measurable changes in space utilization which result in energy use intensity variances of 5% or greater from the Facility's current energy use intensity. Evaluation of the adjustment shall occur as a result from spaces being re-purposed including office to data center, data center area changing to office, changes to major systems and pieces of equipment such as lighting upgrades. The adjustment to the base year for measurable changes in space utilization shall be agreed to by all parties and documented in the Report Card within 90 days from the substantial completion of the space use change.

Areas of high energy intensity such as data centers, server rooms, or process loads that consume 2% or greater of the respective utility's monthly usage will need to be quantified via an engineering analysis or sub-metered. If Customer desires a US EPA Energy Star Rating (ESR) certification, any high-energy use, internet-technology (IT) spaces will require electrical sub-metering.

MacDonald-Miller shall provide on a monthly basis a Report Card similar to the one below to the Customer for the purposes of reporting and validating results. Additional energy improvement enhancements and equipment operating issues are reported as they are identified.

© Copyright 2013, MacDonald-Miller Facility Solutions

Sample of MacDonald-Miller's Utility Analytics Monthly Report Card:

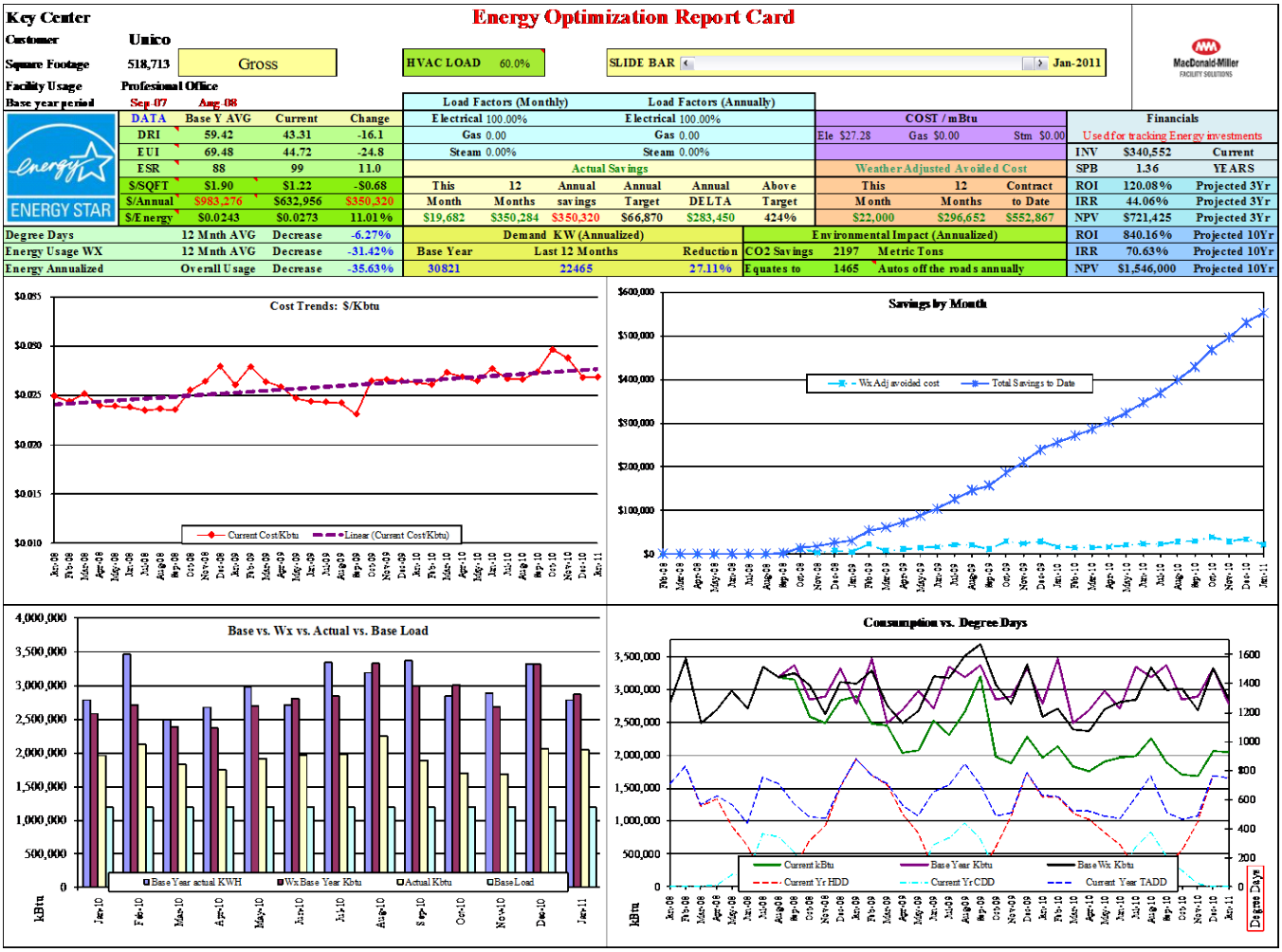

Glossary of Terms	Description
Annual Savings	The difference in energy consumption of the 12 month contiguous period (base year) under consideration less the current 12 month contiguous period (current year) multiplied by the current annual utility costs.
Avoided Costs	The cost of utilities that didn't have to be paid. These amounts are base-year consumption corrected to the current Occupancy and current year Degree Day (Wx) consumption. Less the current consumption, multiplied by the current costs.
Btu	British Thermal unit. The British thermal unit (BTU or Btu) It is approximately the amount of energy needed to heat one pound of water one degree Fahrenheit
Carbon footprint	Many of our actions generate carbon emissions, which contribute to accelerating global warming and climate change. This is called our carbon footprint an indication of the effect we have on the climate in terms of the total amount of greenhouse gases we produce (measured in units of metric tons (M/tons) of carbon dioxide).
Cooling Degree Days	To calculate Cooling Degree Days (CDD), take the average of a day's high and low temperatures and subtract 55 from the total. For example, if the day's average temperature is 70o F, its CDD is 15. If every day in a 30-day month had an average temperature of 70o F, the month's CDD value would be 450 (15 x 30).
Demand	Maximum load (KW) for a 15 minute increment in a one month period
DRI	Demand Ratio Index is the Annual Demand divided by the Gross square footage multiplied by 1000. The best all electric buildings are in the High 30's to low 40's
Energy Star	The US EPA's ENERGY STAR program has developed energy performance rating systems for several commercial and institutional building types and manufacturing facilities. These ratings, on a scale of 1 to 100, provide a means for benchmarking the energy efficiency of specific buildings and industrial plants against the energy performance of similar facilities. The ratings are used by building and energy managers to evaluate the energy performance of existing buildings and industrial plants. The rating systems are also used by EPA to determine if a building or plant can qualify to earn ENERGY STAR recognition. This rating is weather corrected for all regions and will apply across the nation. If your building scores a 75 in Seattle it will also score the same in any city in the United States. The EUI however will change based on region and weather conditions.
EUI	Energy Use Index. This is the annual energy consumption in kBtu divided by the gross square footage for the facility.
Heating Degree Days	To calculate Degree days (HDD), take the average of a day's high and low temperatures and subtract from 65. For example, if the day's average temperature is 50o F, its HDD is 15. If every day in a 30-day month had an average temperature of 50o F, the month's HDD value would be 450 (15 x 30).
kBtu	1000/Btu
KWH	Kilowatt Hours
LEED	LEED EB O&M LEED points associated with energy star rating. Minimum points = 0 Max = 18 Prerequisite of ESR 69... points allotted above ESR of 71. One exemplary performance point possible for ESR 97 and higher not calculated in this work book. One exemplary performance point possible for ESR of 97 and higher not calculated also not calculate din this sheet. Depending on a buildings regional location 1 additional point maybe available for projects with an ESR of 95 or higher (regional priority credit) also not calculated here.
Load Factor Kwh/DMND	The electrical load factor (the ratio of the average load to the peak load) The ratio of the average load in kilowatts supplied during a designated period to the peak or maximum load in kilowatts occurring in that period. Load factor, in percent, also may be derived by multiplying the kilowatt-hours (kWh) in the period by 100 and dividing by the product of the maximum demand in kilowatts and the number of hours in the period. Example: Load Factor Calculation - Load Factor = kilowatt-hours/hours in period/kilowatts. Assume a 30-day billing period or 30 times 24 hours for a total of 720 hours. Assume a customer used 10,000 kWh and had a maximum demand of 21 kW. The customer's load factor would be 66 percent ((10,000 kWh/720 hours/21 kW)*100).Load Factor Simply, the load factor is the actual amount of kilowatt-hours delivered on a system in a designated period of time as opposed to the total possible kilowatt-hours that could be delivered on a system in a designated period of time. For example, assume that an office building uses a total of 10,000 kWh during a 30-day (720 hours) billing period and has a peak load of 25 kW during that time, making the building's load factor for that billing period 0.56, or 56 percent.//Using the same formula, a facility can also determine their annual load factor. Theoretically, if a company is able to shift operations so that their usage is constant and no peaks or valleys exist, it could achieve a load factor of 100 percent. Why load factor matters Increasing your load factor will reduce the average unit cost of the kilowatt-hour (kWh). In many situations, improving load factor could help companies save a considerable amount of money. How to increase load factor Many organizations can improve load factor by reducing demand or increasing production efficiency. Distributing loads over different times or installing energy management systems can often help. Lowering peak demand along with keeping demand stable is often a cost-effective way to maximize the use of your power.
Therm	Unit of natural gas equivalent to 100,000 Btu or 100 kBtu
TADD	Total adjusted degree days. This adjusts cooling degree day data to approximate similar heating degree days for visual comparison. Value is determined by type of cooling equipment in use.
Wx	Weather adjusted usage.

© Copyright 2013, MacDonald-Miller Facility Solutions

Continuous Energy Monitoring

Congruent with the implementation of the approved energy conservation measures, MacDonald-Miller, at the Customer's acceptance, a method for transferring critical system performance data from the facility automation systems. This continuous energy monitoring methodology assists with data harvesting and performance analytics for quantifying savings and quickly identifying operating anomalies.

This advanced level of data analytics and real-time connectivity with the Facility provides the means for implementation of predictive services through early detection of emerging faults/alarms. MacDonald-Miller's extensive service organization which is fully outfitted with hand-help mobile devices enables us to deliver the power of real-time system performance information at the fingertips of our knowledgeable, on-site service technician.

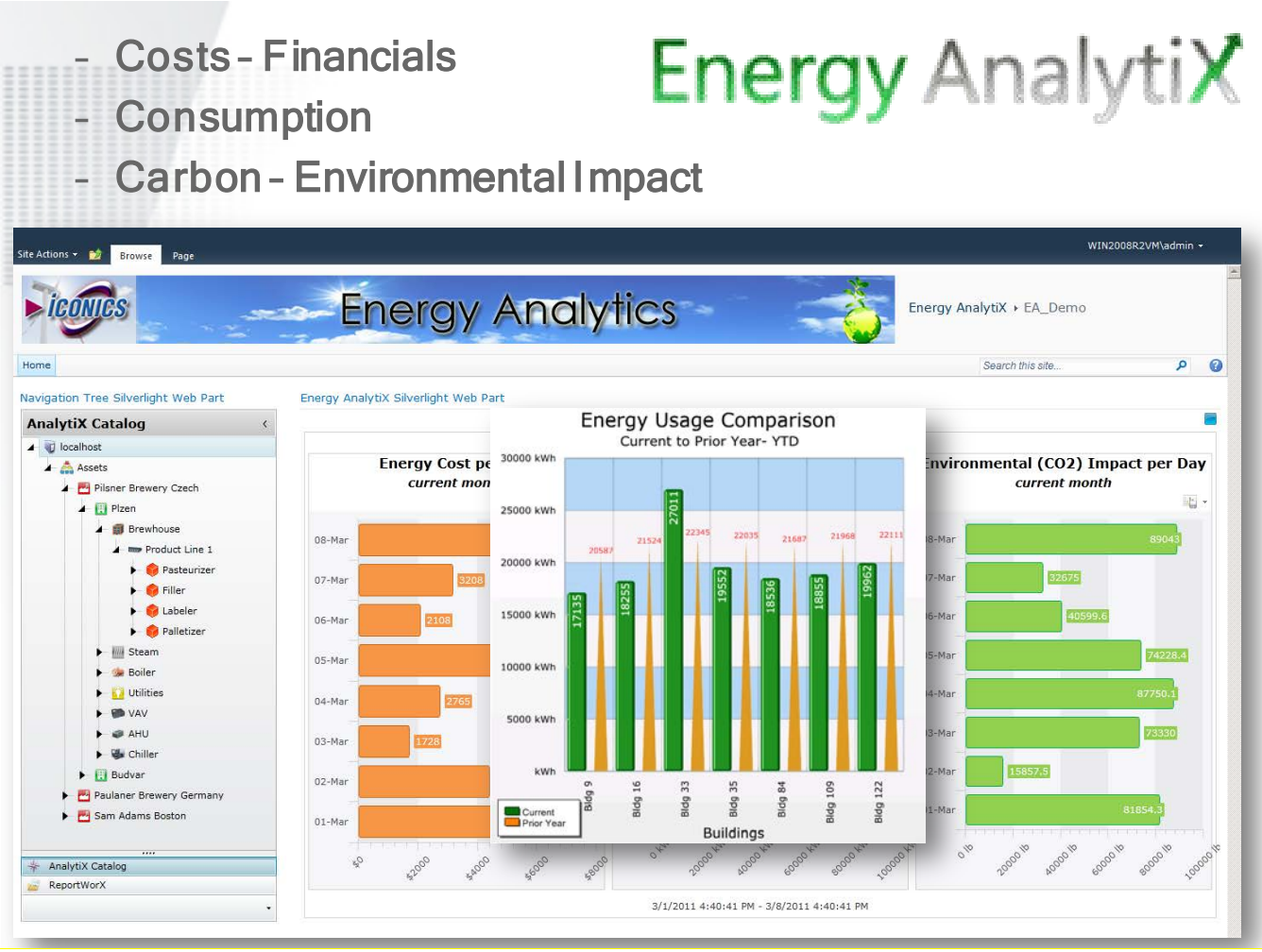

SAVINGS AND EQUIPMENT PERFORMANCE GUARANTEES

28.0 Project Cost Guarantee

The ESCO's project cost guarantee policies and procedures; including remedies when project costs exceed ESCO estimates.

Project Cost Guarantees

MacDonald-Miller will provide a guaranteed maximum price (GMAX) as part of the performance contracting agreement. This price includes the inherent risks of project execution based on a defined scope of work. In situations where we are directed to make changes to the scope of work the associated impacts, additive and deductive, will be discussed and resolved in an open-book manner. Allocation of contingency budgets for unforeseen risks, escalation and other project specific factors will be discussed and approved prior to the execution of the performance contracting agreement.

MacDonald-Miller will adhere to a transparent and detailed open-book accounting process for reporting all project costs. Identified cost savings will be credited at full value to the Owner.

Remedies When Project Costs Exceed Estimates

The Owner has no responsibility for any cost overruns for the agreed-upon scope of work and services. These risks are the complete responsibility of MacDonald-Miller. Every effort will be made to mitigate any risks and to deliver the defined scope of work on time and under budget.

29.0 Energy Savings Guarantee Policy

The ESCO's energy savings guarantee policies and procedures, including remedies when actual savings are lower than the ESCO's estimates and guarantees, and the length of the savings guarantees.

Energy and Savings Guarantee Policies and Procedures

Most Owners finance their energy projects over a period of years where the energy savings equals or exceeds the debt service of the loan. As such, MacDonald-Miller Facility Solutions will guarantee up to 100% of the specified system performance and associated energy savings that is within our control.

We typically guarantee energy consumption savings, not energy cost savings. Prevailing utility rates, adjustments based on weather conditions and changes in use corrections are used to calculate avoided costs based on the established baseline.

Remedies When Actual Savings Are Lower Than Estimates

MacDonald-Miller takes responsibility to remedy any shortfalls by correcting system performance or making a monetary payment. Any shortfall in savings will be identified by our measurement and verification program. The root cause of the shortfall will be identified and corrective action taken. If efforts are not successful and an annual energy shortfall occurs, MacDonald-Miller will pay the owner the difference.

Length of the Savings Guarantees

MacDonald-Miller understands facility uses change, equipment operation degrades and preventative maintenance priorities may shift over the finance period for the project. As such, adjustments to the baselines must be made. We will negotiate with the Owner to align the length of the savings guarantee with the specific business and financial objectives. Whether it is 12 months, 24 months, 60 months or the entire length of the debt repayment period, our measurement and verification processes are designed to meet the Owner's requirements.

30.0 Equipment Performance Guarantee

The ESCO's equipment performance guarantee policies and procedures, including remedies when performance of equipment is not met.

Equipment Performance Guarantee Policies and Procedures

MacDonald-Miller guarantees the installed equipment will perform to the specified standards. If it does not, MacDonald-Miller will make every effort to remedy the non-performance without any adverse impact to the Owner. If unsuccessful, MacDonald-Miller will engage in seeking a fair and equitable monetary adjustment based on the non-performing piece of

© Copyright 2013, MacDonald-Miller Facility Solutions

equipment. All new equipment will be tested and started by a MacDonald-Miller trained technician and/or an authorized factory representative.

31.0 Warranty Enforcement

Provide information on the ESCO's warranty enforcement role and the ESCO's responsibility, if any, when there is an equipment failure beyond the warranty period when the client agency has financed the project and assume ownership of the installed equipment

Warranty Enforcement Role

As with all projects, MacDonald-Miller warranties our workmanship and equipment for one year or for two years when a MacDonald-Miller service agreement is purchased. Equipment warranties will be honored based on the manufacturers' warranty period. MacDonald-Miller will work on the Owner's behalf to ensure that extended equipment warranties are honored by the manufacturers when they extend beyond MacDonald-Miller's typical one year or two year warranty obligation.

Post Warranty Support

We strive to earn the elite status of being identified as our client's business partner. As such, we will do whatever we can to leverage our working relationships with the equipment manufacturer's to assist with any reasonable post warranty equipment issues. If we are at fault, it will be fixed at no cost – *guaranteed*. After the warranty period expires, MacDonald-Miller is willing to participate in troubleshooting building system issues for a fee, negotiable, based on the nature of the problem or request.

32.0 Financing Ability

The ESCO's project financing ability. Describe the capability for carrying costs until completion of the installation of energy efficiency measures. Describe capability and willingness to fully finance project over a financing term including how the interest rate the ESCO would use is determined. Provide letters of commitment from funding source or from ESCO's Chief Financial Officer if self-funded. ***Tax-exempt municipal lease financing does not qualify for ESCO financing ability.***

Financial Strength

MacDonald Miller Facility Solutions is a financially strong and stable company that has an established reputation in the Pacific Northwest. Our annual revenues average $150 million. MacDonald-Miller's banking relationship includes a secured working capital line of credit of $8.0 million which is accessible for project financing.

Financial letters of support are included in Appendix 2.

Sources of Internal Business Funding

We understand that ESPC payments for public sector projects arrive after the project's phase is substantially complete and energy cost savings are being realized. Should the requirements of any ESCO project(s) exceed our existing credit line, MacDonald-Miller would secure short-term project financing and seek to recover any added costs for these funds. We would expect the added costs of this short term financing to be added to the project costs and return on investment analysis.

Sources of External Project Funding

MacDonald-Miller with our financing partner EEFC, works as an advocate for the building owner to secure the best, most cost effective sources of funding for the implementation of approved energy efficiency and renewable energy projects – *inclusive of maximizing utility incentives*. Since our business thrives on the development, implementation and service of "performing" the work; we find it vitally important to maintain a core competency in helping Owner's secure financing. We view financing as a tool to get the work executed and do not seek profit from this value added service.

It is recognized that an attractive source of funding for projects meeting the ESPC criteria is through the State Treasurer's finance program for municipal projects. Refer to Alternative Financing of for additional sources of external project funding. We will assess all sources of State, Federal and 3rd Party funding options based on the scope, Owner's objective and lowest total cost of money.

© Copyright 2013, MacDonald-Miller Facility Solutions

Appendix #1

Project Profiles

Additional Information on Request

©Copyright 2013, MacDonald-Miller Facility Solutions

Case Study:
BELLEVUE CITY HALL

MacDonald-Miller FACILITY SOLUTIONS®

General Information:

Location: 450 110th Ave NE, Bellevue, WA 98004
Owner: City of Bellevue
Building Type: Commercial Office
Contract Date: July 2011

Owner Information
Contact: Emma Johnson
Phone: 425.452.5246

MMFS Information
Account Manager: Greg Galusha
Project Manager: Stephen Wilson
Performance Engineer: Jeremy Richmond

Project Overview

Bellevue City Hall is a 391,839 square foot Facility originally built in 1982. The Facility currently supports the City of Bellevue's City Administration, Regional 911 Call Center, Council Chambers, Department of Planning and Police Headquarters. The utility conservation project included the installation of 234 garage and stairwell LED lighting fixtures with occupancy sensors, building automation system hardware upgrades, commissioning of load-based building automation programming strategies and performance management services to deliver and validate the guaranteed financial results.

Financial Information

Actual Project Cost: $253,436

Annual Avoided Costs: $67,914

Contracted Incentives: $23,777

Type of Financing: Not required on this project; funded by the City of Bellevue.

Terms of Contract: Guaranteed maximum price with a five year performance management and utility savings guarantee.

Financing Company: Not Applicable

Responsibilities

MMFS	Sub	Owner	Task
X			Complete an investment quality Building Performance Assessment
X			Design and Install Facility Improvement Measures (FIMs)
X			Identify and secure utility incentives and other available grants.
		X	Secure and provide financing
X			Commission FIMs
X			Maintain improvements after installation
X			Train Facility personnel for effective management of improvements
X		X	Monitor, measure and verify actual savings

Energy Results

The first year savings exceeded the engineered estimates by 25%. Performance management efforts have resulted in an increase in the Energy Star Rating (ESR) of 10 points which is currently at an ESR of 97. The projected five year Return on Investment (ROI) is 28.2%. Since August 2011, overall energy consumption is down 12.5% which is equivalent to a decrease in annual energy spend of $0.13 per square foot. Annual equivalent carbon reduction is 425 metric tons.

Performance Trends

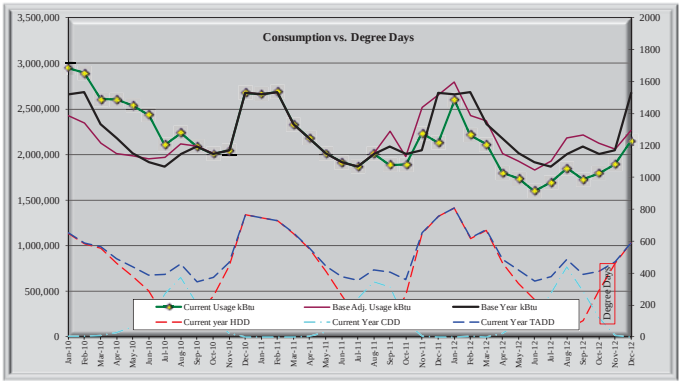

Case Study:
BELLEVUE REGIONAL LIBRARY

MacDonald-Miller FACILITY SOLUTIONS®

General Information:

Location: 1111 110th Ave NE
Bellevue, WA 98004
Owner: King County Library System
Building Type: Public Library
Contract Date: May 2007

Owner Information
Contact: Jim Worsdale
Phone: 425.396.3308

MMFS Information
Account Manager: Greg Galusha and Dan Freyling
Energy Engineer: Ed Culp
Performance Engineer: Jeremy Richmond

Project Overview

The Bellevue Regional Library is 76,950 square foot building that was built in 1992. The building uses central cooling and heating plants with distributed air handling units. The scope of this project included an investment grade energy assessment, a building automation system upgrade inclusive of load-based control strategies, objective-driven HVAC system commissioning and on-going performance management. System efficiency is continually managed via a formal Performance Management Program to insure persistence in savings. The initial energy conservation improvements were completed on time in 2007 with subsequent improvements to the building automation system completed in 2011.

Financial Information

Actual Project Cost: $210,627

Annual Avoided Costs: $64,740

Contracted Incentives: $0.00

Type of Financing: Not required on this project; funded by King County Library Systems.

Terms of Contract: Guaranteed maximum price with monthly energy reporting and performance management services.

Financing Company: Not Applicable

Responsibilities

MMFS	Sub	Owner	Task
X			Complete an investment quality Building Performance Assessment
X			Design and Install Facility Improvement Measures (FIMs)
X			Identify and secure utility incentives and other available grants.
		X	Secure and provide financing
X			Commission FIMs
X		X	Maintain improvements after installation
X			Train Facility personnel for effective management of improvements
X		X	Monitor, measure and verify actual savings

Energy Results

The Bellevue Regional Library has reduced its energy costs in excess of $0.82 per square foot. The objective-driven and validated energy retrofits have reduced the energy consumption by 31.6% for an average annual utility costs savings of $61,009. Annual equivalent carbon reduction is 838 metric tons. Comfort complaints have decreased from 50 per year to fewer than 5 per year.

Performance Trends

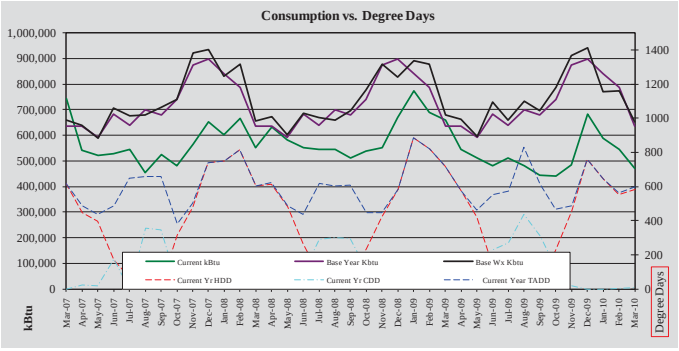

Case Study:
FEDERAL WAY CITY HALL

MacDonald-Miller FACILITY SOLUTIONS®

General Information

Location: 33325 8th Avenue South
Federal Way, WA 98003
Owner: City of Federal Way
Building Type: Office
Contract Date: November 2010

Owner Information
Contact: Steve Ikerd
Phone: 253.835.6911

MMFS Information
Account Manager: Dale Mesecher/Dan Freyling
Project Manager: Dave Martinson
Performance Engineer: Jeremy Richmond

Project Overview

This building is an Office Building covering 89,100 square feet containing the Federal Way City Hall Administration, 911 Call Center, Council Chambers, Department of Planning, Police Headquarters. The scope of the project included replacement of the two main rooftop air conditioning units, an HVAC controls front end integration project including partial VAV controller replacement and enhanced, load-based control sequence programming.

Financial Information

Actual Project Cost: $441,789

Annual Avoided Costs: $38,288

Contracted Incentives: $31,600

Type of Financing: Not required on this project; funded by the City of Federal Way.

Terms of Contract: Guaranteed maximum price for improvements with a two year preventative maintenance and energy management services agreement with an annual energy savings guarantee.

Financing Company: Not Applicable

Responsibilities

MMFS	Sub	Owner	Task
X			Complete an investment quality Building Performance Assessment
X			Design and Install Facility Improvement Measures (FIMs)
X			Identify and secure utility incentives and other available grants.
		X	Secure and provide financing
X			Commission FIMs
X			Maintain improvements after installation
X			Train Facility personnel for effective management of improvements
X		X	Monitor, measure and verify actual savings

Energy Results

First year cost savings exceeded estimates by 27.6%. Equipment replacement, controls and performance management efforts have resulted in an increase in the Energy Star Rating (ESR) of 13 points to its current ESR of 83. Overall energy consumption is down 17.5% which is equivalent to a reduction in annual energy spend of $0.34 per square foot. Annual equivalent carbon reduction is 220 metric tons.

Performance Trends

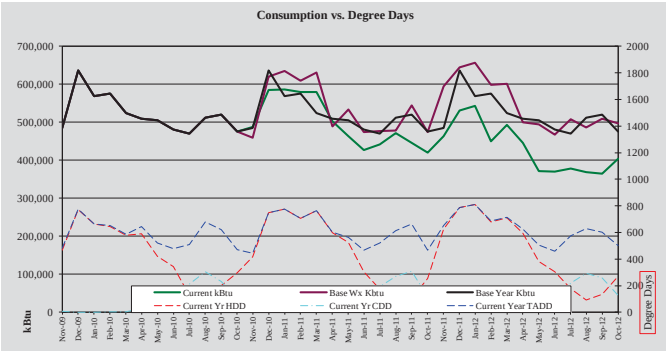

Case Study:
KEY CENTER BELLEVUE

MacDonald-Miller FACILITY SOLUTIONS®

General Information:

Location: 601 108th Avenue Northeast
Bellevue, WA 98004
Owner: Kilroy
Building Type: Commercial Real Estate
Contract Date: March 2009

Owner Information
Contact: Darrell Bell
Phone: 425.646.6251

MMFS Information
Project Manager: Lindsey Andrews
Performance Engineer: Jeremy Richmond

Project Overview

Key Center Bellevue is a 526,131 square foot Class A office tower. It includes 22 stories and 800 underground parking spaces and was built in 2000. The building has a built-up rooftop system with water-cooled central cooling plant and terminal FPVAV with electric heat. The scope of this project included an energy audit, control system improvements, HVAC retro-commissioning and building performance management. System efficiency is continually managed via a formal Performance Management program to insure persistence in savings. Project was commissioned in 2009.

Financial Information

Actual Project Cost: $399,552

Annual Utility Savings: $246,403

Contracted Incentive: $86,000

Type of Financing: Not required on this project; funded by Beacon Capital Partners.

Terms of Contract: Guaranteed maximum price with monthly energy reporting and performance management services.

Financing Company: Not Applicable

Responsibilities

MMFS	Sub	Owner	Task
X			Complete an investment quality Building Performance Assessment
X			Design and Install Facility Improvement Measures (FIMs)
X			Identify and secure utility incentives and other available grants.
		X	Secure and provide financing
X			Commission FIMs
		X	Maintain improvements after installation
X			Train Facility personnel for effective management of improvements
X		X	Monitor, measure and verify actual savings

Energy Results

Objective-driven, load-based commissioning of the building systems has resulted in a 36.9% reduction in energy consumption which is equivalent to an annual avoided cost of $328,569 or $0.47 per square foot. The Energy Star Rating (ESR) has increased by 16 points to a 97. The equivalent carbon reduction is 4,173 metric tons per year. Projected five year return on investment is 146.9%. Realized annual energy savings is equivalent to an additional $4,107,107 in asset value at a capitalization rate of 8.

Performance Trends

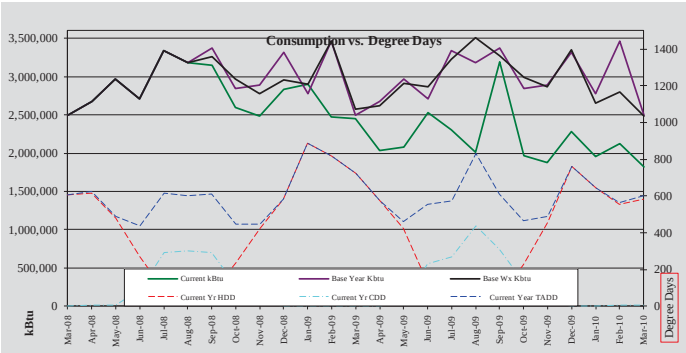

Case Study:
WASHINGTON ATHLETIC CLUB

MacDonald-Miller FACILITY SOLUTIONS®

General Information:

Location: 1325 Sixth Avenue
Seattle, WA 98101
Owner: Washington Athletic Club
Building Type: Multi-Sport Health Club, Business Center, Hotel and Parking
Contract Date: July 2011

Owner Information
Contact: Dennis Williams
Phone: 206.464.4633

MMFS Information
Account Manager: Mike Morceau
Project Manager: Brian Shipley
Performance Engineer: Jeremy Richmond

Project Overview

The Washington Athletic Club, located in downtown Seattle, Washington was built in 1930 and expanded in 1955 and 1969. The 21 story 310,000 square foot steel and masonry structure contains 113 hotel guest rooms and 5 floors of fitness amenities, with support areas that operate 24/7. The project included replacing and integrating a legacy control system with a new BACnet Building Automation System (BAS), conversion of three-way, constant volume chilled water system to a load-based, variable volume system, replacement of pneumatic actuation with electric, load-based kitchen ventilation controls and BAS programming to optimize energy performance.

Financial Information

Actual Project Cost: $1,012,368

Annual Avoided Costs: $234,814

Contracted Incentives: $244,079

Type of Financing: Meter-based with on-bill repayment through Seattle Steam Company.

Terms of Contract: Energy Services Agreement (ESA) which incorporates a guaranteed maximum price for the improvements and a seven (7) year energy verification, reporting and savings guarantee.

Financing Company: Energy Capital Solutions (ECS)

Responsibilities

MMFS	Sub	Owner	Task
X			Complete an investment quality Building Performance Assessment
X			Design and Install Facility Improvement Measures (FIMs)
X			Identify and secure utility incentives and other available grants.
X			Secure and provide financing
X			Commission FIMs
X			Maintain improvements after installation
X			Train Facility personnel for effective management of improvements
X		X	Monitor, measure and verify actual savings

Energy Results

First year energy savings projections are on target with engineered estimates which will result in a 29.1% reduction in combined electricity and steam consumption. The carbon equivalent reduction of the consumption savings is 1,058 metric tons per year or 190 cars. Energy savings per square foot is $0.75. The projected energy savings will increase the asset value of the property by an estimated $3,913,574 at a capitalization rate of 8.

Performance Trends

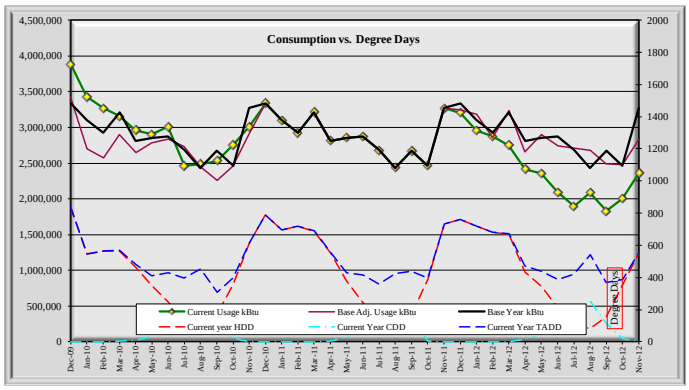

Case Study:
WELLS FARGO CENTER

MacDonald-Miller FACILITY SOLUTIONS®

General Information:

Location: 999 Third Avenue
Seattle, WA 98104
Owner: Beacon Commercial Real Estate
Building Type: Commercial Real Estate

Owner Information
Contact: Michael Webb
Phone: 206-583-2761

MMFS Information
Account Manager:
Project Manager: Mike Morceau, 206-768-3834
Performance Engineer: Dave Nieman, 206-768-3894

Project Overview

Wells Fargo Center is a mixed use Hi-Rise retail and office building covering 1,065,653 square feet. The building has a central chiller plant with floor by floor air distribution and electrical resistance heat. The scope of this project was control system modernization, central plant energy retrofit and building performance management. After project completion in 2008 MacDonald-Miller worked with the client to assume the on-going energy management responsibilities through a performance management contract.

Financial Information

Actual Project Cost: $760,397

Type of Financing: Not required on this project; funded by Beacon Capital Investment

Terms of Contract: Percent Completion Billing

Financing Company: Self Financed

Responsibilities

MMFS	Sub	Owner	Task
X			Complete an investment quality Building Performance Assessment
X			Design and Install Facility Improvement Measures (FIMs)
X		X	Identify and secure utility incentives and other available grants.
		X	Secure and provide financing
		X	Maintain improvements after installation
X			Train Facility personnel for effective management of improvements
X			Monitor, measure and verify actual savings

Energy Results

After performing the Energy Improvement Measures have improved an Energy Star rating by 13 points for a rating of 88. There are no chillers running 4-6 months of the year. Energy cost per square foot has decreased by $0.26 resulting in an annual energy reduction of 20.5%. The three year projected ROI is 37%. In addition, the building's carbon footprint has been reduced by 1,845 metric tons. Avoided annual energy cost is $277,996. Building is performing 145% better than the annual target.

Performance Trends

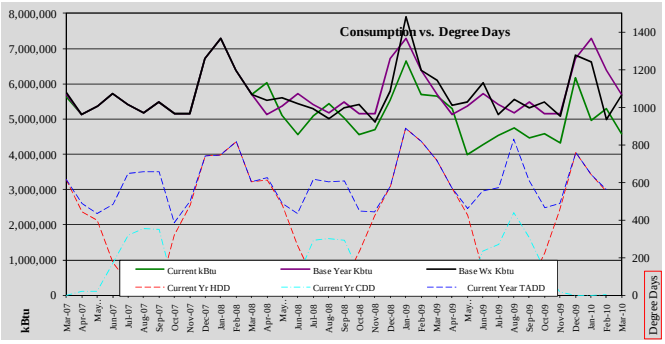

Appendix #2

Financial Support Letters

Additional Information on Request

©Copyright 2013, MacDonald-Miller Facility Solutions

February 19, 2013

State of Washington
Department of Enterprise Services
Division of Engineering & Architectural Services
Energy Savings Performance Contracting Program
1500 Jefferson
PO Box 4102
Olympia, WA 98504-1012

RE: MacDonald-Miller Facility Solutions, Inc., ESCO RFP Project No.2013-133
Energy Savings Performance Contracting (ESPC) Program

To Whom It May Concern with the ESPC Program:

This letter will confirm the relationship between MacDonald-Miller Facilities Solutions, Inc. (MMFS) and Energy Efficiency Finance Corporation (EEFC). EEFC serves as financial advisor to MMFS to structure and arrange financing for MMFS energy efficiency (EE) projects. EEFC has developed and arranged financing for two programs with MMFS, one targeting EE investments with customers of the Seattle Steam Company (SSC) and the second using tax-exempt bond financing, in partnership with the Washington State Housing Finance Commission, targeting energy efficiency projects for facilities owned by non-profit 501c3 corporations such as hospitals, YMCAs, museums and private education. These financing programs are underway and have also gained funding support of the Washington State Department of Commerce's State Energy Program and also, in the case of the SSC program, the City of Seattle's Community Power Works program. MMFS projects typically include turnkey engineering and construction, building performance services and guarantees. We have completed five transactions totaling over $5 million in EE investment for MMFS. EEFC can also structure and arrange tax-exempt lease and bond financing for projects implemented by public entities including State agencies, schools, cities, public hospital districts, etc. which are served by the ESPC program.

EEFC is privileged and proud to work with MMFS. We highly recommend MMFS for participation in the ESPC program and stand ready to assist in structuring and arranging financing for its public sector projects.

If you have any questions, please call me directly at 360-339-3936.

Sincerely,

John C MacLean

John C. MacLean
President

ENERGY EFFICIENCY FINANCE CORPORATION
+1.360.357.3757 tel. +1.206.774.0411 fax | 112 E 4th Avenue, Suite 206 Olympia WA 98501 USA | www.eefinance.net

Willis

Telephone No.: (206)386-7925
Fax No.: (206)386-7937
e-mail: john.claeys@willis.com

February 6, 2013

Ms. Kathi Fyfe
Energy Program Analyst
State of Washington
Department of Enterprise Services
Division of Engineering & Architectural Services

Re: MacDonald-Miller Facility Solutions, Inc.
ESCO RFP Project No. 2013-133

Dear Ms Fyfe:

We have the good fortune of representing MacDonald-Miller for all their surety and Insurance obligations. The company continues a long history of providing quality workmanship, on-time delivery and satisfied customers long after project completion.

MacDonald-Miller has established a surety bonding relationship with Liberty Mutual Insurance. Liberty Mutual Insurance Company is listed on the U.S. Treasury Department's Listing of Approved Sureties. Liberty has committed to a surety program that will support the business plan for MacDonald-Miller. The program includes support on single jobs in excess of $35 million. We have discussed your RFP with our client. Based on our conversations, we can provide assurance that MacDonald-Miller is prepared to provide surety bonds in support of their proposal. Naturally, we would expect an opportunity to review contractual terms as finally negotiated, as well as the financing arrangements associated with this project.

We highly recommend your consideration of MacDonald Miller as contractor for your project. If you have any further questions, please do not hesitate to call.

Sincerely,

John Claeys
Surety Manager/Senior Vice President
Willis Construction

Willis of Seattle, Inc.
505 5th Ave., S. Suite 200
Seattle, WA 98104

THE
COMMERCE
BANK

February 7, 2013

State of Washington
Department of Enterprise Services
Division of Engineering & Architectural Services
Energy Program

210 Eleventh Avenue SW
Olympia, WA 98594-1012

Attention: Ms. Kathi Fyfe, Energy Program Analyst

RE: MacDonald-Miller Facility Solutions, ESCO Qualifications
ESCO RFP Project No.2013-133

Dear Ms. Fyfe:

This letter is provided in support of the MacDonald-Miller Facility Solutions, Inc. (MMFS) ESCO qualifications, and confirms the lender relationships between Commerce Bank and MMFS relevant for the Project.

Commerce Bank has a long-standing relationship with MMFS and a $10 million line of credit available with an outstanding balance of $7.4MM. MMFS has always handled their accounts as agreed, and they are a valued client of The Commerce Bank.

If you have any questions, please call me directly at 206.292.4600

Sincerely,

THE COMMERCE BANK OF WASHINGTON

By: _____
Name: Don McGinnis
Title: Relationship Manager

cc: Perry England, MacDonald Miller Facility Solutions, Inc.

Appendix #3

Sample Energy Audit Proposal

Additional Information on Request

©Copyright 2013, MacDonald-Miller Facility Solutions

MacDonald-Miller
FACILITY SOLUTIONS

2/28/12

Barry Holldorf
Highline Community College
2400 S 240th St
MS 24-1 P.O. Box 98000
Des Moines, WA 98198-9800

Subject: Level 1 Campus Energy Audit

Dear Mr. Holldorf:

Thank you for taking the time to accompany Dave Nieman and me on a site walk of the Highline Community College campus on January 12. Our observations, both direct and through interviewing you and your staff have turned up a number of energy saving opportunities and capital improvement projects that, if performed, would help Highline Community College toward its Master Plan goals of presenting a safe, accessible, and welcoming environment and promoting environmentally sound college operations through energy use reduction.

The main opportunities identified are related to Building HVAC Controls, the heating water boiler plant, appropriate use of outside air economizer, lighting retrofits, and plumbing retrofits. The largest of these savings will only be achievable after first addressing an existing infrastructure issue. There is an ongoing pipe leakage issue with the heating water system. Old and failing seals on the campus heating water loop begin to leak when the loop water temperature is reduced. This prevents the system from being shutdown entirely during summer months when no heating load is present and prevents additional energy saving strategies that run the loop at lower temperatures when heating demand is present but minimal. Repairing this piping system paves the way for the other energy projects and also addresses maintenance and repair and possible safety issues. Repair of the heating water piping should be considered a necessity.

Once the piping system is repaired, other projects can be addressed. The recommended projects listed below have been divided in to three categories: strong energy payback, possible energy payback, and capital improvement.

<u>Strong Energy Payback</u>: These items will have a fast payback based on energy savings alone.

- Adopt a boiler temperature reset schedule including times when the boiler can be shut down entirely. This will reduce the central plant boiler load throughout most of the year and eliminate it entirely for some portions of the year.

- Air-Handling Unit economizer retrofits. A number of the building's airhandlers were found to have non-functional economizers. Repairing or replacing the economizers would reduce the amount of cold outside air that had to be heated in the winter and allow more free cooling in the spring and fall.
- Replace select plumbing fixtures with new low-flow fixtures. The aging sewer infrastructure has been reported as having had clogging issues presumed to be from low flow toilets not properly carrying waste down the main sewer lines. It is therefore recommended that only urinals, being that there is no associated solid waste, be replaced with low-flow fixtures. This would generate considerable water savings without exacerbating the clogging issues.
- Indoor lighting was not observed on a building by building basis however with the varying ages of buildings on campus there are likely many spaces in which indoor lighting improvements could be made. Improvements would range from fixture change outs to lamp and ballast replacements to occupancy and daylight harvesting controls.

Possible energy Payback: These projects do provide an energy-dollars based payback but will need to be further vetted to determine if the payback period meets the College's criteria.

- The campus has a large quantity of outdoor lighting that could be modernized to provide energy savings. There is more than one technology available that would save lighting energy. The balance between energy savings and project cost will be determined by the particular technology selected.
- Retrofit the burners and controls on the existing boilers. Retrofitting modulating burners and interfacing with a new control system will allow more precise control of the boilers and provide a higher level of efficiency.

Capital Improvement: These projects are end of life replacements or long term infrastructure improvements that stand on their own merit and while some energy savings can be shown from these measures, they do not stand up on energy savings alone.

- Repair the leaking heating water piping. As stated earlier, this project should be considered a baseline for nearly all of the energy improvement projects on the campus. Repairing this piping will save energy and resources a number of ways. The hot water that leaks out of the system must be made up, thus increasing the water bill and natural gas bill. Wet piping insulation is less effective at preventing heat loss and will deteriorate rapidly and need replacement causing additional maintenance and possible mold concerns. Leaking 180 degree water can also be a safety concern for maintenance staff. All of the boiler control strategies for energy usage reduction hinge upon the piping repairs. While prior pricing has been obtained by the college to replace the leaking

Victaulic™ piping and its mechanical seals with welded pipe, MacDonald Miller recommends first performing an engineering forensic analysis on the leaky pipe sections to narrow in on the most cost effective approach to solving this problem.

- Replace outdated, under-functioning, and failing HVAC control system. The existing campus HVAC control system is obsolete and unreliable. This would be a major project that would bring the entire campus control system up to date with a non-proprietary open source control system that would ensure future upgradability and not tie the college to one contractor for future support. The controls retrofit would provide a means for more direct and specific control of individual buildings as well as improved monitoring and troubleshooting abilities that would decrease energy usage, and increase both occupant comfort and effectiveness of facilities staff labor. It would also pave the way toward integrating the classroom scheduling system and the building HVAC scheduling system.
- Replace Airhandling Units that are at the end of their useful life. There are many airhandling units for individual campus buildings that are at or past the end of their useful lives and require replacement. Replacing these units with new units will provide energy and ongoing maintenance savings but the primary argument for replacement is age and failure.

The next level of analysis will provide more concrete numbers including engineering and financial calculations to further prove out the assertions made above. This list of findings is not comprehensive however it provides a guideline for our further analysis.

If you have questions about any of the items discussed above or would simply like to talk more indepth about any items, please let me know.

I look forward to taking the next steps with you and providing in depth calculations and analysis to provide the solutions you need for your campus.

Warmest Regards,

Gregory D. Noel
Building Energy Audit Specialist

Attachment 1

Highline Community College ECM Categorization		
ECM #	**Description**	**Savings Category**
1	Heating Water Piping Leakage Solution	3
2	Boiler Temperature Reset Schedule	1
3	AHU Economizer Repairs/Retrofit	1
4	Plumbing Fixture Replacement	1
5	Indoor Lighting Upgrades	1
6	Outdoor Lighting Upgrades	2
7	Boiler Controls and Burner Upgrades	2
8	HVAC Controls System Upgrade	3
9	AHU Replacement	3

Savings Category Defintions:

1 **Strong Energy Payback** - These projects will have a fast payback based on energy savings alone.

2 **Possible Energy Payback** - These projects do provide and energy-dollars based payback but will need to be further vetted to determine if the payback period meets the College's criteria.

3 **Capital Improvements** - These projects are end of life replacements or long term infrastructure improvements that stand on their own merit. While some energy savings can be shown from these measures, their true value cannot be measured as a direct simple payback approach.

HIGHLINE COMMUNITY COLLEGE
Campus Energy Efficiency Upgrades
Energy Services Proposal

June 29, 2012

Prepared For:
Barry Holldorf
Director of Facilities
Highline Community College
Des Moines, WA 98198-9800

Prepared By:
Building Performance Group
MacDonald-Miller Facility Solutions, Inc.
7717 Detroit Avenue SW
Seattle, WA 98106

TABLE OF CONTENTS

1.0	EXECUTIVE SUMMARY	1
2.0	ESCO SERVICES	2
3.0	ENERGY AND SAVINGS GUARANTEE POLICIES AND PROCEDURES	4
4.0	ENERGY SAVINGS SUMMARY	6
5.0	UTILITY USAGE	6
6.0	SCOPES OF WORK	7
	6.1 Campus Controls Upgrade	7
	6.2 Boiler 1&2 Controls Upgrade	9
	6.3 Exterior Lighting Upgrade	11
	6.4 Building 4 Remodel	12
7.0	PROJECT SCHEDULES	12
8.0	PROJECT ACCOUNTING	13
9.0	GENERAL CONSTRUCTION TERMS	14

APPENDICES

UTILITY HISTORY / REPORT CARD	APPENDIX I
BUDGET SUMMARY AND FEE MODEL	APPENDIX II
CALCULATIONS AND PRODUCT DATA	APPENDIX III
UTILITY INCENTIVE LETTER	APPENDIX IV

1.0 EXECUTIVE SUMMARY

MacDonald-Miller Facility Solutions, Inc. thanks you for the opportunity to prepare Energy Services Proposal for the Highline Community College Building 4 Noise Reduction Project.

Proposed measure includes the energy savings components of the Highline Community College Building 4 Noise Reduction Project. MacDonald-Miller is pleased to offer a guaranteed energy savings of 3000 therms/yr .

Guaranteed construction cost of $2,617,056 (two million six hundred seventeen thousand fifty six dollars) GMAX. For the project as specified in the specifications plan set provided by McGranahan Architects labeled: Building 4 Aircraft Noise Reduction & Modernization, State Project #11-252(A)-1 Permit Set 30 July 2012. If low bid is not under the $ 2,071,227.00 budget for construction costs, we will first negotiate in good faith with the qualified low bidder and see if they can VE the project to within budget. If negations are unsuccessful the project will be withdrawn and re-bid after going thru a VE exercise.

This proposal follows the guidelines outlined in the Energy Services Agreement in place between Washington State Department of Enterprise Services and MacDonald-Miller Facility Solutions. Services provided by MacDonald-Miller in this proposal are: investigation, design, construction and installation verification.

2.0 ESCO SERVICES

MacDonald-Miller Facility Solutions (MMFS) offers the following range of ESCO services:

Energy Analysis
MacDonald-Miller will provide the appropriate level of auditing and analysis from preliminary audits to Investment Grade Audits, as mutually agreed upon or as required for the individual project, to determine the maximum level of savings and benefit for each application.

Design Services
MacDonald-Miller will coordinate with the engineering and design services resulting in the necessary documents that will enable us to gather competitive bids, obtain all necessary permits, issue construction drawings and provide the necessary construction support to ensure a successful project.

Construction Services
MacDonald-Miller will either self perform or sub-contract as appropriate, all portions of the proposed project including all materials, supervision, labor, equipment bonds, and insurance required. Customer shall use its best efforts to assist Contractor in obtaining all necessary permits and approvals for installation of the equipment and systems as defined in the project scope.
Our preferred contracting method is to self-perform a significant amount of the overall mechanical and electrical work for the specific purpose of controlling the variables that can affect project labor, schedule, effectiveness and quality of the results. We also may have subcontractors performing portions of work scope and because of this we will implement specific processes to create an integrated execution plan for our own forces as well as our subcontractors. The selection of materials and specialty contractors are based on an Owner approved qualified list of providers.

Construction Management
MacDonald-Miller will assign a project manager responsible for ensuring coordination between the affected parties to ensure the project is on time, on budget and exceeding customer expectations.

Documentation and Training
Documentation and Training: MacDonald-Miller will provide the documentation necessary for maintenance and operation of all new systems and equipment installed per the project scope. In addition to customer orientation throughout the project life cycle, we will provide a minimum of two hours dedicated training on the operation of the new equipment.

Hazardous Waste
Should the project require, MacDonald-Miller will comply with local, state and federal hazardous disposal and recycling requirement for materials removed from existing facilities during service and retrofit work at the request of the Owner. MacDonald-Miller will not assume ownership of the material but may act on the Owner's behalf to properly remove and dispose of the material. The Owner shall pay MacDonald-Miller for the additional cost of such work. The Owner agrees and acknowledges that it has not relied on or employed MacDonald-Miller to analyze or identify the presence of any hazardous substances on the Owner's premises. The cost of hazardous material abatement and disposal is not included in this proposal.

Equipment Maintenance
Customer will perform comprehensive system maintenance and check system performance in accordance with a program of standard routines as determined by all product manufacturer's recommendations, equipment application, and industry standards.

Warranty
As with all projects, MacDonald-Miller warranties our workmanship and equipment for one year. Equipment warranties will be honored based on the manufacturers' warranty period. MacDonald-Miller will work on the Owner's behalf to ensure that extended equipment warranties are honored by the manufacturers when they extend beyond MacDonald-Miller's typical one year warranty obligation.

Utility Incentives
MacDonald-Miller with the assistance of the customer will attempt to obtain both utility incentives and grants as applicable for the scope of the proposed energy conservation project. Incentives are contingent on final approval by each granting agency and are not guaranteed.

3.0 ENERGY AND SAVINGS GUARANTEE POLICIES AND PROCEDURES

Energy and Savings Guarantee Policies and Procedures Overview

MacDonald-Miller will guarantee any portion of a project over which it has direct control. Where we do not have direct controls (such as class schedules and burn hours) we are prepared to work with the customer to devise a method of Measurement and Verification which will provide a high degree of assurance that the calculated energy savings are realized.

Performance Assurance will be specific ongoing reporting tasks that MacDonald-Miller will perform to verify that the systems are performing as specified. The intent of the verification is to measure and verify indicators on which the savings are based. Once these indicators are measured and verified to be in accordance with the proposed criteria, the savings due to the performance of the equipment or measure are deemed to be met.

MacDonald-Miller will guarantee energy consumption savings, not energy cost savings. Prevailing utility rates, adjustments based on weather conditions and changes in use corrections are used to calculate avoided costs based on the established baseline.

Remedies When Actual Savings Are Lower Than Estimates

MacDonald-Miller takes responsibility to remedy any shortfalls by correcting system performance or making a monetary payment. Any shortfall in savings will be identified by our measurement and verification program. The root cause of the shortfall will be identified and corrective action taken. If efforts are not successful and an annual energy shortfall occurs, MacDonald-Miller will pay the owner the difference.

Length of the Savings Guarantees

MacDonald-Miller understands facility uses change, occupancy fluctuates, equipment operation degrades and preventive maintenance priorities may shift over the savings lifetime for the project. As such, adjustments to the baselines must be made. One year of Guarantees and Measurement and verification services will be provided.

Refer to each individual ECM section for the specific M&V procedures to be implemented to calculate and verify energy savings

Reporting

As required by ECMs utilizing measurement of specific consumption, a reporting system ("Report Card") is used to evaluate the energy performance of the ECM. The costs and consumption of multiple utilities are tracked while observing the total cost effect of utility rate structures. This information is normalized to regional weather conditions to give a true value, which is defined as avoided energy cost, for the facilities. All utility types are converted to a common value expressed in kBtu for the purpose of understanding energy cost and usage.

Adjustments in avoided energy costs will be made based on the following variables:

- Utility rate changes.
- Annual heating and cooling degree days.
- Facility operating baseline hours.
- Changes in occupancy levels and building use.

Identified operating anomalies will be reported by the Contractor to the Customer. Any mutually agreed adjustments to the base year energy profile will be noted and incorporated into the Report Card. Adjustments are typically due to measurable changes in space utilization that result in energy use intensity variances of 2% or greater. Changes are often the result of spaces being re-purposed from office to data center, data center area changing to office, changes to major systems and pieces of equipment such as lighting upgrades and the like.

Areas of high energy intensity such as data centers, server rooms or process loads that consume 2% or greater of the respective utility's monthly usage will need to be quantified via an engineering analysis or sub-metered. If the Customer desires a US EPA Energy Star Rating (ESR) certification, any high-energy use, internet-technology (IT) spaces will require electrical sub-metering.

4.0 ENERGY SAVINGS SUMMARY

Energy Conservation Measure (ECM)	Estimated Project Cost	Estimated Electrical Savings (kWh/Yr)	Estimated Gas Savings (Therms/Yr)	Estimated Annual Savings ($ / Year)	Total Estimated Grants & Incentives ($)	Simple Payback (Years)	M&V Method
Campus Controls Upgrade							Calculated
Boiler 1 & 2 Controls Upgrade							Verify Operation
Exterior Lighting Upgrades							Calculated
Bldg 4 Construction							Modeling
Total ECMs:	**$3,340,896**	**326,478**	**17,559**	**$42,507**	**$0**	**78.60**	
PSE Utility Grant					$45,000		
POS Noise Abatement Grant					$1,765,792		
Total ECMs:	**$3,340,896**	**326,478**	**17,559**	**$42,507**	**$1,810,792**	**36.00**	

Notes:

1. Utility incentives are estimated based on current published PSE programs. All PSE incentives are subject to PSE review and incentive amounts are only finalized at the time of contract.
2. Estimated annual savings are based on the average of the last 12 months utility rates.

5.0 UTILITY USAGE

Utility	Last 12 Months Consumption	Last 12 Months Total Cost	Historical Rate (Last 12 Months)	Load Factor (Last 12 Months)	Cost Factor (Last 12 Months)
Electricity	10,047,209 kWh	$856,913	$0.085/kWh	46%	72%
Natural Gas	395,645.08 Therms	$330,373	$0.835/Therm	54%	28%
Totals	73,855,632.35 kBtu	$1,187,285	$0.016/kBtu	**100%**	**100%**

6.0 SCOPES OF WORK

6.1 Campus Controls Upgrade

SCOPE

MacDonald-Miller Facility Solutions proposes to replace the existing Andover global controllers with 12 Honeywell WEBs Global Controllers. A new PC workstation loaded with the Honeywell AX Workstation software utilizing a custom graphical interface package will be integrated to the existing Andover field controllers. This will allow increased control and visibility of the entire campus, with a scalable open protocol architecture, providing the base platform to manage a campus wide conservation program. In the future, as budgets allow, new Honeywell Spyder controllers can be installed in each building on the mechanical equipment allowing enhancement of the sequences of operations to optimize energy conservation and maximize future savings.

- Provide (3) "Tech Tools" to Facility Staff for remote support of system (Tech Tools are WiFi enabled Tablets).
- Provide & install embedded programming software, open licensing, usernames & passwords on site. These will be the property of the customer.
- After installation, commissioning and checkout are completed. We will create a database backup. Leave one copy on PC at the site and provide (2) USB drives with a copy of the database on each.
- Provide (2) 2 hour training classes. These classes will specifically cover this job and how to configure/modify trend logs, modify schedules & set points.
- Provide & install all necessary conduit, power wiring, low voltage wiring for this scope of work (reuse existing where applicable).
- Provide floor plan graphics based off of customer provided campus site plans and individual building floor plans. (Graphics are only as accurate as customer provided DWGs).
- Engineered control drawings.
- Low voltage permit.
- One year warranty

Clarifications/Exclusions:

- Customer responsible for providing Internet access & IP Address
- Customer will be responsible for providing full unrestricted access to areas of work.
- Additional equipment repairs, controls upgrades not specifically listed in scope above.
- Reprogramming/rewiring of existing unitary controllers (existing Andover, PEMs, Microzones, or Honeywell controllers, etc).
- Patching, painting and restoration are excluded from above work.
- Excludes repair of any existing conditions including components or software.

SAVINGS

We anticipate an avoided energy cost savings of approximately 1.5% of total HVAC consumption through improved building HVAC scheduling. The guaranteed savings are contingent upon HCC utilizing the new software to update all building schedules to more closely match occupied status of their classrooms and/or event scheduling. Refer to Section 4.0 Energy Savings Summary.

MEASUREMENT & VERIFICATION METHOD

While we can calculate & stipulate the expected savings, we cannot restrict usage or class schedules at the site. Measurement & Verification will be accomplished by documenting the current schedules of the campus buildings versus the new schedules available with the new system. We will print out the current occupied status schedules for the buildings and match them with the projected scheduling from the R25 software program. We will randomly check this periodically after completion to verify occupancy demands and HVAC schedules.

6.2 Boiler 1&2 Controls Upgrade

MacDonald-Miller Facility Solutions proposes replacing the aging controls system in boilers #1 & #2. The installation of this state of the art boiler control system, Autoflame Mk7 control system with Mk7 E.G.A. (exhaust gas analyzer), will result in the ability to monitor the combustion process and precisely optimize it in real-time.

Replace aging boiler control system with an Autoflame Mk7 E.G.A. control system consisting of:

The equipment is to be installed on the following boiler:

Boilers:	#1 & 2
Boiler Manufacture:	Cleaver Brooks
Fuels:	Natural Gas/#2 Fuel Oil
Emissions Permit:	No Limits
Blower Motor HP:	10 HP
Voltage:	208/3/60

Equipment:

2 ea. Mk 7 MM Evolution Module with 10.4” Full color touch screen.
2 ea. Mk 7 EGA O2, CO2 and NO Analyzer with O2 Trim
2 ea. MM60004/HSU UV scanner with High sensitivity
2 ea. MM60005 Air Pressure Sensor
2 ea. MM60006 Gas Pressure Sensor
2 ea. MM60009 Oil Pressure Sensor
1 ea. MM10006/100 Temperature Sensor
4 ea. MM10005/D Heavy duty small servos
2 ea. MM10004/D Heavy duty large servos
2 ea. Gas butterfly valve with servo mount
2 ea. Oil butterfly valve with servo mount
2 ea. Air damper switch proving switch mount
2 ea. Air damper proving switch
2 ea. 10 HP Danfoss VSD
2 ea. D.T.I. (Data Transfer Interface) with internal modem

This control system features independent burner management in compliance with the requirements of NFPA-85 and ASME CSD-1.

SAVINGS

While we can calculate and stipulate the expected savings, we cannot restrict usage or class schedules at the site. We anticipate an avoided energy savings through the improved efficiency of the internal boiler controls through precise control of the boiler combustion process and efficiencies gained with blower fan VFD's.

MEASUREMENT & VERIFICATION METHOD

The measurement & verification process will be to prove Boiler#1&2 mechanical operation after the controls installation is complete.

6.3 Exterior Lighting Upgrade

MacDonald-Miller Facility Solutions proposes to retrofit and or replace the exterior lighting fixtures throughout the campus to include parking lot and campus walkway lighting as well as building exterior lighting. While our primary goal is energy savings, this retrofit will provide additional benefits of avoided maintenance with the installation of long life luminaries. A further benefit will be achieved through standardization of fixture type resulting in a reduction of the type and quantities of inventory necessary for replacement lighting.

- Replace existing HPS and MH exterior building wall packs and canopy lighting with energy efficient LED fixtures
- Reduce maintenance costs on building lighting with installation of 50,000 hour LED fixtures
- Retrofit parking lot and walkway HPS and MH lights with energy efficient induction lamps
- Reduce maintenance costs on parking lot and walkway lighting with installation of 100,000 hour induction fixtures
- Reduce inventory cost with standardization of campus exterior lighting
- Proposed retrofits will meet or exceed code for exterior lighting requirements.

SAVINGS

Savings calculations for this measure are based on the identified: exterior building, walkway and parking lot lighting system fixture counts and wattages of their installed lamps as provided by Highline Community College facilities staff. The energy analysis phase of this IGA is based on a calculated baseline of the existing lighting load and the proposed retrofit fixtures. 4200 hours a year were used for runtime. Savings were determined by subtracting the proposed retrofit from the baseline. This is a one for one retrofit.

MEASUREMENT & VERIFICATION METHOD

The measurement and verification process of this energy conservation measure will include measuring connected load of a representative number of the retrofitted fixtures to verify installed load. We will then use the measured data in conjunction with the baseline runtimes (4200 hr/yr) to verify that the calculated savings will be achieved.

6.4 Building 4 Remodel

As part of the Highline Community College FAA noise abatement remodel of building 4, MacDonald-Miller will work with the Building architect/engineering team to insure the calculated energy savings are achieved within the specified budget for this 13,000 square foot performing arts building. Refer to appendix II.

THE PROJECT IS A RENOVATION OF BUILDING 4 IN HIGHLINE COMMUNITY COLLEGE CAMPUS TO MITIGATE AIRCRAFT NOISE AS WELL AS TO IMPROVE ITS PROGRAMMATIC SPACES. MITIGATION FOR AIRCRAFT NOISE INCLUDES ROOF REPLACEMENT WITH BETTER INSULATION AND NEW ROOF, EXTERIOR WINDOWS AND DOORS REPLACEMENT, AND EXTERIOR WALL FURRING FOR BETTER ACOUSTICAL AND THERMAL PERFORMANCE. PROGRAMMATIC IMPROVEMENTS INCLUDE NEW FINISHES, ACCESSIBLITY, ENERGY UPGRADES AND MINOR LAYOUT ADJUSTMENTS. NO MAJOR RECONFIGURATION AND FUNCTIONAL CHANGE ARE PLANNED.

7.0 PROJECT SCHEDULES

MACDONALD MILLER FACILITY SOLUTIONS **Highline Community College Preliminary Project Schedule**		
Proposed ECM Measures	**Estimated Start**	**Estimated Completion**
HVAC Controls Upgrade	**8/1/2012**	**2/1/2013**
Boiler 1&2 Controls Upgrade	**8/1/2012**	**2/1/2013**
Upgrade Exterior Lighting	**8/1/2012**	**2/1/2013**
Bldg 4 Noise Abatement Energy Services	**8/1/2012**	**9/1/2013**

8.0 PROJECT ACCOUNTING

MacDonald-Miller will provide a guaranteed maximum price (GMAX) as part of the Energy Services Proposal agreement. This price includes the inherent risks of project execution based on the defined scope of work as identified in Section 6.0. In situations where we are directed to make changes to the scope of work, the associated impacts, additive and deductive, will be discussed and resolved in an open-book manner.

This proposal is exclusive of permits, inspection fee's, testing and design services.

Items Included in the maximum project costs:

- Auditing work including preparation of this proposal
- All costs incurred performing the scope of work as listed in Section 6.0
- Cost of all equipment, materials, supplies and equipment incorporated into the work
- Transportation
- Project Management
- Minor expenses as necessary to coordinate work including mail services and communication
- Labor Burdens, Fees and OH&P
- WSST

Contingencies

Construction contingencies have been included for these projects and are specifically identified in the Budgeting Fee Sheet. MacDonald-Miller is authorized to expend the contingencies on items necessary to complete the original scope of the project pending review by the owner and Department of Enterprise Services. The intent of the contingency is for ESCO requested changes, unforeseen conditions, latent changes or owner directed changes from what was originally estimated and scoped by the ESCO.

9.0 GENERAL CONSTRUCTION TERMS

This proposal is per the terms of the Master Energy Services Agreement No.: 2011-169 H (8) dated April 19th 2011, executed on May 23, 2011 subject to the following attachments:

- Conditions of the Master Energy Services Agreement - Dated April 15, 2011
- Instructions to Bidders/General Conditions/ Supplemental Conditions For State Facility Construction - Effective Date July 1, 2010
- Energy Performance Contracting (EPC) Modifications to Instructions to Bidders/General Conditions/ Supplemental Conditions For State Facility Construction Dated April 15, 2011

1. Equipment. Contractor shall design, engineer, procure, and install the energy efficiency equipment ("Equipment") as described and specified in Section 6.0 Scopes of work. Equipment shall be installed in Customer's facilities located at the Des Moines campus 2400 S. 240th St. Des Moines, WA 98198. Upon the successful delivery and installation of the Equipment, Customer shall execute and deliver to Contractor an Equipment Acceptance Certificate ("Acceptance Certificate") in the form attached below.

2. Customer Payment Obligations. MacDonald-Miller Facility Solutions, Inc. intends to submit monthly progress invoices during the construction cycle. Progress billings will be submitted per include a "Schedule of Values" for the work covered by each billing if applicable. Final payment shall be due after completion and execution of the Acceptance Certificate by the owner.

3. Equipment Installation. Contractor shall be responsible for, and Customer shall use its best efforts to assist Contractor in, obtaining all necessary permits and approvals for installation of the Equipment. Contractor shall coordinate the installation with Customer so as to minimize any disruption of Customer's operations. Contractor will not, however, be responsible or liable for any planned or scheduled disruption to Customer's operations unless caused by the Contractor's negligence.

Customer shall not alter, move, add to, or modify the Equipment without the prior written consent of Contractor. Any material, unapproved alterations, additions, and/or modifications to the Equipment will void the Energy Savings Guarantee. Any unforeseen site conditions shall be managed via a change order to this Agreement.

Contractor shall present to Department of Enterprise Services a Notice of Substantial completion.

Section 6.0 provides a scope of work narrative for the project. Prior to beginning construction, Contractor will provide a milestone schedule for Customer's review. Contractor will provide to Customer interim construction progress reports as construction milestones are achieved.

4. Access. Customer shall provide mutually satisfactory rent-free space for the installation and operation of the Equipment in the Facilities. Contractor shall coordinate with the Customer for mutually agreeable times for the installation and repair of Equipment in the Facilities and the Customer shall provide free and full access to the Facilities to Contractor and its subcontractors and agents during normal business hours and other reasonable hours as requested to install, inspect, adjust, repair, and maintain the Equipment.

5. <u>Work Hours</u>. Work to be completed during normal business hours (M-F, 6am – 5:30pm). Other work that will affect tenants can be done during shift time (M-F beginning after 5pm and working a full 40hours each week) at a 15% labor premium upon customer approval.

EQUIPMENT ACCEPTANCE CERTIFICATE

I, the undersigned, hereby certify that:

(1) I am the duly qualified, authorized and acting on behalf of Highline Community College (the "Customer"); and, with respect to the Energy Efficiency Equipment Installation and Services Agreement (the "Agreement") dated [insert Agreement date] between MacDonald-Miller Facility Solutions ("Contractor") and the Customer;

(2) Contractor has completed the installation of the Equipment due to be installed, pursuant to the Agreement and as specified in the Scope of Work Section 6.0, and Customer has inspected and does hereby accept unconditionally the Equipment installation;

(3) based on the terms of the Agreement, Customer has paid to Contractor the full the amount owed for the Equipment and all installation costs ("Project Costs"); and

(4) with respect to all Equipment installed, the Customer has obtained from a reputable insurance company, qualified to do business in the State of Washington, the insurance coverage's as required in Section 12 of the Agreement and as evidenced by the attached certificate of insurance.

Dated _____, 2012

ACCEPTANCE

Highline Community College

BY: _____

NAME: _____

TITLE: _____

DATE: _____

APPENDIX I

Utility History/Report Card

Utility Analytics Report

Highline CC

Customer	HCC
Square Footage	573,253
Facility Usage	Education

SLIDE BAR

Apr-2012

MacDonald-Miller FACILITY SOLUTIONS

ENERGY STAR

DATA	Base Y AVG	Current	Change	Change %
DRI	0.00	0.00	0.0	0.00%
EUI-OCC	146.35	128.82	-17.5	-11.98%
EUI	146.35	128.82	-17.5	-11.98%
ESR	N/A	N/A	0.0	0.00%
Base Load	$/SQFT	$2.20	$2.10	-$0.10	-4.67%
35.3%	$/Annual	$1,262,029	$1,203,136	$58,893	-4.67%
HVAC Load	$/Energy	$0.01504	$0.01629	$0.00125	8.31%
64.7%	Degree Days		12 Mnth AVG	Decrease	0.00%
Base year period	Energy Usage WX		12 Mnth AVG	Decrease	-5.36%
Jul-08	Energy Usage OCC		12 Mnth AVG	Decrease	-11.98%
Jun-09	Energy Annualized		Overall Usage	Decrease	-11.98%

Load Factors (Monthly)		Load Factors (Annually)	
KWH-DMND	0.00%	KWH-DMND	0.00%
Electrical	49.57%	Electrical	47.76%
Gas	50.43%	Gas	52.24%
Steam	0.00%	Steam	0.00%

Actual Savings					
This Month	12 Months	Annual savings	Annual Target	Annual DELTA	Above Target
$21,135	$169,006	$58,893	$0	$58,893	0

Utility	Control Panel	Adj/factors
Rate Burdened	SQ/FT	
Aggregated	Gross	Wx & Occ

COST Energy / mBtu		
Ele $25.02	Gas $8.49	Stm $0.00
Cost Water \ Sewer CCF		
Water	Deduct	Sewer

Wx and Occ Avoided Cost		
This Month	12 Months	Contract to Date
$21,135	$97,185	$305,945

Environmental Impact (Annualized)		
CO2 Savings	3508	Metric Tons
Equates to	2338	Autos off the roads annually

Financials		
Used for tracking Energy investments		
INV	$0	Current
SPB	-	YEARS
ROI	-	Projected 5Yr
IRR	-	Projected 5Yr
NPV	-	Projected 5Yr
ROI	-	Projected 10Yr
IRR	-	Projected 10Yr
NPV	-	Projected 10Yr

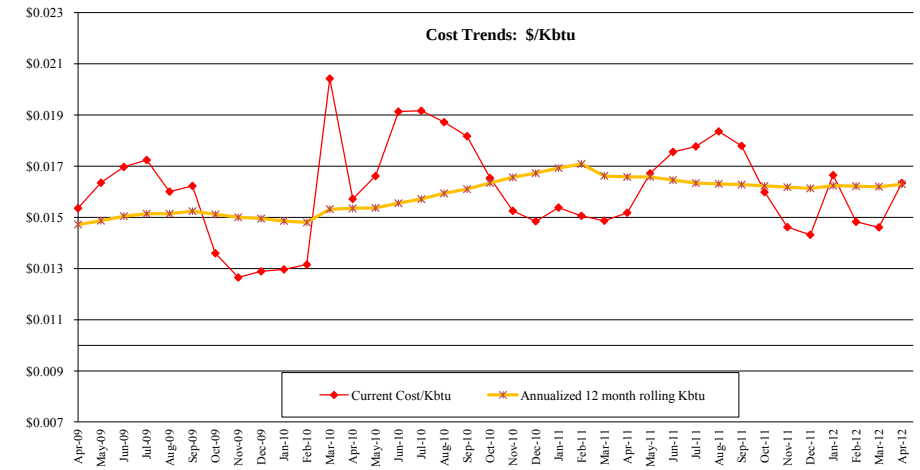

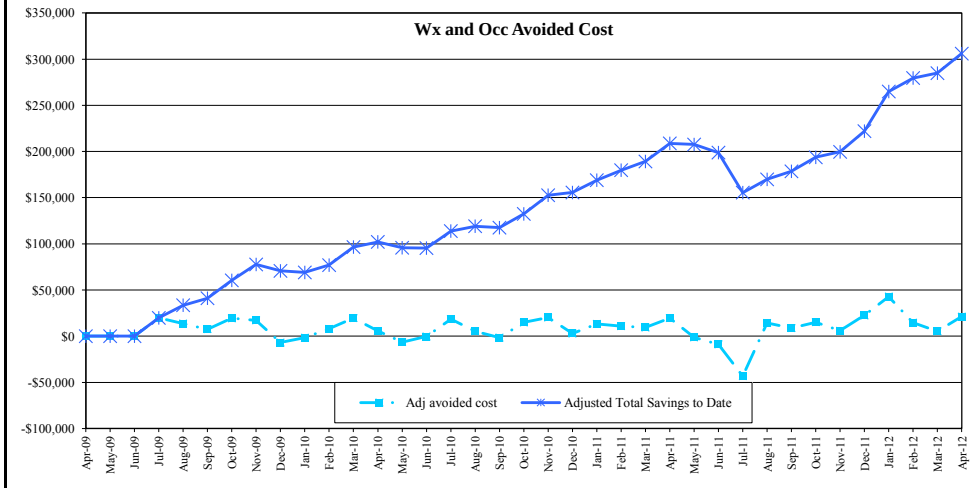

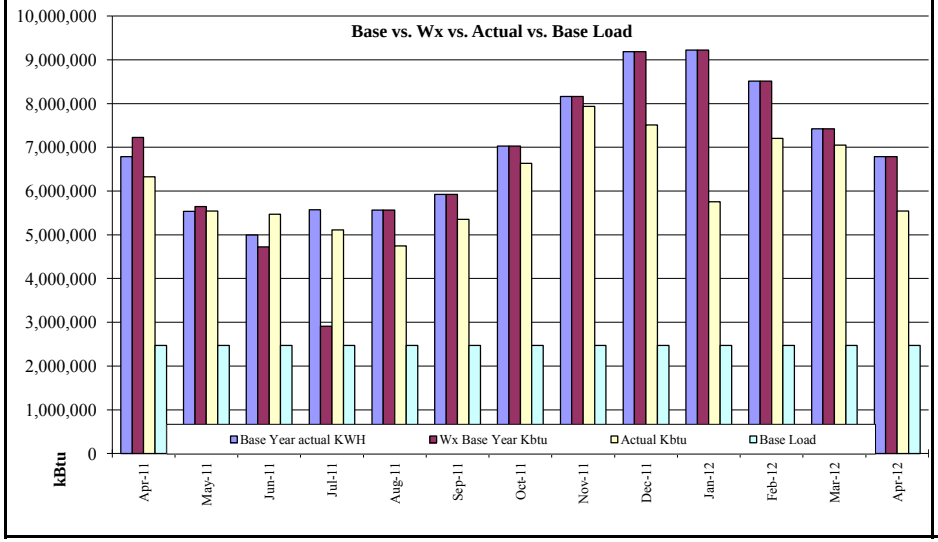

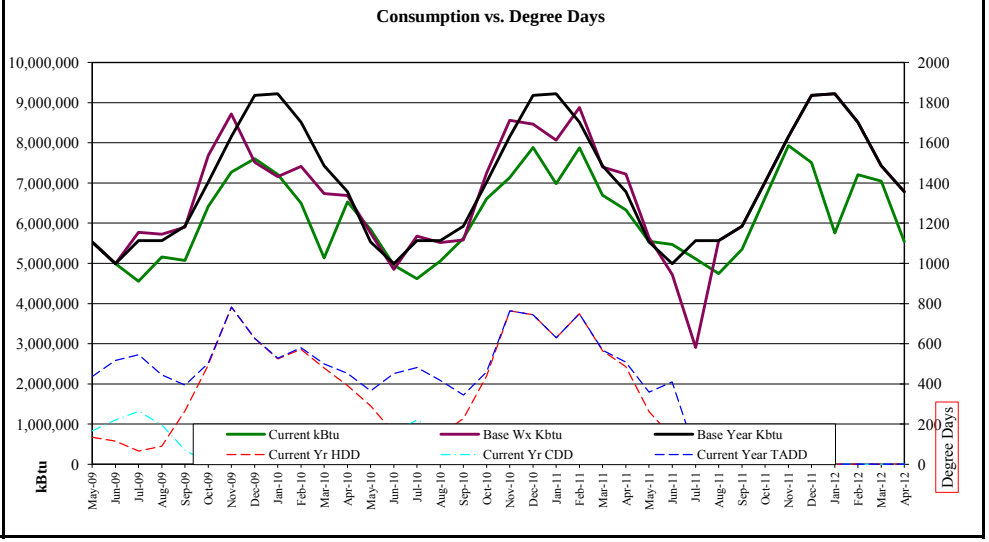

APPENDIX II

Budget Summary and Fee Model

MacDonald-Miller
FACILITY SOLUTIONS

Highline Community College
IGA Proposal Budget Break-out

Construction Costs					
ECM Description					ECM Total
ECM 1	Campus Controls Backbone		#	$	213,519.00
ECM 2	Boiler 1&2 Upgrade Controls			$	170,000.00
ECM 3	Exterior Lighting			$	245,328.00
ECM 4	Building 4			$	1,900,000.00
A 1 Subtotal			#	$	2,528,847.00
1	General Conditions	$ -	LS	$	-
2	Start-up/Commissioning	$ -	LS	$	7,500.00
3	Site Supervision	$ -	LS	$	-
A 2 Subtotal			#	$	2,536,347.00
1	Construction Bonds			$	37,178.00
Total Construction Costs (A2+Bond)				$	2,573,525.00
Professional Services					
1	Audit Fee		LS	$	51,800.00
2	Mechanical Design and Engineering	0%			
	Construction Management/Administration %				
3	Construction Management/Administration			$	70,542.85
Total Professional Services				$	122,342.85
Other Costs					
	Project Contingency %				
1	Project Contingency			$	121,717.35
2	Performance Validation (M&V)	$ -		$	7,000.00
3	Commissioning	0%		$	-
Total Other Costs				$	128,717.35
Overhead & Profit					
1	Overhead and Profit Percentage			$	170,417.46
Total Overhead & Profit				$	170,417.46
Total Guaranteed Fixed Costs				$	2,995,002.66
Non Guaranteed Fees & Taxes					
1	Sales Tax			$	280,993.36
2	Interagency Fee - We State GA	Estimate		$	64,900.00
Total Non Guaranteed Fees & Taxes					$345,893.36
Total Maximum Project Cost					$3,340,896.01

APPENDIX III

Calculations and Product Data

ECM 1 - Campus Controls Upgrade

MacDonald–Miller Facility Solutions

SEATTLE, WASHINGTON

HIGHLINE COMMUNITY COLLEGE

HONEYWELL WEBS UPGRADE

DESMOINES, WASHINGTON 98198

DRAWING INDEX

MC–01 TITLE AND INDEX
MC–02 HONEYWELL WEBS UPGRADE MAP
MC–03 BILL OF MATERIALS AND INTEGRATION MATRIX

MacDonald-Miller
FACILITY SOLUTIONS
7717 Detroit Avenue SW
Seattle, WA 98106
Phone: 206-763-9400
Fax: 206-767-6773
www.macmiller.com
WA Lic No: MACDOFS980RU

REVISIONS: DATE

HIGHLINE COMMUNITY COLLEGE WEBS UPGRADE

DESMOINES, WA 98198

TITLE AND INDEX

ENGINEER: DAVID GEHMAN
LAST REVISED: 6/22/12
CHECKED BY: BILL HEATH
DATE PLOTTED:
CAD: DAVID GEHMAN
ISSUE DATE:

DRAWING NUMBER: A–0974–7629083

NOT ISSUED FOR CONSTRUCTION

SHEET NUMBER: MC–01

CAD FILENAME: 7629083MC01

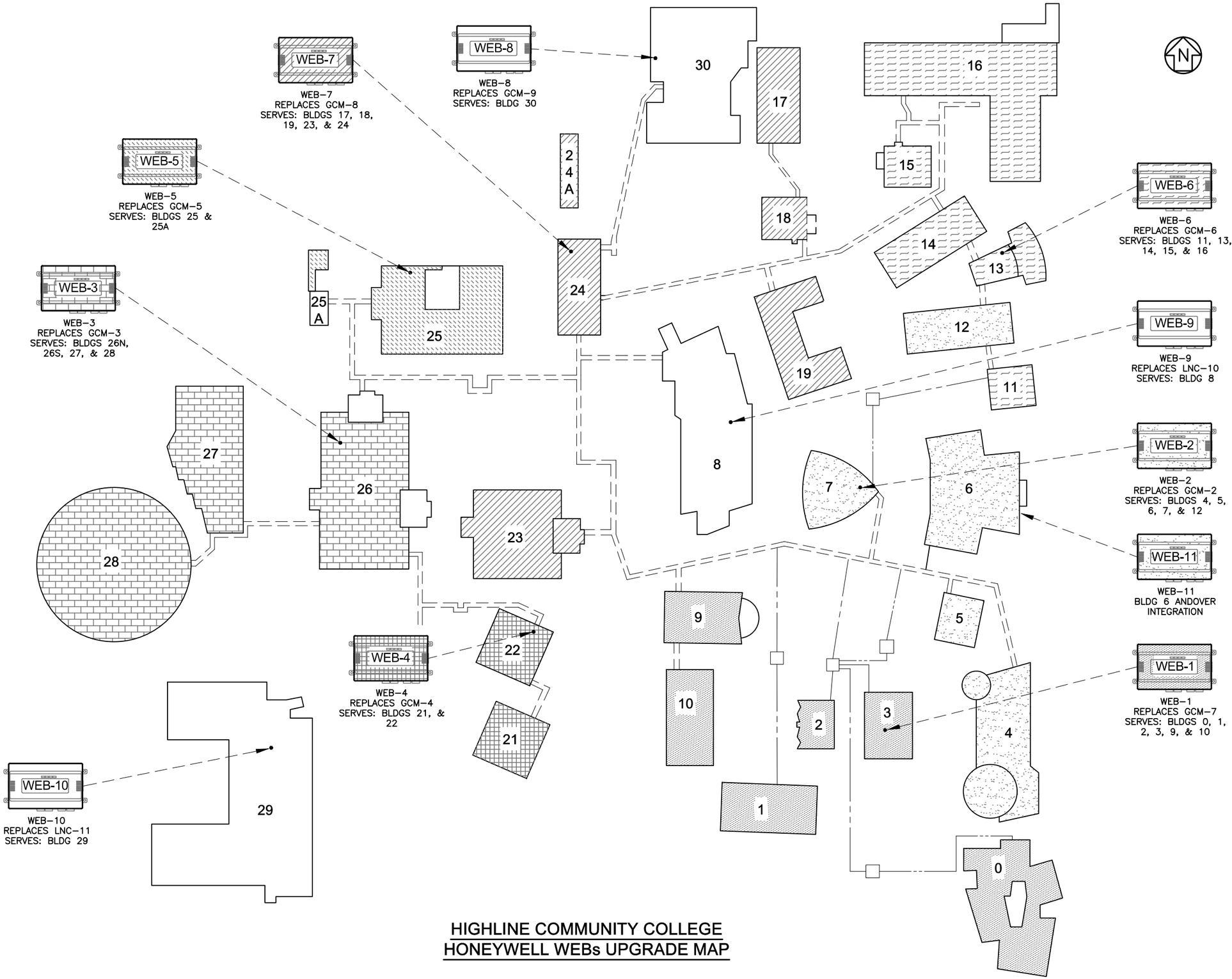

HIGHLINE COMMUNITY COLLEGE
HONEYWELL WEBs UPGRADE MAP

MacDonald-Miller
FACILITY SOLUTIONS
7717 Detroit Avenue SW
Seattle, WA 98106
Phone: 206-763-9400
Fax: 206-767-6773
www.macmiller.com
WA Lic No: MACDOFS980RU

REVISIONS: DATE

HIGHLINE COMMUNITY COLLEGE WEBS UPGRADE

DESMOINES, WA 98198

HONEYWELL WEBS UPGRADE MAP

ENGINEER: DAVID GEHMAN	LAST REVISED: 6/22/12
CHECKED BY: BILL HEATH	DATE PLOTTED: ----
CAD: DAVID GEHMAN	ISSUE DATE: ------

DRAWING NUMBER: A-0974-7629083

NOT ISSUED FOR CONSTRUCTION

SHEET NUMBER: MC-02

CAD FILENAME: J:\762\9083 HCC - CAMPUS CONTROLS UPGRADE IGA MC\00\BPG\CTRL\DWG\7629083MC01.DWG

Plotted: 6/22/2012 7:50:15 AM

TYPICAL HONEYWELL WEB CONTROLLER BILL OF MATERIALS

QTY	MFR	MODEL	DESCRIPTION
1	HONEYWELL	WEB-600-O	WEB 600 CONTROLLER WITH OPEN LICENSE
1	HONEYWELL	WEB-AX-EMB	EMBEDDED WORKBENCH TOOL
1	HONEYWELL	NPM-256MB	WEB-600 MEMORY EXPANSION LICENSE FROM 128 TO 256MB
1	HONEYWELL	NPB-WPM-US	120 VAC WALL OUTLET PLUG IN POWER SUPPLY
FOR ASD INTEGRATION ADD THE FOLLOWING DRIVER			
1		DR-IS-ASD-AX-J6	NETWORK 8000 ASD DRIVER
FOR LONWORKS INTEGRATION ADD THE FOLLOWING DRIVER			
1	HONEYWELL	DR-LONFT10-AX	LON DRIVER AND COMM CARD
FOR ANDOVER INTEGRATION ADD THE FOLLOWING DRIVER			
1		DR-ANDOVER	ANDOVER DRIVER

WEB UPGRADE INTEGRATION MATRIX

		WEB-1		WEB-2		WEB-3			WEB-4		WEB-5			WEB-6		WEB-7		WEB-8			WEB-9			WEB-10			WEB-11
BLDG	DESCRIPTION	ASD		ASD		ASD			ASD		ASD			ASD		ASD		ASD			ASD		LON	ASD		LON	ANDOVER
		MZ2	PEM	MZ2	PEM	MF2	MZ2	PEM	MZ2	PEM	MN-ASDI MNFLOW	MZ2	PEM	MZ2	PEM	MZ2	PEM	MN-ASDI MNFLOW	MZ2	PEM	MZ2	PEM	MNL-VAV	MZ2	PEM	MNL-VAV	WSHP
BLDG 0	EARLY CHILDHOOD DEVELOPMENT	5	11																								
BLDG 1	ADMINISTRATION	1	0																								
BLDG 2	ART STUDIO	0	1																								
BLDG 3	CRAFTS	1	3																								
BLDG 4	PERFORMING ARTS																										
BLDG 5	FACULTY			1	0																						
BDLG 6	STUDENT SERVICES			2	0																						25
BLDG 7	ARTIST LECTURE CENTER			1	0																						
BLDG 8	STUDENT CENTER																				10	0	25				
BLDG 9	INSTITUTIONAL INSTRUCTION	1	0																								
BLDG 10	CLASSROOMS	0	16																								
BLDG 11	FACULTY																										
BLDG 12	CLASSROOMS			4	0																						
BLDG 13	CLASSROOMS													2	4												
BLDG 14	SCIENCE LAB													1	0												
BLDG 15	FACULTY																										
BLDG 16	LABORATORY													8	0												
BLDG 17	CLASSROOMS															0	14										
BLDG 18	FACULTY															1	0										
BLDG 19	CLASSROOMS																										
BLDG 21	CLASSROOMS								14	0																	
BLDG 22	CLASSROOMS								2	13																	
BLDG 23	CLASSROOMS															1	1										
BLDG 24	PHYSICAL PLANT															1	0										
BLDG 25	LIBRARY										3	3	1														
BLDG 25A	CHILLER PLANT											2	0														
BLDG 26	CLASSROOMS					2	4	6																			
BLDG 27	LOCKER ROOMS					0	1	0																			
BLDG 28	PAVILLION					0	1	0																			
BLDG 29	HIGHER EDUCATION BUILDING																							19	3	76	
BLDG 30	CLASSROOMS																	25	6	2							
TOTAL NUMBER OF DEVICES PER JACE		8	31	8	0	2	6	6	16	13	3	5	1	11	4	3	15	25	6	2	10	0	25	19	3	76	25
DEVICE TYPE		MZ2	PEM	MZ2	PEM	MF2	MZ2	PEM	MZ2	PEM	MN-ASDI MNFLOW	MZ2	PEM	MZ2	PEM	MZ2	PEM	MN-ASDI MNFLOW	MZ2	PEM	MZ2	PEM	MNL-VAV	MZ2	PEM	MNL-VAV	WSHP
JACE (WEB) CONTROLLER		WEB-1		WEB-2		WEB-3			WEB-4		WEB-5			WEB-6		WEB-7		WEB-8			WEB-9			WEB-10			WEB-11

MacDonald-Miller
FACILITY SOLUTIONS
7717 Detroit Avenue SW
Seattle, WA 98106
Phone: 206-763-9400
Fax: 206-767-6773
www.macmiller.com
WA Lic No: MACDOFS980RU

REVISIONS: DATE

HONEYWELL COMMUNITY COLLEGE WEBS UPGRADE

DESMOINES, WA 98198

BILL OF MATERIALS AND INTEGRATION MATRIX

ENGINEER: DAVID GEHMAN
LAST REVISED: 6/22/12
CHECKED BY: BILL HEATH
DATE PLOTTED: ----
CAD: DAVID GEHMAN
ISSUE DATE: ------

DRAWING NUMBER: A-0974-7629083

NOT ISSUED FOR CONSTRUCTION

SHEET NUMBER: MC-03

CAD FILENAME: J:\762\9083 HCC - CAMPUS CONTROLS UPGRADE IGA MC\00\BPG\CTRL\DWG\7629083MC01.DWG

Plotted: 6/22/2012 7:50:21 AM

Honeywell

WEB-600

MODELS: WEB-600, WEB-600-O, WEB-600-US, WEB-600-O-US

SPECIFICATION DATA

GENERAL

The WEB-600 is a compact, embedded controller/server platform. It combines integrated control, supervision, data logging, alarming, scheduling and network management functions with Internet connectivity and web serving capabilities in a small, compact platform. The WEB-600 makes it possible to control and manage external devices over the Internet and present real time information to users in web-based graphical views.

The WEB-600 is a member of the WEBs-AX™ suite of Java®-based controller/server products, software applications and tools, which are designed to integrate a variety of devices and protocols into unified, distributed systems. WEBs-AX™ products are powered by the revolutionary Niagara^{AX} Framework®, the industry's first software technology designed to integrate diverse systems and devices into a seamless system. Niagara^{AX} supports a wide range of protocols including LonWorks®, BACnet®, Modbus®, and Internet standards. The Niagara^{AX} Framework® also includes integrated network management tools to support the design, configuration, installation and maintenance of interoperable networks.

FEATURES

- **Supports open and legacy protocols.**
- **Web User Interface (standard) serves rich presentation and live data to a browser.**
- **Run stand-alone control, energy management, and multi-protocol integration.**
- **Standard and optional communications boards.**
- **Can be expanded with optional 16 and 34 point I/O Modules.**
- **Small compact design is easy to install and supports multiple power options.**
- **Embedded IBM® Power PC Platform.**

APPLICATION

The WEB-600 is ideal for smaller facilities, remote sites, and for distributing control and monitoring throughout large facilities. Optional I/O modules can be plugged in for applications where local control is required. The WEB-600 controller also supports a wide range of field busses for connection to remote I/O and stand-alone controllers. In small facility applications, the WEB-600 controller is all you need for a complete system.

The WEB-600 controller serves data and rich graphical displays to a standard web browser via an Ethernet LAN or remotely over the Internet, or dial-up modem. In larger facilities, multi-building applications and large-scale control system integrations, WEBStation-AX™ software can be used to aggregate information (real-time data, history, alarms, etc.) from large numbers of WEBs-AX™ controllers into a single unified application. The WEBStation-AX™ Supervisor can manage global control functions, support data passing over multiple networks, connect to enterprise level softwa

74-4067-02

applications, and host multiple, simultaneous client workstations connected over the local network, the Internet, or dial-up modem.

Table 1.

Part Number	Description
WEB-600	Based unit including two Ethernet ports, one RS-232 port, one RS-485 port, one USB port, Web User Interface, Niagara^{AX} Connectivity, and oBix™ driver included.
WEB-600-O	WEB-600 with open license (NiCS has accept.wb.in="*")
WEB-600-US	WEB-600 controller manufactured in the USA.
WEB-600-O-US	WEB-600 controller with open license manufactured in the USA.

SPECIFICATIONS

Model: WEB-600 Controller: Base Unit including two Ethernet ports, one RS-232 port, one RS-485 port, one USB port, Web User Interface, Niagara^{AX} Connectivity, and oBix driver.

Platform: IBM® PowerPC® 440 524 MHz processor.
128 MB DDR RAM & 128 MB Serial Flash. Optional 256 MB DDR RAM.
Battery Backup - 5 minutes typical - shutdown begins within 10 seconds.
Real-time clock - 3 month backup maximum via battery.

Communications: 2 Ethernet Ports - 10/100 Mbps (RJ-45 Connectors).
1 RS-232 Port (9 pin D-shell connector).
1 RS-485 non isolated port (3 Screw Connector on base board).

256 MB Memory Upgrade Option: Memory upgrade option (NPM-256) increases memory to 256 MB DDR.

Operating System: QNX® RTOS, IBM J9™ JVM® Java Virtual Machine, Niagara^{AX} 3.1 or later.

Chassis: Construction: Plastic, din rail or screw mount chassis, plastic cover.
Cooling: Internal air convection.
Dimensions: 6.3 in. (160 mm) W x 4.8 in. (122 mm) H (including connectors) x 2.4 in. (61 mm) D.

Temperature Ratings: Operating temperature range: 32° to 122° F (0° to 50° C).
Storage Temperature range: 32° to 158° F (0° to 70° C).

Humidity Rating: 5% to 95% RH, non-condensing.

Approvals: RoHS, BTL (with optional BACnet driver), UL 916, C-UL listed to Canadian Standards Association (CSA) C22.2 No. 205-M1983 "Signal Equipment", CE, FCC part 15 Class A, C-tick (Australia).

Optional Communications Cards: Manufactured in the US

Table 2.

Part Number	Description
DR-LONFT10-AX	Optional 78 Kbps FTT10 A LON® Adapter and LonWorks communication driver. (card and driver bundle).
NBP-LON	Optional 78 kbps FTT10 LON adapter (card only).
NPB-RS232	Optional RS-232 port adapter with 9 pin D-shell connector.
NPB-2X-RS485	Optional dual port RS-485 adapter, electrically isolated.
NPB-MDM	Optional Auto-dial / Auto-answer 56 KBPS modem; consumes one option card slot; cannot be used if NPB-GPRS-H modem is selected.
NPB-GPRS-H	Optional GPRS Modem communications card with SIM card for connection via Wyless network; Wyless is the only approved service provider for the continental US, consumes one option card slot.

Power Supply Options:

Table 3.

Part Number	Description
NPB-PWR-H	Optional: 24 Vac/dc power supply module, Din Rail mounted. Manufactured in the US.
NPB-PWR-UN-H	Optional universal voltage input power supply module, Din Rail mounted. Input voltage is 90 - 263 Volts AC, 50/60 Hz, auto adjusting.
NPB-WPM-US	Optional Wall Power Module. Input 120 Vac, 50-60 Hz. US wall plug power supply.

Optional I/O Modules: Table 4 lists the I/O models that can be connected to the WEB-600. Optionally, IO-16-REM-H can be connected; details can be found in the data sheet 74-5082.

Table 4.

Feature	IO-16 WEB-IO-16	IO-16-US	IO-34 WEB-IO-34	IO-34-US
Manufactured in	China	USA	China	USA
Universal Inputs	8		16	
Relay Outputs	4		10	
Analog Outputs	4		8	
Dimensions (in inches)	3.2W x 4.8H x 2.4D		6.3W x 4.8H x 2.4D	
Dimensions (in mm)	82W x 122H x 61D		160W x 122H x 61D	
Max per WEB-600 controller	4 / 2*		1	

*4 or 2 in combination with IO-34/IO-34-US.

I/O Specifications - All Modules: Connection to WEB-600 Controller is via a single multi-pin plug.

Removable screw terminals (0.2 in. [5.08 mm] centers) for all inputs and outputs.

Universal Input types supported:

- Type 3 (10K) Thermistors; Thermistor Sensor Range -10° to +240° F (23° to +116° C). Input accuracy is in the range of +/-1% of span. Others may be supported by entering custom non-linear curve interpolation points for each unique non-linear input.
- 0 to 10 volt; accuracy is +/- 2% of span, without user calibration; uses an external resistor for current input (four provided, mounted by installer on terminal connections) 4/20 mA current loop; accuracy is +/- 2% of span, without user calibration; self-powered or board-powered sensors accepted.
- Dry contact; V open circuit, 300-uA short-circuit current.
- Pulsing dry contact at a rate of up to 20 Hz; 50% duty cycle.

Digital Outputs (4 ea.) Pilot Duty.

- Form A relay contacts suitable for on/off control only; floating control not supported.
- Maximum voltage - 30V DC or AC.
- 1/2 Amp maximum current rating.

Analog Outputs:

- 0 -10 Volt DC.
- Minimum load supported per output is 2500 ohms minimum or 4 mA drain maximum.

WEBs–AX™ System Integration

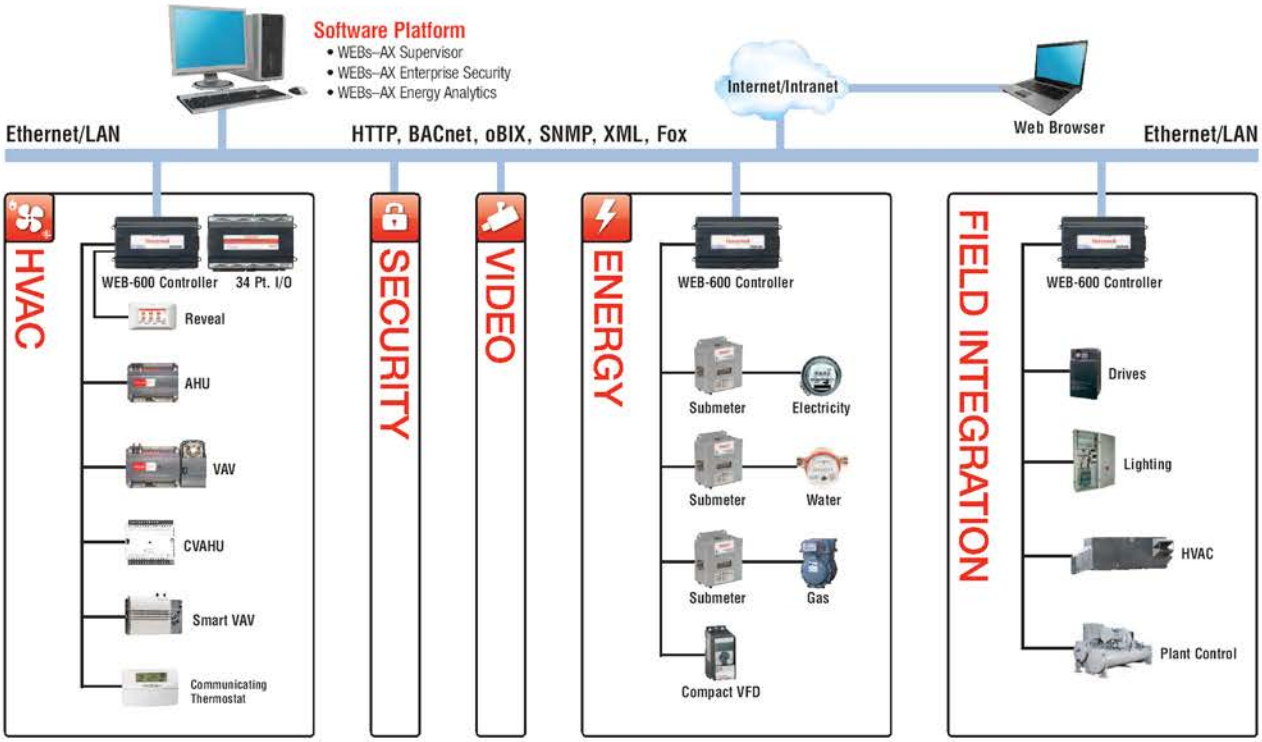

Powered by niagara AX FRAMEWORK

WEB-600ARCH PR
November 2010

BACnet® is a registered trademark of the American Society of Heating, Refrigerating, and Air-Conditioning Engineers, Inc. (ASHRAE).

IBM® and PowerPC® are registered trademarks and J9™ is a trademark of International Business Machines Corporation.

JVM® and JAVA® are registered trademark of Sun Microsystems, Inc.

LON® and LONWORKS® are registered trademarks of Echelon Corporation.

Modbus® is a registered trademark of Schneider Automation, Inc.

Niagara^{AX}™ and the Niagara logo are trademarks and Niagara Framework® is a registered trademark of Tridium, Inc.

oBix™ is a trademark of Clinical Computer Systems, Inc.

QNX® is a registered trademark of QNX Software Systems, Ltd.

Tradeline™, WEBs-AX™ *and WEBStation-AX™ are trademarks of Honeywell International, Inc.*

Automation and Control Solutions
Honeywell International Inc.
1985 Douglas Drive North
Golden Valley, MN 55422

Honeywell Limited-Honeywell Limitée
35 Dynamic Drive
Toronto, Ontario M1V 4Z9
customer.honeywell.com

Honeywell

® U.S. Registered Trademark
© 2010 Honeywell International Inc.
74-4067—02 T.D. Rev. 11-10
Printed in U.S.A.

ECM 2 - Boiler 1&2 Controls Upgrade

Autoflame

World Leaders in
Combustion Management
Solutions

AUTOFLAME®

Combustion Management Systems

Mk7 Burner Management System Application Schematic

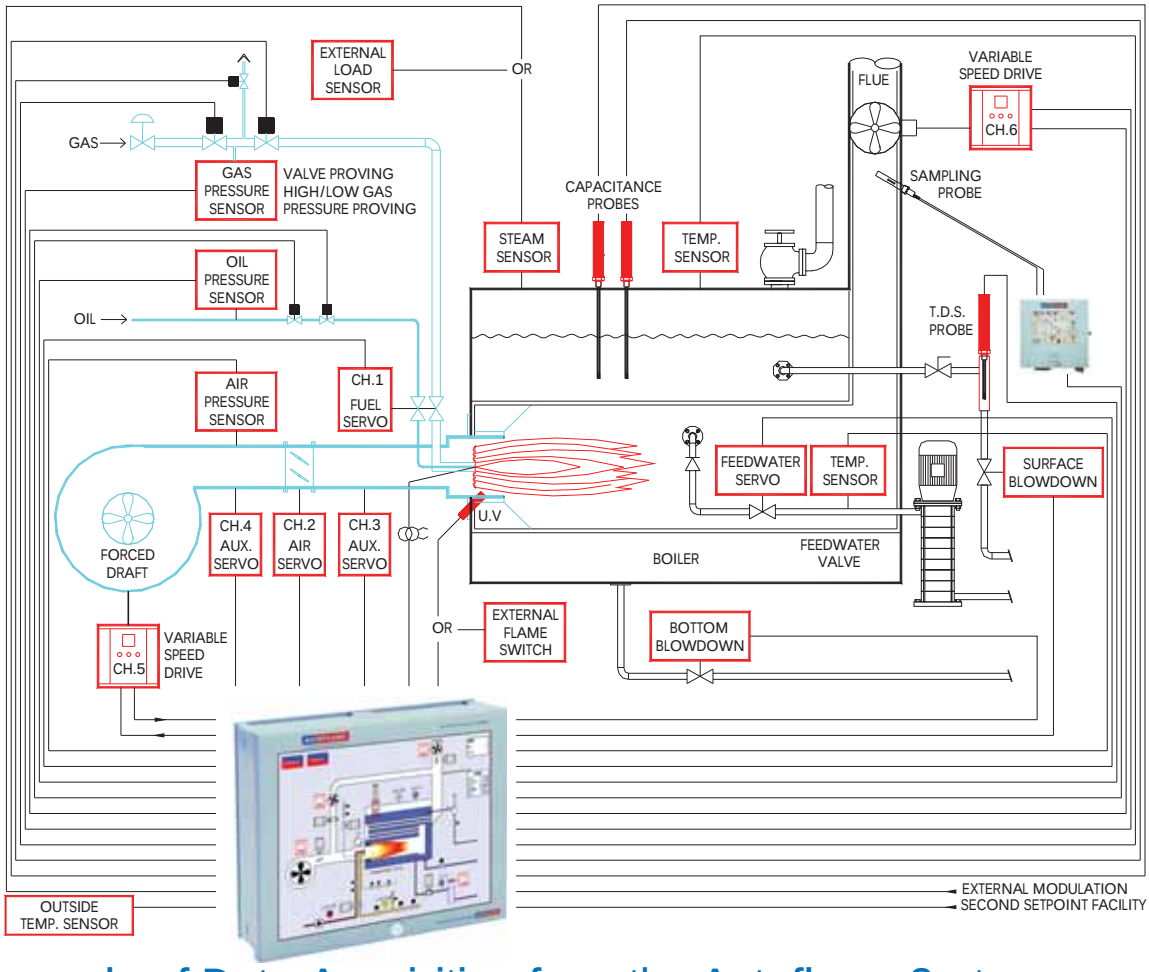

Example of Data Acquisition from the Autoflame System

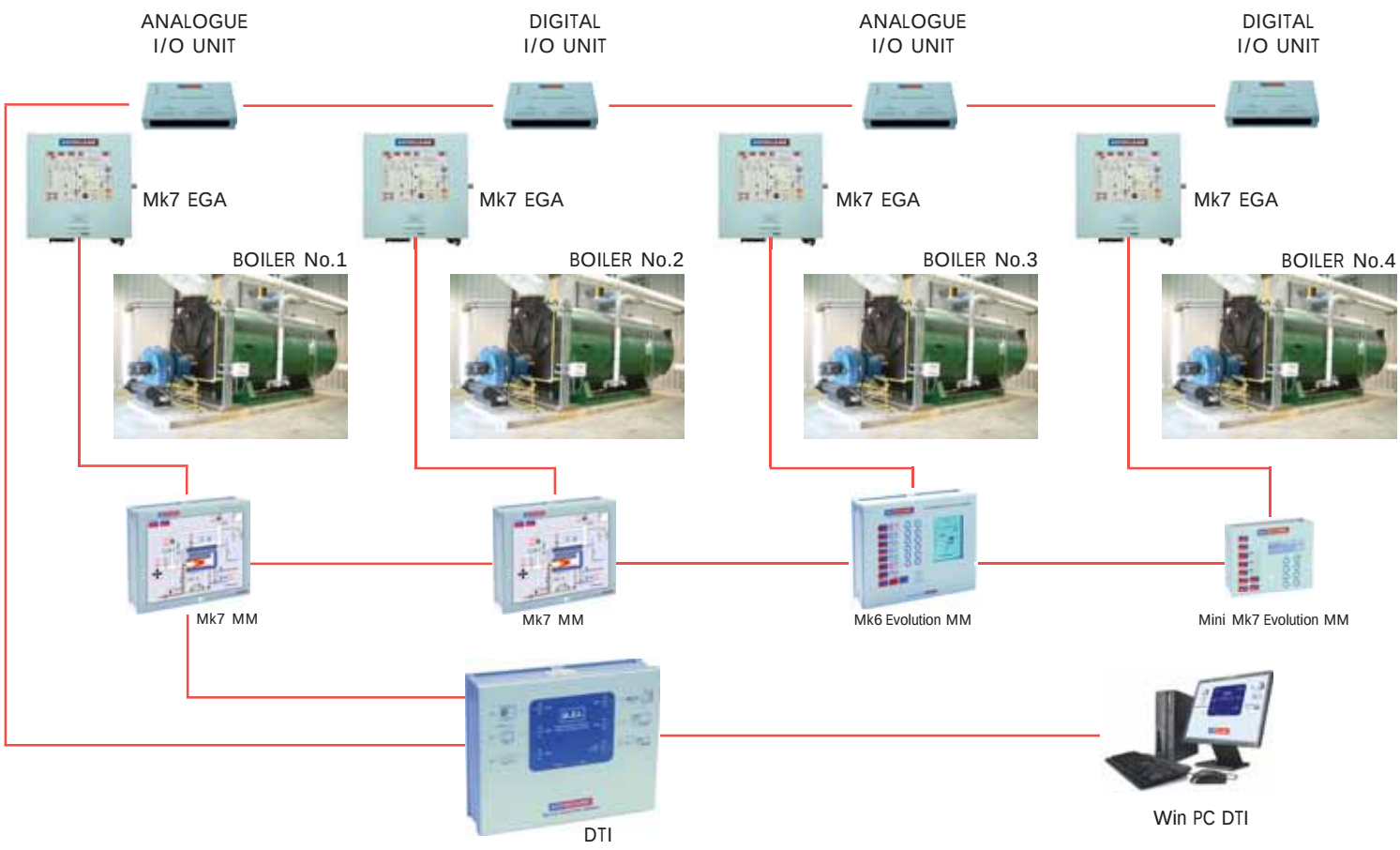

Micro Modulation

To maximise the efficiency of any boiler two requirements are of paramount importance.

First, the air to fuel ratio should be kept to a minimum that ensures complete combustion within the limitations of the combustion head design. Once these settings are arrived at they should be infinitely repeatable to an incredibly high degree of accuracy.

The second target is the temperature or pressure of the boiler, monitored by the combustion system. At all times, the exact amount of fuel and air are fired to achieve the target value and at no time, irrespective of load change, is this target exceeded or fallen short of.

Mechanical systems that have traditionally involved cams and linkages to characterise the fuel/air ratio have made this accuracy impossible. At most times, the accuracy of the fuel input response to the monitored temperature/pressure has meant that the target value set by the operator has been significantly exceeded or fallen short of. Autoflame Engineering were the first in the World to develop a system that overcomes all of these problems by utilising the latest microprocessor technology.

The Micro Modulation system provides an easily programmable and flexible means of optimising combustion quality throughout the load requirement range of the boiler/burner, whilst ensuring that temperature is accurate to within 1°C/2°F and pressure to within 1.5psi/0.1 bar. The maximum error in degrees angular rotation between the servomotors at any position in the load range is 0.1°.

At the heart of the system is the control module containing the microprocessor and power supply. The display panel features touch sensitive keypad data entry, VGA/LCD display and LED status indicators. The MM system displays the positioning data for up to six individually controlled channels. The status function will display the "required" & "actual" set point, burner firing rate (%) and the selected fuel. The MM can be calibrated to display instantaneous and totalled fuel flow measurements.

A voltage dividing system monitors each channel's position, enabling digitised position information to be encoded into the control module's memory. The relative positioning of each channel is constantly checked by the system at the rate of 50 times per second. The Autoflame burner control system achieves "locked on" near stoichiometric air fuel mixing throughout the fuel input range of the boiler while maintaining exact temperature or pressure target values. The load control incorporates full user variable P.I.D. control.

Intelligent Boiler Sequencing (IBS)

Included as standard within every MM/EGA module is the IBS capability. This control form ensures the minimum number of boiler/burner units are in operation at any one time to satisfy the heat requirement imposed upon the boiler plant. Dedicated software exists within each module for steam and heating boiler sequencing. (Lead/Lag Control).

Exhaust Gas Analyser

The EGA trim system further expands the MM. It measures and displays O_2, CO_2, CO, NO, SO_2, exhaust temperature and boiler efficiency.

This data is fed back to the MM which inflicts minute corrections on the air damper position. This ensures that the originally entered commissioning data is adhered to irrespective of variations in stack pressure, barometric conditions or changes in fuel temperature and quality.

The trim function is achieved by every paired value of air and fuel having stored values for O_2, CO_2 and CO. Additional values for each of these gases are stored for "fuel rich" and "air rich" at a known deviation angle from the commissioned value. This data is processed and expressed as an angular correction value. In this way an exact amount of air damper trim may be inflicted at any time to return the system to its commissioned value for any load condition. The diagram on the right gives further explanation and outlines an example.

Each EGA module can be connected to an energy management system to track and record the information that is generated by the EGA system.

To expand the MM system to the EGA specification, the additional sampling unit and exhaust gas sampling probe is required. The MM/EGA control form uses P+I+D to feed forward and interpolate between all entered data. It also carries error checking self-diagnostic software for self-identification of system component or data handling failure. The EGA can be used as a stand alone on-line exhaust gas analyser.

Data Transfer Interface

The DTI is a data acquisition system that can collect operational data from up to 10 MM modules on one site. This data can be transmitted via an RS232/422 link to a local computer or a building management system using the Modbus or Metasys protocol.

Autoflame's WinPCDTI software brings control of the Combustion Management System to a PC, providing on/off control as well as temperature and pressure set point adjustment of the burners. The PC can be local at the site or connected remotely by modem. Alarm conditions can be defined and, if triggered, the software can advise of the condition via a pager.

M.M./E.G.A. Efficiency

In today's climate we find ourselves under increasing pressure to burn fossil fuels more efficiently but at the same time keep within ever decreasing limits.

The MM system, with the majority of burners, is able to achieve and maintain 82% combustion efficiency on natural gas firing and 86% when firing on 35 seconds/#2 oil. If used in conjunction with the Exhaust Gas Analyser trim system it is possible to maintain commissioned values of combustion irrespective of changes of stack pressure, variations in fuel calorific value or barometric conditions.

Graphical Explanation of the Patented EGA 3 Parameter Trim System.

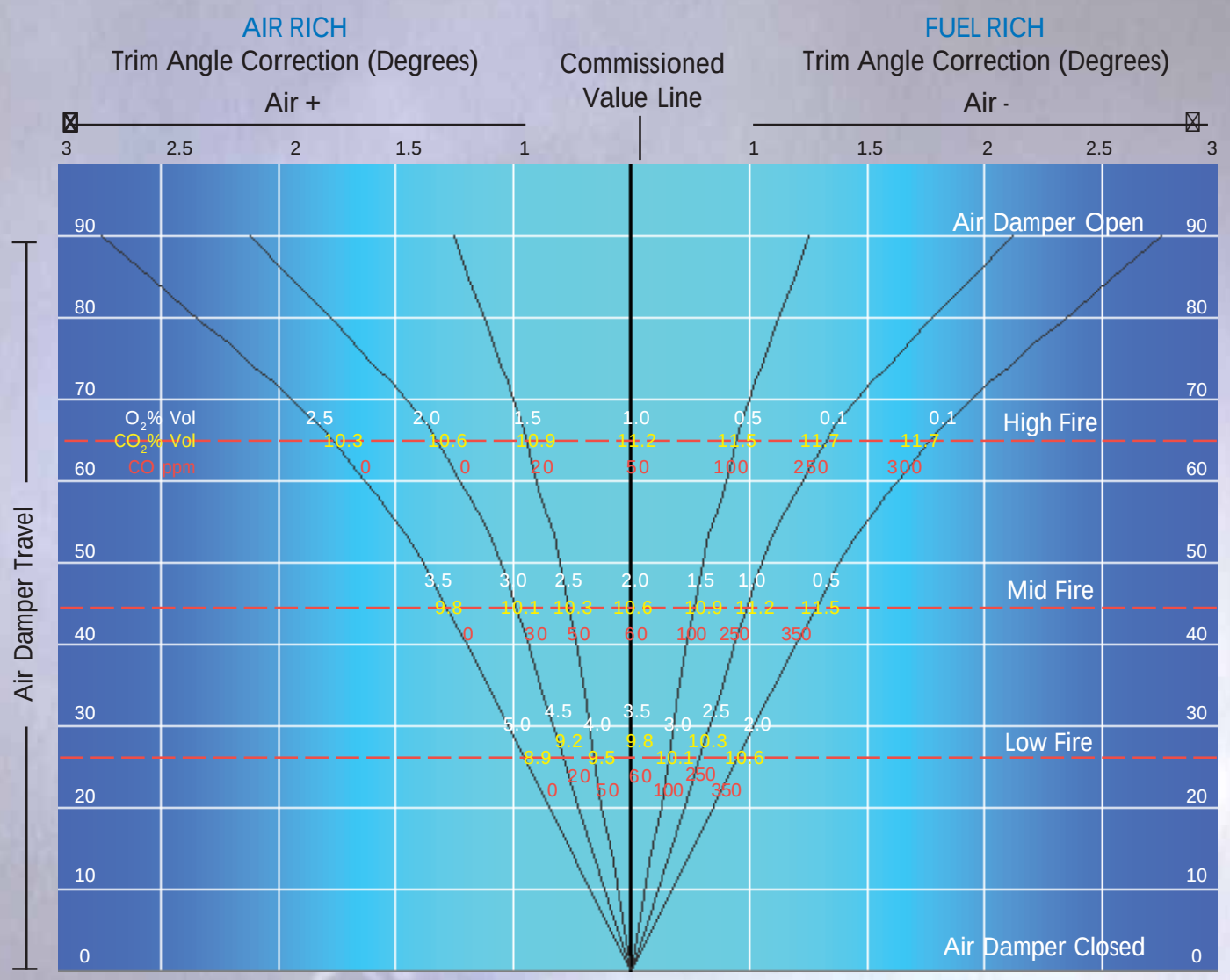

The above example shows the map of exhaust gas analysis values memorised during the commissioning process. The central vertical line represents the commissioned value. For each paired value of fuel and air positions, the unit also memorises values for O_2, CO_2 & CO.

For example, at high fire above, 65 degrees angular on the air damper, commissioned values for exhaust gases are: CO_2 = 11.2%, O_2 = 1 %, CO = 50 ppm.

At each entered commissioned position the MM adds air & fuel at a pre-calculated angular deviation from the commissioned value.

The values to the right of the commissioned value line represent fuel rich combustion at it's pre-calculated angular deviation. Using the same high fire example, the fuel rich combustion values for exhaust gases are: CO_2 = 11.7 %, O_2 = 0.1 %, CO = 300 ppm.

The values left of the commissioned value line represent air rich combustion at its pre-calculated angular deviation, both fuel rich and air rich are at the same relative angular deviation.

At the same high fire example, air rich combustion values for exhaust gases are: CO_2 = 10.3 %, O_2 = 2.5 %, CO = 0 ppm.

This cycle is then repeated for each entered position, minimum 5, maximum 17. When commissioning is complete the MM has memorised not only the commissioned values of fuel / air ratio but also a complete map of the burner's combustion performance either side of the commissioned value line of data relative to the pre-calculated deviation from the commissioned value.

By this method the burner system knows how much trim is necessary to bring the burner back to it's commissioned value and from which side of the commissioned value line the trim adjustment must be made.

Autoflame Engineering

Autoflame Engineering Limited was founded in 1972 by Brendan Kemp specialising in total boilerhouse solutions - designing, manufacturing, installing and servicing boiler houses encompassing commercial, industrial and process applications.

In the late 1970s, Autoflame anticipated the requirement for more precise control over the boiler combustion process as an alternative to the conventional cam and linkage form. The microprocessor was the precise tool and development proceeded. Since 1984, Autoflame has been manufacturing and marketing the Micro Modulation Combustion Management System with the Exhaust Gas Analyser.

Patented MM/EGA Trim
No.'s 02169726 & 00195866

During commissioning, for every paired value of fuel and air, corresponding values of O_2, CO_2 & CO are stored. These are known as the commissioned values. The System then performs an 'autotrim' cycle, where 10% of the open damper area, based on a rectangular duct, is added and subtracted to the angular position of the air damper. At each condition of fuel rich and air rich, further combustion values of O_2, CO_2 & CO are stored. This builds up a map of the burner's combustion performance, (see example opposite).

During normal run mode the on-line sample at any position within the burner's firing rate is compared to the commissioned values. There are now 3 individually sampled parameters to verify combustion performance combined with a map of performance either side of the commissioned value.

The on-line CO value is compared to the commissioned value. A higher CO can be attributed to both lean and rich combustion. Excess air around the flame envelope has the effect of chilling the flame edge causing incomplete combustion and hence higher CO levels.

An ingress of air through an ill fitting boiler door or flue section would drive the O_2 value up. Single parameter O_2 systems would see this as lean combustion, trimming back the air damper, but in reality this causes potentially dangerous combustion levels. Similarly single parameter CO_2 systems would see an ingress of air as lower CO_2 levels in the flue, inflicting similar dangerous conditions on the boiler.

By referencing all three parameters against mapped combustion performance the burner can be trimmed back to commissioned levels whilst maintaining the highest degree of safety.

An added benefit of mapped combustion is 'feed forward trim'. In a fuel rich situation where air is being added, as the burner modulates to a new position the deviation of the air damper is added to each air position thus maintaining optimum combustion during modulation.

As a safety feature during lean combustion, where air is being subtracted, when modulating the fuel/air ratio returns to commissioned values until the required firing rate is achieved. Only then will the trim function subtract air, ensuring safe combustion at all times. In this way safety is never compromised by efficiency.

There exist further options to set both upper and lower limits for any or all 3 of the exhaust gases, whereby the burner is shut down if limits are exceeded.

The above philosophy form is protected under Autoflame's patent numbers 02169726 & 00195866.

Patented Auto Adaptive UV Sensor
No. 09/234,391

The benefits of the Autoflame auto adaptive UV Sensor System:

- More accurate flame monitoring increasing plant safety
- Prolonged UV bulb life
- Increased plant reliability and reduced downtime
- Adjustable level of response to ignore background/ spurious radiation, e.g. spark ignition & refractory

A conventional UV Flame Scanner works by applying an AC voltage across the bulb. In the presence of UV light the bulb discharges electrical pulses or counts. As the intensity of the UV light increases so the number of counts increase. On a fully modulating burner there is a great deal of difference in UV intensity between pilot flame and high fire. During pilot, the minimum number of counts required to register a flame is nominally 40, on a high turndown burner at high fire the number of counts may reach 300. If the UV bulb is exposed to this intensity of UV light for a prolonged period, as little as three weeks, it fails closed circuit becoming a 'runaway cell', registering UV light when none is present.

Autoflame use a DC voltage supply to the UV bulb, controlling the amount of time and voltage that is applied to the bulb in one cycle. The user can set an optimum required count for the application. When the 'auto adaptive UV software' commences on burner start-up, the DC voltage applied, time, and value are set to a maximum, as a UV count is registered, the voltage applied and time are modulated to reach the optimum 40 count. Typically for pilot flame the voltage and applied time will be near maximum to register a small flame, as the burner moves to high fire, the voltage and applied time are decreased as the intensity of UV light increases. Keeping the voltage and applied time to a minimum significantly increases the life of the UV bulb. Precise monitoring of individual counts primarily increases the safety and reliability of the flame safeguard and secondly, prolongs the UV bulb life.

Burner Management System Components

Burner Management Systems

Precise fuel/air ratio control for up to 4 fuel programs. Controls and displays a maximum of 4 positioning motors (accuracy = 0.1° angular) and 2 variable speeds drives. The Mk.7 and Mk.6 Evo also include full flame supervision and control for burner start-up and run modes. Both also have the onboard facility for gas valve proving, air pressure proving, on-line gas, air and oil pressure supervision and first-out annunciation.

Positioning Motors

Small positioning motor	• 0.89 ft. lbf, 1.2 NM
Large positioning motor	• 11 ft. lbf, 15 NM
Industrial positioning motor	• 29-72 ft. lbf, 40-100 NM
Special positioning motors up to	• 295 ft. lbf, 400 NM

Load Detectors

Boiler load detectors available for steam and hot water.

Steam sensor	• 1.5 to 445 psi	0.2 to 30.7 bar
Temperature detector	• 50 to 700°F	0 to 400°C
User configurable sensor	• 0-10 V	

Flame Scanners

UV Flame Sensors	• Self Check
	• Standard UL Approved/Standard European
	• High Sensitivity
IR Flame Scanner	• Standard UL Approved/Standard European

Fuel/Air Supply Pressure Sensors & Outside Air Temperature Sensor

Gas pressure sensor	• 0.18 to 60 psi	12.5 to 4140 mbar
Oil pressure sensor	• 0 to 600 psi	0 to 40 bar
Air pressure sensor	• 0 to 1 psi	0 to 65 mbar
Outside air temperature sensor	• -40 to 104°F	-40 to +40°C

Fuel Control Valves

Gas Control Valve	- Sizes: screwed 1" to 3" NPT, flanged 2.5" to 6" 150lb/PN16, 30mm or 50mm thick.
Oil Control Valve	- Stainless steel body with bronze bobbin, suitable for all commercially available oil fuels (various capacities available in both metering and spillback format).
Dual Fuel Valves	- Innovative design allows oil and gas valves to be mounted together utilising only one servo.

Exhaust Gas Analyser

Using individual sensors, the EGA monitors and displays CO_2, O_2, CO, NO, SO_2 or NO_2, efficiency and exhaust gas temperature. On-board self diagnostic software includes self calibration and fully user configurable setup via PC software. In conjunction with an MM the unit provides full 3 parameter trim for CO_2, O_2, CO maintaining commissioned values of combustion irrespective of variations in fuel supply or barometric conditions.

Data Transfer

Data Transfer Interface & Win PC DTI software	Remote monitoring & control for up to 10 sets of MM's and peripherals. Change setpoint, enable/disable burners, select lead/lag. Up to 150 items of information per MM/EGA System can be accessed from via the DTI with the Modbus or Metasys protocols. Autoflame Win PC DTI software allows PC-based on-site control and remote control of up to 255 sites.
Digital I/O Module	16 line voltage inputs and 8 volt free contacts.
Analogue I/O Module	6 inputs/6 outputs - 0-20mA, 4-20mA or 0-10V - user configurable via PC.
IR Upload/Download	Transfer commissioning data via the MM's IR port to PC. Store commissioning data on PC and print report - includes all positions entered in each fuel program, full EGA trim data and options and parameters settings.

ECM 3 - Exterior Lighting Upgrade

PUGET SOUND ENERGY

Energy Efficiency Services

LIGHTING CALCULATION WORKSHEET

Prepared By: MacDonald-Miller Facility Solutions

PROJECT NAME: Highline Communit
PROJECT LOCATION (ADDRESS): 2400 S. 240th St. De

EXISTING SYSTEM										PROPOSED SYSTEM					
Item	E/H *	Location	Qty.	# Lamps /Type	Fixture Watts	Total kW	Hrs/yr	kWh/ Year	Remarks (if Req'd)	Qty.	Fixture Type	Fixture Watts	Total kW	Hrs/yr	kWh/ Year
1	1.0	Parking - 400W HPS	41	HPS	457	18.7	4,200	78,695		41	Induction 300W	305	12.5	4,200	52,521
2	1.0	Parking - 400W HPS Cobra head	24	HPS	457	11.0	4,200	46,066		24	Induction 150W Cobra Head	166	4.0	4,200	16,733
3	1.0	Parking - 200W HPS	4	HPS	245	1.0	4,200	4,116		4	Induction 100W	105	0.4	4,200	1,764
4	1.0	Parking - 400W MH	50	MH	455	22.8	4,200	95,550		50	Induction 300W	305	15.3	4,200	64,050
5	1.0	Parking - 175W MH	1	MH	210	0.2	4,200	882		1	Induction 100W	105	0.1	4,200	441
6	1.0	Walkways - 175W MH	89	MH	210	18.7	4,200	78,498		89	Induction 100W	105	9.3	4,200	39,249
7	1.0	Wall Packs - HPS 150W	40	HPS	170	6.8	4,200	28,560		40	MLSWP30LED50 33W	33	1.3	4,200	5,544
8	1.0	Wall Packs - HPS 70W	48	HPS	86	4.1	4,200	17,338		48	MLCAN20LED50 20W	20	1.0	4,200	4,032
9	1.0	Wall Packs - HPS 50W	154	HPS	68	10.5	4,200	43,982		154	MLSEC14LED50 14W	14	2.2	4,200	9,055
10	1.0	Wall Packs - MH 175W	1	MH	210	0.2	4,200	882		1	MLSWP30LED50 33W	33	0.0	4,200	139
11	1.0	Wall Packs - MH 100W	20	MH	129	2.6	4,200	10,836		20	MLSWP30LED50 33W	33	0.7	4,200	2,772
12	1.0	Wall Packs - MH 70W	41	MH	90	3.7	4,200	15,498		41	MLCAN20LED50 20W	20	0.8	4,200	3,444
13	1.0	Wall Packs - MH 50W	14	MH	62	0.9	4,200	3,646		14	MLSEC14LED50 14W	14	0.2	4,200	823
14	1.0	Walkways - 175W MH Shoebox	10	MH	210	2.1	4,200	8,820		10	MLFL100LED50 100W	102	1.0	4,200	4,284
15	1.0					0.0		0		0			0.0	0	0
16	1.0					0.0		0		0			0.0	0	0
17	1.0					0.0		0		0			0.0	0	0
18	1.0					0.0		0		0			0.0	0	0
19	1.0					0.0		0		0			0.0	0	0
20	1.0					0.0		0		0			0.0	0	0
21	1.0					0.0		0		0			0.0	0	0
22	1.0					0.0		0		0			0.0	0	0
23	1.0					0.0		0		0			0.0	0	0
24	1.0					0.0		0		0			0.0	0	0
25	1.0					0.0		0		0			0.0	0	0
26	1.0					0.0		0		0			0.0	0	0
27	1.0					0.0		0		0			0.0	0	0
28	1.0					0.0		0		0			0.0	0	0
			537			103.2		433,369		537			48.8		204,851

* For non-electric enter 1., for electric enter .9, for cold storage enter 1.2.

Current Rates:	**Total kWh Charge:**	$0.06300
Sch 31	**Avg. Annual Demand Charge:**	$6.97

kWh Reduction: 52.7 **%**
Simple Payback: 12.9 **Years (Before Grant)**

Estimated Energy Savings:	228,518	**kWh/Yr x**	$0.0630	**/kWh =**		$ 14,396.62
Estimated kW Reduction:	54.41	**kW x**	$6.97	**/kW/mo. =**		$ 4,550.77
						$ 18,947.39

MLSEC14LED50

14 WATT SECURITY LIGHT WITH PHOTOCELL

PROJECT NAME
CATALOG NUMBER
NOTES
FIXTURE TYPE

FEATURES:

- Universal 120-277 VAC operation
- 50,000 hour life and maintenance free for up to 13 years
- Mercury free; no UV
- Heavy-duty cast aluminum base and polyester powder coated polypropylene housing maintain a sleek appearance and enable long life
- High quality shatter resistant polycarbonate lens
- Fixture is sealed to be dirt and bug free
- Rear knockouts for mounting convenience
- Dusk to Dawn sensor equipped
- 3 Year Limited Warranty
- Does not attract insects
- Power factor is greater than .99
- BUG Rating - B0 U3 G2

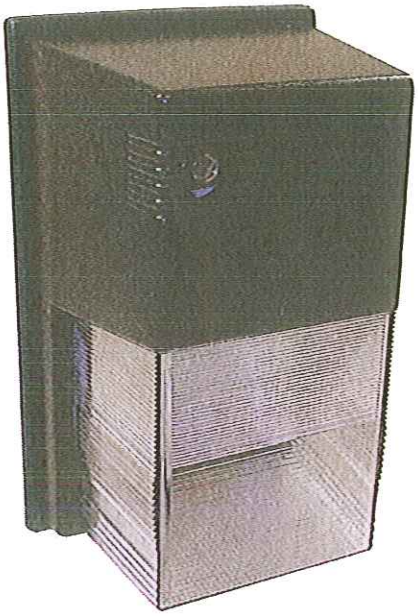

CONSTRUCTION:

Fixture: Heavy-duty cast aluminum base, with a polypropylene housing that is polyester powder coated, and is sealed to be dirt and bug proof

Lens: Polycarbonate lens with UV stabilizers

LED Module: Aluminum components in the LED module act as a heat sink to reduce heat and ensure long life. The module uses directional settings to control the fall of light and the light levels. This fixture is an efficient replacement for metal halide and incandescent fixtures that reduces wattage and extends life.

LED Driver: Self contained driver meets UL 1310 UL 48 Class2

Finish: Dark Bronze finish is polyester powder coated

Installation: Can mount to recessed outlet box or directly to surface

Luminaire Ordering Information:

WATTS	ORDER CODE	MODEL NUMBER	DELIVERED LUMENS	LAMP LIFE (Hrs.)	DIMENSIONS (L"xW"xH")	CCT
14	71416	MLSEC14LED50	887	50,000	11.8 x 6.8 x 5.3	5000

Lighting layouts and spacing criteria available upon request

MaxLite®: 1-800-555-5629 | **Fax:** 973-244-7333 | **Web:** www.maxlite.com | **E-mail:** info@maxlite.com

Revised: 04-24-12

14 WATT SECURITY LIGHT

maxLED by MaxLite

SPECIFICATIONS:

Item	Specification	Details
General Performance	Spacing Criteria	Available upon request
	Color Temperature	5000K
	Lumens Delivered	887
	Efficacy	62.3 lumen/watt
	Color Consistency	Proprietary binning for uniform color
	Lumen Maintenance (L70)	50,000 hours
	IES Classification	Type IV
	Cutoff Class	Non- Cutoff
	B.U.G. Rating	B0 U3 G2
Electrical	Power Factor	Over 98%
	Input Voltage	120V-277V 50/60 Hz
	Power Consumption	14 Watts nominal
Physical	Dimensions	11.8" x 6.8" x 5.3"
	Weight	3 lbs
	Housing	Aluminum & Polypropylene
	Lens	Polycarbonate w/ UV Stabilizers
	Mounting	Can mount to recessed outlet box or direct to surface.
	Operating Temperature	-30°F to 130°F
	Humidity	20% - 85% RH, non condensing
Certification	Certification	N/A
	Material Usage	RoHS compliant; no mercury
	Environment	Indoor / Outdoor
	LED Class	N/A

Lighting layouts and spacing criteria available upon request

Photocell:

Photocell is "potted solid state" and has a 2 minute reset at power disruption.

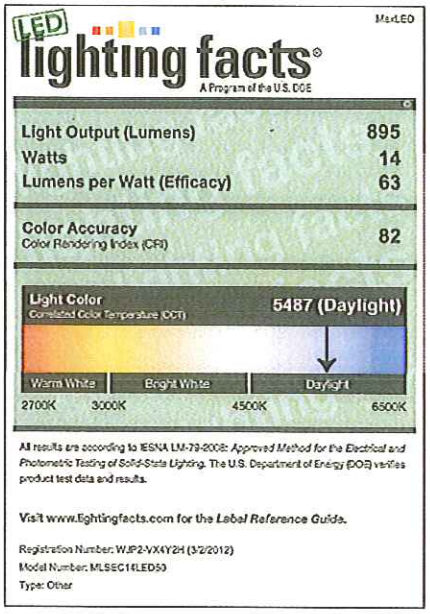

LED lighting facts®
A Program of the U.S. DOE

MaxLED

Light Output (Lumens)	895
Watts	14
Lumens per Watt (Efficacy)	63
Color Accuracy Color Rendering Index (CRI)	82

Light Color
Correlated Color Temperature (CCT) 5487 (Daylight)

Warm White | Bright White | Daylight
2700K 3000K 4500K 6500K

All results are according to IESNA LM-79-2008: *Approved Method for the Electrical and Photometric Testing of Solid-State Lighting*. The U.S. Department of Energy (DOE) verifies product test data and results.

Visit www.lightingfacts.com for the *Label Reference Guide*.

Registration Number: WJP2-VX4Y2H (3/2/2012)
Model Number: MLSEC14LED50
Type: Other

DIMENSIONS:

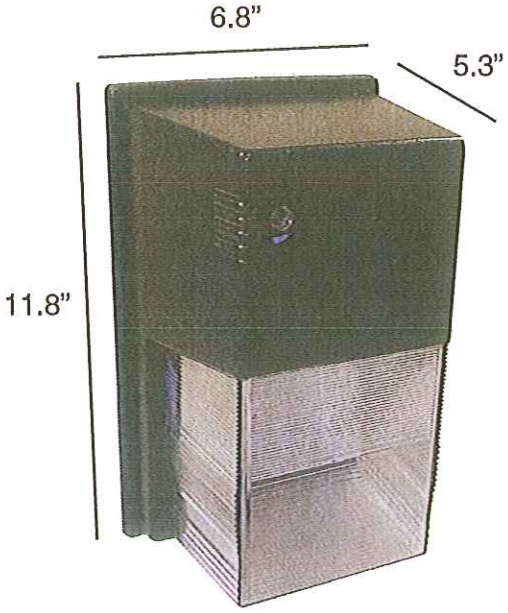

MaxLite

MaxLite®: 1-800-555-5629 | Fax: 973-244-7333 | Web: www.maxlite.com | E-mail: info@maxlite.com

Revised: 04-24-12

MLCAN20LED50

GARAGE AND CANOPY 20W LED LIGHT

The energy efficient LED Ceiling Canopy and GarageMax Garage Fixtures promote uncompromising safety and security in outdoor commercial and industrial environments.

With a full flood beam angle and proprietary binning of LM80-rated LEDs for color consistency, the LED Ceiling Canopy and GarageMax Fixtures provide excellent light and continuous energy savings for a long life.

Fixtures can be mounted to electrical boxes or directly to surfaces.

PROJECT NAME
CATALOG NUMBER
NOTES
FIXTURE TYPE

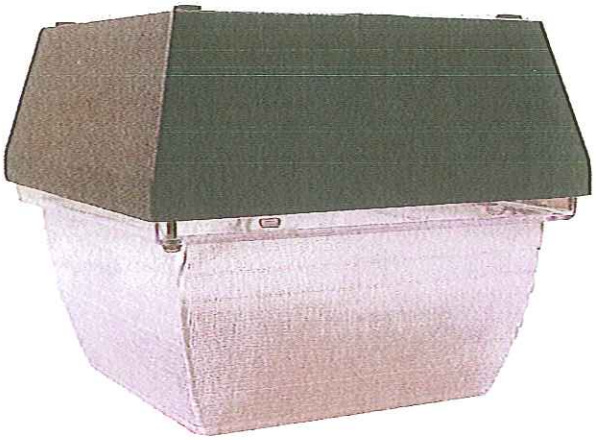

FEATURES:

- Initial lumens: 1500
- Delivered lumens: 1312
- 20 watts is equivalent to 100-watt metal halide
- 5000K
- 50,000 hour life at L70 standards
- Self-contained driver
- Universal 120V through 277V
- Maintenance free and operates without emitting UV or IR rays
- Dusk-to-dawn and occupancy sensor compatible
- Mounts to electrical boxes or conduits
- 5 Year Limited Warranty
- Does not attract insects
- Damp Rated
- Power factor= .98
- CRI = 70
- Bug Rating: B1 U3 G1

CONSTRUCTION:

Fixture: Constructed of one-piece rust and corrosion proof heavy-duty cast aluminum housing (in standard bronze finish) that is TGIC Polyester powder coated and protected from dirt and bugs

Lens: High quality shock proof polycarbonate lens with UV inhibitors

LED Module: LED modules are copper plated to provide high thermal transfer rate and minimize the junction temperature of LEDs to maximize service life.

Luminaire Ordering Information:

WATTS	ORDER CODE	MODEL NUMBER	LUMENS (Hrs.)	LAMP LIFE	DIMENSIONS (L"xW"xH")	CCT
20		MLCAN20LED50	1312	50,000	8.9 x 8.9 x 7.2	5000

MAX12102

MaxLite®: 1-800-555-5629 | Fax: 973-244-7333 | Web: www.maxlite.com | E-mail: info@maxlite.com

Revised: 04-23-12

MLCAN20LED50

GARAGE AND CANOPY 20W LED LIGHT

SPECIFICATIONS:

Item	Specification	Details
General Performance	Spacing Criteria	Available upon request
	Color Temperature	5000K
	Lumens	1312
	Initial Lumens	1500
	Efficacy	60 lumen/watt
	Color Consistency	Proprietary binning for uniform color
	Lumen Maintenance (L70)	50,000 hours
Electrical	Power Factor	Over 98%
	Input Voltage	120V-277V 50/60 Hz
	Power Consumption	20 Watts Nominal
Physical	Dimensions	8.9" x 8.9" x 7.2"
	Weight	6.5 lbs.
	Housing	Aluminum
	Lens	Shock proof polycarbonate
	Mounting	Mounts to electrical boxes or conduit mounting
	Operating Temperature	-30°F to 130°F
	Humidity	20% - 85% RH, non condensing
Certification	Certification	N/A
	Material Usage	RoHS compliant; no mercury
	Environment	Indoor / Outdoor
	LED Class	N/A

Lighting layouts and spacing criteria available upon request

DIMENSIONS:

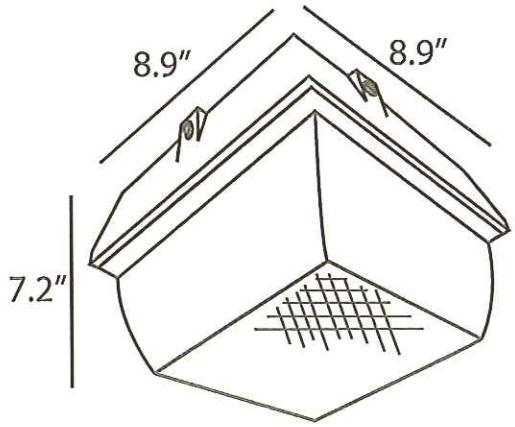

MaxLite®: 1-800-555-5629 | Fax: 973-244-7333 | Web: www.maxlite.com | E-mail: info@maxlite.com

Revised: 04-23-12

MLSWP30LED50

LED WALLMAX - 30 SERIES SMALL WALL PACK

PROJECT NAME
CATALOG NUMBER
NOTES
FIXTURE TYPE

FEATURES:

- Replaces up to 150 Watt Metal Halide
- Universal 120-277V
- Maintenance free for up to 13 Years
- Mercury free; no UV
- Heavy-duty cast aluminum housing; rust and corrosion proof; epoxy coated
- High quality shatterproof glass.
- Sealed fixture is dirt and bug free
- Multiple knockouts for mounting convenience
- Occupancy/Dusk to Dawn sensor compatible
- LM-79/80 data available
- 5 Year Limited Warranty
- Does not attract insects

CONSTRUCTION:

Fixture: Heavy-duty cast aluminum one-piece housing; epoxy coated; rust and corrosion proof. Fixture is sealed to be dirt and bug proof.

Lens: High quality shatterproof glass.

LED Module: Aluminum components in the LED module act as heat sinks to reduce heat and add to life. The module uses directional settings to control the fall of light and the light levels. This makes the fixture an efficient replacement for metal halide and high pressure sodium fixtures, while reducing wattage and extending life.

LED Driver: Self contained driver meets UL 1310 UL 48 Class2.

Finish: Dark Bronze finish is epoxy coated.

Installation: Can mount to recessed outlet box or direct to surface.

Luminaire Ordering Information:

WATTS	ORDER CODE	MODEL NUMBER	DELIVERED LUMENS	LAMP LIFE (Hrs)	DIMENSIONS (L"xW"xH")	K
33	70724	MLSWP30LED50	1640	50,000	14.25 x 9.0 x 7.5	5200

Lighting layouts and spacing criteria available upon request

MAX11200-6-20

MaxLite™: 1-800-555-5629 | **Fax:** 973-244-7333 | **Web:** www.maxlite.com | **E-mail:** info@maxlite.com

LED WALLMAX - 30 SERIES SMALL WALL PACK

maxLED

SPECIFICATIONS:

Item	Specification	Details
General Performance	Spacing Criteria	Available upon request
	Color Temperature	5200K
	Lumens Delivered	1640
	Efficacy	50 lumen/watt
	Color Consistency	Proprietary binning for uniform color
	Lumen Maintenance (L70)	50,000 hours
Electrical	Power Factor	Over 98%
	Input Voltage	120V-277V 50/60 Hz
	Power Consumption	33 Watts
Physical	Dimensions	14.25" x 9.0" x 7.5"
	Weight	6.15 lbs
	Housing	Aluminum
	Lens	High quality shatterproof glass
	Mounting	Can mount to recessed outlet box or direct to surface.
	Operating Temperature	-30˚F to 130˚F
	Humidity	20% - 85% RH, non condensing
Certification	Certification	CETL, FCC, LM79, LM80
	Material Usage	RoHS compliant; no mercury
	Environment	Indoor / Outdoor
	LED Class	L70 rated to 50,000 hours

Lighting layouts and spacing criteria available upon request

Maxlite

lighting factsCM

A Program of the U.S. DOE

Light Output (Lumens)	1640
Watts	33
Lumens per Watt (Efficacy)	50
Color Accuracy Color Rendering Index (CRI)	68

Light Color 5200 (Daylight)
Correlated Color Temperature (CCT)

All results are according to IESNA LM-79-2008: *Approved Method for the Electrical and Photometric Testing of Solid-State Lighting.* The U.S. Department of Energy (DOE) verifies product test data and results.

Visit www.lightingfacts.com for the *Label Reference Guide.*

Registration Number: WJP2-GA8KDP
Model Number: MLSWP30LED50
Type: Outdoor wall pack

DIMENSIONS:

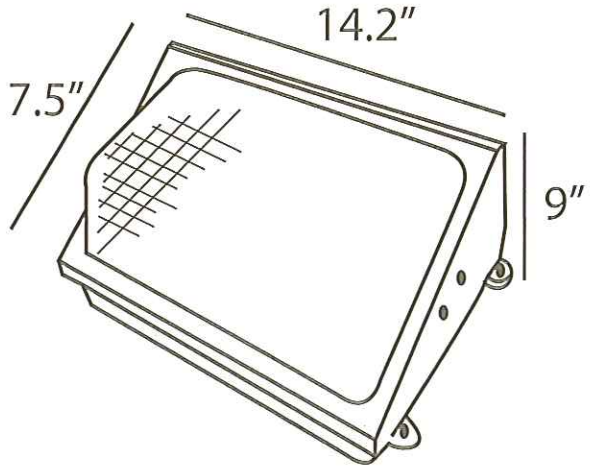

lighting facts
LED Product Partner

Universal Low-Profile Design

LUMARK

A New Revolution in Outdoor Lighting

Pioneered with an industry-first, universal "all-in-one" product platform, the Crosstour LED Wall Pack Series delivers energy-efficient optical control, scalable low-profile form, universal installation and tool-less features. With a pure innovative design, Crosstour LED Wall Pack integrates super-bright LED technology while taking advantage of the stylish, slim profile and rugged die-cast aluminum design. Ultimate versatility in application allows wall or surface, post or bollard, inverted or low-level installations.

Superior Performance

Forward throw, optimized reflector efficiency is the driving force behind reducing operating cost while maximizing fixture spacing. Offered in small and large housing configurations, with brilliant white 5000K or neutral warm 3500K CCT, Crosstour LED Wall Pack incorporates a series of three scalable high-performance, energy-efficient LED lumen packages. With superior 90% energy savings, compared to traditional HID equivalent products, the super-efficient 30W Crosstour LED Wall Pack system delivers up to 2240 lumens. The advanced 20W system provides up to 1360 lumens while the essential 10W system distributes an impressive 720 lumens.

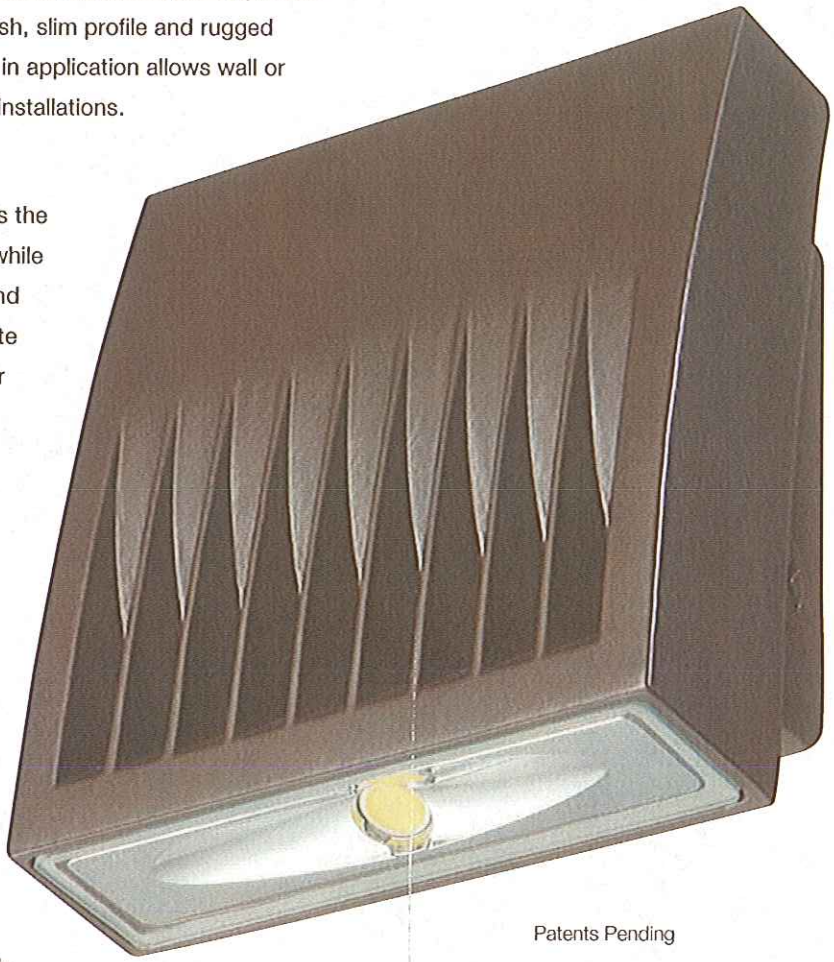

Patents Pending

Industry-First Design

Refined quality and safety is ensured with the Crosstour LED Wall Pack universal back box and secure lock hinge. The industry's first universal back box easily adapts to virtually all standard junction boxes, without the use of adaptor plates or loose hardware. The interface hinge locks the door in place, allowing precise and stable handling when making the tool-less electrical connections.

First-class, energy-efficient optical control, easy universal installation, low-profile design, scalable lumen selection and enhanced safety features confirm the Crosstour LED Wall Pack Series as the absolute choice for outdoor illumination.

SustainabLEDesign

Design Performance Features

Construction

- Slim, low-profile design extends 4" from surface
- Rugged die-cast aluminum door and back box
- Hinged removable door
- Universal back box mounts to standard 3-1/2" to 4" round and octagonal, 4" square, single gang and masonry junction boxes
- Back box includes three 1/2" NPT threaded conduit entry points
- External fin design extracts heat from fixture surface
- One-piece silicone gasket seals door and back box
- Key hole gasket adapts to junction box or wall installation
- Single-point, stainless steel captive screw secures door
- Wet location listed, IP66 rated, UL ground mount sprinkler listed

Finish

- Five-stage Super TGIC carbon bronze or summit white polyester powder coat paint withstands extreme climate conditions while providing optimal color and gloss retention.

Carbon Bronze

Summit White

Electrical

- 10W model operates in -40°C to 40°C
- 10W, 120V 50/60 Hz
- 20W and 30W models operate in -30°C to 40°C
- 20W and 30W, 120-277V, 50/60 Hz
- LED driver mounts to housing for optimal heat sinking
- Integral electronic LED driver incorporates surge protection
- Back box suitable as an electrical wiring compartment
- Three 1/2" threaded conduit entry points allow for thru-branch wiring
- LED maintains more than 70% of initial light output after 50,000 hours

Optical

- Silicone sealed LED optical chamber
- Custom-engineered, mirrored anodized reflector
- Impact-resistant tempered glass
- Thermally optimized solid-state LED
- 5000K or 3500K CCT LED

Warranty

- Five-year limited warranty

Design Benefits

Advanced Thermal Cooling

Cooling fins dissipate heat while quickly shedding water and debris. Sealed optical chamber prohibits contaminants from entering the light source.

ADA Compliant Low-Profile Design

Engineered to install in multiple applications. Incorporates ADA specifications when mounted at low levels without compromising illumination.

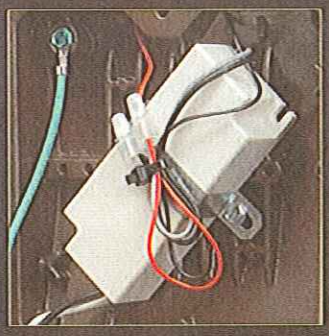

Energy-Efficient LED Driver

Configureed with the most efficient LED driver to minimize energy consumption while maximizing fixture life.

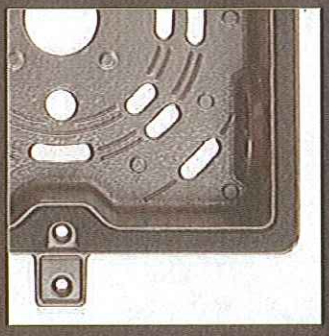

IP66 Ingress Protection Rated

Gasketed to seal out contaminants while allowing precise installation to junction box or wall surface.

Ordering Information

Sample Number: XTOR2A-N-WT-PC1

Series	LED Kelvin Color[3]	Housing Color	Options (Specify Voltage)[4]	Accessories (Order Separately)[5]
XTOR1A=Small Door, 10W[1] **XTOR2A**=Small Door, 20W **XTOR3A**=Large Door, 30W[2]	__=Bright White (Standard), 5000K **N**=Neutral Warm White, 3500K	__=Carbon Bronze (Standard) **WT**=Summit White	**PC1**=120V Photocontrol **PC2**=277V Photocontrol (208-277V)	**WG/XTOR**=Wire Guard

Stock Ordering Information

10W Series	20W Series	30W Series
XTOR1A=10W, 5000K, Carbon Bronze **XTOR1A-WT**=10W, 5000K, Summit White **XTOR1A-PC1**=10W, 5000K, Carbon Bronze, 120V PC	**XTOR2A**=20W, 5000K, Carbon Bronze **XTOR2A-N**=20W, 3500K, Carbon Bronze **XTOR2A-WT**=20W, 5000K, Summit White **XTOR2A-PC1**=20W, 5000K, Carbon Bronze, 120V PC	**XTOR3A**=30W, 5000K, Carbon Bronze **XTOR3A-N**=30W, 3500K, Carbon Bronze **XTOR3A-WT**=30W, 5000K, Summit White **XTOR3A-PC1**=30W, 5000K, Carbon Bronze, 120V PC

Quick Ship Ordering Information (Five-Days)

10W Series	20W Series	30W Series
XTORA1-WT-PC1=10W, 5000K, Summit White, 120V PC	**XTOR2A-PC2**=20W, 5000K, Carbon Bronze, 277V PC **XTOR2A-WT-PC1**=20W, 5000K, Summit White, 120V PC **XTOR2A-WT-PC2**=20W, 5000K, Summit White, 277V PC **XTOR2A-N-WT**=20W, 3500K, Summit White **XTOR2A-N-PC1**=20W, 3500K, Carbon Bronze, 120V PC **XTOR2A-N-PC2**=20W, 3500K, Carbon Bronze, 277V PC **XTOR2A-N-WT-PC1**=20W, 3500K, Summit White, 120V PC **XTOR2A-N-WT-PC2**=20W, 3500K, Summit White, 277V PC	**XTOR3A-PC2**=30W, 5000K, Carbon Bronze, 277V PC **XTOR3A-WT-PC1** =30W, 5000K, Summit White, 120V PC **XTOR3A-WT-PC2**=30W, 5000K, Summit White, 277V PC **XTOR3A-N-WT**=30W, 3500K, Summit White **XTOR3A-N-PC1**=30W, 3500K, Carbon Bronze, 120V PC **XTOR3A-N-PC2**=30W, 3500K, Carbon Bronze, 277V PC **XTOR3A-N-WT-PC1**=30W, 3500K, Summit White, 120V PC **XTOR3A-N-WT-PC2**=30W, 3500K, Summit White, 277V PC

NOTES: 1 120V only. XTOR1A not available in 3500K. **2** DesignLights™ Consortium qualified for wall mount applications (down mount only). Consult DesignLights™ Consortium website for other applications. **3** PC2 only available in 20W and 30W models. **4** PC1 and PC2 photocontrols are factory installed. PC2 not available on XTOR1A models. **5** Order WG/XTOR wire guard separately. **6** Specifications and dimensions subject to change without notice. Consult your Cooper Lighting Representative or visit our website at www.cooperlighting.com for available options, accessories and ordering information.

Dimensions

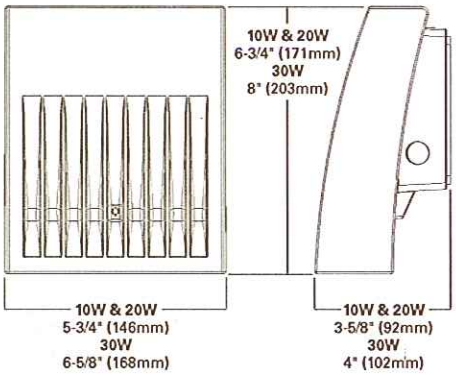

Options & Accessories

Photocontrol (PC1 or PC2)

Wire Guard (WG/XTOR)

Additional Information

Compliances		Technical Data (Electronic Driver)		Shipping Data (Approximate Net Weight)
UL and cUL Wet Location Listed	ARRA Compliant	40°C Ambient Temperature Rating	-40 / -30°C Minimum Temperature	10W and 20W - 3.7 lbs. (1.7 kgs.)
IP66 Ingress Protection Rated	ADA Compliant	External Supply Wiring 90°C Minimum	120V or 120-277V, 50/60 Hz	30W - 5.2 lbs. (2.36 kgs.)
LM79 / LM80 Compliant	RoHS Compliant			
DLC Qualified Models				

LISTED LISTED DESIGNLIGHTS CONSORTIUM RoHS Compliant

Scan this QR Code to learn more about Crosstour LED Wall Pack Luminaire.

LUMARK®

DESCRIPTION

The patent pending Lumark Crosstour™ Floodlight Kit easily attaches to the Crosstour LED Wall Pack luminaire. The floodlight kit converts 10W, 20W and 30W Crosstour wall mount luminaires into floodlighting luminaires suitable for ground or wall mount applications. Crosstour LED offers seamless architectural style with super bright energy efficient LEDs. The low-profile, rugged construction of the easy to install knuckle or trunnion base along with stainless steel hardware, visors and impact guards make Crosstour LED an "all-in-one" universal product offering that installs virtually anywhere.

Catalog #		Type
Project		
Comments		Date
Prepared by		

SPECIFICATION FEATURES

Application

The Crosstour LED luminaire with knuckle or trunnion floodlight kit is ideal for floodlight illumination of ground mounted signage, building façade architecture or for wall mount applications where greater forward throw illumination is needed.

Construction

KNUCKLE FLOODLIGHTING BASE: Heavy-duty, die-cast aluminum knuckle base utilizes tooth-lock adjustment mechanism for both solid engagement and easy aiming adjustment. Visual 15° adjustment indicators allow for 180° rotation of the luminaire. Knuckle adjustment is made via the stainless steel screw. Knuckle is 2.0G vibration rated. Knuckle fits ½" NPS available mounting junction box cover [supplied by others] and is secured with supplied locking nut. Attaches directly to the Crosstour LED Wall Mount back box via the supplied magnetic stainless steel hardware.

TRUNNION FLOODLIGHTING BASE: Adjustable heavy-gauge steel trunnion-mount utilizes interlocking slide adjustment mechanism for precise aiming and secure installation. Supplied standard with 12" of pre-wired SOOW 600V wet location rated cord. Visual 15° adjustment indicators allow for 180° rotation of the luminaire. Trunnion base can be lag bolted to any surface and is 2.0G vibration rated. Quickly attaches to the Crosstour LED Wall Mount back box via the supplied magnetic stainless steel hardware.

Electrical

Three-wire electrical conductor wire is pre-wired to the knuckle base allowing easy wiring to junction box utility power and to the Crosstour LED luminaire. Trunnion base includes 12" SOOW cord/whip. The SOOW cord is 18AWG and is rated for -40°C to 90°C. SOOW cord is highly flexible and features stranded copper conductors, separator and is secured in a thermoplastic elastomeric rubber jacket.

Top Visors and Impact Guards

Supplied with heavy duty steel top visors that quickly attach to the Crosstour LED Wall Pack 10W, 20W and 30W housing via the supplied stainless steel hardware. Crosstour top visors control glare and spill light in all directions. Useful in uplighting applications to limit light travel above intended wall surface or sign. 1/8" Thick UV stabilized impact guards install directly into the visor via the side-slot lock feature. Useful in protecting the Crosstour LED glass lens from projectile objects when mounted at low levels.

Finish

Crosstour is protected with a 5-stage TGIC super durable carbon bronze or summit white polyester powder coat paint. Premium TGIC powder coat paint finishes withstand extreme climate conditions while providing optimal color and gloss retention of the Crosstour installed life.

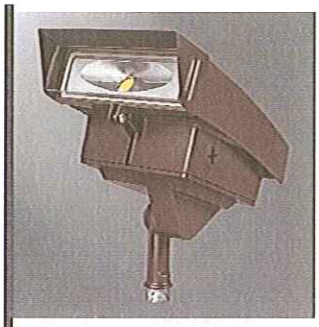

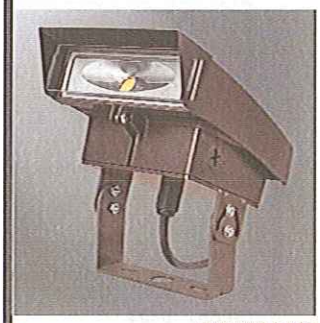

LUMINAIRE SOLD SEPARATELY

Crosstour LED Floodlight Kit

CERTIFICATION DATA
[Floodlight Kit Only]
UL/cUL Wet Location Listed
2.0G Vibration Rated

SHIPPING DATA:
Approximate Net Weight:
1.2 – 1.9 lbs. [0.5 – 0.9 kgs.]

STOCK ORDERING INFORMATION

KNUCKLE MOUNT FLOODLIGHTING KIT	TRUNNION MOUNT FLOODLIGHTING KIT
XTORFLD-KNC = Carbon Bronze Knuckle Base With Locking Nut, Small And Large Top Visors And Impact Shields	**XTORFLD-TRN** = Carbon Bronze Trunnion Base With 12" Wet Location SOOW Cord, Small And Large Top Visors And Impact Shields
XTORFLD-KNC-WT = Summit White Knuckle Base With Locking Nut, Small And Large Visors And Impact Shields	**XTORFLD-TRN-WT**= Summit White Trunnion Base With 12" Wet Location SOOW Cord, Small And Large Top Visors And Impact Shields

DIMENSIONS

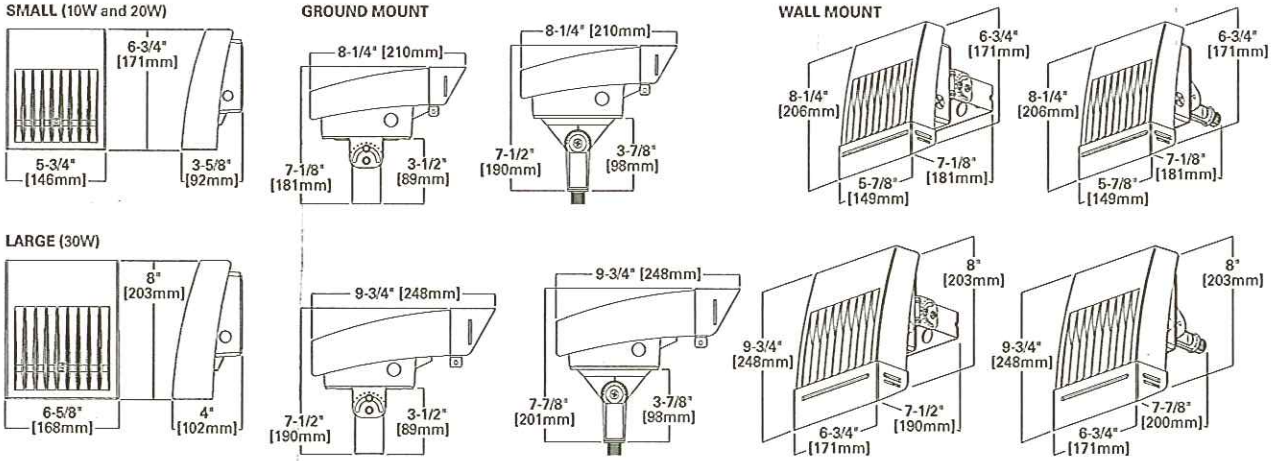

LUMENS - CRI / CCT TABLE

CRI/CCT Table

LED Information	XTOR1A	XTOR2A	XTOR2A-N	XTOR3A	XTOR3A-N
Delivered Lumens (Wall Mount)	719	1432	1323	2649	2273
Delivered Lumens (With Flood Kit)	703	1424	1315	2614	2243
CCT (Kelvin)	5000	5000	3500	5000	3500
Color Rendering Index (CRI)	68	65	68	65	68

MLAR Area Lights

LED - Area Light Series

LED Area Lights are an efficient, energy saving replacement for metal halide and high-pressure sodium fixtures, containing an universal voltage driver.

Fixtures come standard with a 6" extruded arm in standard dark bronze; a white finish is also avaialble.

PROJECT NAME	
CATALOG NUMBER	
NOTES	
FIXTURE TYPE	FIXTURE SCHEDULE

FEATURES:

- Replaces up to 400 watt pulse start metal halide
- Lumens delivered: 70W: 4141
  100W: 6963
  140W: 8400
- Total watts consumed: 70W: 60.8
  100W: 101.3
  140W: 139.9
- CCT: 5000K
- 50,000 hour rated life at L70 standards
- CRI: 67 to 73
- Full cutoff classification in type V square distribution
- Universal 120V through 277V, 50/60Hz driver
- Constructed without any hazardous materials
- Compatible with mechanical relay type Photocell and occupancy sensor
- LM-79/80 reports available
- DesignLights™ Consortium qualified
- 5 year limited warranty
- Does not attract insects
- IES BUG ratings – 70W: B3/U0/G0 Rating
  100W: B3/U0/G0 Rating
  140W: B4/U0/G0 Rating
- Black ceramic paint frit lens mask reduces glare and improves appearance
- 6" extruded aluminum arm included

MLFL70LED50

MLFL100LED50

MLFL140LED50

CONSTRUCTION:

Fixture: The heavy duty cast aluminum one-piece housing is polyester powdercoated and sealed from dirt, water and insects with a hinged door with shock-proof tempered glass.

Lens: Tempered Glass

LED Module: Copper plating provides high thermal transfer rate, minimizing the junction temperature of the LEDs.

Finish: dark bronze (standard) or white (optional)

Luminaire Ordering Information:

Watts	Order Number	Model Number	Lumens	CRI	Lamp Life (Hrs.)	Dimensions (L"xW"xH")	CCT
60.8	71324	MLAR70LED50	4141	67	50,000	16.5" x 16.5" x 7.5"	5000
101.3	71325	MLAR100LED50	6963	68	50,000	16.5" x 16.5" x 7.5"	5000
139.9	71326	MLAR140LED50	8400	73	50,000	16.5" x 16.5" x 7.5"	5000
60.8	71642	MLAR70LED50W	4141	67	50,000	16.5" x 16.5" x 7.5"	5000
101.3	71641	MLAR100LED50W	6963	68	50,000	16.5" x 16.5" x 7.5"	5000
139.9	71643	MLAR140LED50W	8400	73	50,000	16.5" x 16.5" x 7.5"	5000

MAX12132

Lighting layouts and spacing criteria available upon request

Replacement/Optional arms listed on back.

MaxLite®: 1-800-555-5629 | **Fax:** 973-244-7333 | **Web:** www.maxlite.com | **E-mail:** info@maxlite.com

Revised: 06-12-12

MLAR Area Lights

LED - Area Light Series

SPECIFICATIONS:

Item	Specification	MLAR70LED50	MLAR100LED50	MLAR140LED50
General Performance	Spacing Criteria	Available upon request	Available upon request	Available upon request
	CCT	5000K	5000K	5000K
	CRI	67	68	73
	Delivered Lumens	4141	6963	8400
	Efficacy	68 lumen/watt	68.3 lumen/watt	60 lumen/watt
	Color Consistency	Proprietary binning for uniform color	Proprietary binning for uniform color	Proprietary binning for uniform color
	Lumen Maintenance (L70)	50,000 hours	50,000 hours	50,000 hours
Electrical	Power Factor	Over 91%	Over 90%	Over 90%
	Input Voltage	120V-277V 50/60 Hz	120V-277V 50/60 Hz	120V-277V 50/60 Hz
	Power Consumption	60.8 Watts	101.3 Watts	139.9 Watts
Physical	Dimensions	16.5” x 16.5” x 7.5”	16.5” x 16.5” x 7.5”	16.5” x 16.5” x 7.5”
	EPA	1.10	1.10	1.10
	Weight	17 lbs.	17.1 lbs.	17.3 lbs.
	Housing	Aluminum	Aluminum	Aluminum
	Lens	Tempered Glass	Tempered Glass	Tempered Glass
	Mounting	6" Extruded Aluminum Arm, Std.	6" Extruded Aluminum Arm, Std.	6" Extruded Aluminum Arm, Std.
	Operating Temperature	-30˚F to 130˚F	-30˚F to 130˚F	-30˚F to 130˚F
Certification	Humidity	20% - 85% RH, non condensing	20% - 85% RH, non condensing	20% - 85% RH, non condensing
	Certification	cETLus, FCC, LM79, LM80, DLC	cETLus, FCC, LM79, LM80, DLC	cETLus, FCC, LM79, LM80, DLC
	Material Usage	RoHS compliant; no mercury	RoHS compliant; no mercury	RoHS compliant; no mercury
	Environment	Outdoor	Outdoor	Outdoor
	LED Class	N/A	N/A	N/A

Lighting layouts and spacing criteria available upon request
***Values based on 25’ mounting heights**

DIMENSIONS:

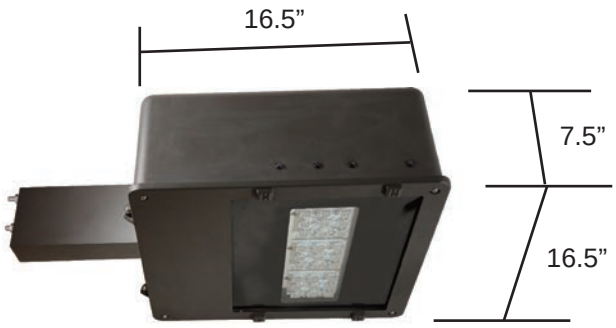

Replacement/Optional Arms

ORDER CODE	MODEL NUMBER	DESCRIPTION
71454	AR6STBZ	6” area light arm for 4"-6" square poles (bronze)
71455	AR12STBZ	12” area light arm for 4"-6" square poles (bronze)
71453	AR12RPBZ	12” area light arm for 4"-6" round poles (bronze)
71592	AR6STW	6” area light arm for 4"-6" square poles (white)
71640	AR12STW	12” area light arm for 4"-6" square poles (white)
71646	AR12RPW	12” area light arm for 4"-6" round poles (white)

MaxLite®: 1-800-555-5629 | **Fax:** 973-244-7333 | **Web:** www.maxlite.com | **E-mail:** info@maxlite.com

Revised: 06-12-12

Fulham HIGH HORSE®
INDUCTION LIGHTING SYSTEMS

SYSTEM MODEL #: | DATE / /

PROJECT

TYPE

BULB SYSTEM

BULB TYPE LAMP AND ELECTRONIC BALLAST

Model Number	Watts	Input Current (Amp) 120V - 277V	Input Power	Rated Initial Luminance (LM)	Efficacy (LM/W)*	Luminance Maintenance (60Khrs)	CRI	Color Temp. (Kelvin)	Average Lamp Life (Hours)
HH-ILS-BP35-5K	35	0.31 - 0.13	37	2450 - 2625	70 - 75				
HH-ILS-BP55-5K	55	0.48 - 0.21	58	4125 - 4380	75 - 80				
HH-ILS-BP85-5K HH-ILS-BDS85-5K	85	0.74 - 0.32	89	6375 - 6800	75 - 80				
HH-ILS-BP100-5K HH-ILS-BDS100-5K	100	0.88 - 0.38	105	7500 - 8000	75 - 80				
HH-ILS-BP120-5K	120	1.05 - 0.45	126	9000 - 9600	75 - 80	70%-75%	> 80	2720K - 6500K 5K Standard Color	100,000
HH-ILS-BP165-5K HH-ILS-BDS165-5K	165	1.44 - 0.62	173	11550 - 12375	70 - 75				
HH-ILS-BP200-5K HH-ILS-BDS200-5K	200	1.75 - 0.76	210	14000 - 15000	70 - 75				
HH-ILS-GDS-250-5K	250	2.19 - 0.95	263	17500 - 18750	70 - 75				

* LM/W is based on Lamp Power.

SPECIFICATIONS COMMON TO ALL BALLASTS

Input Voltage	120V-277V (UNV)	Case Temp.	<65°C
Input Frequency	50/60 Hz	Operating Temp.	(0°C to 50°C)
Output Frequency	250K Hz	Open Fixture	
THD	< 10%	Operating Temp.	(-20°C to 50°C)
Power Factor	> 0.95	Closed Fixture	
Constant Wattage Ouput	± 5%	Max Remote Distance**	4.5 ft. (54")
EMI/RFI Compliance	FCC Part 18-A	Sound Rating	Class A
Surge Protection	Yes		

CERTIFICATIONS

C UL US
E323972

**IMPORTANT: Do not modify wiring type or length without contacting Fulham.

Hi-Pot Testing	Contact Fulham before performing test(s).
Wiring	Plug and Play Connectors. Contact Fulham for wiring support.

SYSTEM MODEL NUMBER EXAMPLE

HH-ILS-BP100-5K - A 100 Watt Induction System with Bulb Lamp, Profile Ballast and 5000 Kelvin Temp.

HH	ILS	B	P	100	5K
HH = HIGHHORSE	ILS = INDUCTION LIGHTING SYSTEM	B = BULB LAMP G = GLOBE LAMP	P = PROFILE BALLAST DS = DISC BALLAST	SYSTEM WATTS	KELVIN TEMP. Specify Kelvin when ordering. 5K is standard stock color.

This is an original product from Fulham Co., Inc.

Fulham extends a limited warranty only to the original purchaser or to the first user for a period of 5 years from the date of manufacture when properly installed and operated under normal conditions of use. For complete terms and conditions, please reference the Fulham product catalog (www.fulham.com).
Due to a program of continuous improvement, Fulham reserves the right to make modifications or variations in design or construction to the equipment described. 2009-514-1-REV L

Fulham HIGH HORSE®
INDUCTION LIGHTING SYSTEMS

SYSTEM MODEL #:	DATE / /
PROJECT	
TYPE	

LAMP SPECIFICATIONS

Lamp Type	
Bulb	Internal Inductor Type
Hybrid Fluorescent	All
Primary Ignition	Low Frequency Inductor Coil
Thermal Management	
Induction Lamp Core Mounting Base Temp.	100°C - 120°C
Amalgam Lamp Tip Temperature Range[1]	55°C - 125°C
Bulb	Convection or Conduction
Lamp Operation (Highly Stable)	
Kelvin Temperature (Standard Stock)	5000K
Other Kelvin Temperatures Limited Stock[2] Custom[3]	 3500K, 4000K 2700K, 3000K, 6000K, 6500K
Kelvin Color Temperature Tolerance	±300K
Color Temperature Fluctuation	Low
LPW Fluctuation	Low
Ambient Temperature Fluctuation	Low
Temperature (Closed Fixture)	-20°C
Temperature (Open Fixture)	0°C
Temperature (Closed Fixture)	-40°C (Contact Fulham)
EMI	Meets International Standard L Level FCC Non-Consumer Units Compliant FCC 47-CFR Part 18

[1] LPW is related to the temperature of Amalgam and Kelvin Temperature to maintain >90% output.
[2] Limited stock on hand. Lead time varies.
[3] Must be ordered. Ten week lead time and orders are non-cancellable. Only large orders are accepted.

Vibration Tests
The HighHorse Induction lamp is designed to tolerate shock and vibration that would be expected in typical applications such as post top, bridge, roadway underpass or tunnel lighting. HighHorse Induction lamps have been tested under the following conditions with no damage:

Shock - Lamps subjected to three (3) one-half wave shocks of 10 ms duration at 20 g.

The vibration parameters were adapted from ANSI C136.31-2001, American National Standard for Roadway Lighting Equipment - Luminaire Vibration, Section 5, luminaire vibration test.

Start Freq.	Amplitude	End Freq.	Amplitude
5 Hz	1.5 G	7.07107 Hz	3.5 G
10 Hz	3.5 G	30 Hz	3.5 G

Sweep between 5 Hz and 30 Hz at 0.861654 Min/sweep (Linear)
Duration: 100,000 cycles at 100%
Total test time: 1:36:30

Care should be taken when mounting the ballast to minimize vibration

UV (bare lamp-less with lens)	5uw/cm2

This is an original product from Fulham Co., Inc.

Fulham extends a limited warranty only to the original purchaser or to the first user for a period of 5 years from the date of manufacture when properly installed and operated under normal conditions of use. For complete terms and conditions, please reference the Fulham product catalog (www.fulham.com).
Due to a program of continuous improvement, Fulham reserves the right to make modifications or variations in design or construction to the equipment described.

INDUCTION LIGHTING SYSTEMS

SYSTEM MODEL #:	DATE / /
PROJECT	
TYPE	

BULB SPECIFICATIONS

Amalgam Hg. Content (Low)	
Amalgam Type	High Quality Solid Pellet
35W - 250W Bulb Type Lamps	4 Mg. - 8 Mg.
35W - 250W Lamps	<3.5%
Lamp Orientation	
Bulb	Universal
Lamp Compatibility	
Bulb	HighHorse Profile/Disc Ballast

Lamp Advanced Features

- Ultra-High Life 100,000 Hrs Lamp Technology
- Wide Range of Wattage Options 35W – 250W
- Full Kelvin Color Range 2700 – 6500K (see availability on page 2)
- Instant Start
- Flicker Free Operation
- Frequency Tuned Wattage to Ballast
- High Efficacy
- High CRI (Color Rendering Index)
- Low Lamp Lumen Depreciation
- High Quality Solid Mercury for Stable Operation
- Low Mercury Content
- Pre-Wired Lamp Input Connector
- Universal Heat Sink Mounting
- Universal Orientation
- Profile and Disc Ballast Compatible
- Operates with Motion Sensor Line Control

Fulham's induction lamps and ballasts are exempt from the Buy American Provisions (Section 1605) of the American Reinvestment and Recovery Act-2009. Fulham's Induction Lamps and Ballasts therefore qualify for EERE Recovery Act Funds. For more information about Fulham's Induction Lighting System and Retrofit Program please visit www.fulham.com.

This is an original product from Fulham, Co., Inc.

Fulham extends a limited warranty only to the original purchaser or to the first user for a period of 5 years from the date of manufacture when properly installed and operated under normal conditions of use. For complete terms and conditions, please reference the Fulham product catalog (www.fulham.com).
Due to a program of continuous improvement, Fulham reserves the right to make modifications or variations in design or construction to the equipment described. 2009-514-3-REV L

Fulham HIGH HORSE®
INDUCTION LIGHTING SYSTEMS

SYSTEM MODEL #: | DATE / /

PROJECT

TYPE

PERFORMANCE CHARTS

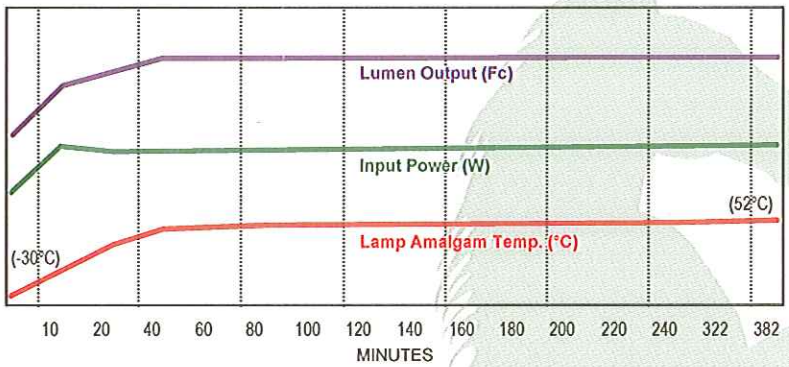

Cold Start Lumen Maintenance Chart

HighHorse induction systems operate within a wide range of ambient; the chart is an example of a 100W induction system operated at extreme cold temperature. It is recommended if the system requires a cold start at -30°C that a thermal blanket be installed at the factory on the amalgam tip; this will ensure a consistent start and rapid stabilization of the lamp and lumen output.

Closed fixture example, actual performance varies with fixture types.

NOTE: Purpose of Lumen Maintenance Chart is strictly to show relation of the three variables over time.

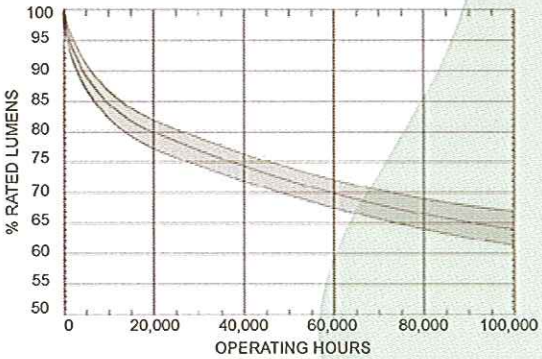

Rated Lumen Maintenance Chart

Rated Lumen Maintenance is largely determined by operating temperature of the lamp and quality of lamp design; Fulham HighHorse induction systems are designed and manufactured with high quality tri-phosphors and solid amalgam to optimize the performance and rated life of the lamp. The above chart is intended to represent an average rated lumen output stated as a percentage of the initial lumen output over the rated life of the lamp. Operating the lamp within the temperatures specification will typically result in not less than 70% lumen output at 60Khrs.

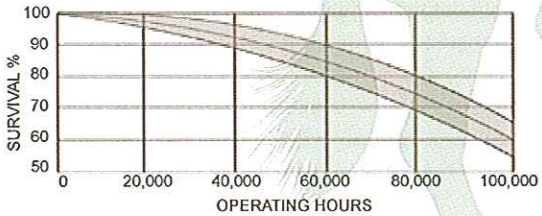

System Rated Life Chart

System Rated Life varies with operating temperature and application. Fulham HighHorse induction generators are designed with high quality long lasting components and when operated at the rated Tc 65°C expected life is 60Khrs with failure rate of 15% to 20%. Operating temperatures less than the rated Tc 65°C can typically improve life expectancy and reduce failure rate.

This is an original product from Fulham, Co., Inc.

Fulham extends a limited warranty only to the original purchaser or to the first user for a period of 5 years from the date of manufacture when properly installed and operated under normal conditions of use. For complete terms and conditions, please reference the Fulham product catalog (www.fulham.com).
Due to a program of continuous improvement, Fulham reserves the right to make modifications or variations in design or construction to the equipment described.

Fulham HIGH HORSE®
INDUCTION LIGHTING SYSTEMS

SYSTEM MODEL #:	DATE / /
PROJECT	
TYPE	

TEMPERATURE TEST POINTS

PLEASE NOTE: Induction lamps are fragile and require care when handling; do NOT allow the glass to come in contact with metal objects. The amalgam glass can easily be broken.

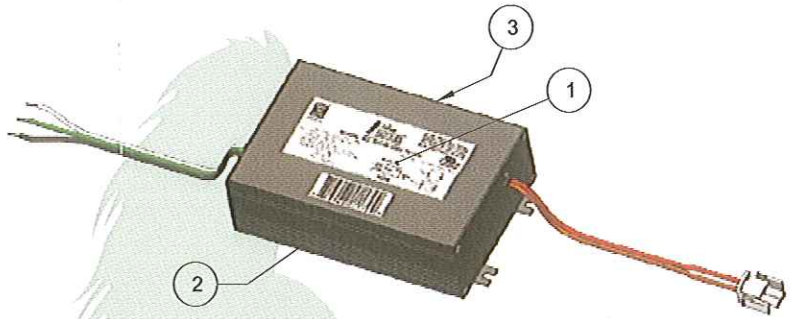

PROFILE BALLAST

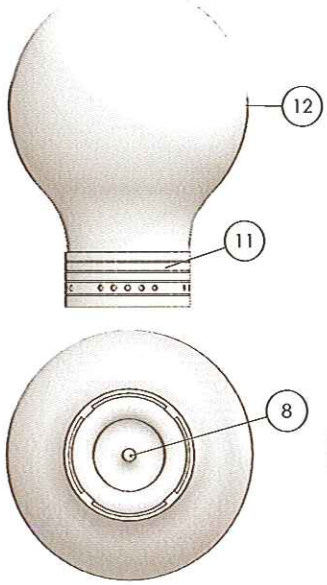

BULB LAMP

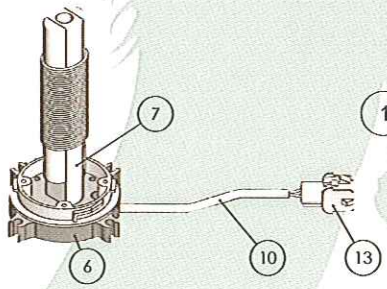

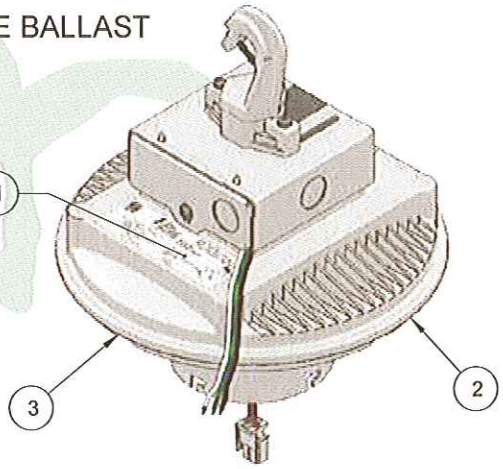

DISC BALLAST

For the 165 W-250W Bulb the amalgam is located to the side of the lamp, instead of the center of the lamp (test point #8a).

Note: Test points 2 and 3 are on the side of the ballast; location is not precise.

TEMPERATURE POINTS			
TEST POINT	LOCATION	RATED TEMPERATURE	MAX TEMPERATURE
1	BALLAST: TC	< 65°C (149°F)	65°C (149°F)
2	BALLAST: SIDE 1	< 65°C (149°F)	65°C (149°F)
3	BALLAST: SIDE 2	< 65°C (149°F)	65°C (149°F)
4	BALLAST PLATE/MOUNTING LOCATION	N/A	N/A
5	BALLAST AMBIENT	N/A	N/A
6	LAMP BASE (HEAT SINK)	< 120°C (248°F)	120°C (248°F)
7	LAMP POWER COUPLER	< 120°C (248°F)	130°C (266°F)
8	GLASS VESSEL AMALGAM TIP	55°C (131°F) - 125°C (257°F)	125°C (257°F)
9	LAMP AMBIENT	< 80°C (176°F)	100°C (212°F)
10	POWER COUPLER WIRE RATING	< 140°C (284°F)	150°C (302°F)
11	GLASS VESSEL PLASTIC SLEEVE	<150°C (302°F)	180°C (356°F)
12	GLASS VESSEL @ MAX DIAMETER	<140°C (284°F)	150°C (302°F)
13	WIRE CONNECTOR	<105°C (221°F)	105°C (221°F)

Temperature measurements are recommended to be at the rated temperature instead of the maximum temperature for best performance. Maximum lamp temperatures can not be exceeded at the maximum ambient temperature of the fixture.

This is an original product from Fulham Co., Inc.

Fulham extends a limited warranty only to the original purchaser or to the first user for a period of 5 years from the date of manufacture when properly installed and operated under normal conditions of use. For complete terms and conditions, please reference the Fulham product catalog (www.fulham.com).
Due to a program of continuous improvement, Fulham reserves the right to make modifications or variations in design or construction to the equipment described. 2009-514-5-REV L

Fulham HIGH HORSE®
INDUCTION LIGHTING SYSTEMS

SYSTEM MODEL #:	DATE / /
PROJECT	
TYPE	

DIMENSIONS - BULB

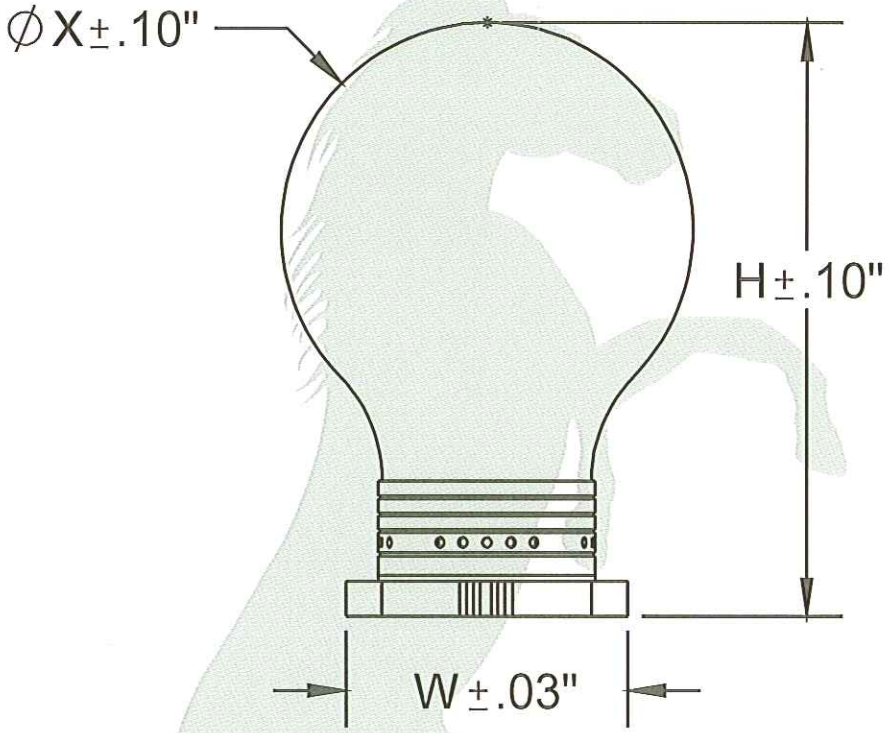

Bulb Lamp

BULB LAMP

Model No.	H (in)	W (in)	ØX (in)	Input Wire L (in)*
HH-IL-B35W5K	5.51	2.27	3.89	8-12
HH-IL-B55W5K	6.09	2.92	4.27	8-12
HH-IL-B85W5K	6.09	2.92	4.27	8-12
HH-IL-B100W5K	7.18	2.92	5.12	11-15
HH-IL-B120W5K	7.18	2.92	5.12	11-15
HH-IL-B165W5K	8.82	3.46	5.48	16-21
HH-IL-B200W5K	8.82	3.46	5.48	16-21
HH-IL-G250W5K**	9.37	2.51	6.65	16-21

Contact Fulham for detailed drawings.
* Subject to change. Contact Fulham for specific wire lengths.
** 250W Globe only available with disc generator

This is an original product from Fulham, Co., Inc.

Fulham extends a limited warranty only to the original purchaser or to the first user for a period of 5 years from the date of manufacture when properly installed and operated under normal conditions of use. For complete terms and conditions, please reference the Fulham product catalog (www.fulham.com).
Due to a program of continuous improvement, Fulham reserves the right to make modifications or variations in design or construction to the equipment described.

Fulham HIGH HORSE®
INDUCTION LIGHTING SYSTEMS

SYSTEM MODEL #: | DATE / /

PROJECT

TYPE

DIMENSIONS - BALLASTS

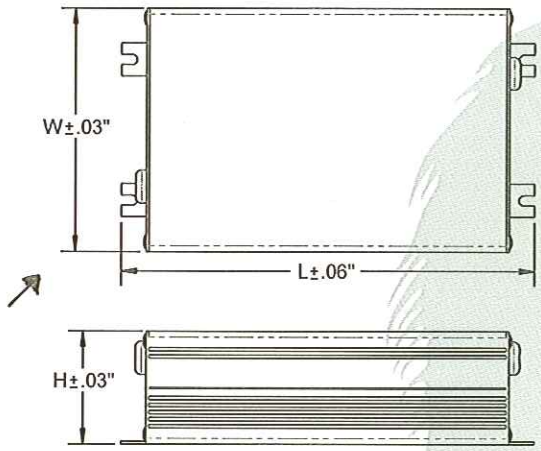

Profile Aluminum Ballast (Black)

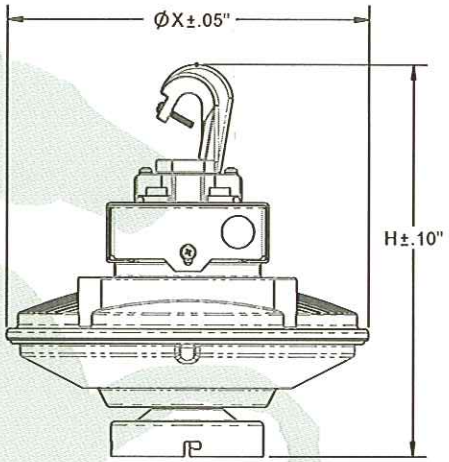

Disc Ballast (White)

PROFILE BALLAST

Model No.	SIZE	L (in)	W (in)	H (in)	Input Wire L (in)*	Output Wire L (in)*
HH-IB-UNV-BGP35	SMALL	6.00	3.68	1.59	6-12	6-12
HH-IB-UNV-BGP55	SMALL	6.00	3.68	1.59	6-12	6-12
HH-IB-UNV-BGP85	MEDIUM	7.06	4.12	1.91	6-12	6-12
HH-IB-UNV-BGP100	MEDIUM	7.06	4.12	1.91	6-12	6-12
HH-IB-UNV-BGP120	MEDIUM	7.06	4.12	1.91	6-12	6-12
HH-IB-UNV-BGP165	STANDARD	8.46	4.75	2.07	6-12	6-12
HH-IB-UNV-BGP200	STANDARD	8.46	4.75	2.07	6-12	6-12

DISC BALLAST

Model No.	SIZE	H (in)	ØX (in)	Input wire L (in)*	Output wire L (in)*
HH-IB-UNV-BGDS85	SMALL	9.52	8.04	3-6	3-4
HH-IB-UNV-BGDS100	SMALL	9.52	8.04	3-6	3-4
HH-IB-UNV-BGDS165	MEDIUM	10.30	9.60	3-6	3-4
HH-IB-UNV-BGDS200	STANDARD	10.94	11.04	3-6	3-4
HH-IB-UNV-BGDS250	STANDARD	10.94	11.04	3-6	3-4

Contact Fulham for detailed drawings.
* Subject to change. Contact Fulham for specific wire lengths.

This is an original product from Fulham, Co., Inc.

Fulham extends a limited warranty only to the original purchaser or to the first user for a period of 5 years from the date of manufacture when properly installed and operated under normal conditions of use. For complete terms and conditions, please reference the Fulham product catalog (www.fulham.com).
Due to a program of continuous improvement, Fulham reserves the right to make modifications or variations in design or construction to the equipment described.

EVERLAST® LIGHTING

Wellworth Cobra

*Protected by U.S. Patents No. D636,526; D636,518; D638,162. Additional Patents Pending

Description

- Series: ECHUS-EC
- Lamp Life Rating: 100,000 hours
- Lumen Maintenance: 70% over 100,000 hours
- Light Output: 5000K, 82-85 CRI
- IP Rating: IP65
- Applications: Freeway, highway, secondary roads
- EPA: 1.6ft²
- Warranty: 10 Year Limited

Specifications and Patent Pending Features

- Bi-Level Ballast option dims to 40% power for additional energy savings
- Specular reflector optimized for induction lamp geometry
- Integrated heat sink system for extended life
- Acrylic lens with Type III, medium throw prescription
- Full cutoff heavy duty aluminum/hybrid interior design with increased durability for harsh environments
- Excellent vibration & shock resistance
- Fixture body 80% recycled polycarbonate resin

Ordering Information

Series

ECHUS-EC — [ ] — [ ] — [ ] — [ ] — [ ] — [ ]

Wattage
- **40W**
- **55W**
- **70W**
- **80W**
- **100W**
- **120W**
- **150W**

Bi-Level
- **X**–None
- BL*

Voltage
- **120**–120-277V
- **347**–347V*
- **480**–480V*

Color Temp
- **50**–5000K
- **40**–4000K*

Photo Cell
- **TL**–Twist Lock
- **BPC**–Blank*

Mounting Hardware
- **X**–None
- EMH-CHC*
- EMH-SSM*

Bold = Standard
Grey * = Upgrade options available upon request
Blue = Bi-Level Wattage Options

Example: **ECHUS-EC**-70-**BL**-120-50-TL-X

Application Image

Call Toll Free: 888-383-7578 www.everlastlight.com

© 2012 EverLast® Lighting. All Rights Reserved. Published by EverLast® Lighting, 2021 Wellworth Avenue, Jackson, Michigan 49203.
Reproduction in part or whole of this document in any commercial uses including publication, broadcasting or redistribution in any medium without the prior written permission of the publisher is prohibited.

Dimensions

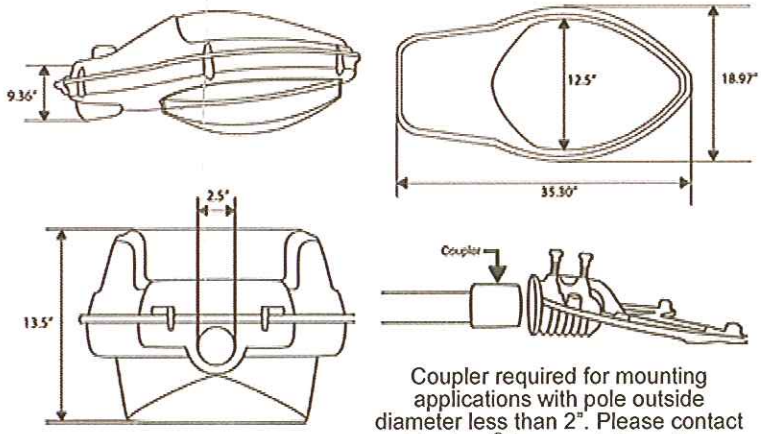

Coupler required for mounting applications with pole outside diameter less than 2". Please contact EverLast® for more information.

Photometric Data

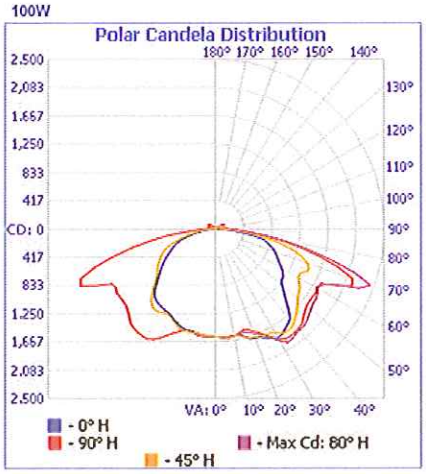

Recommended Roadway Lighting

IES Recommended Spacing	100W
Local	350'
Collector	220'
Major	140'
Expressway/Freeway A	100'
Freeway B	150'

Grid Statistics	100W
Average	0.4fc
Max	1.2fc
Min	0.1fc
Max/Min	12.0
Avg/Min	4.0

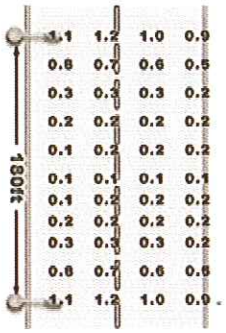

Lamp Specifications

Wattage	Lumens	L/W Ratio	CRI	CCT (KELVIN)	Rated Life
40W	3,350	84	82-85	5000	100,000 hours
55W	4,650	84	82-85	5000	100,000 hours
70W/28W	5,900/2,400	84	82-85	5000	100,000 hours
80W/32W	7,150/2,900	84	82-85	5000	100,000 hours
100W/40W	8,400/3,400	84	82-85	5000	100,000 hours
120W/48W	10,100/4,100	84	82-85	5000	100,000 hours
150W/60W	12,600/5,100	84	82-85	5000	100,000 hours

Ballast Specifications

System Wattage	Input Voltage	Input Current	Input Freq.	Power Factor	Ambient Temp	THD
44W	120-277V/480V*	0.38-0.17A / 0.10A	50/60Hz	>0.95	-40 to 130 F°	<10%
61W	120-277V/480V*	0.50-0.21A / 0.13A	50/60Hz	>0.95	-40 to 130 F°	<10%
78W/ 82.6 / 36.9 dimmed	120-277V/480V*	0.63-0.29A / 0.16A	50/60Hz	>0.95	-40 to 130 F°	<10%
90W/ 94.4 / 46.9 dimmed	120-277V/480V*	0.70-0.32A / 0.19A	50/60Hz	>0.95	-40 to 130 F°	<10%
111W/ 118.0 / 58.5 dimmed	120-277V/480V*	0.93-0.42A / 0.22A	50/60Hz	>0.95	-40 to 130 F°	<10%
134W 141.6 / 70.1 dimmed	120-277V/480V*	1.05-0.46A / 0.28A	50/60Hz	>0.95	-40 to 130 F°	<10%
165W/ 166.0 / 85.0 dimmed	120-277V/480V*	1.35-0.61A / 0.35A	50/60Hz	>0.95	-40 to 130 F°	<10%

*Legal Notice: Full Spectrum Solutions owns proprietary rights in the EverLast® Series of fixtures in the form of U.S. Patents No. D636,526; D636,518; D638,162 Additional Patents Pending.

Call Toll Free: 888-383-7578 www.everlastlight.com

© 2012 EverLast® Lighting. All Rights Reserved. Published by EverLast® Lighting, 2021 Wellworth Avenue, Jackson, Michigan 49203.
Reproduction in part or whole of this document in any commercial uses including publication, broadcasting or redistribution in any medium without the prior written permission of the publisher is prohibited.

ECM 4 - Building 4 Noise Abatement Energy Services

Energy Cost Budget / PRM Summary

By MACDONALD-MILLER

Project Name: Building 4 Renovation	Date: June 28, 2012
City: Des Mones, WA	Weather Data: SEATTLE 8760

Note: The percentage displayed for the "Proposed/ Base %" column of the base case is actually the percentage of the total energy consumption.

* Denotes the base alternative for the ECB study.

		* Alt-1 Renovated Building			Alt-2 Existing Building		
		Energy 10^6 Btu/yr	Proposed / Base %	Peak kBtuh	Energy 10^6 Btu/yr	Proposed / Base %	Peak kBtuh
Lighting - Conditioned	Electricity	168.7	37	60	212.6	126	76
Space Heating	Electricity	178.4	39	261	28.4	16	4
	Gas	0.0	0	0	1,471.7	0	870
Space Cooling	Electricity	16.4	4	13	0.0	0	0
Pumps	Electricity	0.0	0	0	63.1	0	9
Heat Rejection	Electricity	9.2	2	8	0.0	0	0
Fans - Conditioned	Electricity	24.3	5	20	77.6	319	19
Receptacles - Conditioned	Electricity	32.2	7	11	32.2	100	11
Stand-alone Base Utilities	Electricity	26.6	6	10	26.6	100	10
Total Building Consumption		**455.8**			**1,912.3**		

		* Alt-1 Renovated Building	Alt-2 Existing Building
Total	**Number of hours heating load not met**	56	73
	Number of hours cooling load not met	0	0

	* Alt-1 Renovated Building		Alt-2 Existing Building	
	Energy 10^6 Btu/yr	Cost/yr $/yr	Energy 10^6 Btu/yr	Cost/yr $/yr
Electricity	455.8	0	440.6	0
Gas	0.0	0	1,471.7	0
Total	**456**	**0**	**1,912**	**0**

Entered Values

TRACE® 700 version 6.2.8

By MACDONALD-MILLER

Project Name:	Building 4 Renovation
Dataset Name:	C:\Users\Public\Documents\Trane\TRACE 700\Projects\HCC BLDG 4_NRG.TRC
Location:	Des Mones, WA
Building Owner:	Highline Community College
Program User:	Jared Sheeks
Company:	MacDonald-Miller Facility Solutions
Comments:	

Cooling Design Period:	January thru December
Peak Hour Override:	0
Daylight Savings Period:	
Summer Period:	
Cooling Methodology:	CLTD-CLF (ASHRAE TFM)
Heating Methodology:	UATD
Infiltration Methodology:	Vary with wind speed
Outside Film Methodology:	Vary with wind speed
Terrain Methodology:	Center of a large city
Room Circ Rate:	Medium
Wall Load To Plenum:	YES
Building Orientation:	0 degrees from north
Simulation Hours:	Full year
Calendar Code:	Standard (1978)
Energy Simulation Period:	January thru December

Location:	SEATTLE 8760	
Summer Design Dry Bulb:	83.00	°F
Summer Design Wet Bulb:	65.00	°F
Winter Design Dry Bulb:	24.00	°F
Summer Clearness Number:	0.92	
Winter Clearness Number:	0.87	
Summer Ground Reflectance:	0.20	
Winter Ground Reflectance:	0.20	
Carbon Dioxide Level:	400	ppm
Force VAV Min => Nominal Ventilation at Design:	No	
Allow Energy Recovery/Transfer at Design:	Yes	
Retest Design Peaks:	Yes	
Calculate Building Block Loads:	No	

EQUIPMENT ENERGY CONSUMPTION

By MACDONALD-MILLER

Alternative: 1 Renovated Building

Equipment - Utility	Jan	Feb	Mar	Apr	May	June	July	Aug	Sept	Oct	Nov	Dec	Total
	------- Monthly Consumption -------												
Lights													
Electric (kWh)	4,114.7	3,725.3	4,437.3	3,940.4	4,276.0	4,253.8	3,962.6	4,437.3	3,940.4	4,276.0	4,092.4	3,962.6	49,418.7
Peak (kW)	17.6	17.6	17.6	17.6	17.6	17.6	17.6	17.6	17.6	17.6	17.6	17.6	17.6
Misc. Ld													
Electric (kWh)	786.7	712.3	848.4	753.4	817.6	813.3	757.7	848.4	753.4	817.6	782.5	757.7	9,449.1
Peak (kW)	3.4	3.4	3.4	3.4	3.4	3.4	3.4	3.4	3.4	3.4	3.4	3.4	3.4
Cooling Coil Condensate													
Recoverable Water (1000gal)	0.0	0.0	0.0	0.0	0.0	0.1	0.4	0.2	0.1	0.0	0.0	0.0	0.9
Peak (1000gal/Hr)	0.0	0.0	0.0	0.0	0.0	0.0	0.0	0.0	0.0	0.0	0.0	0.0	0.0
Bsu 1: Domestic Hot Water - Electric													
Electric (kWh)	649.0	589.6	691.4	629.3	670.2	664.5	634.9	691.4	629.3	670.2	643.3	634.9	7,797.7
Peak (kW)	2.9	2.9	2.9	2.9	2.9	2.9	2.9	2.9	2.9	2.9	2.9	2.9	2.9
Cpl 1: OHP-1 VRF [Sum of dsn coil capacities=36.02 tons]													
VRF Indoor Units [Clg Nominal Capacity/F.L.Rate=36.02 tons / 39.08 kW] (Cooling Equipment - Cooling Mode)													
Electric (kWh)	0.0	0.0	3.2	16.0	428.1	656.5	1,918.1	1,426.6	322.0	31.6	0.0	0.0	4,802.1
Peak (kW)	0.0	0.0	1.2	2.3	28.2	26.0	34.1	27.0	23.1	2.6	0.0	0.0	34.1
VRF Indoor Units [Htg Nominal Capacity/F.L.Rate=410.6 mbh / 43.90 kW] (Cooling Equipment - Heating Mode)													
Electric (kWh)	10,248.5	7,368.3	7,086.0	3,963.1	1,969.7	215.2	84.9	0.0	640.7	3,361.7	6,610.9	10,143.6	51,692.6
Peak (kW)	43.9	43.9	43.9	43.9	39.5	23.5	26.2	0.0	30.8	43.9	43.9	43.9	43.9
VRF Indoor Units (Cooling Equipment - Heat Recovered From Condenser Loop)													
Heat Recovered (therms)	0.0	0.0	0.1	0.1	1.7	4.1	1.1	0.0	2.9	0.1	0.0	0.0	10.1
Peak (therms/Hr)	0.0	0.0	0.0	0.0	0.6	0.4	0.1	0.0	0.4	0.0	0.0	0.0	0.6
VRV Condensing Unit [Design Heat Rejection/F.L.Rate=47.13 tons / 2.31 kW]													
Electric (kWh)	0.0	0.0	16.2	30.0	261.0	547.3	690.5	755.2	327.9	73.9	0.0	0.0	2,702.1
Peak (kW)	0.0	0.0	2.3	2.3	2.3	2.3	2.3	2.3	2.3	2.3	0.0	0.0	2.3
Hpl 1: Electric Heat [Sum of dsn coil capacities=565.7 mbh]													
Electric Resistance Heaters [Nominal Capacity/F.L.Rate=565.7 mbh / 165.8 kW] (Heating Equipment)													
Electric (kWh)	155.7	66.7	63.5	15.5	0.0	0.0	0.0	0.0	0.0	15.5	42.0	207.5	566.4
Peak (kW)	18.9	13.7	11.8	8.2	0.0	0.0	0.0	0.0	0.0	6.9	11.2	36.2	36.2
Sys 1: VRF													

EQUIPMENT ENERGY CONSUMPTION

By MACDONALD-MILLER

Alternative: 1 Renovated Building

Equipment - Utility	Jan	Feb	Mar	Apr	May	June	July	Aug	Sept	Oct	Nov	Dec	Total
	------- Monthly Consumption -------												
Sys 1: VRF													
FC Centrifugal const vol [DsnAirflow/F.L.Rate=8,413 cfm / 2.52 kW] (Main Clg Fan)													
Electric (kWh)	503.1	355.7	343.0	193.7	166.5	137.6	209.4	195.6	106.3	193.4	322.3	491.1	3,217.5
Peak (kW)	2.5	2.5	2.5	2.3	2.5	1.8	2.5	2.5	2.0	2.4	2.5	2.5	2.5
FC Centrifugal const vol [DsnAirflow/F.L.Rate=2,793 cfm / 0.93 kW] (Opt. Ventilation Fan)													
Electric (kWh)	127.9	103.0	115.4	85.5	99.3	104.8	121.4	136.3	86.5	91.5	104.6	127.0	1,303.1
Peak (kW)	0.9	0.9	0.9	0.8	0.9	0.8	0.9	0.9	0.9	0.8	0.9	0.9	0.9
Sys 2: FCU-1													
AF Centrifugal var freq drv [DsnAirflow/F.L.Rate=4,010 cfm / 1.20 kW] (Main Clg Fan)													
Electric (kWh)	227.9	179.0	194.1	142.0	125.0	102.0	110.7	107.1	96.1	142.8	175.7	226.0	1,828.4
Peak (kW)	1.2	1.2	1.2	1.2	1.2	1.2	1.2	1.2	0.9	1.2	1.2	1.2	1.2
AF Centrifugal var freq drv [DsnAirflow/F.L.Rate=4,010 cfm / 1.34 kW] (System Exhaust Fan)													
Electric (kWh)	58.5	52.3	63.7	55.8	70.3	73.1	88.2	82.3	62.5	57.3	57.5	61.1	782.6
Peak (kW)	0.2	0.2	0.2	0.2	1.3	1.3	1.3	1.3	0.6	0.2	0.2	0.2	1.3

EQUIPMENT ENERGY CONSUMPTION

By MACDONALD-MILLER

Alternative: 2 Existing Building

Equipment - Utility		Jan	Feb	Mar	Apr	May	June	July	Aug	Sept	Oct	Nov	Dec	Total
		------- Monthly Consumption -------												
Lights														
	Electric (kWh)	5,187.3	4,696.4	5,594.1	4,967.6	5,390.7	5,362.7	4,995.7	5,594.1	4,967.6	5,390.7	5,159.3	4,995.7	62,301.8
	Peak (kW)	22.2	22.2	22.2	22.2	22.2	22.2	22.2	22.2	22.2	22.2	22.2	22.2	22.2
Misc. Ld														
	Electric (kWh)	786.7	712.3	848.4	753.4	817.6	813.3	757.7	848.4	753.4	817.6	782.5	757.7	9,449.1
	Peak (kW)	3.4	3.4	3.4	3.4	3.4	3.4	3.4	3.4	3.4	3.4	3.4	3.4	3.4
Bsu 1: Domestic Hot Water - Electric														
	Electric (kWh)	649.0	589.6	691.4	629.3	670.2	664.5	634.9	691.4	629.3	670.2	643.3	634.9	7,797.7
	Peak (kW)	2.9	2.9	2.9	2.9	2.9	2.9	2.9	2.9	2.9	2.9	2.9	2.9	2.9
Cpl 1: Cooling plant - 001 [Sum of dsn coil capacities=0 tons]														
Hpl 1: Distric Heating Plant [Sum of dsn coil capacities=728.5 mbh]														
Central Plant [Nominal Capacity/F.L.Rate=728.5 mbh / 9.71 Therms] (Heating Equipment)														
	Gas (therms)	2,643.0	1,908.2	1,869.9	1,103.9	562.1	255.6	149.4	561.3	386.4	982.7	1,698.0	2,596.8	14,717.3
	Peak (therms/Hr)	8.6	8.3	8.1	8.0	7.5	6.5	6.3	1.5	7.1	8.0	8.0	8.7	8.7
Heating water circ pump (Misc Accessory Equipment)														
	Electric (kWh)	1,680.2	1,453.5	1,606.5	1,453.5	1,366.0	1,431.6	1,327.8	2,032.7	1,461.7	1,423.4	1,505.4	1,743.1	18,485.1
	Peak (kW)	2.7	2.7	2.7	2.7	2.7	2.7	2.7	2.7	2.7	2.7	2.7	2.7	2.7
Boiler forced draft fan (Misc Accessory Equipment)														
	Electric (kWh)	448.1	387.6	428.4	387.6	364.3	381.8	354.1	542.0	389.8	379.6	401.4	464.8	4,929.4
	Peak (kW)	0.7	0.7	0.7	0.7	0.7	0.7	0.7	0.7	0.7	0.7	0.7	0.7	0.7
Cntl panel & interlocks - 0.5 KW (Misc Accessory Equipment)														
	Electric (kWh)	307.5	266.0	294.0	266.0	250.0	262.0	243.0	372.0	267.5	260.5	275.5	319.0	3,383.0
	Peak (kW)	0.5	0.5	0.5	0.5	0.5	0.5	0.5	0.5	0.5	0.5	0.5	0.5	0.5
Sys 1: Multizone Unit														
FC Centrifugal const vol [DsnAirflow/F.L.Rate=6,780 cfm / 3.77 kW] (Main Clg Fan)														
	Electric (kWh)	1,767.0	1,498.6	1,684.1	1,470.3	1,473.9	1,533.8	1,826.3	2,802.8	1,461.9	1,470.7	1,652.5	1,705.4	20,347.3
	Peak (kW)	3.8	3.8	3.8	3.8	3.8	3.8	3.8	3.8	3.8	3.8	3.8	3.8	3.8
Sys 2: Unit Heaters														

EQUIPMENT ENERGY CONSUMPTION

By MACDONALD-MILLER

Alternative: 2 Existing Building

Equipment - Utility	Jan	Feb	Mar	Apr	May	June	July	Aug	Sept	Oct	Nov	Dec	Total
	------- Monthly Consumption -------												
Sys 2: Unit Heaters													
FC Centrifugal const vol [DsnAirflow/F.L.Rate=5,635 cfm / 1.69 kW] (Main Htg Fan)													
Electric (kWh)	478.5	344.4	333.9	190.9	84.2	9.9	2.8	0.0	28.9	158.8	299.4	468.0	2,399.8
Peak (kW)	1.7	1.7	1.7	1.7	1.7	1.5	1.2	0.0	1.6	1.7	1.7	1.7	1.7

ENTERED VALUES
PLANTS

By MACDONALD-MILLER

Cooling Plant: OHP-1 VRF

Sizing method: Peak
Heat rejection type: None
Secondary distribution pump: None
Secondary pump consumption: 0 Ft Water
Thermal storage type: None
Thermal storage capacity: 0 ton-hr
Thermal storage schedule: Off (0%)

Geothermal Loop

TLoop Ent Bldg:	None	Flow scheme:	Fully mixed
TLoop schedule:	None	Loop fluid glycol:	0%
Flow rate:	100.00% of condenser flow rate	Heat exchanger approach:	0°F
Loop pump	None		
Pump F.L. rate:	0.00ft water		

Equipment tag: VRF Indoor Units — Cooling Type: VRF heat recovery - MM standard — OHP-1 VRF

Operating Mode	Capacity	Energy Rate
Cooling:		3.2400 COP (compressor only)
Heat recovery:	11.4 Mbh/ton	2.7400 COP (compressor only)
Tank charging:		
Tank charging & heat recovery:		

Pumps	Type
Chilled water:	None
Condenser water:	None
Heat recovery or aux cond:	None
Free cooling:	None

Full Load Consumption

Heat Rejection and Thermal Storage

Heat rejection type: VRV Condensing Unit
Thermal storage type: None
T-storage capacity: 0 ton-hr
T-storage schedule: Storage

Equipment Options

Sequencing type: Single
Demand lim priority:
Dsn chilled water delta T: 10 °F
Dsn cond water delta T: 10 °F

Free clg type: None
Fluid cooler type:
Load shed econ: no
Evap precooling: no
Hot gas reheat No

Energy source: Electric Heat
Reject cond heat: Heating plant
Cond. heat to plant: Electric Heat
Equip schedule: Available (100%)

Reset Based On	Reset Curve	Max Reset TD
Chilled Water: None	None	10,000°F
Condenser Water: None	None	0°F

Heating Plant: Electric Heat

Sizing method: Peak
Cogeneration type: None
Secondary distribution pump: None
Thermal storage type: None
Thermal storage capacity: 0 ton-hr

Equipment tag: Electric Resistance Heaters — Heating Type: Electric Resistance Heat — Electric Heat

Heating capacity:
Energy rate: 100.00 % Effic.

Thermal storage type: None
Thermal storage capacity: 0 ton-hr
Thermal storage schedule: Storage

Hot water pump type: None
Hot water pump cons: 0.00 Ft Water

Equipment schedule: Available (100%)
Demand limiting priority:

Base Utilities

Plant assigned to: Stand-alone
Type: Domestic Hot Water - Electric

Description: Domestic Hot Water - Electric
Demand limiting priority:

Schedule: Hot Water - WSEC RS29 Office
Hourly demand: 5.00 kW

Miscellaneous accessories

Plant assigned to: OHP-1 VRF
Equipment tag: All

Type: None
Description:

Schedule: Off (0%)
Energy: 0.00 kW

ENTERED VALUES
PLANTS

By MACDONALD-MILLER

Cooling Plant: Cooling plant - 001

Sizing method: Peak
Heat rejection type: None
Secondary distribution pump: None
Secondary pump consumption: 0 Ft Water
Thermal storage type: None
Thermal storage capacity: 0 ton-hr
Thermal storage schedule: Off (0%)

Geothermal Loop

TLoop Ent Bldg:	None	Flow scheme:	Fully mixed
TLoop schedule:	None	Loop fluid glycol:	0%
Flow rate:	100.00% of condenser flow rate	Heat exchanger approach:	0°F
Loop pump	None		
Pump F.L. rate:	0.00ft water		

Equipment tag: Air-cooled chiller - 001 — Cooling Type: Default air-cooled chiller — Cooling plant - 001

Operating Mode	Capacity	Energy Rate
Cooling:		1.1089 kW/ton
Heat recovery:		
Tank charging:		
Tank charging & heat recovery:		

Pumps	Type	Full Load Consumption
Chilled water:	Cnst vol chill water pump	0.00 Ft Water
Condenser water:	None	
Heat recovery or aux cond:	None	
Free cooling:	None	

Heat Rejection and Thermal Storage

Heat rejection type: MZ packaged rooftop cond fan
Thermal storage type: None
T-storage capacity: 0 ton-hr
T-storage schedule: Storage

Equipment Options

Sequencing type: Single
Demand lim priority:
Dsn chilled water delta T: 10 °F
Dsn cond water delta T: 10 °F

Free clg type: None
Fluid cooler type: None
Load shed econ: no
Evap precooling: no
Hot gas reheat No

Energy source:
Reject cond heat: Heat Reject.Equip
Cond. heat to plant:
Equip schedule: Available (100%)

Reset Based On	Reset Curve	Max Reset TD
Chilled Water: None	None	0°F
Condenser Water: None	None	0°F

Heating Plant: Distric Heating Plant

Sizing method: Peak
Cogeneration type: None
Secondary distribution pump: None
Thermal storage type: None
Thermal storage capacity: 0 ton-hr

Equipment tag: Central Plant — Heating Type: Default Boiler — Distric Heating Plant

Heating capacity:
Energy rate: 75.00 % Effic.

Thermal storage type: None
Thermal storage capacity: 0 ton-hr
Thermal storage schedule: Storage

Hot water pump type: Heating water circ pump
Hot water pump cons: 0.05 kW/ton

Equipment schedule: Available (100%)
Demand limiting priority:

Base Utilities

Plant assigned to: Stand-alone
Type: Domestic Hot Water - Electric

Description: Domestic Hot Water - Electric
Demand limiting priority:

Schedule: Hot Water - WSEC RS29 Office
Hourly demand: 5.00 kW

Miscellaneous accessories

Plant assigned to: Cooling plant - 001
Equipment tag: All

Type: None
Description:

Schedule: Off (0%)
Energy: 0.00 kW

SYSTEM ENTERED VALUES

By MACDONALD-MILLER

VRF - Variable Refrigerant Volume

Design Air Conditions

	Max	Min				
Cooling supply:	52.0 °F	52.0 °F	Supply duct temperature diff:	0.0 °F	Design humidity ratio diff:	
Leaving cooling coil:			Reheat Temperature diff:	0.0 °F	Min room relative humidity:	
Heating supply:						

Optional Ventilation

Configuration:	Cool / Heat	Cooling SADB:	100 °F	Cooling SADB hi limit:		Cooling schedule:	Available (100%)
Control method:	Fixed Setpoints	Heating SADB:	55 °F	Cooling SADB low limit:		Heating schedule:	Available (100%)
Deck location:	Return/Outdoor Deck	Cooling SADP:		Cooling SADP hi limit:			
Level location:				Cooling SADP low limit:			

Advanced Options

Cooling coil sizing method:	Block	Supply fan motor location:	Supply	Night purge schedule:	Off (0%)
Cooling coil location:	Room	Return fan motor location:	Return	Optimum start schedule:	Available (100%)
Block cooling airflow:		Supply fan cofiguration:	Blow Thru	Optimum stop schedule:	Off (0%)
Ventilation deck location:	Return/Outdoor Deck	Supply fan sizing:	Peak		
Supply duct location:	Return Air	Fan mechanical efficiency :	100%	CO2-based DCV:	None
Return air path:	PLENUM	Apply Std62 People Avg:	No		
		Std62 Max Vent (Z) Ratio:		System ventilation flag:	Sum Room OA Reqs

Reset per worst case room schedule:	Off (0%)	Supply air path / duct location:	Return Air
Max reset:		Space convective gains to occupied layer:	
Use system default outside air reset:	Yes	Underfloor plenum height:	0.0 ft
		Conductive resistance of raised floor:	0.8 hr·ft²·°F/Btu
		Upstream nominal leakage fraction:	0 %
		Downstream constant leakage fraction:	0 %
		Aux cooling coil losses to plenum:	0 %

	Control Method	Control Type
Auxiliary cooling coil	Activate After Primary System	None
Auxiliary heating coil	Activate After Primary System	None
Auxiliary fan	No Fan	

Coils

	Capacity	Schedule		
Main cooling:	115.0 % of Design Capacity by adjusting a	Available (100%)	People	100%
Aux cooling:		Available (100%)	Lights	100%
Main heating:	125.0 % of Design Capacity	Available (100%)	Misc loads	100%
Aux heating:		Available (100%)		
Preheat:	100.0% of Design Capacity	Available (100%)		
Reheat:	100.0 % of Design Capacity	Available (100%)		
Humidification:	100.0 % of Design Capacity	Available (100%)		

Fans

	Type	Static Press.	Full Load Energy Rate	Schedule	Efficiency	Demand Limiting Priority
Primary	FC Centrifugal const vol	0.0 in. wg	0.00030 kW/Cfm	Available (100%)	100	
Secondary	None	0.0 in. wg	0.00000 kW	Available (100%)	85	
Return	None	0.0 in. wg	0.00000 kW	Available (100%)	90	
System Exhaust	None	0.0 in. wg	0.00000 kW	Available (100%)	90	
Room Exhaust	None	0.0 in. wg	0.00000 kW	Available (100%)	85	
Optional ventilation	FC Centrifugal const vol	0.0 in. wg	0.00030 kW/Cfm	Available (100%)	90	
Auxiliary	None	0.0 in. wg	0.00000 kW	Available (100%)	85	
	LEED Fan Power Adjustment	0.0 in. wg				

SYSTEM ENTERED VALUES

By MACDONALD-MILLER

FCU-1 - Single Zone Variable Air Volume

Design Air Conditions

	Max	Min				
Cooling supply:	52.0 °F	52.0 °F	Supply duct temperature diff:	0.0 °F	Design humidity ratio diff:	
Leaving cooling coil:			Reheat Temperature diff:	0.0 °F	Min room relative humidity:	
Heating supply:						

Economizer

Type: Dry Bulb	"On" Point: 75 °F	Max Percent OA: 100%	Schedule: Available (100%)

Evaporative Cooling

Type: None	Direct efficiency:	0%	Available (100%)	Indirect efficiency:	0% Available (100%)

Advanced Options

Cooling coil sizing method:	Block	Supply fan motor location:	Supply	Night purge schedule:	Off (0%)
Cooling coil location:	System	Return fan motor location:	Return	Optimum start schedule:	Available (100%)
Block cooling airflow:		Supply fan cofiguration:	Draw Thru	Optimum stop schedule:	Off (0%)
Ventilation deck location:	Return/Outdoor Deck	Supply fan sizing:	Peak		
Supply duct location:	Return Air	Fan mechanical efficiency :	100%	CO2-based DCV:	None
Return air path:	PLENUM	Apply Std62 People Avg:	No		
		Std62 Max Vent (Z) Ratio:		System ventilation flag:	Sum Room OA Reqs

Reset per worst case room schedule:	Off (0%)		Supply air path / duct location:	Return Air
Max reset:			Space convective gains to occupied layer:	
Use system default outside air reset:	Yes		Underfloor plenum height:	0.0 ft
			Conductive resistance of raised floor:	0.8 hr·ft²·°F/Btu
			Upstream nominal leakage fraction:	0 %
			Downstream constant leakage fraction:	0 %
	Control Method	Control Type	Aux cooling coil losses to plenum:	0 %
Auxiliary cooling coil	Activate After Primary System	None		
Auxiliary heating coil	Activate After Primary System	None		
Auxiliary fan	No Fan			

Coils

	Capacity	Schedule	Diversity	
Main cooling:	115.0 % of Design Capacity by adjusting a	Available (100%)	People	100%
Aux cooling:		Available (100%)	Lights	100%
Main heating:	125.0 % of Design Capacity	Available (100%)	Misc loads	100%
Aux heating:		Available (100%)		
Preheat:	100.0% of Design Capacity	Available (100%)		
Reheat:	100.0 % of Design Capacity	Available (100%)		
Humidification:	100.0 % of Design Capacity	Available (100%)		

Fans

	Type	Static Press.	Full Load Energy Rate	Schedule	Efficiency	Demand Limiting Priority
Primary	AF Centrifugal var freq drv	0.0 in. wg	0.00030 kW/Cfm	Available (100%)	100	
Secondary	None	0.0 in. wg	0.00000 kW	Available (100%)	85	
Return	None	0.0 in. wg	0.00000 kW	Available (100%)	90	
System Exhaust	AF Centrifugal var freq drv	0.0 in. wg	0.00030 kW/Cfm	Available (100%)	90	
Room Exhaust	None	0.0 in. wg	0.00000 kW	Available (100%)	85	
Optional ventilation	None	0.0 in. wg	0.00000 kW	Available (100%)	90	
Auxiliary	None	0.0 in. wg	0.00000 kW	Available (100%)	85	
	LEED Fan Power Adjustment	0.0 in. wg				

SYSTEM ENTERED VALUES

By MACDONALD-MILLER

Multizone Unit - Double Deck Multizone

Design Air Conditions

	Max	Min				
Cooling supply:			Supply duct temperature diff:	0.0 °F	Design humidity ratio diff:	
Leaving cooling coil:			Reheat Temperature diff:	0.0 °F	Min room relative humidity:	
Heating supply:	110.0 °F	110.0 °F				

Economizer

Type: Dry Bulb	"On" Point: 75 °F	Max Percent OA: 100%	Schedule: Available (100%)

Evaporative Cooling

Type: None	Direct efficiency:	0%	Available (100%)	Indirect efficiency: 0% Available (100%)

Advanced Options

Cooling coil sizing method:	Block	Supply fan motor location:	Supply	Night purge schedule:	Off (0%)
Cooling coil location:	System	Return fan motor location:	Return	Optimum start schedule:	Available (100%)
Block cooling airflow:		Supply fan cofiguration:	Draw Thru	Optimum stop schedule:	Off (0%)
Ventilation deck location:	Return/Outdoor Deck	Supply fan sizing:	Peak		
Supply duct location:	Return Air	Fan mechanical efficiency :	75%	CO2-based DCV:	None
Return air path:	PLENUM	Apply Std62 People Avg:	No		
		Std62 Max Vent (Z) Ratio:		System ventilation flag:	Sum Room OA Reqs

Reset per worst case room schedule:	Off (0%)		Supply air path / duct location:	Return Air
Max reset:			Space convective gains to occupied layer:	
Use system default outside air reset:	Yes		Underfloor plenum height:	0.0 ft
			Conductive resistance of raised floor:	0.8 hr·ft²·°F/Btu
			Upstream nominal leakage fraction:	0 %
			Downstream constant leakage fraction:	0 %
	Control Method	Control Type	Aux cooling coil losses to plenum:	0 %
Auxiliary cooling coil	Activate After Primary System	None		
Auxiliary heating coil	Activate After Primary System	None		
Auxiliary fan	No Fan			

Coils

	Capacity	Schedule	Diversity	
Main cooling:	0.0 % of Design Capacity by adjusting airfl	Available (100%)	People	100%
Aux cooling:		Available (100%)	Lights	100%
Main heating:	125.0 % of Design Capacity	Available (100%)	Misc loads	100%
Aux heating:		Available (100%)		
Preheat:	100.0% of Design Capacity	Available (100%)		
Reheat:	100.0 % of Design Capacity	Available (100%)		
Humidification:	100.0 % of Design Capacity	Available (100%)		

Fans

	Type	Static Press.	Full Load Energy Rate	Schedule	Efficiency	Demand Limiting Priority
Primary	FC Centrifugal const vol	0.0 in. wg	0.00050 kW/Cfm	Available (100%)	90	
Secondary	None	0.0 in. wg	0.00000 kW	Available (100%)	85	
Return	None	0.0 in. wg	0.00000 kW	Available (100%)	90	
System Exhaust	None	0.0 in. wg	0.00000 kW	Available (100%)	90	
Room Exhaust	None	0.0 in. wg	0.00000 kW	Available (100%)	85	
Optional ventilation	None	0.0 in. wg	0.00000 kW	Available (100%)	90	
Auxiliary	None	0.0 in. wg	0.00000 kW	Available (100%)	85	
	LEED Fan Power Adjustment	0.0 in. wg				

SYSTEM ENTERED VALUES

By MACDONALD-MILLER

Unit Heaters - Unit Heaters

Design Air Conditions

	Max	Min
Cooling supply:		
Leaving cooling coil:		
Heating supply:	120.0 °F	120.0 °F

Supply duct temperature diff: 0.0 °F
Reheat Temperature diff: 0.0 °F
Design humidity ratio diff:
Min room relative humidity:

Advanced Options

Cooling coil sizing method: No Coil
Cooling coil location: Room
Block cooling airflow:
Ventilation deck location: Return/Outdoor Deck
Supply duct location: Return Air
Return air path: ROOMDK

Supply fan motor location: Supply
Return fan motor location: Return
Supply fan cofiguration: Blow Thru
Supply fan sizing: No Fan
Fan mechanical efficiency : 100%
Apply Std62 People Avg: No
Std62 Max Vent (Z) Ratio:

Night purge schedule: Off (0%)
Optimum start schedule: Available (100%)
Optimum stop schedule: Off (0%)
CO2-based DCV: None
System ventilation flag: Sum Room OA Reqs

Reset per worst case room schedule: Off (0%)
Max reset:
Use system default outside air reset: Yes

Supply air path / duct location: Return Air
Space convective gains to occupied layer:
Underfloor plenum height: 0.0 ft
Conductive resistance of raised floor: 0.8 hr·ft²·°F/Btu
Upstream nominal leakage fraction: 0 %
Downstream constant leakage fraction: 0 %
Aux cooling coil losses to plenum: 0 %

	Control Method	Control Type
Auxiliary cooling coil	Activate After Primary System	None
Auxiliary heating coil	Activate After Primary System	None
Auxiliary fan	No Fan	

Coils

	Capacity	Schedule
Main cooling:	0.0 % of Design Capacity by adjusting airfl	Available (100%)
Aux cooling:		Available (100%)
Main heating:	125.0 % of Design Capacity	Available (100%)
Aux heating:		Available (100%)
Preheat:	100.0% of Design Capacity	Available (100%)
Reheat:	100.0 % of Design Capacity	Available (100%)
Humidification:	100.0 % of Design Capacity	Available (100%)

Diversity	
People	100%
Lights	100%
Misc loads	100%

Fans

	Type	Static Press.	Full Load Energy Rate	Schedule	Efficiency	Demand Limiting Priority
Primary	None	0.0 in. wg	0.00000 kW	Available (100%)	90	
Secondary	FC Centrifugal const vol	0.0 in. wg	0.00030 kW/Cfm	Available (100%)	100	
Return	None	0.0 in. wg	0.00000 kW	Available (100%)	90	
System Exhaust	None	0.0 in. wg	0.00000 kW	Available (100%)	90	
Room Exhaust	None	0.0 in. wg	0.00000 kW	Available (100%)	85	
Optional ventilation	None	0.0 in. wg	0.00000 kW	Available (100%)	90	
Auxiliary	None	0.0 in. wg	0.00000 kW	Available (100%)	85	
	LEED Fan Power Adjustment	0.0 in. wg				

APPENDIX IV

Utility Incentive Letter

PSE Energy Efficiency Custom Grant Project Data Submittal Form

PSE Account Holder's Name:	Highline Community College
Project Sites/Buildings	**PSE Grant Estimates ($)** [1]
Highline community College	$ 45,704
Site 2	$ -
Site 3	$ -
Site 4	$ -
Site 5	$ -
Site 6	$ -
Site 7	$ -
Site 8	$ -
Site 9	$ -
Site 10	$ -
Total	**$ 45,704**

Notes

1. This is only a funding estimate and not a commitment of funds by PSE. This estimate is based upon the scope, costs, and savings provided and is subject to change if final scope, costs, or savings change in anyway. A formal project review by PSE and grant agreement will be necessary prior to any formal commitment of funds.

RYAN LAMBERT
7/2/2012
PSE EME
PH: 425-456-2502
EMAIL: RYAN.LAMBERT@PSE.COM

PSE Energy Efficiency Custom Grant Project Data Submittal Form

IMPORTANT - DO NOT DELETE ROWS

Name of Account Holder :	Highline Community College	Electric Meter ID:	
Name of School [1] :	Highline community College	Gas Meter ID:	
Service Address:	2400 S 240th St DesMoines, WA 98198	PSE Account Number:	587-442-100-0

Measure Types	Cells below to be completed by customer					For PSE Representative Use Only	ECM Descriptions
	Measure Cost ($) [2]	Baseline Usage (kWh/yr)	Baseline Usage (Therms/yr)	Proposed savings (kWh/yr)	Proposed savings (Therms/yr)	PSE Grant Estimate ($) [3]	
Packaged HVAC Equip Replacement							
Gas Water Heater Replacement							
Const. Volume Fan to Variable Volume Fan Retrofit (VFD or similar)							
Const. Volume Pumping to Variable Volume Pumping Retrofit (VFD or similar)							
Boiler retrofit							
Extensive Controls Retrofit (including front end upgrade)							
Adding controls features to existing DDC (i.e. DCV, fan VFD)							
Lighting Retrofit	$ 245,240.47	433,369		228,518		$ 45,704	Replace existing HPS and MH exterior building wall packs and canopy lighting with energy efficient LED fixtures. Retrofit parking lot and walkway HPS and MH lights with energy efficient induction lamps. 4200hrs/yr runtime.
Insulation Improvement							
Windows Retrofit							
---Others Measures							
Total	$ 245,240	433368.6	0	228517.8	0	45704	

Notes
1. Use one application per PSE account (typically per building or site).
2. Measure cost shall only include material costs, labor costs and local sales tax.
3. This is only a funding estimate and not a commitment of funds by PSE. This estimate is based upon the scope, costs, and savings provided and is subject to change if final scope, costs, or savings change in anyway. A formal project review by PSE and grant agreement will be necessary prior to any formal commitment of funds.

Contractor Name:	MacDonald Miller Facility Solutions / John Van Hersett - 206-768-4250	Date:	
PSE Representative Name:	Ryan Lambert	Date:	7/2/2012

Appendix #4

Team Resumes

Additional Information on Request

©Copyright 2013, MacDonald-Miller Facility Solutions

Ed has over 22 years experience in the electrical industry. As a service manager he has been involved in sales, estimating, project management and billing of projects in four different states.

Ed Adams

Electrical Sales, Estimating & Project Management

Areas of expertise include:

- Hospitals and Health Care Facilities
- High and Low Rise Office Buildings
- Public and Private Education Facilities
- Multi-Family and Condominiums
- Industrial and Production Facilities
- Project Management
- Estimating

Project Experience:

- Overlake Hospital Birthing Center, Bellevue – Fire Alarm System
- Group Health Hospital, Seattle – Patient rooms and Chiller Systems
- University of Washington, Seattle – Library, Classrooms and Resident Housing
- Seattle Central Community College, Seattle – Library and Classrooms
- Lake Washington Technical College, Kirkland – West Addition and Maintenance
- Mercer Island School District, Mercer Island – Junior High Complete Remodel
- Boeing Corporation, Seattle – 38-01 Building Construction
- Boeing Corporation, Auburn – Numerous Projects
- 7-Eleven Corporation, Kent – Lighting and Maintenance Projects in three states
- Home Base, Inc. Irvine – Multiple Projects around the State of Washington
- Factoria Mall, Bellevue – Lighting and Fire Alarm Systems through-out
- Seattle-Tacoma International Airport, Seatac – Lighting and Signage through-out
- University of Washington Bothell Campus, Bothell – Lighting, Tenant Improvement and Maintenance
- Port of Everett, Everett – Lighting, Tenant Improvement and Maintenance
- Paramount Petroleum, Shoreline – Lighting, Maintenance and Plant Management
- Jackson Federal Building, Seattle – Mechanical Equipment Replacement
- Costco Corporate Headquarters, Issaquah – Data Center Operations and Cooling Systems

Education and Training

IBEW/NECA-JATC Apprenticeship Training
NECA Estimating Course

Lindsey completed 8 years of honorable service in the United States Navy as an officer in the submarine force. He began his employment at MacDonald-Miller in 2008, and brings considerable experience in complex system operation, coordination and administration.

Lindsey Andrews
System Specialist

Project Role

As Project System Specialist, Lindsey will be responsible for the successful completion of assigned controls, system balancing and commissioning scopes of work.

Duties include:

- Delegate tasks as required to execute; estimating, controls engineering, installation coordination, system balancing, project closeout, and owner acceptance.
- Provide work direction to engineers, system designers, system technicians, balance technicians, electricians, and subcontractors as necessary.
- Coordinate communication with project management, trades and maintain customer relations.
- Ensure proper excecution of warranty.

Project Experience:

- Shoreline Civic Center, Shoreline
- 67,000sf/4 Stories/Office building and Council Chambers/ LEED project
- Snoqualmie Casino, Snoqualmie
  165,000sf Cafeteria, Gaming Floor, and Office Spaces
- Washington Square, Bellevue
  Two 25 Story Condo Towers/4 Story Garage

Education and Training

BS Mechanical Engineering
University of Wyoming, Laramie, WY
Naval Nuclear Power School, Charleston, SC
Naval Nuclear Power Prototype, Ballston Spa, NY
Naval Leadership and Submarine Operations, Groton, CT
Nuclear Propulsion Engineer Qualified

References

LCDR Christian Wunsch CSDS-5, Operations Officer, 360.315.4440

Gary has been a project engineer since 1986. He joined MacMiller in 1994 where he is responsible for designing and leading design teams on HVAC and plumbing projects.

Gary Wallace, P.E., LEED AP

HVAC Project Engineer

Project Role

As HVAC Engineer, Gary will be responsible for design and the coordination of the HVAC portion of the project.

Duties include:

- Design and lead others in the design of HVAC systems
- Clearly indicate and coordinate all work required of others
- Maintain job files and correspondence logs
- Attend all project design meetings

Project Experience:

Residential/Mixed-Use

- Millennium Tower, Seattle| 20-story, Retail/Residential/Office mixed-use
- Issaquah Highlands, Issaquah | HVAC Design for 4-story apartment building
- Arden Nursing Home, Bellingham | HVAC Design
- First Hill, Seattle | Mechanical System Renovation

Office Building

- Zetron, Bellevue | 220,000 SF, 3-story office building
- Evergreen Building, Kirkland | 6-story office building
- King Street Center, Seattle | King County office building, Gold EB Rating
- 2501 Elliott Avenue, Seattle | HVAC Design, 4-story office building remodel
- Bellevue Technology Tower, Bellevue | HVAC Design 19-story high-tech office bldg.
- Park Place, Seattle | HVAC Design for retrofit of 21-story office building

Educational Facilities

- UW Memorial Center, Seattle | Eye Center
- Seattle University, Seattle | Bannon Hall Chemistry Building
- UW Bagley Hall Renovation, Seattle
- UW Penthouse Theatre, Seattle

Bio-Tech

- Bayers, Northpointe Facilities, Lynnwood | 22,350 SF Warehouse addition, QC lab & support offices TI
- Institute for Systems Biology, Seattle | 65,000 SF Wet lab & lasers

Education and Training

University of Washington, BS in Mechanical Engineering
State of Washington
Professional Engineer
Mechanical Engineering (1992)

References

George Osborne, Lorig Associates, (206) 728-7660
Glen Slattery, Lydig Construction, (425) 885-3314

MacDonald-Miller
FACILITY SOLUTIONS

" David has been designing, programming, and commissioning Building Automation Systems since 1989. His extensive field experience gives him an edge in designing control systems that are easily installed, quickly commissioned, and reliably maintained. He takes particular care in designing programs and graphical interfaces that provide the customer user-friendly access to their automation system."

David Gehman, CEM

Lead Controls Engineer

Project Role

Dave will be the lead control design engineer for the project.

Duties include:

- Review mechanical design modifications
- Select efffiecient control schemes for re-engineered systems
- Create control shop drawings and provide guidance to the field installers and programmers on system performance criteria.

Project Experience:

Office, Retail, and Mixed-use:

- **West 8th**- Seattle, WA
  28-Story office and retail building, Siemens Talon
- **ODS Morrison Tower** - Portland, OR
  24-story mixed-use office and retail - CSI Controls
- **Lincoln Square Office and Retail** - Bellevue, WA
  Large mixed-use multi-block complex, Siemens Talon
- **REI Flagship Store** - Seattle, WA
  Staefa System Two

Medical – High Tech Facilities:

- **Xcyte Technologies**, Seattle, WA
  Clean room lab with extensive remote monitoring– Richards Zeta
- **HMT Technologies**, Eugene, OR
  High tech manufacturing facility—CSI Controls
- **Fisheries Research Lab**, Seattle, WA
  Process control in large laboratory-Staefa System Two

Multi-Building Campuses:

- **Portland Community College,** Portland, OR
  6 campuses, 28 building complete DDC retrofit to Honeywell WEBS (Spyder) controls
- **King County Library System**, Seattle, WA
  HVAC and lighting controls for 48 branch library system, Honeywell WEBS
- **Airway Heights Correction Facility**, Spokane, WA
  1,000 bed prison-Staefa System Two

Education and Training

Westmont College, Santa Barbara, CA - Bachelor of Arts

N Seattle Community College, Seattle, WA--A.A.S., HVAC Design

Tridium R2 Certification

Tridium AX Certification

HVAC Electrician Certification

MacDonald-Miller
FACILITY SOLUTIONS

Pat Hein

HVAC/Refrigeration Start-Up
Commissioning Supervisor

Project Role

Pat supervises refrigeration piping installations. He has worked and continues to support the Service Division, which services and maintains refrigeration, air conditioning and heating systems of all types.

Project Experience

Office

- 1700-7th Avenue, Seattle, WA
  23-story high-rise office building and underground parking – Commissioning
- Center Point Campus, Kent, WA
  730,000 SF of office space equipment replacement and conversion to Richards/Zeta DDC System - Start-Up and Commissioning

Government Facilities

- SeaTac Airport, SeaTac, WA
  Controls, Start-Up and Commissioning for FAA 4th and 6th Floors
- Fife Police Station/City Hall, Fife, WA
  Start-Up and Commissioning

Markets/Food

- Medallion Foods, Frederickson, WA
  Controls, Start-Up and Commissioning
- Costco, Tacoma, WA
  Controls, Start-Up and Commissioning
- Top Foods, Lacey, WA
  Controls, Start-Up and Commissioning

Education & Training

EPA Certified – Refrigerant Recovery Management (July 1993)
Certified Electrician Limited Energy (June 1996)
City of Seattle Certified Refrigeration Journeyman (July 1998)
Certified Electrical Administrator HVAC/R (February 2000)
Certified ABB VFD Start-Up (January 2000)
TABB Certification Class/90-Hour Class (June 2001)
Sheetmetal Workers Local #66

Experience

Pat brought his talents to MacDonald-Miller in 1998. He has over 17 years in the HVAC/R industry. His primary responsibilities include start-up and commissioning.

School

- Cascade Christian, Puyallup, WA
  Controls, Start-Up and Commissioning

Other Projects

- Gene Autry Museum, Los Angeles, CA
  Controls Renovation
- Key Arena Courtside Club, Seattle, WA
  Start-Up and Commissioning

MacDonald-Miller
FACILITY SOLUTIONS

Ron Landberg

Building Performance TAB & Commissioning Supervisor

Project Role

Ron directs our test and balance teams and our Commissioning technicians. He oversees all of our projects, making sure NEBB standards are meet and ensures we are using the most efficient procedures. In addition to our internal work, Ron work as a third party rep for the State's GA division on college projects, most recently at Peninsula College and Clover Park Community College.

Project Experience

Commissioning

- Microsoft Augusta & Building 28 - Mechanical Commissioning Agent
- Microsoft Building 25 Cooling Upgrade - Mechanical Commissioning Agent
- Microsoft Buildings 9 & 10 MECS Upgrade
- Mechanical Commissioning Agent / Onsite Safety Coordinator
- BEQ Mechanical Commissioning Agent

Office

- Redmond City Hall | LEED NC Silver
- Microsoft TI at Lincoln Square | LEED CI
- Microsoft Building 88 | LEED CI Gold
- Summit Building, Puget Sound Energy TI | LEED CI
- City Center Plaza | LEED CS Gold
- King County Goat Hill Office Building | LEED CS Gold
- West 8th Office Building | LEED CS Gold
- 2 Newport | LEED CS Silver
- Seventh & Madison | LEED CS Gold
- BEQ | LEED NC Silver
- Edna Lucille Goodrich Building (Tumwater Office Building), four stories and 210759 square feet, LEED Gold.
- CIVICA Office Commons, Bellevue, WA
  Performed Pressure Testing for 315,000 SF of Class A Office Space.
- Five Newport, Bellevue, WA
  10-story tenant improvement for Voice Stream
- Millennium Office Park, Redmond, WA
  Microsoft Building 10 Central Plant (CP)
- Millennium Office Park, Redmond, WA
  Building D
- 1700 7th Avenue, Seattle, WA
  $6,788,000 high-rise office building for Clise/Nordstrom
- Three Bellevue Center, Bellevue, WA
  22-story high-rise office building.
  Tenant Improvements:
  Infospace, MSI & ITI, Compware, Factory Mutual, KeyBank, NWFWW
- 3100 Northup, Bellevue, WA
  Low-rise office building
- Microsoft Building, Redmond, WA
  10 CP 1-6 CHW upgrade
- MCI, Kent, WA
  100,000 SF data center

Biotech

- Eden Bioscience, Bothell, WA
  60,000 SF research laboratory
- Seattle Genetics, Bothell, WA
  50,000 SF biotech facility
- ICOS, Seattle, WA
  Clinic tenant improvement
- Combi-Matrix, Seattle, WA
  Laboratory Project

Residential/Mixed-Use Projects

- Millennium Tower, Seattle, WA
  20-story condominium/office/retail/TI's: Orrick, Goldman, Voyage, Immunex
- Western & Cedar, Seattle, WA
  11-story apartment/residential project
- Ellington Condominiums, Seattle, WA
  $1,060,000 residential project

Experience

Ron was originally hired into our Sheet Metal Department, and apprenticed with Local 66. He changed his focus to be a Mechanical Commissioning Agent at beginning of the Microsoft Augusta Project in 1997. His leadership abilities find him currently as the Supervisor for the Building Performance TAB & Commissioning Department.

- **Education & Training**
- University of Washington
- Western Washington JATC Service Apprenticeship
- TABB Certified Technician

MacDonald-Miller
FACILITY SOLUTIONS

"We make buildings work! There is nothing more satisfying than turning over a mechanical system to our customer and have the system exceed their expectations."

Gary Larkin

Systems Specialist
Cx, TAB, Controls, Start Up

Project Role

As Systems Specialist Gary will be the single-point of accountability for the successful completion of assigned controls, system balancing and commissioning projects. His duties include:

- Coordinating communication with Project Manger /and or customer during all phases of project
- Ensure proper execution of warranty
- Provide work direction to others

Experience

Gary joined MMFS in 2000. He brings with him extensive training and education, making him an important part of the team whatever the building type.

Project Experience

- Valley Medical Center, Kent, WA
  Commissioning and TAB Agent/Consultant for eh hospital's $30M Family Center Expansion and many other smaller tenant improvements
- Hotel 1000, Seattle, WA
  Supervisor of Start Up, Test and Balance and commissioning of 25-story, 5 Star Hotel/Condominiums
- Northpointe Office Building, Lynnwood, WA
  Tab Foreman for 3-story office building
- TRACON Facility, SeaTac, WA
  TAB Foreman for Terminal Radar Approach Control building
- Seattle Genetics, Bothell, WA
  TAB Foreman of 3-story office building

Education & Training

Business Leadership School, Business 2000 – Current
Johnson HVAC Controls – 2006
Richard-Zeta HVAC Controls Troubleshooting - 2006
Business Leadership School, Business 100 – 2005
Industrial CPR/First Aid – 2005
Basic/Advanced Hydronics – 2005
Richard-Zeta Control System Certificate of Completion – 2003
Electrical Motors Theory – 2003
Carrier VVT Systems – 2001
Staefa – Smart II HVAC Controls - 2001
Certified Emission Specialist Technician – 1998
Certified ASE Master Technician - 1997
Associates Degree in Automotive Technology – 1995

Professional Affiliations

City of Seattle Smoke Control System Confidence Tester (SC-1)
Co-chair of Building Operations for Christ Church Kirkland
Town of New Haven, NY Volunteer Fire/Rescue (4 years)

MacDonald-Miller
FACILITY SOLUTIONS

Dave Martinson

System Specialist – Building Performance Group

Project Role

Dave's Project management responsibilities include labor resources, project scheduling, financial upkeep, and budget maintenance. He also does DDC Controls estimating, TAB & Commissioning estimating and oversees the Controls Hardware Engineering Group.

Experience

David has over 15 years of industry experience and is currently a System Specialist in MMFS's Building Performance Group which encompasses controls, test & balance, start-up and building oversight.

Project Experience

Office

- Boeing Commercial Airplane Group, Renton, WA
  Mechanical Systems Commissioning Administrator for Headquarters Building
- Newport Terrace, Bellevue, WA
  139,000 SF/5-story office with 5-story parking garage
- Pierce County Alliance, Tacoma, WA
- Lexus of America Headquarters, Torrance, CA
- 999 Lake Place, Seattle WA
  24-40 Building Expansion
- Century Square Building, Seattle, WA

Retail/Packaging

- Darigold, Sunnyside, WA
  Cheese plant, packaging and cold storage, offices and visitors' area; and store
- Drug Emporium, 6th Avenue Plaza, Seattle, WA

Education Facilities

- Western State Hospital, Steilacoom, WA
  Buildings 17, 18 & 19
- Child Treatment/Study Center, Tacoma, WA
- Pacific University Science Building, Forest Grove, OR

Government Facilities

- U.S. Postal Service Facility, Kent, WA
- Hanford Waste, Richland, WA
  Verification plant

Biotechnical

- Bristol-Myers Squibb, Seattle, WA
  8,000 SF lab and vivarium remodel/expansion
- OSU Seafood Laboratory - Astoria, OR
- Siemens Quantum, Issaquah, WA

Casinos

- Chinook Winds Casino, Lincoln City, OR
  153,443 SF/2-½ story gambling casino
- Chehalis Casino, Rochester, WA
  43,270 SF single-story gambling facility

Golf & Country Clubs

- Indian Summer Country Club, Lacey, WA
  Club house, kitchen, dining, meeting rooms, and offices
- Parklane Clubhouse, Beaverton, OR

Church

- Renton Assembly of God, Renton, WA

Education

MCA Certified Mechanical Project Manager, Level 2, September 2006
Associate of Applied Science Degree in HVAC Design - North Seattle Community College 1993
Enercon Data Controls Workshop - Minneapolis, December 1986
Trane Regional Unitary Service Seminar - Seattle, October 1985
Robertshaw Pneumatic Control Training Seminar – Seattle, May 1985
Refrigeration and Air Conditioning - L.H. Bates Vocational Institute, June 1978
Associate in Arts and Sciences Degree - Ft. Steilacoom Community College, June 1974

MacDonald-Miller
FACILITY SOLUTIONS

Greg Nanadjanians, P.E., LEED AP

Lead Engineer

Project Role

Greg will be responsible for the design and coordination of the plumbing and the hydronic systems. His duties will include:

- Design of plumbing and hydronic systems
- Clearly indicate and coordinate our work with architect and other consultants
- Maintain project files
- Attend all design meetings

Project Experience

Bio-Tech and Medical Buildings

- Corixa, Seattle, WA
  50,000 SF lab/office renovation
- Institute for Systems Biology, Seattle, WA
  65,000 SF wet lab relocation
- Swedish Hospital, Seattle, WA
  275,000 SF Shell & Core design for medical office building
- Virginia Mason CCU, Seattle, WA
  10,000 SF critical care space
- Virginia Mason Dermatorolgy Dept.
  Complete 9th floor TI, HVAC & plumbing
- 4245 Rosevelt UW Medical Office Building
  Complete buildout of 4-story MOB
- CDR (Xcyte Therapies), Ballard, WA
  Chemistry and biology wet labs
- Seattle Life Sciences Vivarium, Seattle, WA
  13,800 SF T.I. of existing lab
- Nordstrom Tower MOB, Seattle, WA
  Dr. Pilot, D.D.S. tenant improvement
- Elan Plastic Surgery, Kirkland, WA
- ED Radiology, Virginia Mason, Seattle, WA
  Design of HVAC and Plumbing systems
- Seattle Genetics, Bothell, WA
  50,000 SF bio-tech facility

Schools

- Franklin High School, Los Angeles, CA
- Morningside Elementary, San Pedro, CA
- Eagle Rock Elementary, Eagle Rock, CA
- USC Dental School, Los Angeles, CA
- Cal Tech Medical Lab, Pasadena, CA
- USC Science Building, Los Angeles, CA

Experience

With 26 years of HVAC and Plumbing Engineering experience Greg's expertise has been influential in many award-winning projects at MMFS. *Contracting Business Magazine* selected Institute for Systems of Biology in 2002 for the retrofit/renovations award for design-build projects over $500,000. In 1996 Greg was the lead designer and engineer of the State of the art "Rain Water Reclamation System" for King Street Center which received a LEED Gold EB rating. In 1994 *Contracting Business Magazine* awarded the Labor and Industries Building first place award for Design-Build Comfort and Quality for the New Construction category where again, Greg was the lead designer and engineer. For over 20 years Greg has been committed to MacDonald-Miller's mission of making great buildings work well. He is a great asset to any team.

High-Rise Office Buildings

- Lincoln Square Office Tower, Bellevue, WA
  533,000 SF office space
- Sunset I-90, Bellevue, WA
  449,764 SF - 3 buildings, main garage, and parking
- REI Flagship Facility, Seattle, WA
  140,000 SF/4-story corporate headquarters building
- Newport Terrace, Bellevue, WA
  139,000 SF/5-story office and parking
- ODS Morrison Tower, Portland, OR
  24-story mixed-use office, retail and parking
- Labor & Industries, Olympia, WA
  425,000 SF office building
- Three Bellevue Center, Bellevue, WA
  471,500 SF/22-story office building
- King Street Center, Seattle, WA
  300,000 SF/8-story office building, LEED Gold EB
- Unigard, Bellevue, WA
  320,000 SF - 4 new office buildings

Residential Facilities

- Ellington Condominiums, Seattle, WA
  (2) 12-story towers with 204 units

- Vine Building, Seattle, WA 196,132 SF condominium project

Education & Licenses

- Bachelor of Science in Mechanical Engineering (BSME), June 1983
- Registered Professional Engineer (Mechanical), State of California (#25058)
- Registered Professional Engineer (Mechanical) by Reciprocity, State of Washington (#28814)

References

Paul Lundy, Seattle Genetics, 425.489.4931
William R. Sheldon, Sheldon Architecture, 206.625.1000
Michael Chaplin, Sclater Partners Architects 206.624.8682

Greg Noel
Construction Special Project
Project Engineer, LEED AP

Project Role

As Project Engineer, Greg will be responsible for design and the coordination of the project. His duties shall be to:

- Design and lead others in the design of mechanical systems
- Clearly indicate and coordinate all work required of others
  on our behalf
- Maintain job files and correspondence logs
- Attend all project design meetings

Experience

Greg entered the mechanical engineering industry in 2000 and is currently a member of the MMFS Construction Special Projects Engineering Department. Greg's engineering experience is synergized with his prior hands-on field experience in Air Balance & Building Commissioning.

Project Experience

Medical & Biotech

- Virgina Mason Radiology, Seattle, WA
  Partial floor TI
- Children's Hospital, Seattle, WA
  P Met Park West/ Partial floor TI
- Bailey Boushay House, Seattle, WA
  Medicine storage refrigeration retrofit
- Ryther Child Center, Seattle, WA
  HVAC upgrade

Data Centers

- Sabey Data Center "Exodus III", Tukwila, WA
- Savvis Data Center, Tukwila, WA
- Lexis Nexis Data Center, Bellevue, WA
- Mila Financial, Mountlake Terrace, WA
  Data Room upgrades

Office Space

- Amazon.com at Union Station , Seattle, WA
  Buildings 1 & 3, various projects on 9 floors
- Amazon.com at Columbia Center, Seattle, WA
  8 Floors
- Davis Wright Tremaine Law Firm, Seattle, WA
  1201 3rd Ave Bldg, 8 full floors
- Opus Northwest, Bellevue, WA
  Full floor office

Other

- McCaw Hall, Seattle, WA
  Seattle International Film Festival Digital Projection Upgrades
- Greater Grace Chapel, Tacoma, WA
- Metropolitan Park West, Seattle, WA
  Heatpump upgrades – high efficiency heat pump retrofit on 6 floors
- Honeywell Aerospace & Defense, Redmond, WA
  Clean room, laboratory benches, process/testing workstations, office space, server room

Residential

- Bay Vista Condominium, Seattle, WA
  2-Story Penthouse Condo

Education and Training

Bachelor of Science, Mechanical Engineering, Washington State University, 1998
HVAC Fundamentals class, University of Washington, 2000
Air Conditioning Design class, University of Washington, 2001

References

Hamid Korasani, PE; John F. Buchan Construction, Inc.; 425.827.1439
Rick Sanislo, Opus NW Contractors, LLC, 425.453.4100
Steve Burkhardt, Sparling Electrical Engineering, 206.667.0516

MacDonald-Miller
FACILITY SOLUTIONS

In addition to Jason's engineering, construction, and manufacturing experience, he's been a certified Master Instructor for over 8 years. Jason was awarded an Excellence in Education award and Instructor of the Year for the Northwest District while teaching at ITT Technical Institutes located in Utah, Washington, and Pennsylvania.

Jason Schaat, MDes

Building Information Modeling (BIM) Specialist

Project Role

As BIM Specialist, Jason is responsible for coordinating information exchange between in-house personnel and external design team members as it relates to the virtual building model for a project.

Duties include:

- Collaborating with Design and Construction teams to help develop and support BIM strategies for various projects and to promote internal team expertise in BIM.
- Ensuring that the internal project team utilizes the most advanced technology to provide the client with efficient, coordinated constructability of mechanical systems.
- Provides on-going internal application support & technical assistance in the form of training and customization of 3D software as well as the information exchange processes

Project Experience:

- 1521 Second Avenue, Seattle | New Construction. Oversee 3D Modeling of mechanical and BIM coordination between project members.
- Virginia Mason Hospital Expansion, Seattle| New Construction. Oversee 3D Modeling of mechanical and BIM coordination between project members
- NW Detention Center, Seattle WA | New Construction. Oversee 3D Modeling of mechanical and BIM coordination between project members
- 5350 Tallman, Ballard | New Construction of 5-story medical office building. Oversee 3D Modeling of mechanical and BIM coordination between project members
- 5th & Columbia, Seattle | New Construction of 45 Story Office Tower
  Oversaw 3D & CAD modeling in conjunction with Building Information Exchange
- Expedia TI. Tower 333, Seattle | T.I. Installation of Network and Comm, 14 levels of office space and server space.Participated in 3D modeling and 3D coordination with all building trades involved in the project. Consulted on BIM process.
- Korry Electronics, Seattle | 420,000 SF Manufacturing Facility, Provided 3D consulting services and electrical design drawings
- Horizon House Retirement Building, Bellevue | Oversaw record drawings through completion.
- Mirabella, Seattle | New construction of 15 story condominium & retirement dwelling, Oversaw construction and record drawings.
- City Center Plaza, Bellevue | 25 Story Office Tower, 3D CAD Modeling
- West 8th Office Tower, Seattle | 28 Floors, Oversee 3D Modeling and BIM

Education and Training

Master of Design in Information & Interaction Design | Carnegie Mellon University, Pittsburgh, PA
BS, Electrical Engineering | University of Utah, Salt Lake City, UT
BA, Industrial Design | University of Utah, Salt Lake City, UT
Autodesk Certified Trainer

MacDonald-Miller
FACILITY SOLUTIONS

Open dialog and collaboration nurtures a meaningful refinement process. MacDonald-Miller's engineering team is in continuous communication with our sales, field, and project managers, to make sure we're all pulling together to deliver what was promised to our customers.

Doug Turley, P.E., LEED AP

E.V.P. – Chief Engineer

Project Role

As the Director of Engineering, Doug manages the day-to-day design to ensure that quality levels are high and schedules are met. Doug reviews work at critical stages to ensure that coordination and design are correct.

Duties include:

- Managing in-house design activies and monitoring progress of coordination
- Ensuring that we are properly staffed to meet all deadlines and commitments
- Revewing all calculations and drawings at SD, DD, Permit and CD milestones
- Providing concepetual design input and value engineering suggestions

Project Experience:

- Redmond City Hall | LEED NC Silver
  125,000sf, chilled water with hydronic heat
- Microsoft TI at Lincoln Square | LEED CI
  15 floor, 300,000sf TI, MM provided enhanced commissioning & controls
- Microsoft Building 88 | LEED CI Gold
  250,000sf , Lean Last Planner method was used internally for this fast track project
- Summit Building, Puget Sound Energy TI | LEED CI
- City Center Plaza | LEED CS Gold
  27 story high-rise, chilled rooftop VAV system with fan wall technology
- King County Goat Hill Office Building | LEED CS Gold
  296,000sf, 13-story, storm water filtration vault, 2 1500-ton rain water storage tanks for irrigation, over 40% domestic water savings
- West 8th Office Building | LEED CS Gold
  500,000sf 27 story green office building, includes 5 levels of below grade parking and 2 levels above grade, floor by floor chilled water
- 2 Newport | LEED CS Silver
- Seventh & Madison | LEED CS Gold
  196,00sf office space, 7,500sf retail, 97,200sf below grade parking
- Navy Bachelor Enlisted Quarters | LEED NC Silver
  - Commander's Accommodation for Safety
  - CCASS Outstanding Rating
  - AGC 2010 Build Washington Award for Public Buildings over $5 Million
  - DBIA National Design-Build Excellence Award for Public Sector Projects over $50 Million
  - McGraw Hill Construction and Northwest Construction Best of 2010 Award
- Edna Lucille Goodrich Building (Tumwater Office Building),
  Energy savings is over 37% per year. Water consumption reduced by over 44%.Waste water reduced by over 50%.| LEED Gold
  - Contracting Business' Design-Build Award winner for 2005

Education and Training

Professional Engineering License by Exam
#36163 (Washington), Arizona, Oregon, Hawaii

References

Bruce Bullman, ELS Architects, 510.549.2929
Jeff Nielson, BNBuilders, 206.382.3443

MacDonald-Miller
FACILITY SOLUTIONS

Ed Culp, CEM/NEBB Certified Professional

Building Performance Specialist
Commissioning Agent/Energy Audits

"To do the job the right way the first time maintaining my personal professional integrity and achieving customer satisfaction above all else."

Project Role

Ed will be the Energy Auditor and Engineer. His specific duties will include:

- Supervise and perform TAB work on HVAC Systems.
- Perform commissioning of HVAC Systems.
- Perform energy audits for HVAC and lighting systems.
- Scheduling and coordination of this work with other departments, other trades and building owners.

Experience Summary

Ed has 27 years experience in the HVAC Industry including:

- Eight years of experience in fabrication and installation of HVAC duct systems;
- One year of experience in fabrication and installation of Architectural Sheet Metal.;
- Seventeen years of experience in TAB and commissioning of HVAC Systems.

He also possesses credentials from the National Environmental Balancing Bureau and is a qualified supervisor for both Air and Hydronic balancing of environmental systems. Ed is a Certified Energy Manager (CEM) certification from the Association of Energy Engineers.

Project Experience

- Boeing Building 9-98 TI

Duties and responsibilities include scheduling, coordinating, supervising and performing commissioning activities for the HVAC Systems on this project.

- KCLS Energy Audits:

Perform energy consumption audits for facilities owned and operated by the King County Library System, King County, WASF

- Boeing Building 9-90 TI, Seattle, WA

Perform commissioning of the HVAC systems, schedule and coordinate this work with other departments, other trades, and Boeing.

- Clarian Clinical Laboratory Consolidation, Indianapolis, IN

This facility is a consolidation of the laboratories of five hospitals into a single centrally located building. Duties and responsibilities included scheduling, coordination and performance of TAB work and providing support to the Commissioning Agent as required

- Bellevue Regional Library Retro Commissioning, Bellevue, WA

Retro commissioning of main air handler unit and VAV boxes as determined from the results of the energy audit.

- Westin Hotel, Bellevue, WA

Commissioning of systems as required to optimize performance and reduce energy consumption.

Education & Training

OSHA 30
Ivy Technical State College
National Environmental Balancing Bureau
Sheet Metal Workers International Association Programs
Sheet Metal Contractors National Association Programs
Sheet Metal Workers International Association Programs
University of Evansville

MacDonald-Miller
FACILITY SOLUTIONS

Jim West
Safety Director

Safe job sites are a critical part of the MacMiller mission. MMFS is very proud of our 0.4852 Experience Factor -- one of the lowest in the industry. With 25 years of experience, Jim brings his expertise as a qualified professional in the construction industry to coordinate all safety aspects of a project.

Project Role

With over 22 years working in the WISHA program, Jim brings practical experience in working pro-actively with employers to help reduce injuries and illnesses. With that experience, combined with the previous decades of hard work this company has gone though to achieve a low experience rating of 0.4852, MMFS can hopefully reduce one of the lowest rates in the industry even lower. Jim works very hard to see that our job sites are clean and safe, and seeks to identify safety issues before they become a threat.

He will ensure that:

- Site Safety Meetings are held weekly and include all employees and subcontractors.
- Project/site safety inspections/audits are held weekly

Experience:

- **Safety Consultation & Risk Mgmt. Supervisor**
  Department of Labor and Industries, Tukwila, WA (2004-2007)
  Supervised 12 Risk Management & Safety Consultants in King County. Reached production goal for first time in this region for two consecutive years.
- **Safety Technical Specialist**
  Department of Labor and Industries, Tumwater, WA (2000-2004)
  Lead Technical Specialist on Innovations Project responsible for Machine Guarding Standard. Largest standard in Innovations Project. Also specialist for rigging and walk/w surfaces.
- **Safety & Health Consultation Supervisor**
  Department of Labor and Industries, Tacoma, WA (1987-2000)
  Supervised 5 Safety and 2 Industrial Hygiene Consultants. Started as only consultant, initiated training plan to transition staff into performing consultations. In the last few years reached all goals with highest production in the state.
- **Industrial Safety Engineer**
  Department of Labor and Industries, Seattle, WA (1985-1987)
  Only Safety Engineer (consultant) for King County.
- **Logging Safety Inspector**
  Department of Labor and Industries, Seattle, WA (1984-1985)
  Performed safety inspections in sawmills, shake mills, logging operations, construction and general industry.

Education and Training

UW Bachelor of Science
Certified Safety Professional, 2008
GRCC Forestry Technology Degree
Certified Toastmaster
OSHA Instructor - Construction
OSHA Instructor - General Industry
OSHA VPP Trained Evaluator
Tunneling Training Misc. Classes (over 100 hours)
Machine Safety Trainer for WISHA Inspectors
Morrow Trained Tower Crane Inspector

MacDonald-Miller
FACILITY SOLUTIONS

Stephen Wilson
Senior Project Manager

Project Role

Stephen's primary focus will be to manage the details during the construction phase of the project. He will interface with the design team during pre-construction, assisting with estimates and budget control. His duties will include:

- Equipment and materials buyout and tracking
- Scheduling and manpower allocation
- Managing sub-tier subcontractors
- Progress billings
- Submittals, O&M's and closeout documentation

Experience

Stephen joined MacDonald-Miller in 1988 in the Estimating Department. As a project manager since 1991, he has managed a wide range of mechanical and plumbing projects.

Project Experience

High-Rise Office Buildings

- Goat Hill King County Office Building
  13 stories, Seattle, WA
- Lincoln Square, Bellevue, WA
  2,400,000 SF/ Hotel/ Condominium high-rise
- Sunset I-90, Bellevue, WA
- Three Bellevue Center, Bellevue, WA
  471,500 SF/22 Story Office Building
- ODS Morrison Tower, Portland, OR
  382,500 SF/24-Story Mixed-Use Office, Retail and Parking
- Labor & Industries, Olympia, WA
  425,000 SF
- Shilshole Project, Seattle, WA

Energy Retrofits

- King County Medical, Seattle, WA
  VFD's, Rooftop AC, Electrical Retrofit
- Park Place, Seattle, WA
  357,000 SF/21-Story Office Building

Schools

- Antioch University, Seattle, WA
  2-Story Classroom/Administration
- Holy Family, Kirkland, WA
  School Addition

Education & Training

University of Washington
BS/Construction Management

Trane Commercial Sales
Air Conditioning Clinic

Fails Management Institute
Construction Supervisory Training

References

Greg Wojcicki, Skanska, 425.818.1746
Andrew Bjorn, Turner, 206.423.6146
Mike Perry, Skanska, 206.726.800

"Having a clear understanding of the total costs of ownership is too often overlooked during the planning and design phases of projects. Considering a 30 year cost of ownership model, over 50% of the cost of ownership is Operations and Maintenance of the facility infrastructure. At Mac-Miller I take personal responsibility for ensuring that our customers have the opportunity to quantify, evaluate and base decisions regarding major capital expenditures on a total cost of ownership performance model as well as provide our commitment to co-manage the facility to deliver the results."

Perry England
Vice President
Building Performance

Business Experience

Perry brings to Mac-Miller over 20 years of experience encompassing the pursuit and execution of lifecycle-based delivery models for the finance, design, construction, ownership, operation and maintenance of public and private infrastructure – new and existing.

Project Role:

- Building Performance Modeling
- Energy Modeling
- Performance-based Contracting
- Business Case Justification for Infrastructure Renewal and Capital Budget Expenditures
- Lifecycle Costing
- Technology Application, Engineering, Installation and Management

Project Experience:

- University of Washington | Research & Technology Building
- Port of Seattle | Seattle-Tacoma International Airport Access Control System Upgrades
- Alberta Infrastructure | Calgary Courts Centre
- Vancouver General Hospital | Academic Ambulatory Care
- Vancouver Coastal Health | Abbottsford Hospital
- Clackamas County | Red Soils Project
- Cingular Wireless | Bothell Data Center
- Sea World of Florida | Central Utility Plant Modernization
- Port of Cape Canaveral | Walt Disney Cruise Terminal (CT#10)
- US Air Force | Titan Rocket Processing Facility
- Planet Hollywood | National Construction, Renovation & Operations Program
- TVA Nuclear Power Plant | NRC Critical Path Re-Start of Network Operations Center
- Oak Ridge National Laboratory | Animal Lab Energy Conservation Project

Education and Training

University of Tennessee, BS/Mechanical Engineering

Professional Affiliations

Association of General Contractors (AGC)
National Association of Industrial and Office Properties (NAIOP)
University of Washington's Institute for Collaborative Building – Charter Member & Advisory Board
American Society of Heating, Piping and Refrigeration Engineers (ASHRAE)
Mechanical Contractors Association (MCA)
Design Build Institute of America (DBIA)
American Institute of Architects (AIA)

Proven leader with over 15 years of experience in managing and improving of commercial and government property and assets. In-depth experience with HVAC Automations, Lighting Control systems, Alarm safety and warning systems and electrical infrastructure.

Jeremy Richmond, LEED AP O+M

Senior Building Performance Specialist

Project Role

As a Senior Building Performance Engineer, Jeremy will be responsible for the development and implementation of energy related strategies in the project. Jeremy will analyze the property, develop the energy strategies, implement and then track the improvements.

Duties include:

- Scoping Studies
- Energy Analysis
- Controls Sequencing
- Performance Measurement and Verification
- LEED Consultant

Project Experience:

- Russell Investments Center, 1.2M SqFt, LEED EBOM Platinum, Energy Star Score 100
- Seattle Art Museum Controls Retrofit
- Russell Investments TI, 200,000 SqFt LEED CI Gold
- Boeing Commercial Airlines TI, 50,000 SqFt, LEED CI in-progress
- Northern Trust Bank, 11,000 SqFt LEED CI in-progress
- Swedish Orthopedic Institute, 40,000 SqFt Medical Office Building
- George Russell Hall Jr., 50,000 SqFt Mixed Use Office Building

Education and Training

-LEED AP O+M
-BS Business Administration, Major in Management
Columbia College, Marysville, WA
-06A and 07 Washington Electrical Licenses
-Refrigeration Operating Engineer, City of Seattle
-Alerton Certified Engineer – BACtalk Sytems
-Trane CenTraVac Electronic Controls, LaCrosse, WI
-US Navy Advanced Electrical Journeyman, Chicago, IL
-US Navy Boiler Automation, Chicago, IL
-US Navy Electricity & Electronics, Chicago, IL

MacDonald-Miller
FACILITY SOLUTIONS

John Van Hersett, CEM
Project Manager- Energy Auditor

Project Role
As a Project Manager & Energy Auditor John will be responsible for the design and coordination of the project.

Duties include:
- Design and lead others in the design of mechanical systems
- Clearly idnicate and coordiante all work required of others on our behalf
- Maintain job files and correspondence logs
- Attend all project design meetings

Project Experience:
- **REI Rainer/Smith Building Controls, Kent, WA**
  Replaced failing building controls, integrate to existing HVAC equipment. Provided new web based front end and optimized building performance.
- **Fairmont Olympic Hotel- IGA, Seattle, WA**
  Investment Grade Auti of 635 rooms four star hotel resulting in a $4,055, 121 conservation project with a guaranteed energy savings of 13,766,981.48kBtu/Yr. Co
- **Highline Community College IGA, DesMoines, WA**
  Washington State Department of Commerce 2012 energy Efficiency Grants for Higher Education- IGA resulting in a $3,262,447 conservation project award with a guaranteed energy savings of 2,570,145 kBtu/Yr. Includes local utility incentives, state and federal grant monies.
- **Airway Heights Correction Center, Airway Heights, WA**
  Replace failing building controls, integrate to exitising HVAC equipment. Provide new web based front end and optimize building perfromance campus wide 28 buildings total in correction center facility.

Education and Training (Calibri 10pt Bold)
BA Business Administration/Management Information Systems, Eastern Washington University
Certified Energy Manager- CEM, Association of Energy Engineers

Appendix #5

Form 330

Additional Information on Request

© Copyright 2013, MacDonald-Miller Facility Solutions

ARCHITECT - ENGINEER QUALIFICATIONS

PART I - CONTRACT-SPECIFIC QUALIFICATIONS

A. CONTRACT INFORMATION

1. TITLE AND LOCATION *(City and State)*
State of WA Energy Savings Performance Contracting Services 2013-133

2. PUBLIC NOTICE DATE
01/23/2013

3. SOLICITATION OR PROJECT NUMBER
2013-133

B. ARCHITECT-ENGINEER POINT OF CONTACT

4. NAME AND TITLE
Perry England, VP Building Performance

5. NAME OF FIRM
MacDonald-Miller Facility Solutions

6. TELEPHONE NUMBER
206-768-4218

7. FAX NUMBER
206-768-4219

8. E-MAIL ADDRESS
Perry.England@macmiller.com

C. PROPOSED TEAM

(Complete this section for the prime contractor and all key subcontractors.)

	(Check) PRIME	J-V PARTNER	SUBCON-TRACTOR	9. FIRM NAME	10. ADDRESS	11. ROLE IN THIS CONTRACT
a.	X			MacDonald-Miller Facility Solutions ☐ CHECK IF BRANCH OFFICE	7717 Detroit Ave SW Seattle, WA 98146	Contractor
b.				☐ CHECK IF BRANCH OFFICE		
c.				☐ CHECK IF BRANCH OFFICE		
d.				☐ CHECK IF BRANCH OFFICE		
e.				☐ CHECK IF BRANCH OFFICE		
f.				☐ CHECK IF BRANCH OFFICE		

D. ORGANIZATIONAL CHART OF PROPOSED TEAM ☒ *(Attached)*

MacDonald-Miller
FACILITY SOLUTIONS

Washington State Public Entity

- **Service Operations Manager**
- **Account Executive**
- **John Van Hersett +****
  Project Manager & System Specialist
  - **Ron Landberg**
    Field Engineering & Commissioning
  - **Doug Gehman**
    Controls Engineering
  - **Paul Young+**
    Utility Relations & Lighting Coordinator
  - **Ed Culp*, Jeremy Richmond**, Jared Sheeks+*****
    Energy Engineer & Performance Assurance Specialist
    - **Field Installation Resources**
      Sheet Metal Workers, Pipe Fitters, Plumbers, Electricians, Insulators, Building Automation Specialist, Test & Balance Technicians, Cx Specialist, Lighting Specialist & Technicians, Service Technicians, Insulation Technicians, Specialty Craftsman
  - **Program Administrator**
  - **Product Specialist**
  - **Doug Campbell**
    Purchasing
- **Stephen Wilson**
  Energy Operations Manager
- **Perry England**
  VP Building Performance Executive-In-Charge

Legend:
* Certified Energy Manager
** CEM & Certified M&V Professional
*** CEM & Project Engineer
+ LEED AP

E. RESUMES OF KEY PERSONNEL PROPOSED FOR THIS CONTRACT

(Complete one Section E for each key person.)

12. NAME	13. ROLE IN THIS CONTRACT	14. YEARS EXPERIENCE a. TOTAL	b. WITH CURRENT FIRM
Bill Kegley	Boiler Specialist	30	1

15. FIRM NAME AND LOCATION *(City and State)*

MacDonald-Miller Facility Solutions Seattle, WA

16. EDUCATION *(DEGREE AND SPECIALIZATION)*

17. CURRENT PROFESSIONAL REGISTRATION *(STATE AND DISCIPLINE)*

Boiler License#KEGLEB*961L1

18. OTHER PROFESSIONAL QUALIFICATIONS *(Publications, Organizations, Training, Awards, etc.)*

19. RELEVANT PROJECTS

a.

(1) TITLE AND LOCATION *(City and State)*: Tacoma General Hospital Tacoma, WA

(2) YEAR COMPLETED — PROFESSIONAL SERVICES: 2012 — CONSTRUCTION *(If applicable)*: 2012

☑ Check if project performed with current firm

(3) BRIEF DESCRIPTION *(Brief scope, size, cost, etc.)* AND SPECIFIC ROLE

Boiler Controls Upgrades. Total cost for all 3 main boilers is $2,792,753, project still in process. Bill's role was Boiler Technician/Supervisor.

b.

(1) TITLE AND LOCATION *(City and State)*: Highline Community College Des Moines, WA

(2) YEAR COMPLETED — PROFESSIONAL SERVICES: 2012 — CONSTRUCTION *(If applicable)*: 2012

☑ Check if project performed with current firm

(3) BRIEF DESCRIPTION *(Brief scope, size, cost, etc.)* AND SPECIFIC ROLE

Boiler #3 upgrade. Total cost of project $80,000. Bill's role was Boiler Technician/Supervisor.

c.

(1) TITLE AND LOCATION *(City and State)*:

(2) YEAR COMPLETED — PROFESSIONAL SERVICES: — CONSTRUCTION *(If applicable)*:

☐ Check if project performed with current firm

(3) BRIEF DESCRIPTION *(Brief scope, size, cost, etc.)* AND SPECIFIC ROLE

d.

(1) TITLE AND LOCATION *(City and State)*:

(2) YEAR COMPLETED — PROFESSIONAL SERVICES: — CONSTRUCTION *(If applicable)*:

☐ Check if project performed with current firm

(3) BRIEF DESCRIPTION *(Brief scope, size, cost, etc.)* AND SPECIFIC ROLE

e.

(1) TITLE AND LOCATION *(City and State)*:

(2) YEAR COMPLETED — PROFESSIONAL SERVICES: — CONSTRUCTION *(If applicable)*:

☐ Check if project performed with current firm

(3) BRIEF DESCRIPTION *(Brief scope, size, cost, etc.)* AND SPECIFIC ROLE

E. RESUMES OF KEY PERSONNEL PROPOSED FOR THIS CONTRACT

(Complete one Section E for each key person.)

12. NAME	13. ROLE IN THIS CONTRACT	14. YEARS EXPERIENCE a. TOTAL	b. WITH CURRENT FIRM
Ed Adams	Electrical Supervisor	22	18

15. FIRM NAME AND LOCATION *(City and State)*

MacDonald-Miller Facility Solutions Seattle, WA

16. EDUCATION *(DEGREE AND SPECIALIZATION)*

17. CURRENT PROFESSIONAL REGISTRATION *(STATE AND DISCIPLINE)*

Electrical License#: ADAMSEJ099CB

18. OTHER PROFESSIONAL QUALIFICATIONS *(Publications, Organizations, Training, Awards, etc.)*

IBEW/NECA-JATC Apprenticeship Training
NECA Estimating Course

19. RELEVANT PROJECTS

a.

(1) TITLE AND LOCATION *(City and State)*: Seattle Central Community College Seattle, WA

(2) YEAR COMPLETED — PROFESSIONAL SERVICES: ; CONSTRUCTION *(If applicable)*:

(3) BRIEF DESCRIPTION *(Brief scope, size, cost, etc.)* AND SPECIFIC ROLE

Library and classrooms.

✓ Check if project performed with current firm

b.

(1) TITLE AND LOCATION *(City and State)*: Boeing Corporation- 38-01 Seattle, WA

(2) YEAR COMPLETED — PROFESSIONAL SERVICES: ; CONSTRUCTION *(If applicable)*:

(3) BRIEF DESCRIPTION *(Brief scope, size, cost, etc.)* AND SPECIFIC ROLE

Building construction.

✓ Check if project performed with current firm

c.

(1) TITLE AND LOCATION *(City and State)*: Seattle- Tacoma International Airport SeaTac, WA

(2) YEAR COMPLETED — PROFESSIONAL SERVICES: ; CONSTRUCTION *(If applicable)*:

(3) BRIEF DESCRIPTION *(Brief scope, size, cost, etc.)* AND SPECIFIC ROLE

Lighting and signage through-out.

✓ Check if project performed with current firm

d.

(1) TITLE AND LOCATION *(City and State)*: University of Washington Bothell Campus Bothell, WA

(2) YEAR COMPLETED — PROFESSIONAL SERVICES: ; CONSTRUCTION *(If applicable)*:

(3) BRIEF DESCRIPTION *(Brief scope, size, cost, etc.)* AND SPECIFIC ROLE

Lighting, tenant improvement and maintenance.

✓ Check if project performed with current firm

e.

(1) TITLE AND LOCATION *(City and State)*: Port of Everett Everett, WA

(2) YEAR COMPLETED — PROFESSIONAL SERVICES: ; CONSTRUCTION *(If applicable)*:

(3) BRIEF DESCRIPTION *(Brief scope, size, cost, etc.)* AND SPECIFIC ROLE

Tenant improvements and maintenance.

✓ Check if project performed with current firm

E. RESUMES OF KEY PERSONNEL PROPOSED FOR THIS CONTRACT

(Complete one Section E for each key person.)

12. NAME	13. ROLE IN THIS CONTRACT	14. YEARS EXPERIENCE a. TOTAL	b. WITH CURRENT FIRM
Ed Culp	Utility Energy Analysis	28	7

15. FIRM NAME AND LOCATION *(City and State)*

MacDonald-Miller Facility Solutions Seattle, WA

16. EDUCATION *(DEGREE AND SPECIALIZATION)*

Associated Degree in Applied Science- Ivey Technical

17. CURRENT PROFESSIONAL REGISTRATION *(STATE AND DISCIPLINE)*

18. OTHER PROFESSIONAL QUALIFICATIONS *(Publications, Organizations, Training, Awards, etc.)*

NEBB Certified, Certified Energy Manager, Association of Energy Engineers

19. RELEVANT PROJECTS

a.

(1) TITLE AND LOCATION *(City and State)*: YMCA of Greater Seattle, Seattle, WA

(2) YEAR COMPLETED — PROFESSIONAL SERVICES: 2012 — CONSTRUCTION *(If applicable)*:

☑ Check if project performed with current firm

(3) BRIEF DESCRIPTION *(Brief scope, size, cost, etc.)* AND SPECIFIC ROLE

Capital & Energy conservation project development for 6 locations with this customer. Total of all projects: $2.4 million dollars.

b.

(1) TITLE AND LOCATION *(City and State)*: The Westin Bellevue, Bellevue, WA

(2) YEAR COMPLETED — PROFESSIONAL SERVICES: 2012 — CONSTRUCTION *(If applicable)*:

☑ Check if project performed with current firm

(3) BRIEF DESCRIPTION *(Brief scope, size, cost, etc.)* AND SPECIFIC ROLE

Building system retro-commissioning and energy conservation analysis.

c.

(1) TITLE AND LOCATION *(City and State)*: Key Center Bellevue, Bellevue, WA

(2) YEAR COMPLETED — PROFESSIONAL SERVICES: 20 — CONSTRUCTION *(If applicable)*:

☑ Check if project performed with current firm

(3) BRIEF DESCRIPTION *(Brief scope, size, cost, etc.)* AND SPECIFIC ROLE

Audit and Reto-commission the buildings HVAC system, 472,929 square feet. Project cost $124,000. The primary focus of this project was to increase energy performance and overall occupant comfort. Ed's main role was to manage the commissioing processes and energy analyses.

d.

(1) TITLE AND LOCATION *(City and State)*: Centralia Community College, Centralia, WA

(2) YEAR COMPLETED — PROFESSIONAL SERVICES: 2009 — CONSTRUCTION *(If applicable)*:

☑ Check if project performed with current firm

(3) BRIEF DESCRIPTION *(Brief scope, size, cost, etc.)* AND SPECIFIC ROLE

This scope of this project was 3rd party commissioning on the new science building. The price of this contract was $63,820. Ed was the commissioing agent on this project.

e.

(1) TITLE AND LOCATION *(City and State)*: Boeing 9-98, Tukwila, WA

(2) YEAR COMPLETED — PROFESSIONAL SERVICES: 2008 — CONSTRUCTION *(If applicable)*:

☑ Check if project performed with current firm

(3) BRIEF DESCRIPTION *(Brief scope, size, cost, etc.)* AND SPECIFIC ROLE

This was a 35.7 million dollar renovation for the Boeing company. Ed was the field supervisor of the commissioing activity.

E. RESUMES OF KEY PERSONNEL PROPOSED FOR THIS CONTRACT

(Complete one Section E for each key person.)

12. NAME	13. ROLE IN THIS CONTRACT	14. YEARS EXPERIENCE a. TOTAL	b. WITH CURRENT FIRM
Eric Sundby	Service Supervisor	31	14

15. FIRM NAME AND LOCATION *(City and State)*

MacDonald-Miller Facility Solutions — Seattle, WA

16. EDUCATION *(DEGREE AND SPECIALIZATION)*	17. CURRENT PROFESSIONAL REGISTRATION *(STATE AND DISCIPLINE)*
Wenatchee Valley College	Journeyman Refrigeration License, State of Washington

18. OTHER PROFESSIONAL QUALIFICATIONS *(Publications, Organizations, Training, Awards, etc.)*

RSES Refrigerant Usage Certification

19. RELEVANT PROJECTS

a.

(1) TITLE AND LOCATION *(City and State)*: Monroe School District — Monroe, WA

(2) YEAR COMPLETED — PROFESSIONAL SERVICES: ; CONSTRUCTION *(If applicable)*:

(3) BRIEF DESCRIPTION *(Brief scope, size, cost, etc.)* AND SPECIFIC ROLE — ☑ Check if project performed with current firm

Service HVAC and Boiler maintenances. Contracts ongoing. Eric manages the contracts and work with PSE on the boiler tune up rebates. Multiple campuses are managed and contracted.

b.

(1) TITLE AND LOCATION *(City and State)*: Seattle Genetics — Bothell, WA

(2) YEAR COMPLETED — PROFESSIONAL SERVICES: ; CONSTRUCTION *(If applicable)*:

(3) BRIEF DESCRIPTION *(Brief scope, size, cost, etc.)* AND SPECIFIC ROLE — ☑ Check if project performed with current firm

This contract includes service HVAC and controls contracts. Eric has managed this contract for over 10 years. This is an ongoing contract for periofic maintenance.

c.

(1) TITLE AND LOCATION *(City and State)*: University of Washington — Seattle, WA

(2) YEAR COMPLETED — PROFESSIONAL SERVICES: ; CONSTRUCTION *(If applicable)*:

(3) BRIEF DESCRIPTION *(Brief scope, size, cost, etc.)* AND SPECIFIC ROLE — ☑ Check if project performed with current firm

This work is at the Sandpoint complex and includes service, controls, and retro-commissioing work. Eric manages the HVAC service and controls maintenance contracts. He is also involved in start-up and retro-commissioning. He has been involved in 8 projects at Sandpoint. The maintenance contracts are with GVA Kidder Matthews and are ongoing.

d.

(1) TITLE AND LOCATION *(City and State)*:

(2) YEAR COMPLETED — PROFESSIONAL SERVICES: ; CONSTRUCTION *(If applicable)*:

(3) BRIEF DESCRIPTION *(Brief scope, size, cost, etc.)* AND SPECIFIC ROLE — ☐ Check if project performed with current firm

e.

(1) TITLE AND LOCATION *(City and State)*:

(2) YEAR COMPLETED — PROFESSIONAL SERVICES: ; CONSTRUCTION *(If applicable)*:

(3) BRIEF DESCRIPTION *(Brief scope, size, cost, etc.)* AND SPECIFIC ROLE — ☐ Check if project performed with current firm

E. RESUMES OF KEY PERSONNEL PROPOSED FOR THIS CONTRACT

(Complete one Section E for each key person.)

12. NAME	13. ROLE IN THIS CONTRACT	14. YEARS EXPERIENCE a. TOTAL	b. WITH CURRENT FIRM
Gary Larkin	Systems Specialist	28	13

15. FIRM NAME AND LOCATION *(City and State)*

MacDonald-Miller Facility Solutions — Seattle, WA

16. EDUCATION *(DEGREE AND SPECIALIZATION)*

Associates Degree in Automotive Technology

17. CURRENT PROFESSIONAL REGISTRATION *(STATE AND DISCIPLINE)*

18. OTHER PROFESSIONAL QUALIFICATIONS *(Publications, Organizations, Training, Awards, etc.)*

Certified ASE Master Technician, Richard-Zeta HVAC Control System Certificate of Completion & Troubleshooting, Staefa-Smart II HVAC Controls, Basic/Advanced Hydronics, Carrier WT Systems

19. RELEVANT PROJECTS

a.

(1) TITLE AND LOCATION *(City and State)*: Valley Medical Center — Kent, WA

(2) YEAR COMPLETED — PROFESSIONAL SERVICES: 2009 — CONSTRUCTION *(If applicable)*:

(3) BRIEF DESCRIPTION *(Brief scope, size, cost, etc.)* AND SPECIFIC ROLE — ✓ Check if project performed with current firm

The scope included mechanical design, construction and mechanical engineering. Gary's role was to review the mechanical deisgn, assist in constuction coordination, manage the commisioing schedule and complete commissioning process.

b.

(1) TITLE AND LOCATION *(City and State)*: Hotel 1000 — Seattle, WA

(2) YEAR COMPLETED — PROFESSIONAL SERVICES: 2007 — CONSTRUCTION *(If applicable)*:

(3) BRIEF DESCRIPTION *(Brief scope, size, cost, etc.)* AND SPECIFIC ROLE — ✓ Check if project performed with current firm

Supervisor of Start Up, Test and Balance and commissioing of 25 story, 5 Star Hotel/Condominiums.

c.

(1) TITLE AND LOCATION *(City and State)*: Northpointe Office Building — Lynwood, WA

(2) YEAR COMPLETED — PROFESSIONAL SERVICES: 2010 — CONSTRUCTION *(If applicable)*:

(3) BRIEF DESCRIPTION *(Brief scope, size, cost, etc.)* AND SPECIFIC ROLE — ✓ Check if project performed with current firm

TAB foreman for 3-story office building.

d.

(1) TITLE AND LOCATION *(City and State)*: 1521 2nd Ave — Seattle, WA

(2) YEAR COMPLETED — PROFESSIONAL SERVICES: 2009 — CONSTRUCTION *(If applicable)*:

(3) BRIEF DESCRIPTION *(Brief scope, size, cost, etc.)* AND SPECIFIC ROLE — ✓ Check if project performed with current firm

This was a 42 story condominium. Performed control system conceptualization, mechanical deisgn review, and mechanical installation inspection oversight. Performed the oversight and management of the control system installation, start-up, and testing.

e.

(1) TITLE AND LOCATION *(City and State)*: City of Bellevue — Bellevue, WA

(2) YEAR COMPLETED — PROFESSIONAL SERVICES: 2012 — CONSTRUCTION *(If applicable)*:

(3) BRIEF DESCRIPTION *(Brief scope, size, cost, etc.)* AND SPECIFIC ROLE — ✓ Check if project performed with current firm

Managed the energy analysis, project implementation and commissioning of the comprehensive energy retrofit of the facility.

E. RESUMES OF KEY PERSONNEL PROPOSED FOR THIS CONTRACT

(Complete one Section E for each key person.)

12. NAME	13. ROLE IN THIS CONTRACT	14. YEARS EXPERIENCE a. TOTAL	b. WITH CURRENT FIRM
Greg Nanadjanians	Engineer	26	20

15. FIRM NAME AND LOCATION *(City and State)*

MacDonald-Miller Facility Solutions Seattle, WA

16. EDUCATION *(DEGREE AND SPECIALIZATION)*

BS in Mechanical Engineering

17. CURRENT PROFESSIONAL REGISTRATION *(STATE AND DISCIPLINE)*

Professional Engineer (Mechanical), State of WA
Professional Engineer (Mechanical), State of CA

18. OTHER PROFESSIONAL QUALIFICATIONS *(Publications, Organizations, Training, Awards, etc.)*

LEED Accredited Professional

19. RELEVANT PROJECTS

a.

(1) TITLE AND LOCATION *(City and State)*: Corixa Seattle, WA

(2) YEAR COMPLETED — PROFESSIONAL SERVICES: | CONSTRUCTION *(If applicable)*:

(3) BRIEF DESCRIPTION *(Brief scope, size, cost, etc.)* AND SPECIFIC ROLE

50,000 sqft. lab/office renovation

✓ Check if project performed with current firm

b.

(1) TITLE AND LOCATION *(City and State)*: Institute for Systems Biology Seattle, WA

(2) YEAR COMPLETED — PROFESSIONAL SERVICES: | CONSTRUCTION *(If applicable)*:

(3) BRIEF DESCRIPTION *(Brief scope, size, cost, etc.)* AND SPECIFIC ROLE

65,000 sqft. wet lab relocation

✓ Check if project performed with current firm

c.

(1) TITLE AND LOCATION *(City and State)*: Virginia Mason- Dermatology Seattle, WA

(2) YEAR COMPLETED — PROFESSIONAL SERVICES: | CONSTRUCTION *(If applicable)*:

(3) BRIEF DESCRIPTION *(Brief scope, size, cost, etc.)* AND SPECIFIC ROLE

Complete 9th floor TI, HVAC & plumbing

✓ Check if project performed with current firm

d.

(1) TITLE AND LOCATION *(City and State)*: 4245 Roosevelt UW Medical Office Building Seattle, WA

(2) YEAR COMPLETED — PROFESSIONAL SERVICES: | CONSTRUCTION *(If applicable)*:

(3) BRIEF DESCRIPTION *(Brief scope, size, cost, etc.)* AND SPECIFIC ROLE

Complete building of 4-story MOB

✓ Check if project performed with current firm

e.

(1) TITLE AND LOCATION *(City and State)*: CDR (Xcyte Therapies) Ballard, WA

(2) YEAR COMPLETED — PROFESSIONAL SERVICES: | CONSTRUCTION *(If applicable)*:

(3) BRIEF DESCRIPTION *(Brief scope, size, cost, etc.)* AND SPECIFIC ROLE

Chemistry and biology wet labs

✓ Check if project performed with current firm

E. RESUMES OF KEY PERSONNEL PROPOSED FOR THIS CONTRACT

(Complete one Section E for each key person.)

12. NAME	13. ROLE IN THIS CONTRACT	14. YEARS EXPERIENCE a. TOTAL	b. WITH CURRENT FIRM
Greg Noel	Energy Analysis	13	13

15. FIRM NAME AND LOCATION *(City and State)*

MacDonald-Miller Facility Solutions Seattle, WA

16. EDUCATION *(DEGREE AND SPECIALIZATION)*

BS in Mechanical Engineering, Washington State University

17. CURRENT PROFESSIONAL REGISTRATION *(STATE AND DISCIPLINE)*

18. OTHER PROFESSIONAL QUALIFICATIONS *(Publications, Organizations, Training, Awards, etc.)*

LEED Accredited Professional, State of WA, HVAC Fundamentals Class, University of Washington, Air Conditioning Design Class, University of Washington

19. RELEVANT PROJECTS

a.

(1) TITLE AND LOCATION *(City and State)*: Children's Hospital Seattle, WA

(2) YEAR COMPLETED — PROFESSIONAL SERVICES: 2005 — CONSTRUCTION *(If applicable)*:

(3) BRIEF DESCRIPTION *(Brief scope, size, cost, etc.)* AND SPECIFIC ROLE

Met Park West/Partial TI

✓ Check if project performed with current firm

b.

(1) TITLE AND LOCATION *(City and State)*: Sabey Data Center "Exodus III" Tukwila, WA

(2) YEAR COMPLETED — PROFESSIONAL SERVICES: 2009 — CONSTRUCTION *(If applicable)*:

(3) BRIEF DESCRIPTION *(Brief scope, size, cost, etc.)* AND SPECIFIC ROLE

✓ Check if project performed with current firm

c.

(1) TITLE AND LOCATION *(City and State)*: McCaw Hall Seattle, WA

(2) YEAR COMPLETED — PROFESSIONAL SERVICES: 2006 — CONSTRUCTION *(If applicable)*:

(3) BRIEF DESCRIPTION *(Brief scope, size, cost, etc.)* AND SPECIFIC ROLE

Seattle International Film Festival Digital Projection Upgrades

✓ Check if project performed with current firm

d.

(1) TITLE AND LOCATION *(City and State)*: Honeywell Aerospace & Defence Redmond, WA

(2) YEAR COMPLETED — PROFESSIONAL SERVICES: 2006 — CONSTRUCTION *(If applicable)*:

(3) BRIEF DESCRIPTION *(Brief scope, size, cost, etc.)* AND SPECIFIC ROLE

Clean room, laboratory benches, process/testing workstations, office space, server room.

✓ Check if project performed with current firm

e.

(1) TITLE AND LOCATION *(City and State)*: Compass Health Everett, WA

(2) YEAR COMPLETED — PROFESSIONAL SERVICES: 2011 — CONSTRUCTION *(If applicable)*:

(3) BRIEF DESCRIPTION *(Brief scope, size, cost, etc.)* AND SPECIFIC ROLE

Conservation measures included boiler replacement, lighting retrofit, insulating boiler room water piping, and toilet and sink retrofits. Project cost $538,000, guaranteed savings amount of $23,000 annually.

✓ Check if project performed with current firm

E. RESUMES OF KEY PERSONNEL PROPOSED FOR THIS CONTRACT

(Complete one Section E for each key person.)

12. NAME	13. ROLE IN THIS CONTRACT	14. YEARS EXPERIENCE a. TOTAL	b. WITH CURRENT FIRM
Jared Sheeks	Engineer	9	9

15. FIRM NAME AND LOCATION *(City and State)*

MacDonald-Miller Facility Solutions Seattle, WA

16. EDUCATION *(DEGREE AND SPECIALIZATION)*	17. CURRENT PROFESSIONAL REGISTRATION *(STATE AND DISCIPLINE)*
BS Mechanical Engineering, California Polytechnic State University	Professional Engineer, State of California Professional Engineer, State of Washington

18. OTHER PROFESSIONAL QUALIFICATIONS *(Publications, Organizations, Training, Awards, etc.)*

LEED Accredited Professional, ASHRAE, AEE, USGBC, Certified Energy Manager.

19. RELEVANT PROJECTS

a.

(1) TITLE AND LOCATION *(City and State)*: Washington Athletic Club, Seattle, WA

(2) YEAR COMPLETED — PROFESSIONAL SERVICES: ; CONSTRUCTION *(If applicable)*: 2012

✓ Check if project performed with current firm

(3) BRIEF DESCRIPTION *(Brief scope, size, cost, etc.)* AND SPECIFIC ROLE

Energy upgrades including HVAC controls, kitchen ventilation and insulation.

b.

(1) TITLE AND LOCATION *(City and State)*: City of Federal Way, City Hall, Federal Way, WA

(2) YEAR COMPLETED — PROFESSIONAL SERVICES: ; CONSTRUCTION *(If applicable)*: 2012

✓ Check if project performed with current firm

(3) BRIEF DESCRIPTION *(Brief scope, size, cost, etc.)* AND SPECIFIC ROLE

Mechanical and Energy upgrades including mechanical equipment replacement, and HVAC controls upgrades.

c.

(1) TITLE AND LOCATION *(City and State)*: City of Bellevue, City Hall, Bellevue, WA

(2) YEAR COMPLETED — PROFESSIONAL SERVICES: ; CONSTRUCTION *(If applicable)*: 2012

✓ Check if project performed with current firm

(3) BRIEF DESCRIPTION *(Brief scope, size, cost, etc.)* AND SPECIFIC ROLE

Energy upgrades including HVAC controls, and interior/exterior lighting.

d.

(1) TITLE AND LOCATION *(City and State)*: 1521 Second Ave, Seattle, WA

(2) YEAR COMPLETED — PROFESSIONAL SERVICES: 2009; CONSTRUCTION *(If applicable)*: 2008

✓ Check if project performed with current firm

(3) BRIEF DESCRIPTION *(Brief scope, size, cost, etc.)* AND SPECIFIC ROLE

Deisgn/build of Luxury condomimims. The size was 47 stories at 400,000 square feet with an 8 story garage. The deisgn for this project lasted 3 years. Jared's role in the project was the lead mechanical engineer and construction administration. This building is in the process of receiving LEED Silver Certification.

e.

(1) TITLE AND LOCATION *(City and State)*: Hotel 1000, Seattle, WA

(2) YEAR COMPLETED — PROFESSIONAL SERVICES: 2006; CONSTRUCTION *(If applicable)*:

✓ Check if project performed with current firm

(3) BRIEF DESCRIPTION *(Brief scope, size, cost, etc.)* AND SPECIFIC ROLE

Design/build of high-end hotel and condominium tower. The building is 24 stories tall and 245,000 square feet .The first few floors included amenities such as a kitchen and restaurant. Jared's role on thi sproject was design engineer and construction administration.

E. RESUMES OF KEY PERSONNEL PROPOSED FOR THIS CONTRACT

(Complete one Section E for each key person.)

12. NAME	13. ROLE IN THIS CONTRACT	14. YEARS EXPERIENCE a. TOTAL	b. WITH CURRENT FIRM
Jeremy Richmond	Building Performance Specialist	15	1

15. FIRM NAME AND LOCATION *(City and State)*

MacDonald-Miller Facility Solutions — Seattle, WA

16. EDUCATION *(DEGREE AND SPECIALIZATION)*

BS in Business Administration, Major in Management

17. CURRENT PROFESSIONAL REGISTRATION *(STATE AND DISCIPLINE)*

WA 06A Electrical Licenses-RICHMJS927D4
WA 07 Electrical License-RICHMJS897CZ

18. OTHER PROFESSIONAL QUALIFICATIONS *(Publications, Organizations, Training, Awards, etc.)*

Certified Energy Manager, LEED AP+OM,

19. RELEVANT PROJECTS

a.

(1) TITLE AND LOCATION *(City and State)*: Seattle Art Museum — Seattle, WA

(2) YEAR COMPLETED — PROFESSIONAL SERVICES: 2012 — CONSTRUCTION *(If applicable)*:

☑ Check if project performed with current firm

(3) BRIEF DESCRIPTION *(Brief scope, size, cost, etc.)* AND SPECIFIC ROLE

Senior Performance Specialist- responsible for identifying energy related proejcts. Identified HVAC control optimization opportunities, HVAC sequence of operation changes, future capital projects, lighting and plumbing opportunities. Responsible for writing Investment Grade Audits and presenting to owners. Total project cost:$825,000.

b.

(1) TITLE AND LOCATION *(City and State)*: Washington Athletic Club — Seattle, WA

(2) YEAR COMPLETED — PROFESSIONAL SERVICES: 2012 — CONSTRUCTION *(If applicable)*: 2012

☑ Check if project performed with current firm

(3) BRIEF DESCRIPTION *(Brief scope, size, cost, etc.)* AND SPECIFIC ROLE

Senior Performance Specialist responsible for the monthly perfromance of energy related opportunities identified in the Investment Grade Audit. Works with the building facilities & staff to ensure the HVAC systems are perfoming to the best of their ability. Total project cost $780,000.

c.

(1) TITLE AND LOCATION *(City and State)*: Russell Investments Center — Seattle, WA

(2) YEAR COMPLETED — PROFESSIONAL SERVICES: 2012 — CONSTRUCTION *(If applicable)*: 2006

☐ Check if project performed with current firm

(3) BRIEF DESCRIPTION *(Brief scope, size, cost, etc.)* AND SPECIFIC ROLE

Performance Specialist responsible for all energy related projects both capital and R&M. This included stairwell lighting, emergency lighting, controls optimization, garage lighting, electric hot water heaters, low flow urinals and faucets. 1.2M sqft. 42 story high rise, with an operations budget in excess of $2.5M. LEED Plantinum and Energy Star Score of 100.

d.

(1) TITLE AND LOCATION *(City and State)*: George F. Russell Hall — Seattle, WA

(2) YEAR COMPLETED — PROFESSIONAL SERVICES: 2011 — CONSTRUCTION *(If applicable)*:

☐ Check if project performed with current firm

(3) BRIEF DESCRIPTION *(Brief scope, size, cost, etc.)* AND SPECIFIC ROLE

Senior Performance Specialist Responsible for all energy related projects, both capital and R&M. Worked with Seattle City Light to finalize incentive for lighting projects and controls optimization. 50,000 sqft. multi-use office building with an operations budget in excess of $200,000.

e.

(1) TITLE AND LOCATION *(City and State)*: Swedish Orthopedic Institute — Seattle, WA

(2) YEAR COMPLETED — PROFESSIONAL SERVICES: 2011 — CONSTRUCTION *(If applicable)*:

☐ Check if project performed with current firm

(3) BRIEF DESCRIPTION *(Brief scope, size, cost, etc.)* AND SPECIFIC ROLE

Senior Performance Specialist responsible for all energy related projects, both capital and R&M. Worked with hospital facilities staff to ensure all space lighting and HVAC controls optimization. Reduced EUI to a score of 48. 48,000 sqft. commercial condominium in a Medical Office Building with an operations budget in excess of $200,000.

E. RESUMES OF KEY PERSONNEL PROPOSED FOR THIS CONTRACT

(Complete one Section E for each key person.)

12. NAME	13. ROLE IN THIS CONTRACT	14. YEARS EXPERIENCE a. TOTAL	b. WITH CURRENT FIRM
Lindsey Andrews	Controls Supervisor	5	5

15. FIRM NAME AND LOCATION *(City and State)*

MacDonald-Miller Facility Solutions — Seattle, WA

16. EDUCATION *(DEGREE AND SPECIALIZATION)*

BS Mechanical Engineering, University of Wyoming
Naval Nuclear Power School, Charleston, SC
Naval Leadership and Submarine Operations, Groton, CT
Nuclear Propulsion Engineer Qualified

17. CURRENT PROFESSIONAL REGISTRATION *(STATE AND DISCIPLINE)*

18. OTHER PROFESSIONAL QUALIFICATIONS *(Publications, Organizations, Training, Awards, etc.)*

19. RELEVANT PROJECTS

a.

(1) TITLE AND LOCATION *(City and State)*: Washington Square — Bellevue, WA

(2) YEAR COMPLETED — PROFESSIONAL SERVICES: 2009 — CONSTRUCTION *(If applicable)*:

✓ Check if project performed with current firm

(3) BRIEF DESCRIPTION *(Brief scope, size, cost, etc.)* AND SPECIFIC ROLE

Two 25 story condo towers/4 story garage

b.

(1) TITLE AND LOCATION *(City and State)*: Snoqualmie Casino — Snoqualmie, WA

(2) YEAR COMPLETED — PROFESSIONAL SERVICES: 2009 — CONSTRUCTION *(If applicable)*:

✓ Check if project performed with current firm

(3) BRIEF DESCRIPTION *(Brief scope, size, cost, etc.)* AND SPECIFIC ROLE

165,000 sf cafeteria, gaming floor and office spaces.

c.

(1) TITLE AND LOCATION *(City and State)*: Shoreline Civic Center — Shoreline, WA

(2) YEAR COMPLETED — PROFESSIONAL SERVICES: 2009 — CONSTRUCTION *(If applicable)*:

✓ Check if project performed with current firm

(3) BRIEF DESCRIPTION *(Brief scope, size, cost, etc.)* AND SPECIFIC ROLE

67,000 sf, 4 stories, office building and council chambers, LEED project.

d.

(1) TITLE AND LOCATION *(City and State)*: City of Bellevue, City Hall — Bellevue, WA

(2) YEAR COMPLETED — PROFESSIONAL SERVICES: 2012 — CONSTRUCTION *(If applicable)*:

✓ Check if project performed with current firm

(3) BRIEF DESCRIPTION *(Brief scope, size, cost, etc.)* AND SPECIFIC ROLE

Energy upgrades including HVAC controls, and interior/exterior lighting. Lindsey's role was controls oversite.

e.

(1) TITLE AND LOCATION *(City and State)*: City of Federal Way City Hall — Federal Way, WA

(2) YEAR COMPLETED — PROFESSIONAL SERVICES: 2012 — CONSTRUCTION *(If applicable)*:

✓ Check if project performed with current firm

(3) BRIEF DESCRIPTION *(Brief scope, size, cost, etc.)* AND SPECIFIC ROLE

Mechanical and Energy upgrades included mechanical equipment replacement, and HVAC controls upgrades. Lindsey's role was controls oversite.

E. RESUMES OF KEY PERSONNEL PROPOSED FOR THIS CONTRACT

(Complete one Section E for each key person.)

12. NAME	13. ROLE IN THIS CONTRACT	14. YEARS EXPERIENCE	
		a. TOTAL	b. WITH CURRENT FIRM
Marty Loft	Systems Specialist	45	27

15. FIRM NAME AND LOCATION *(City and State)*

MacDonald-Miller Facility Solutions Seattle, WA

16. EDUCATION *(DEGREE AND SPECIALIZATION)*

Associate in Technical Arts Degree- Energy Management

17. CURRENT PROFESSIONAL REGISTRATION *(STATE AND DISCIPLINE)*

18. OTHER PROFESSIONAL QUALIFICATIONS *(Publications, Organizations, Training, Awards, etc.)*

ASHRAE, NEEB, PNEBB, Certified by National Environmental Balancing Bureau: Air/Hydronic Environmental Systems, Sound & Vibration Testing, Building Systems Commissioning

19. RELEVANT PROJECTS

a.

(1) TITLE AND LOCATION *(City and State)*: Renaissance Hotel Seattle, WA

(2) YEAR COMPLETED — PROFESSIONAL SERVICES: ; CONSTRUCTION *(If applicable)*:

(3) BRIEF DESCRIPTION *(Brief scope, size, cost, etc.)* AND SPECIFIC ROLE — ✓ Check if project performed with current firm

Performed energy audit; in process of installing recommended ECMs; heat revovery wheels & VFDs for (2) exhaust/make-up air systems; laundry wash water reclaim system; kitched hood VAV systems, domestic water pump upgrade to VFD; control supgrade; garage lighting upgrade.

b.

(1) TITLE AND LOCATION *(City and State)*: Columbia Center Seattle, WA

(2) YEAR COMPLETED — PROFESSIONAL SERVICES: ; CONSTRUCTION *(If applicable)*:

(3) BRIEF DESCRIPTION *(Brief scope, size, cost, etc.)* AND SPECIFIC ROLE — ✓ Check if project performed with current firm

Energy Uprade. Install VFDs for (8) condenser water pumps; water balance (6) cooling towers; install sequencers for (5) large electric condenser loop water heaters; Upcoming work: automate heat share condenser water system; automate (4) heat pump loop condenser water pumps.

c.

(1) TITLE AND LOCATION *(City and State)*:

(2) YEAR COMPLETED — PROFESSIONAL SERVICES: ; CONSTRUCTION *(If applicable)*:

(3) BRIEF DESCRIPTION *(Brief scope, size, cost, etc.)* AND SPECIFIC ROLE — ☐ Check if project performed with current firm

d.

(1) TITLE AND LOCATION *(City and State)*:

(2) YEAR COMPLETED — PROFESSIONAL SERVICES: ; CONSTRUCTION *(If applicable)*:

(3) BRIEF DESCRIPTION *(Brief scope, size, cost, etc.)* AND SPECIFIC ROLE — ☐ Check if project performed with current firm

e.

(1) TITLE AND LOCATION *(City and State)*:

(2) YEAR COMPLETED — PROFESSIONAL SERVICES: ; CONSTRUCTION *(If applicable)*:

(3) BRIEF DESCRIPTION *(Brief scope, size, cost, etc.)* AND SPECIFIC ROLE — ☐ Check if project performed with current firm

E. RESUMES OF KEY PERSONNEL PROPOSED FOR THIS CONTRACT

(Complete one Section E for each key person.)

12. NAME	13. ROLE IN THIS CONTRACT	14. YEARS EXPERIENCE a. TOTAL	b. WITH CURRENT FIRM
Pat Hein	Controls Technician	27	13

15. FIRM NAME AND LOCATION *(City and State)*

MacDonald-Miller Facility Solutions Seattle, WA 98106

16. EDUCATION *(DEGREE AND SPECIALIZATION)*

17. CURRENT PROFESSIONAL REGISTRATION *(STATE AND DISCIPLINE)*

Certified• Electrician• limited• Energy,• WA•
Certified• Refrigeration• Journeyman,• WA•
Certified• Electrical• Administrator• HVAC/R

18. OTHER PROFESSIONAL QUALIFICATIONS *(Publications, Organizations, Training, Awards, etc.)*

TABB• Certification• Class•
Sheetmental• Workers• Local• #66• Certified• ABB• VFD• Start• up•

19. RELEVANT PROJECTS

a.

(1) TITLE AND LOCATION *(City and State)*: Portland Community College, Portland, OR

(2) YEAR COMPLETED — PROFESSIONAL SERVICES: 2012 — CONSTRUCTION *(If applicable)*:

(3) BRIEF DESCRIPTION *(Brief scope, size, cost, etc.)* AND SPECIFIC ROLE — ✓ Check if project performed with current firm

28 multi-story buildings on 6 campuses. Controls conversion to Honeywell AX. Controls Supervisor services performed.

b.

(1) TITLE AND LOCATION *(City and State)*: Hyatt Regency, Bellevue, WA

(2) YEAR COMPLETED — PROFESSIONAL SERVICES: 2010 — CONSTRUCTION *(If applicable)*:

(3) BRIEF DESCRIPTION *(Brief scope, size, cost, etc.)* AND SPECIFIC ROLE — ✓ Check if project performed with current firm

New construction, 20-story Tower / 351 guest rooms / 5 levels of parking garage / chiller plant. Start-up, Controls, and Commissioning Supervisor services performed.

c.

(1) TITLE AND LOCATION *(City and State)*: Lincoln Square Office Tower, Bellevue, WA

(2) YEAR COMPLETED — PROFESSIONAL SERVICES: 2008 — CONSTRUCTION *(If applicable)*:

(3) BRIEF DESCRIPTION *(Brief scope, size, cost, etc.)* AND SPECIFIC ROLE — ✓ Check if project performed with current firm

New construction, 28-story Office Tower. Start-up, Controls, and Commissioning Supervisor services performed.

d.

(1) TITLE AND LOCATION *(City and State)*: Lincoln Square, Bellevue, WA

(2) YEAR COMPLETED — PROFESSIONAL SERVICES: 2007 — CONSTRUCTION *(If applicable)*:

(3) BRIEF DESCRIPTION *(Brief scope, size, cost, etc.)* AND SPECIFIC ROLE — ✓ Check if project performed with current firm

New construction, 42-story Hotel / Condo tower / 3 levels retail, and 5 levels of parking garage. Start-up, Controls, and Commissioning Supervisor services performed.

e.

(1) TITLE AND LOCATION *(City and State)*: Port of Seattle STS, Seattle, WA

(2) YEAR COMPLETED — PROFESSIONAL SERVICES: 2006 — CONSTRUCTION *(If applicable)*:

(3) BRIEF DESCRIPTION *(Brief scope, size, cost, etc.)* AND SPECIFIC ROLE — ✓ Check if project performed with current firm

TI job which included complete HVAC Mechanical and Controls upgrade of existing train tunnel fire / smoke control ventilation system. Start-up, Controls, and Commissioning services performed.

E. RESUMES OF KEY PERSONNEL PROPOSED FOR THIS CONTRACT

(Complete one Section E for each key person.)

12. NAME	13. ROLE IN THIS CONTRACT	14. YEARS EXPERIENCE a. TOTAL	b. WITH CURRENT FIRM
Ron Landberg	TAB & Commissioning Supervisor	17	17

15. FIRM NAME AND LOCATION *(City and State)*

MacDonald-Miller Facility Solutions — Seattle, WA

16. EDUCATION *(DEGREE AND SPECIALIZATION)*

University of Washington
Western Washington JATC Service Apprenticeship

17. CURRENT PROFESSIONAL REGISTRATION *(STATE AND DISCIPLINE)*

WA State Electrical License# LANDBR*016PQ

18. OTHER PROFESSIONAL QUALIFICATIONS *(Publications, Organizations, Training, Awards, etc.)*

TABB & NEBB Certified Technician

19. RELEVANT PROJECTS

a.

(1) TITLE AND LOCATION *(City and State)*: Microsoft Augusta & Building 28 — Redmond, WA

(2) YEAR COMPLETED — PROFESSIONAL SERVICES: 2009 — CONSTRUCTION *(If applicable)*:

(3) BRIEF DESCRIPTION *(Brief scope, size, cost, etc.)* AND SPECIFIC ROLE — ✓ Check if project performed with current firm

Mechanical commissioning agent

b.

(1) TITLE AND LOCATION *(City and State)*: Microsoft Building 88 — Redmond, WA

(2) YEAR COMPLETED — PROFESSIONAL SERVICES: 2010 — CONSTRUCTION *(If applicable)*:

(3) BRIEF DESCRIPTION *(Brief scope, size, cost, etc.)* AND SPECIFIC ROLE — ✓ Check if project performed with current firm

250,000 sqft. building, LEED CI Gold, Mechanical commissioning agent.

c.

(1) TITLE AND LOCATION *(City and State)*: City Center Plaza — Seattle, WA

(2) YEAR COMPLETED — PROFESSIONAL SERVICES: 2010 — CONSTRUCTION *(If applicable)*:

(3) BRIEF DESCRIPTION *(Brief scope, size, cost, etc.)* AND SPECIFIC ROLE — ✓ Check if project performed with current firm

27 story high-rise, chilled rooftop VAV system with fan wall technology. LEED CS Gold, Mechanical commissioning agent.

d.

(1) TITLE AND LOCATION *(City and State)*: King County Goat Hill Office Building — Seattle, WA

(2) YEAR COMPLETED — PROFESSIONAL SERVICES: 2010 — CONSTRUCTION *(If applicable)*:

(3) BRIEF DESCRIPTION *(Brief scope, size, cost, etc.)* AND SPECIFIC ROLE — ✓ Check if project performed with current firm

296,000 sqft., 13 story, storm water filtration vault, (2) 1500-ton rain water storage tanks for irrigation, over 40% domestic water savings. LEED CS Gold, Mechanical commissioning agent.

e.

(1) TITLE AND LOCATION *(City and State)*: Edna Lucille Goodrich Building — Tumwater, WA

(2) YEAR COMPLETED — PROFESSIONAL SERVICES: 2007 — CONSTRUCTION *(If applicable)*:

(3) BRIEF DESCRIPTION *(Brief scope, size, cost, etc.)* AND SPECIFIC ROLE — ✓ Check if project performed with current firm

Four stories and 210,759 sqft. Energy savings is over 37% per year. Water consumption reduced by 44%, waste water reduced by over 50%. LEED Gold. Mechanical commissioning agent.

E. RESUMES OF KEY PERSONNEL PROPOSED FOR THIS CONTRACT

(Complete one Section E for each key person.)

12. NAME	13. ROLE IN THIS CONTRACT	14. YEARS EXPERIENCE a. TOTAL	b. WITH CURRENT FIRM
Stephen Wilson	Energy Operations Manager	24	24

15. FIRM NAME AND LOCATION *(City and State)*

MacDonald-Miller Facility Solutions Seattle, WA

16. EDUCATION *(DEGREE AND SPECIALIZATION)*

University of Washington, BS in Construction Management

17. CURRENT PROFESSIONAL REGISTRATION *(STATE AND DISCIPLINE)*

18. OTHER PROFESSIONAL QUALIFICATIONS *(Publications, Organizations, Training, Awards, etc.)*

MCA Certified Mechanical, Project Manager Level III
Fails Management Institute, Construction Supervisory Training

19. RELEVANT PROJECTS

a.

(1) TITLE AND LOCATION *(City and State)*: Washington Athletic Club, Seattle, WA

(2) YEAR COMPLETED — PROFESSIONAL SERVICES: ; CONSTRUCTION *(If applicable)*: 2012

✓ Check if project performed with current firm

(3) BRIEF DESCRIPTION *(Brief scope, size, cost, etc.)* AND SPECIFIC ROLE

Energy upgrades including HVAC controls, kitchen ventilation and insulation. Stephens role was operations oversite.

b.

(1) TITLE AND LOCATION *(City and State)*: City of Federal Way, City Hall, Federal Way, WA

(2) YEAR COMPLETED — PROFESSIONAL SERVICES: ; CONSTRUCTION *(If applicable)*: 2012

✓ Check if project performed with current firm

(3) BRIEF DESCRIPTION *(Brief scope, size, cost, etc.)* AND SPECIFIC ROLE

Mechanical and Energy upgrades include mechanical equipment replacement, and HVAC controls upgrades. Stephens role was operations oversite.

c.

(1) TITLE AND LOCATION *(City and State)*: City of Bellevue, City Hall, Bellevue, WA

(2) YEAR COMPLETED — PROFESSIONAL SERVICES: ; CONSTRUCTION *(If applicable)*: 2012

✓ Check if project performed with current firm

(3) BRIEF DESCRIPTION *(Brief scope, size, cost, etc.)* AND SPECIFIC ROLE

Energy upgrades including HVAC controls, and interior/exterior lighting. Stephens role was operations oversite.

d.

(1) TITLE AND LOCATION *(City and State)*: West 8th Office Tower, Seattle, WA

(2) YEAR COMPLETED — PROFESSIONAL SERVICES: ; CONSTRUCTION *(If applicable)*: 2009

✓ Check if project performed with current firm

(3) BRIEF DESCRIPTION *(Brief scope, size, cost, etc.)* AND SPECIFIC ROLE

27 downtown highrise shell & core mechanical, plumbing and HVAC control systems. Stephens role was Senior Project Manager.

e.

(1) TITLE AND LOCATION *(City and State)*: Lincoln Square, Bellevue, WA

(2) YEAR COMPLETED — PROFESSIONAL SERVICES: ; CONSTRUCTION *(If applicable)*: 2005

✓ Check if project performed with current firm

(3) BRIEF DESCRIPTION *(Brief scope, size, cost, etc.)* AND SPECIFIC ROLE

2,400,000 sf. Hotel/Condominium/Retail complex. Stephens role was Senior Project Manager.

E. RESUMES OF KEY PERSONNEL PROPOSED FOR THIS CONTRACT

(Complete one Section E for each key person.)

12. NAME	13. ROLE IN THIS CONTRACT	14. YEARS EXPERIENCE a. TOTAL	b. WITH CURRENT FIRM
Gary Wallace	Engineer	25	17

15. FIRM NAME AND LOCATION *(City and State)*

MacDonald-Miller Facility Solutions Seattle, WA

16. EDUCATION *(DEGREE AND SPECIALIZATION)*	17. CURRENT PROFESSIONAL REGISTRATION *(STATE AND DISCIPLINE)*
Bachelor of Science- Mechanical Engineering	Professional Engineer, Mechanical Engineering WA State

18. OTHER PROFESSIONAL QUALIFICATIONS *(Publications, Organizations, Training, Awards, etc.)*

ASHRAE

19. RELEVANT PROJECTS

a.

(1) TITLE AND LOCATION *(City and State)*: 225 South King Street Seattle, WA

(2) YEAR COMPLETED — PROFESSIONAL SERVICES: 2012 — CONSTRUCTION *(If applicable)*:

(3) BRIEF DESCRIPTION *(Brief scope, size, cost, etc.)* AND SPECIFIC ROLE — ✓ Check if project performed with current firm

25 story high rise hotel and future office building; energy comparison for hotel and podium only and did not include the office high-rise. Compared standard gas fired boilers to water-to-water energy revovery. Compared standard gas fired boilers to reclaim heat from sewage.

b.

(1) TITLE AND LOCATION *(City and State)*: City Center Bellevue Bellevue, WA

(2) YEAR COMPLETED — PROFESSIONAL SERVICES: — CONSTRUCTION *(If applicable)*:

(3) BRIEF DESCRIPTION *(Brief scope, size, cost, etc.)* AND SPECIFIC ROLE — ✓ Check if project performed with current firm

This was a 535,000 square foot project. Gary's main role on this project was to complete the energy calculations. It was a core and shell base building for LEED.

c.

(1) TITLE AND LOCATION *(City and State)*: Redmond Town Hall Redmond, WA

(2) YEAR COMPLETED — PROFESSIONAL SERVICES: — CONSTRUCTION *(If applicable)*:

(3) BRIEF DESCRIPTION *(Brief scope, size, cost, etc.)* AND SPECIFIC ROLE — ✓ Check if project performed with current firm

This project was a base building for LEED. Gary's main role was to complete energy calculations.

d.

(1) TITLE AND LOCATION *(City and State)*: Fifth Avenue Plaza Seattle, WA

(2) YEAR COMPLETED — PROFESSIONAL SERVICES: — CONSTRUCTION *(If applicable)*:

(3) BRIEF DESCRIPTION *(Brief scope, size, cost, etc.)* AND SPECIFIC ROLE — ✓ Check if project performed with current firm

This project was a 32 story high-rise building. Gary's role was to complete the energy calculation and chiller design and layout. The calculations were for increased efficiency for Seattle City Light.

e.

(1) TITLE AND LOCATION *(City and State)*: Century Square Pony Chiller Replacement Seattle, WA

(2) YEAR COMPLETED — PROFESSIONAL SERVICES: — CONSTRUCTION *(If applicable)*:

(3) BRIEF DESCRIPTION *(Brief scope, size, cost, etc.)* AND SPECIFIC ROLE — ✓ Check if project performed with current firm

This project was a 35 story high-rise project. Gary's role was energy calculation and chiller design layout. The calculations were for increased efficiency for Seattle City Light.

E. RESUMES OF KEY PERSONNEL PROPOSED FOR THIS CONTRACT

(Complete one Section E for each key person.)

12. NAME	13. ROLE IN THIS CONTRACT	14. YEARS EXPERIENCE a. TOTAL	b. WITH CURRENT FIRM
John Van Hersett	Systems Specialist	17	1

15. FIRM NAME AND LOCATION *(City and State)*

MacDonald-Miller Facility Solutions Seattle, WA

16. EDUCATION *(DEGREE AND SPECIALIZATION)*

Bachelors of Arts Business Administration / Management Information Systems

17. CURRENT PROFESSIONAL REGISTRATION *(STATE AND DISCIPLINE)*

18. OTHER PROFESSIONAL QUALIFICATIONS *(Publications, Organizations, Training, Awards, etc.)*

Certified Energy Manager - CEM, Association of Energy Engineers
Certified Measurement and Verification Professional – CMVP, Association of Energy Engineers

19. RELEVANT PROJECTS

a.

(1) TITLE AND LOCATION *(City and State)*: REI Rainier/Smith Buildings Controls Upgrade Kent, WA

(2) YEAR COMPLETED — PROFESSIONAL SERVICES: 2012 — CONSTRUCTION *(If applicable)*: 2012

(3) BRIEF DESCRIPTION *(Brief scope, size, cost, etc.)* AND SPECIFIC ROLE — ✓ Check if project performed with current firm

Replace failing building controls, integrate to exsisting HVAC equipment. Provide new web based front end and optimize building performance. $133,167 - Project Manager

b.

(1) TITLE AND LOCATION *(City and State)*: Fairmont Olympic IGA Seattle, WA

(2) YEAR COMPLETED — PROFESSIONAL SERVICES: 2012 — CONSTRUCTION *(If applicable)*:

(3) BRIEF DESCRIPTION *(Brief scope, size, cost, etc.)* AND SPECIFIC ROLE — ✓ Check if project performed with current firm

Investment Grade Audit of 635 room four star hotel resulting in a $4,055,121 conservation project with a guaranteed energy savings of 13,766,981.48kBtu/Yr. Construction start date in 2013. - Energy Engineer / Project Manager

c.

(1) TITLE AND LOCATION *(City and State)*: Highline Community College IGA DesMoines, WA

(2) YEAR COMPLETED — PROFESSIONAL SERVICES: 2012 — CONSTRUCTION *(If applicable)*: 2013

(3) BRIEF DESCRIPTION *(Brief scope, size, cost, etc.)* AND SPECIFIC ROLE — ✓ Check if project performed with current firm

Washington State Department of Commerce 2012 Energy Efficiency Grants for Higher Education - IGA resulting in a $3,262,447 conservation project award with a guaranteed energy savings of 2,570,145 kBtu/Yr. Includes local utility incentives, state and federal grant monies. - Energy Engineer / Project Manger

d.

(1) TITLE AND LOCATION *(City and State)*: Airway Heights Correction Center Airway Heights, WA

(2) YEAR COMPLETED — PROFESSIONAL SERVICES: — CONSTRUCTION *(If applicable)*: 2013

(3) BRIEF DESCRIPTION *(Brief scope, size, cost, etc.)* AND SPECIFIC ROLE — ✓ Check if project performed with current firm

Replace failing building controls, integrate to exsisting HVAC equipment. Provide new web based front end and optimize building performance campus wide 28 buildings total in correction center facility. $646,497 - Project Manager

e.

(1) TITLE AND LOCATION *(City and State)*: Highline Community College IGA DesMoines, WA

(2) YEAR COMPLETED — PROFESSIONAL SERVICES: 2013 — CONSTRUCTION *(If applicable)*:

(3) BRIEF DESCRIPTION *(Brief scope, size, cost, etc.)* AND SPECIFIC ROLE — ✓ Check if project performed with current firm

Round Two - Washington State Department of Commerce 2012 Energy Efficiency Grants for Higher Education - IGA proposing a $787,509 conservation project with a guaranteed energy savings of 4,388,393kBtu/Yr. Includes local utility incentives, state and federal grant monies. - Energy Engineer / Project Manger

E. RESUMES OF KEY PERSONNEL PROPOSED FOR THIS CONTRACT

(Complete one Section E for each key person.)

12. NAME	13. ROLE IN THIS CONTRACT	14. YEARS EXPERIENCE a. TOTAL	b. WITH CURRENT FIRM
Perry England	Building Performance VP	23	6

15. FIRM NAME AND LOCATION *(City and State)*

MacDonald-Miller Facility Solutions Seattle, WA

16. EDUCATION *(DEGREE AND SPECIALIZATION)*

University of Tennessee, BS Mechanical Engineering

17. CURRENT PROFESSIONAL REGISTRATION *(STATE AND DISCIPLINE)*

18. OTHER PROFESSIONAL QUALIFICATIONS *(Publications, Organizations, Training, Awards, etc.)*

Association of Energy Engineers (AAE), American Society of Heating, Piping and Refrigeration Engineers (ASHRAE) Mechanical Contractors Association (MCA), Design Build Institute of America (DBIA), Northwest Energy Efficiency Council

19. RELEVANT PROJECTS

a.

(1) TITLE AND LOCATION *(City and State)*: University of Washington, Research&Tech Bldg Seattle, WA

(2) YEAR COMPLETED — PROFESSIONAL SERVICES: 2006 — CONSTRUCTION *(If applicable)*:

(3) BRIEF DESCRIPTION *(Brief scope, size, cost, etc.)* AND SPECIFIC ROLE — ✓ Check if project performed with current firm

Building performance modeling, Energy modeling, Performance-based contracting, Business Case Justification of infastructure renewal and capital budget expenitures, lifecyle costing, technology application, engineering, installation and managment.

b.

(1) TITLE AND LOCATION *(City and State)*: Vancouver General Hospital Vancouver, BC

(2) YEAR COMPLETED — PROFESSIONAL SERVICES: 2001 — CONSTRUCTION *(If applicable)*:

(3) BRIEF DESCRIPTION *(Brief scope, size, cost, etc.)* AND SPECIFIC ROLE — ✓ Check if project performed with current firm

Job was performed in the Academic Ambulatory Care wing of the hospital. Perrys role was engineering, installation and management of the project.

c.

(1) TITLE AND LOCATION *(City and State)*: Sea World Orlando, Fl

(2) YEAR COMPLETED — PROFESSIONAL SERVICES: 1998 — CONSTRUCTION *(If applicable)*:

(3) BRIEF DESCRIPTION *(Brief scope, size, cost, etc.)* AND SPECIFIC ROLE — ✓ Check if project performed with current firm

The scope of this job was Modernization of the Centeral Utility Plant. Perry's role was engineering, installation and management.

d.

(1) TITLE AND LOCATION *(City and State)*: Washington Athletic Club Seattle, WA

(2) YEAR COMPLETED — PROFESSIONAL SERVICES: 2012 — CONSTRUCTION *(If applicable)*:

(3) BRIEF DESCRIPTION *(Brief scope, size, cost, etc.)* AND SPECIFIC ROLE — ✓ Check if project performed with current firm

Energy upgrades including HVAC controls, kitchen ventilation and insulation.

e.

(1) TITLE AND LOCATION *(City and State)*: Highline Community College Des Moines, WA

(2) YEAR COMPLETED — PROFESSIONAL SERVICES: 2012 — CONSTRUCTION *(If applicable)*:

(3) BRIEF DESCRIPTION *(Brief scope, size, cost, etc.)* AND SPECIFIC ROLE — ✓ Check if project performed with current firm

Washington State Department of Commerce 2012 Energy Efficiency Grants for Higher Education- IGA resulted in a $3,262,447 conservation project award with a guaranteed energy savings of 2,570,145 kBtu/Yr.

E. RESUMES OF KEY PERSONNEL PROPOSED FOR THIS CONTRACT

(Complete one Section E for each key person.)

12. NAME	13. ROLE IN THIS CONTRACT	14. YEARS EXPERIENCE a. TOTAL	b. WITH CURRENT FIRM
Dave Martinson	Systems Specialist	15	15

15. FIRM NAME AND LOCATION *(City and State)*

MacDonald-Miller Facility Solutions Seattle, WA

16. EDUCATION *(DEGREE AND SPECIALIZATION)*

Associates of Applied Sciences Degree in HVAC Design
Associates in Arts & Sciences

17. CURRENT PROFESSIONAL REGISTRATION *(STATE AND DISCIPLINE)*

18. OTHER PROFESSIONAL QUALIFICATIONS *(Publications, Organizations, Training, Awards, etc.)*

MCA Certified Mechanical Project Manager, Level 2, Enercon Data Control Workshop, Trane Regional Unitary Service Seminar, Robertshaw Pneumatic Control Training Seminar

19. RELEVANT PROJECTS

a.

(1) TITLE AND LOCATION *(City and State)*: Boeing Commercial Airplane Group, Renton, WA

(2) YEAR COMPLETED — PROFESSIONAL SERVICES: 2007 — CONSTRUCTION *(If applicable)*:

(3) BRIEF DESCRIPTION *(Brief scope, size, cost, etc.)* AND SPECIFIC ROLE — ☑ Check if project performed with current firm

Mechanical Systems Commissioning, administrator for headquarters building.

b.

(1) TITLE AND LOCATION *(City and State)*: Darigold, Sunnyside, WA

(2) YEAR COMPLETED — PROFESSIONAL SERVICES: 2007 — CONSTRUCTION *(If applicable)*:

(3) BRIEF DESCRIPTION *(Brief scope, size, cost, etc.)* AND SPECIFIC ROLE — ☑ Check if project performed with current firm

Cheese plant, packaging and cold storage, offices and visitors' area and store.

c.

(1) TITLE AND LOCATION *(City and State)*: Western State Hospital, Steilacoom, WA

(2) YEAR COMPLETED — PROFESSIONAL SERVICES: 2010 — CONSTRUCTION *(If applicable)*:

(3) BRIEF DESCRIPTION *(Brief scope, size, cost, etc.)* AND SPECIFIC ROLE — ☑ Check if project performed with current firm

Included buildings 17, 18, 19.

d.

(1) TITLE AND LOCATION *(City and State)*: City of Federal Way, City Hall, Federal Way, WA

(2) YEAR COMPLETED — PROFESSIONAL SERVICES: — CONSTRUCTION *(If applicable)*:

(3) BRIEF DESCRIPTION *(Brief scope, size, cost, etc.)* AND SPECIFIC ROLE — ☑ Check if project performed with current firm

Mechanical and Energy ugrades including mechanical equipment replacement, and HVAC controls upgrades.

e.

(1) TITLE AND LOCATION *(City and State)*:

(2) YEAR COMPLETED — PROFESSIONAL SERVICES: — CONSTRUCTION *(If applicable)*:

(3) BRIEF DESCRIPTION *(Brief scope, size, cost, etc.)* AND SPECIFIC ROLE — ☐ Check if project performed with current firm

E. RESUMES OF KEY PERSONNEL PROPOSED FOR THIS CONTRACT

(Complete one Section E for each key person.)

12. NAME	13. ROLE IN THIS CONTRACT	14. YEARS EXPERIENCE a. TOTAL	b. WITH CURRENT FIRM
Doug Turley	Engineering VP	35	28

15. FIRM NAME AND LOCATION *(City and State)*

MacDonald-Miller Facility Solutions — Seattle, WA

16. EDUCATION *(DEGREE AND SPECIALIZATION)*	17. CURRENT PROFESSIONAL REGISTRATION *(STATE AND DISCIPLINE)*
University of Washington FE Exam #21790	Professional Engineering License by Exam#36162 in WA, AZ, OR, HI

18. OTHER PROFESSIONAL QUALIFICATIONS *(Publications, Organizations, Training, Awards, etc.)*

19. RELEVANT PROJECTS

a.

(1) TITLE AND LOCATION *(City and State)*: Microsoft TI at Lincoln Square — Bellevue, WA

(2) YEAR COMPLETED — PROFESSIONAL SERVICES: 2009 — CONSTRUCTION *(If applicable)*:

(3) BRIEF DESCRIPTION *(Brief scope, size, cost, etc.)* AND SPECIFIC ROLE — ✓ Check if project performed with current firm

15 floor, 300,000 sqft., LEED CI, MacDonald-Miller provided enhanced commissioning & controls.

b.

(1) TITLE AND LOCATION *(City and State)*: Redmond City Hall — Redmond, WA

(2) YEAR COMPLETED — PROFESSIONAL SERVICES: 2009 — CONSTRUCTION *(If applicable)*:

(3) BRIEF DESCRIPTION *(Brief scope, size, cost, etc.)* AND SPECIFIC ROLE — ✓ Check if project performed with current firm

125,000 sqft, LEED NC Silver, chilled water with hydronic heat.

c.

(1) TITLE AND LOCATION *(City and State)*: Microsoft Building 88 — Redmond, WA

(2) YEAR COMPLETED — PROFESSIONAL SERVICES: 2010 — CONSTRUCTION *(If applicable)*:

(3) BRIEF DESCRIPTION *(Brief scope, size, cost, etc.)* AND SPECIFIC ROLE — ✓ Check if project performed with current firm

250,000 sqft., Lean Last Planner methos was used internally for this fast track project.

d.

(1) TITLE AND LOCATION *(City and State)*: King County Goat Hill Office Building — Seattle, WA

(2) YEAR COMPLETED — PROFESSIONAL SERVICES: 2010 — CONSTRUCTION *(If applicable)*:

(3) BRIEF DESCRIPTION *(Brief scope, size, cost, etc.)* AND SPECIFIC ROLE — ✓ Check if project performed with current firm

296,000 sqft. 13 story, storm water filtration vault, (2) 1500-ton rain water storage tank for irrigation, over 40% domestic water savings.

e.

(1) TITLE AND LOCATION *(City and State)*: Navy Bachelor Enlisted Quarters

(2) YEAR COMPLETED — PROFESSIONAL SERVICES: — CONSTRUCTION *(If applicable)*:

(3) BRIEF DESCRIPTION *(Brief scope, size, cost, etc.)* AND SPECIFIC ROLE — ✓ Check if project performed with current firm

LEED NC Silver, CCASS oustanding rating, AGC 2010 Build Washington Award for Public Buildings over $5 million, DBIA National Design-Build Excellence Award for Public Sector Projects over $50 million.

E. RESUMES OF KEY PERSONNEL PROPOSED FOR THIS CONTRACT

(Complete one Section E for each key person.)

12. NAME	13. ROLE IN THIS CONTRACT	14. YEARS EXPERIENCE	
		a. TOTAL	b. WITH CURRENT FIRM
Dave Gehman	Controls Engineer	23	

15. FIRM NAME AND LOCATION *(City and State)*

MacDonald-Miller Facility Solutions — Seattle, WA

16. EDUCATION *(DEGREE AND SPECIALIZATION)*

Westmont College, Santa Barbara, CA- Bachelor of Arts
N Seattle Community College, Seattle, WA--AAS, HVAC Design

17. CURRENT PROFESSIONAL REGISTRATION *(STATE AND DISCIPLINE)*

18. OTHER PROFESSIONAL QUALIFICATIONS *(Publications, Organizations, Training, Awards, etc.)*

Tridium R2 Certification, Tridium AX Certification, HVAC Electrician Certification

19. RELEVANT PROJECTS

a.

(1) TITLE AND LOCATION *(City and State)*: King County Library System — King County, WA

(2) YEAR COMPLETED — PROFESSIONAL SERVICES: ; CONSTRUCTION *(If applicable)*:

(3) BRIEF DESCRIPTION *(Brief scope, size, cost, etc.)* AND SPECIFIC ROLE

HVAC and lighting controls for 48 branch library system, Honeywell WEBS

✓ Check if project performed with current firm

b.

(1) TITLE AND LOCATION *(City and State)*: Lincoln Square — Bellevue, WA

(2) YEAR COMPLETED — PROFESSIONAL SERVICES: ; CONSTRUCTION *(If applicable)*:

(3) BRIEF DESCRIPTION *(Brief scope, size, cost, etc.)* AND SPECIFIC ROLE

Large mixed-use multi-block complex, Siemens Talon

✓ Check if project performed with current firm

c.

(1) TITLE AND LOCATION *(City and State)*: West 8th — Seattle, WA

(2) YEAR COMPLETED — PROFESSIONAL SERVICES: ; CONSTRUCTION *(If applicable)*:

(3) BRIEF DESCRIPTION *(Brief scope, size, cost, etc.)* AND SPECIFIC ROLE

28-story office and retail building, Siemens Talon

✓ Check if project performed with current firm

d.

(1) TITLE AND LOCATION *(City and State)*: Portland Community College — Portland, WA

(2) YEAR COMPLETED — PROFESSIONAL SERVICES: ; CONSTRUCTION *(If applicable)*:

(3) BRIEF DESCRIPTION *(Brief scope, size, cost, etc.)* AND SPECIFIC ROLE

6 campuses, 28 building complete DDC retrofit to Honeywell WEBS (Spyder) controls

✓ Check if project performed with current firm

e.

(1) TITLE AND LOCATION *(City and State)*: Washington Athletic Club — Seattle, WA

(2) YEAR COMPLETED — PROFESSIONAL SERVICES: 2012; CONSTRUCTION *(If applicable)*:

(3) BRIEF DESCRIPTION *(Brief scope, size, cost, etc.)* AND SPECIFIC ROLE

Energy upgrades including HVAC controls, kitchen ventilation and insulation.

✓ Check if project performed with current firm

F. EXAMPLE PROJECTS WHICH BEST ILLUSTRATE PROPOSED TEAM'S QUALIFICATIONS FOR THIS CONTRACT

(Present as many projects as requested by the agency, or 10 projects, if not specified. Complete one Section F for each project.)

20. EXAMPLE PROJECT KEY NUMBER: 1

21. TITLE AND LOCATION *(City and State)*		22. YEAR COMPLETED	
		PROFESSIONAL SERVICES	CONSTRUCTION *(If applicable)*
Washington Athletic Club	Seattle, WA	2012	

23. PROJECT OWNER'S INFORMATION

a. PROJECT OWNER	b. POINT OF CONTACT NAME	c. POINT OF CONTACT TELEPHONE NUMBER
Washington Athletic Club	Dennis Williams	206-464-4633

24. BRIEF DESCRIPTION OF PROJECT AND RELEVANCE TO THIS CONTRACT *(Include scope, size, and cost)*

The Washington Athletic Club, located in downtown Seattle, Washington was built in 1930 and expanded in 1955 and 1969. The 21 story 310,000 square foot steel and masonry structure contains 113 hotel guest rooms and 5 floors of fitness amenities, with support areas that operate 24/7. The project included replacing and integrating a legacy control system with a new BACnet Building Automation System (BAS), conversion of three-way, constant volume chilled water system to a load-based, variable volume system, replacement of pneumatic actuation with electric, load-based kitchen ventilation controls and BAS programming to optimize energy performance.

First year energy savings projections are on target with engineered estimates which will result in a 29.1% reduction in combined electricity and steam consumption. The carbon equivalent reduction of the consumption savings is 1,058 metric tons per year or 190 cars. Energy savings per square foot is $0.75. The projected energy savings will increase the asset value of the property by an estimated $3,913,574 at a capitalization rate of 8.

25. FIRMS FROM SECTION C INVOLVED WITH THIS PROJECT

	(1) FIRM NAME	(2) FIRM LOCATION *(City and State)*	(3) ROLE
a.	MacDonald-Miller Facility Solutions	Seattle, WA	Performance Contractor and Energy Services Provider
b.			
c.			
d.			
e.			
f.			

F. EXAMPLE PROJECTS WHICH BEST ILLUSTRATE PROPOSED TEAM'S QUALIFICATIONS FOR THIS CONTRACT

(Present as many projects as requested by the agency, or 10 projects, if not specified. Complete one Section F for each project.)

20. EXAMPLE PROJECT KEY NUMBER: 2

21. TITLE AND LOCATION *(City and State)*		22. YEAR COMPLETED	
		PROFESSIONAL SERVICES	CONSTRUCTION *(If applicable)*
Federal Way City Hall	Federal Way, WA	2012	

23. PROJECT OWNER'S INFORMATION

a. PROJECT OWNER	b. POINT OF CONTACT NAME	c. POINT OF CONTACT TELEPHONE NUMBER
City of Federal Way	Steve Ikerd	253-835-6911

24. BRIEF DESCRIPTION OF PROJECT AND RELEVANCE TO THIS CONTRACT *(Include scope, size, and cost)*

This building is an Office Building covering 89,100 square feet containing the Federal Way City Hall Administration, 911 Call Center, Council Chambers, Department of Planning, Police Headquarters. The scope of the project included replacement of the two main rooftop air conditioning units, an HVAC controls front end integration project including partial VAV controller replacement and enhanced, load-based control sequence programming.

First year cost savings exceeded estimates by 27.6%. Equipment replacement, controls and performance management efforts have resulted in an increase in the Energy Star Rating (ESR) of 13 points to its current ESR of 83. Overall energy consumption is down 17.5% which is equivalent to a reduction in annual energy spend of $0.34 per square foot. Annual equivalent carbon reduction is 220 metric tons.

25. FIRMS FROM SECTION C INVOLVED WITH THIS PROJECT

	(1) FIRM NAME	(2) FIRM LOCATION *(City and State)*	(3) ROLE
a.	MacDonald-Miller Facility Solutions	Seattle, WA	Performance Contractor and Energy Services Provider
b.			
c.			
d.			
e.			
f.			

F. EXAMPLE PROJECTS WHICH BEST ILLUSTRATE PROPOSED TEAM'S QUALIFICATIONS FOR THIS CONTRACT

(Present as many projects as requested by the agency, or 10 projects, if not specified. Complete one Section F for each project.)

20. EXAMPLE PROJECT KEY NUMBER: 3

21. TITLE AND LOCATION *(City and State)*		22. YEAR COMPLETED	
		PROFESSIONAL SERVICES	CONSTRUCTION *(If applicable)*
City of Bellevue, City Hall	Bellevue, WA	2011	

23. PROJECT OWNER'S INFORMATION

a. PROJECT OWNER	b. POINT OF CONTACT NAME	c. POINT OF CONTACT TELEPHONE NUMBER
City of Bellevue Hall	Emma Johnson	425-452-5246

24. BRIEF DESCRIPTION OF PROJECT AND RELEVANCE TO THIS CONTRACT *(Include scope, size, and cost)*

Bellevue City Hall is a 391,839 square foot Facility originally built in 1982. The Facility currently supports the City of Bellevue's City Administration, Regional 911 Call Center, Council Chambers, Department of Planning and Police Headquarters. The utility conservation project included the installation of 234 garage and stairwell LED lighting fixtures with occupancy sensors, building automation system hardware upgrades, commissioning of load-based building automation programming strategies and performance management services to deliver and validate the guaranteed financial results.

The first year savings exceeded the engineered estimates by 25%. Performance management efforts have resulted in an increase in the Energy Star Rating (ESR) of 10 points which is currently at an ESR of 97. The projected five year Return on Investment (ROI) is 28.2%. Since August 2011, overall energy consumption is down 12.5% which is equivalent to a decrease in annual energy spend of $0.13 per square foot. Annual equivalent carbon reduction is 425 metric tons.

25. FIRMS FROM SECTION C INVOLVED WITH THIS PROJECT

	(1) FIRM NAME	(2) FIRM LOCATION *(City and State)*	(3) ROLE
a.	MacDonald-Miller Facility Solutions	Seattle, WA	Performance Contractor & Energy Services Provider
b.			
c.			
d.			
e.			
f.			

F. EXAMPLE PROJECTS WHICH BEST ILLUSTRATE PROPOSED TEAM'S QUALIFICATIONS FOR THIS CONTRACT

(Present as many projects as requested by the agency, or 10 projects, if not specified. Complete one Section F for each project.)

20. EXAMPLE PROJECT KEY NUMBER: 4

21. TITLE AND LOCATION *(City and State)*		22. YEAR COMPLETED	
		PROFESSIONAL SERVICES	CONSTRUCTION *(If applicable)*
Bellevue Regional Library	Bellevue, WA	2007	

23. PROJECT OWNER'S INFORMATION

a. PROJECT OWNER	b. POINT OF CONTACT NAME	c. POINT OF CONTACT TELEPHONE NUMBER
King County Library System	Jim Worsdale	425.369.3308

24. BRIEF DESCRIPTION OF PROJECT AND RELEVANCE TO THIS CONTRACT *(Include scope, size, and cost)*

The Bellevue Regional Library is 80,000 square foot building that was built in 1992. The building uses central cooling and heating plants with distributed Air Handling Units. The scope of this project included benchmarking the building, performing an Energy audit and utilizing objective driven commissioning of building systems, and performance management. System efficiency is continually managed via a formal Performance Management Program to insure persistence in savings. The project was completed on time in 2007. The Bellevue Regional Library has reduced its energy costs .30 cents per square foot. The objective-driven commissioning of the building systems reduced the energy costs by 20% and resulted in a 2.2 year payback. Also, comfort complaints have decreased from 50 per year to fewer than 5 per year. In addition to the energy related work, MMFS has completed numerous jobs for not only Bellevue Regional library but for other King County Library branches as well. Other projects include Test Air and Balance, commissioning, retro-commissioning, Controls integrations, and lighting upgrades. MacMiller also has an HVAC service agreement and and a Building Performance contract. with Bellevue regional library

25. FIRMS FROM SECTION C INVOLVED WITH THIS PROJECT

	(1) FIRM NAME	(2) FIRM LOCATION *(City and State)*	(3) ROLE
a.	MacDonald-Miller Facility Solutions	Seattle, WA	Commissioning agent, HVAC Service provider, Energy Efficiency Service provider.
b.			
c.			
d.			
e.			
f.			

F. EXAMPLE PROJECTS WHICH BEST ILLUSTRATE PROPOSED TEAM'S QUALIFICATIONS FOR THIS CONTRACT

(Present as many projects as requested by the agency, or 10 projects, if not specified. Complete one Section F for each project.)

20. EXAMPLE PROJECT KEY NUMBER: 5

21. TITLE AND LOCATION *(City and State)*		22. YEAR COMPLETED	
		PROFESSIONAL SERVICES	CONSTRUCTION *(If applicable)*
Key Center	Bellevue, WA	2009	

23. PROJECT OWNER'S INFORMATION

a. PROJECT OWNER	b. POINT OF CONTACT NAME	c. POINT OF CONTACT TELEPHONE NUMBER
Kilroy	Darrell Bell	425.646.6251

24. BRIEF DESCRIPTION OF PROJECT AND RELEVANCE TO THIS CONTRACT *(Include scope, size, and cost)*

Key Center Bellevue is a 477,899 rentable square footage Class A office tower. It includes 22 stories and 800 underground parking spaces and was built in 2000. The building has a built-up rooftop system with air cooled central cooling plant and terminal FPVAV with electric heat. The first portion of the project included the original construction of the building with a cost of $6,516,976. MacDonald Miller designed and installed the mechanical, plumbing and control work (including the high-rise life safety smoke controls). The second portion of the work MMFS performed was energy efficiency driven. The scope of this project included an energy audit, HVAC retro-commissioning and building performance management. System efficiency is continually managed via a formal Performance Management program to insure persistence in savings. The project is still ongoing. Objective driven commissioning of the building systems has reduced the energy cost in the first months by over $40,000.00. Cost avoidance since June 2008 is $112,280.00. The Energy Star rating increased by 5 points and the Carbon reduction is 291.1 tons. The energy consumption is down 12% compared to the same period last year.

25. FIRMS FROM SECTION C INVOLVED WITH THIS PROJECT

	(1) FIRM NAME	(2) FIRM LOCATION *(City and State)*	(3) ROLE
a.	MacDonald-Miller Facility Solutions	Seattle, Wa	Mechanical Contractor, Energy Effeciency Service Provider
b.	JA Energy Services	Seabeck, WA	Energy Analysis
c.			
d.			
e.			
f.			

F. EXAMPLE PROJECTS WHICH BEST ILLUSTRATE PROPOSED TEAM'S QUALIFICATIONS FOR THIS CONTRACT

(Present as many projects as requested by the agency, or 10 projects, if not specified. Complete one Section F for each project.)

20. EXAMPLE PROJECT KEY NUMBER: 6

21. TITLE AND LOCATION *(City and State)*		22. YEAR COMPLETED	
		PROFESSIONAL SERVICES	CONSTRUCTION *(If applicable)*
The Bellevue Collection	Bellevue, WA	2011	

23. PROJECT OWNER'S INFORMATION

a. PROJECT OWNER	b. POINT OF CONTACT NAME	c. POINT OF CONTACT TELEPHONE NUMBER
Kemper Development	Dave Nieman	425-460-5710

24. BRIEF DESCRIPTION OF PROJECT AND RELEVANCE TO THIS CONTRACT *(Include scope, size, and cost)*

The Bellevue Collection is a collection of Retail, Office Hotel and Residential properties operated by Kemper Development. Properties include Bellevue Square, Lincoln Square and Bellevue Place. The Bellevue Collection has a wide array of over 250 of the finest stores, including fashion and accessories, home furnishings and electronics, personal care and gifts. You'll find 19 sit-down restaurants with award winning cuisine, lounges and happy hours, and 19 cafes and specialty food shops. A 16-screen premier cinema with IMAX, interactive bowling lounge, a billiards lounge and comedy club. We are also home to two, 4-diamond hotels; The Westin Bellevue and The Hyatt Regency Bellevue. Energy Conservation Measures completed and proposed include replacing existing obsolete DDC system infrastructure with the TRIDIUM AX system providing an IT centric platform which will standardize the KDC portfolio around a truly vendor and product neutral open system architecture. Control upgrade from R2 to AX includes new Honeywell WEB 600 AX Controllers with Open License, WEB Memory Expansion, Embedded Workbench, LON Driver and LON Card Communication Bundle and WEB power supply. These proposed ECM's are estimated to result in projected energy savings between 10%-15% annually. Over 1.6 million dollars of energy conservation measure upgrades have been completed and proposed.

25. FIRMS FROM SECTION C INVOLVED WITH THIS PROJECT

	(1) FIRM NAME	(2) FIRM LOCATION *(City and State)*	(3) ROLE
a.	MacDonald-Miller Facility Solutions	Seattle, WA	Performance Contractor and Energy Services Provider
b.			
c.			
d.			
e.			
f.			

F. EXAMPLE PROJECTS WHICH BEST ILLUSTRATE PROPOSED TEAM'S QUALIFICATIONS FOR THIS CONTRACT

(Present as many projects as requested by the agency, or 10 projects, if not specified. Complete one Section F for each project.)

20. EXAMPLE PROJECT KEY NUMBER: 7

21. TITLE AND LOCATION *(City and State)*		22. YEAR COMPLETED	
		PROFESSIONAL SERVICES	CONSTRUCTION *(If applicable)*
MultiCare Tacoma General Boiler Plant	Tacoma, WA	2012	

23. PROJECT OWNER'S INFORMATION

a. PROJECT OWNER	b. POINT OF CONTACT NAME	c. POINT OF CONTACT TELEPHONE NUMBER
Multicare	Art Perez	252-403-1246

24. BRIEF DESCRIPTION OF PROJECT AND RELEVANCE TO THIS CONTRACT *(Include scope, size, and cost)*

Opened in March 2009, Tacoma General Hospital's Boiler Plant provides the hospital and children's hospital with sterilization, heat, energy,oxygen supply needs, and furnishes backup power in the event of an emergency. Three boilers, fueled by natural gas, are housed in this facility. Energy Conservation Measure consists of replacement of the 3 main plant boilers including: Replacement of the boiler burners including Selective Catalytic Converters, Control Panels are an Autoflame, Mk 7 Upgrade and MK 7 EGA, Transitional ductwork and upward facing elbows to connect combustion air fans to burner inlets, UL recognized motors supplied with AV mountsFGR/combustion air mixing silencer assemblies12” FGR valves supplied for FGR control, Large servo motors for FGR control, Air balancing dampers and servo motors, Duct between stack and blower motors, Oil pump sets for supply to the burners. This installation will allow the boilers to run with a burner that will operate at the highest possible combustion efficiency and still operate well under the proposed Puget Sound Air Quality Agency, NOC Permit that your facility operates under. Compared to a water tube boiler with an Ultra Low NOx burner the savings alone based on fuel is approximately $65,323.87 per year. Total cost and in progress for all 3 main boilers is $2,792,753.

25. FIRMS FROM SECTION C INVOLVED WITH THIS PROJECT

	(1) FIRM NAME	(2) FIRM LOCATION *(City and State)*	(3) ROLE
a.	MacDonald-Miller Facility Solutions	Seattle, WA	Performance Contractor and Energy Services Provider
b.			
c.			
d.			
e.			
f.			

F. EXAMPLE PROJECTS WHICH BEST ILLUSTRATE PROPOSED TEAM'S QUALIFICATIONS FOR THIS CONTRACT

(Present as many projects as requested by the agency, or 10 projects, if not specified. Complete one Section F for each project.)

20. EXAMPLE PROJECT KEY NUMBER: 8

21. TITLE AND LOCATION *(City and State)*		22. YEAR COMPLETED	
		PROFESSIONAL SERVICES	CONSTRUCTION *(If applicable)*
YMCA of Greater Seattle	Seattle, WA	2012	

23. PROJECT OWNER'S INFORMATION

a. PROJECT OWNER	b. POINT OF CONTACT NAME	c. POINT OF CONTACT TELEPHONE NUMBER
YMCA	Glenn Tsugawa	206-799-9073

24. BRIEF DESCRIPTION OF PROJECT AND RELEVANCE TO THIS CONTRACT *(Include scope, size, and cost)*

Capital and Energy conservation work with the YMCA of Greater Seattle included 6 branches, Auburn, Bellevue, Downtown, East Madison, Northshore, and West Seattle. These Family Health Club facilities range in size and type. The Auburn branch is a 45,000 sqft. built in 2004, the Bellevue branch is 43,0000 sqft. built in 2000, The Downtown branch is a 110,000 sqft. upgraded in 2000. The East Madison location is a 25,870 sqft. built in 1993, The Northshore Branch is a 39,000 sqft. built in 1991, and the West Seattle Branch which was built in 1984.

Energy conservation measures included HVAC Equipment Replacement, Web Based Thermostat Systems, Economizer System Upgrades, Boiler Upgrades, Lighting Upgrades, and Water Conservation Upgrades. Total of all projects: $2.4 Million dollars.

These proposed ECM's for all six YMCA locations combined results in an estimated energy savings of 1,129,104 kWh/yr, 37,387 therms/yr, 316 M# Steam/yr and over 6 million gallons of water/yr resulting in a calculated avoided energy cost of $238,931 annually. The projected Puget Sound Energy rebate for these projects is $45,000.

25. FIRMS FROM SECTION C INVOLVED WITH THIS PROJECT

	(1) FIRM NAME	(2) FIRM LOCATION *(City and State)*	(3) ROLE
a.	MacDonald-Miller Facility Solutions	Seattle, WA	Performance Contractor & Energy Services Provider
b.			
c.			
d.			
e.			
f.			

F. EXAMPLE PROJECTS WHICH BEST ILLUSTRATE PROPOSED TEAM'S QUALIFICATIONS FOR THIS CONTRACT *(Present as many projects as requested by the agency, or 10 projects, if not specified. Complete one Section F for each project.)*	20. EXAMPLE PROJECT KEY NUMBER 9

21. TITLE AND LOCATION *(City and State)*		22. YEAR COMPLETED	
		PROFESSIONAL SERVICES	CONSTRUCTION *(If applicable)*
Compass Health Bailey Building	Everett, WA	2011	2012

23. PROJECT OWNER'S INFORMATION

a. PROJECT OWNER	b. POINT OF CONTACT NAME	c. POINT OF CONTACT TELEPHONE NUMBER
Compass Health	Jean Constanti-Oehler	425-349-8399

24. BRIEF DESCRIPTION OF PROJECT AND RELEVANCE TO THIS CONTRACT *(Include scope, size, and cost)*

The Bailey Building was chosen by Compass Health for a Preliminary and Investment Grade Audit to satisfy requirements to receive low interest financing through the Energy Trust fund at Washington State Housing Finance Commission. The Bailey is their main facility seeing Mental Health and other patients, they felt the money spent will both help reduce operating expenses and show support to the community, employees, and their clientele. The audit found conservation measures that would save Compass Health $28,000 per year in annual energy and water savings. The conservation measures were: Boiler plan replacement, lighting retrofit throughout the whole facility, insulating the boiler room water piping, toilet and sink retrofits. Project difficulties included scheduling with highly variable schedules during operating hours. In certain locations of the hospital continual watch of tools and patients were necessary for safety.

Project cost $538,000 with financing fees and included $44,000 of utility grants and guaranteed savings amount of $23,000 annually.

25. FIRMS FROM SECTION C INVOLVED WITH THIS PROJECT

	(1) FIRM NAME	(2) FIRM LOCATION *(City and State)*	(3) ROLE
a.	MacDonald-Miller Facility Solutions	Seattle, WA	Energy Services Provider, General & Mechanical Contractor
b.	Seahurst Electric	Everett, WA	Lighting Retrofit Contractor
c.	Hudson Bay Insulation	Seattle, WA	Insulation Upgrades
d.	Pioneer Construction Services	Mill Creek, WA	Bathroom remodel, tile, wall, concrete
e.			
f.			

F. EXAMPLE PROJECTS WHICH BEST ILLUSTRATE PROPOSED TEAM'S QUALIFICATIONS FOR THIS CONTRACT *(Present as many projects as requested by the agency, or 10 projects, if not specified. Complete one Section F for each project.)*	20. EXAMPLE PROJECT KEY NUMBER 10

21. TITLE AND LOCATION *(City and State)*		22. YEAR COMPLETED	
		PROFESSIONAL SERVICES	CONSTRUCTION *(If applicable)*
Highline Community College	Des Moines, WA	2012	

23. PROJECT OWNER'S INFORMATION

a. PROJECT OWNER	b. POINT OF CONTACT NAME	c. POINT OF CONTACT TELEPHONE NUMBER
Highline Community College	Barry Holldorf	206-878-3710

24. BRIEF DESCRIPTION OF PROJECT AND RELEVANCE TO THIS CONTRACT *(Include scope, size, and cost)*

Highline Community College was founded in 1961 and was the first community college in King County. The main campus was built in 1964 with additional buildings added in following years to meet student and technology needs. Currently the college serves 18,900 students.

The Highline Community College Project is being managed through the Washington State Department of Enterprise Services Energy Program.

Proposed energy conservation measures (ECM) include: Upgrade the DDC Backbone by replacing the existing global controllers with 12 Honeywell WEBs Global Controllers. A new PC workstation loaded with the Honeywell AX Workstation software utilizing a custom graphical interface package will be integrated to the existing field controllers.

MacDonald-Miller Facility Solutions is replacing the aging controls system in boilers #1 & #2. The installation of this state of the art boiler control system, Autoflame Mk7 control system with Mk7 E.G.A. (exhaust gas analyzer), will result in the ability to monitor the combustion process and precisely optimize it in real-time.

25. FIRMS FROM SECTION C INVOLVED WITH THIS PROJECT

	(1) FIRM NAME	(2) FIRM LOCATION *(City and State)*	(3) ROLE
a.	MacDonald-Miller Facility Solutions	Seattle, WA	Performance Contractor & Energy Services Provider
b.			
c.			
d.			
e.			
f.			